RAM

2014 RAM TRUCK 1500/2500/3500

OWNER'S MANUAL

VEHICLES SOLD IN CANADA

With respect to any Vehicles Sold in Canada, the name Chrysler Group LLC shall be deemed to be deleted and the name Chrysler Canada Inc. used in substitution therefore.

DRIVING AND ALCOHOL

Drunken driving is one of the most frequent causes of accidents.

Your driving ability can be seriously impaired with blood alcohol levels far below the legal minimum. If you are drinking, don't drive. Ride with a designated non-drinking driver, call a cab, a friend, or use public transportation.

WARNING!
Driving after drinking can lead to an accident. Your perceptions are less sharp, your reflexes are slower, and your judgment is impaired when you have been drinking. Never drink and then drive.

This manual illustrates and describes the operation of features and equipment that are either standard or optional on this vehicle. This manual may also include a description of features and equipment that are no longer available or were not ordered on this vehicle. Please disregard any features and equipment described in this manual that are not on this vehicle.

Chrysler Group LLC reserves the right to make changes in design and specifications, and/or make additions to or improvements to its products without imposing any obligation upon itself to install them on products previously manufactured.

Copyright © 2013 Chrysler Group LLC

TABLE OF CONTENTS

SECTION		PAGE
1	INTRODUCTION	3
2	THINGS TO KNOW BEFORE STARTING YOUR VEHICLE	9
3	UNDERSTANDING THE FEATURES OF YOUR VEHICLE	129
4	UNDERSTANDING YOUR INSTRUMENT PANEL	271
5	STARTING AND OPERATING	359
6	WHAT TO DO IN EMERGENCIES	605
7	MAINTAINING YOUR VEHICLE	665
8	MAINTENANCE SCHEDULES	739
9	IF YOU NEED CONSUMER ASSISTANCE	749
10	INDEX	761

INTRODUCTION

CONTENTS

- INTRODUCTION 4
- HOW TO USE THIS MANUAL 4
- WARNINGS AND CAUTIONS 6
- VAN CONVERSIONS/CAMPERS 6
- VEHICLE IDENTIFICATION NUMBER 6
- VEHICLE MODIFICATIONS/ALTERATIONS 7

INTRODUCTION

Congratulations on selecting your new Chrysler Group LLC vehicle. Be assured that it represents precision workmanship, distinctive styling, and high quality - all essentials that are traditional to our vehicles.

This Owner's Manual has been prepared with the assistance of service and engineering specialists to acquaint you with the operation and maintenance of your vehicle. It is supplemented by Warranty Information, and various customer-oriented documents. Please take the time to read these publications carefully. Following the instructions and recommendations in this manual will help assure safe and enjoyable operation of your vehicle.

NOTE: After reviewing the owner information, it should be stored in the vehicle for convenient referencing and remain with the vehicle when sold.

When it comes to service, remember that your authorized dealer knows your vehicle best, has factory-trained technicians and genuine parts, and cares about your satisfaction.

HOW TO USE THIS MANUAL

Consult the Table of Contents to determine which section contains the information you desire.

Since the specification of your vehicle depends on the items of equipment ordered, certain descriptions and illustrations may differ from your vehicle's equipment.

The detailed index at the back of this Owner's Manual contains a complete listing of all subjects.

Consult the following table for a description of the symbols that may be used on your vehicle or throughout this Owner's Manual:

WATER IN FUEL
REAR WINDOW WIPER
WINDSHIELD WIPER INTERMITTENT
EXTERIOR BULB FAILURE
HIGH BEAM
TURN SIGNALS
UPPER AIR OUTLET
HEATED SEAT LOW
DOOR LOCK
ADJUSTABLE PEDALS
ELECTRONIC SPEED CONTROL
ESP BAS
ELECTRONIC STABILITY PROGRAM / BRAKE ASSIST SYSTEM
FUEL
REAR WINDOW INTERMITTENT WIPER
WINDSHIELD WASHER
MASTER LIGHTING SWITCH
LOW BEAM
KEY ACTIVATE (POWER OUTLET)
UPPER AND LOWER AIR OUTLET
HEATED SEAT HIGH
WINDOW LIFT
TIRE PRESSURE MONITOR
HILL DESCENT CONTROL
BRAKE
BRAKE SYSTEM WARNING PARKING BRAKE
FUEL FILL SIDE
REAR WINDOW WASHER
WINDSHIELD WASHER FLUID LEVEL
DOME LIGHT
FRONT FOG LIGHT
HOOD RELEASE
LOWER AIR OUTLET
RECIRCULATION
CONVERTIBLE 4 WINDOW DOWN
ELECTRONIC STABILITY CONTROL
AWD!
ALL WHEEL DRIVE
ABS
FAILURE OF ANTI-LOCK BRAKING SYSTEM
ENGINE OIL
REAR WINDOW DEFROST
WINDSHIELD, ELECTRICALLY HEATED
PARK LIGHTS
REAR FOG LAMP
LIFTGATE RELEASE AND LIFTGATE OPEN
DEFROST AND LOWER AIR OUTLET
VENTILATING FAN
WINDOW LOCK
ELECTRONIC THROTTLE CONTROL
4WD!
FOUR WHEEL DRIVE
BRAKE
BRAKE SYSTEM WARNING PARKING BRAKE
BATTERY CHARGING
HEATED MIRROR
WINDSHIELD DEFROST
INSTRUMENT PANEL ILLUMINATION
SEAT BELT
SLIDING DOOR
TRUNK / DECK RELEASE
AIR CONDITIONING
CHILD SEAT TETHER ANCHOR
VOICE RECOGNITION BUTTON
WARNING
TOW/ HAUL
TOW / HAUL
GLOW PLUG
POWER STEERING FLUID
WINDSHIELD WIPER AND WASHER
SIDE AIRBAG
AIRBAG
SLIDING DOOR
EMERGENCY RELEASE HANDLE
LIGHTER
LOWER ANCHORS AND TETHER FOR CHILDREN (LATCH)
UCONNECT™ BUTTON
HAZARD
4 LOW
FOUR WHEEL DRIVE LOW
MALFUNCTION INDICATOR LIGHT
TRANS OIL TEMP
ENGINE COOLANT TEMPERATURE
SRS AIRBAG
SUPPLEMENTAL RESTRAINT SYSTEM
PASSENGER AIRBAG OFF
DOOR AJAR
CONVERTIBLE TOP DOWN
CONVERTIBLE TOP UP
HORN
SEE OWNER'S MANUAL ISO
A/C PUSH
AIR CONDITIONER
OFF
ELECTRONIC STABILITY CONTROL OFF
010533317

WARNINGS AND CAUTIONS

This Owners Manual contains **WARNINGS** against operating procedures that could result in a collision or bodily injury. It also contains **CAUTIONS** against procedures that could result in damage to your vehicle. If you do not read this entire Owners Manual, you may miss important information. Observe all Warnings and Cautions.

VAN CONVERSIONS/CAMPERS

The New Vehicle Limited Warranty does not apply to body modifications or special equipment installed by van conversion/camper manufacturers/body builders. Refer to the Warranty Information book, Section 2.1.C. Such equipment includes video monitors, VCRs, heaters, stoves, refrigerators, etc. For warranty coverage and service on these items, contact the applicable manufacturer.

Operating instructions for the special equipment installed by the conversion/camper manufacturer should also be supplied with your vehicle. If these instructions are missing, please contact your authorized dealer for assistance in obtaining replacement documents from the applicable manufacturer.

For information on the Body Builders Guide refer to: www.dodgebodybuilder.com. This website contains dimensional and technical specifications for your vehicle. It is intended for Second Stage Manufacturer's technical support. For service issues, contact your authorized dealer.

VEHICLE IDENTIFICATION NUMBER

The Vehicle Identification Number (VIN) is found on the left front corner of the instrument panel, visible through the windshield. This number also appears on the vehicle

frame and underbody as well as the Automobile Information Disclosure Label affixed to a window on your vehicle, the vehicle registration and title.

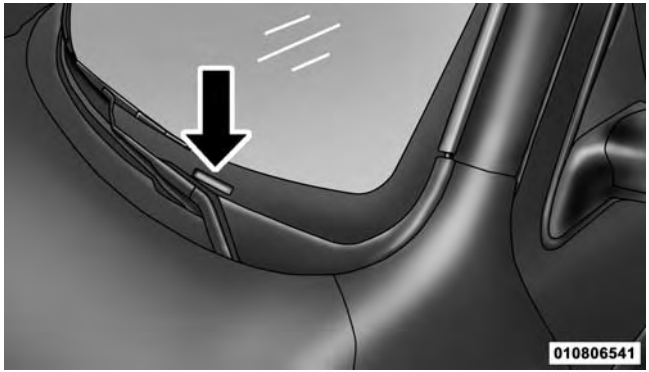

Vehicle Identification Number

NOTE: It is illegal to remove or alter the VIN.

VEHICLE MODIFICATIONS/ALTERATIONS

WARNING!

Any modifications or alterations to this vehicle could seriously affect its roadworthiness and safety and may lead to a collision resulting in serious injury or death.

THINGS TO KNOW BEFORE STARTING YOUR VEHICLE

CONTENTS

- A WORD ABOUT YOUR KEYS 12
  - Ignition Node Module (IGNM) — If Equipped. .12
  - Keyless Ignition Node (KIN) — If Equipped . . .13
  - Key Fob 14
  - Removing Key Fob From Ignition 16
  - Key-In-Ignition Reminder 18
- SENTRY KEY® 18
  - Replacement Keys 19
  - Customer Key Programming 20
  - General Information 20
- VEHICLE SECURITY ALARM 21
  - Rearming Of The System 21
  - To Arm The System. 21
  - To Disarm The System. 21
  - Security System Manual Override. 22
- ILLUMINATED ENTRY 22
- REMOTE KEYLESS ENTRY (RKE) 23
  - Remote Unlock The Doors 25
  - To Lock The Doors 27
  - Sound Horn With Remote Key Lock 27

- Using The Panic Alarm 28
- RKE Air Suspension (Remote Lowering Of The Vehicle) — If Equipped 29
- Programming Additional Transmitters. 29
- Transmitter Battery Replacement 30
- General Information 33

■ REMOTE STARTING SYSTEM — IF EQUIPPED 34

- How To Use Remote Start 34

■ DOOR LOCKS 38

- Manual Door Locks. 38
- Power Door Locks — If Equipped 39
- Child-Protection Door Lock 41

■ KEYLESS ENTER-N-GO™ 42

■ WINDOWS 47

- Power Windows – If Equipped 47
- Wind Buffeting 51

■ OCCUPANT RESTRAINTS 51

- Lap/Shoulder Belts 55
- Lap/Shoulder Belt Untwisting Procedure 63
- Adjustable Upper Shoulder Belt Anchorage . . .63
- Center Lap Belts 64
- Seat Belts In Passenger Seating Positions 65
- Automatic Locking Retractor (ALR) Mode – If Equipped 66
- Energy Management Feature 67

- Seat Belt Pretensioners 67
- Enhanced Seat Belt Use Reminder System (BeltAlert®) 67
- Seat Belts And Pregnant Women 68
- Seat Belt Extender 69
- Supplemental Restraint System (SRS) — Air Bags 69
- Air Bag System Components 71
- Advanced Front Air Bag Features 72
- Air Bag Deployment Sensors And Controls 76
- Event Data Recorder (EDR) 88
- Child Restraints 89

■ ENGINE BREAK-IN RECOMMENDATIONS . . .123

■ SAFETY TIPS 124
- Transporting Passengers 124
- Exhaust Gas 125
- Safety Checks You Should Make Inside The Vehicle 126
- Periodic Safety Checks You Should Make Outside The Vehicle 128

A WORD ABOUT YOUR KEYS

Your vehicle uses either a key start ignition system or keyless ignition system. The key start ignition system consists of a either a bladed key with an immobilizer chip in it, or a Key Fob with Remote Keyless Entry (RKE) transmitter and an Ignition Node Module (IGNM). The keyless ignition system consists of a Key Fob with Remote Keyless Entry (RKE) transmitter and a Keyless Ignition Node (KIN).

Ignition Node Module (IGNM) — If Equipped

The Ignition Node Module (IGNM) operates similar to an ignition switch. It has four operating positions, three with detents and one that is spring-loaded. The detent positions are OFF, ACC, and ON/RUN. The START position is a spring-loaded momentary contact position. When released from the START position, the switch automatically returns to the ON/RUN position.

NOTE: If your vehicle is equipped with Keyless Enter-N-Go™, the Electronic Vehicle Information Center (EVIC) will display the ignition switch position (OFF/ACC/RUN). Refer to “Electronic Vehicle Information Center (EVIC) — If Equipped” in “Understanding Your Instrument Panel” for further information.

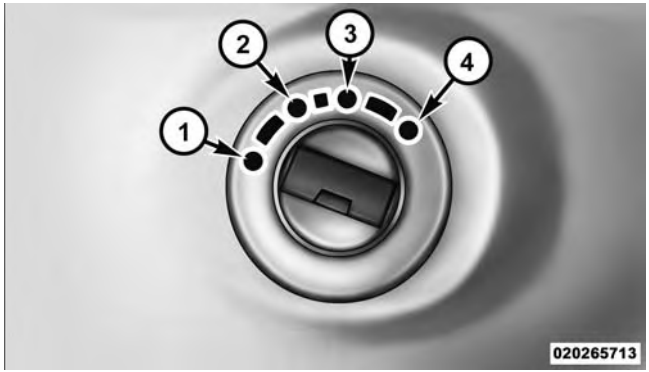

1 — OFF
2 — ACC (ACCESSORY)
3 — ON/RUN
4 — START

Keyless Ignition Node (KIN) — If Equipped

This feature allows the driver to operate the ignition switch with the push of a button, as long as the Remote Keyless Entry (RKE) transmitter is in the passenger compartment.

The Keyless Ignition Node (KIN) has four operating positions, three of which are labeled and will illuminate when in position. The three positions are OFF, ACC, and ON/RUN. The fourth position is START, during start RUN will illuminate.

NOTE: In case the ignition switch does not change with the push of a button, the RKE transmitter (Key Fob) may have a low or dead battery. In this situation a back up method can be used to operate the ignition switch. Put the nose side (side opposite of the emergency key) of the Key Fob against the ENGINE START/STOP button and push to operate the ignition switch.

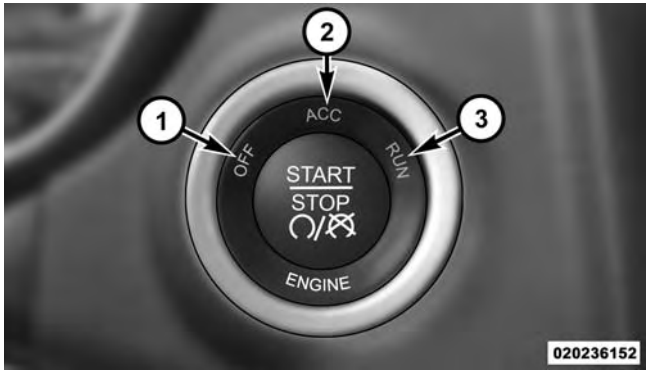

Keyless Ignition Node (KIN)

1 — OFF
2 — ACC (ACCESSORY)
3 — ON/RUN

NOTE: For further information, refer to Starting Procedures in "Starting And Operating".

Key Fob

The Key Fob operates the ignition switch. Insert the square end of the key fob into the ignition switch located on the instrument panel and rotate to the desired position. It also contains the Remote Keyless Entry (RKE) transmitter and an emergency key, which stores in the rear of the Key Fob.

The emergency key allows for entry into the vehicle should the battery in the vehicle or the RKE transmitter go dead. You can keep the emergency key with you when valet parking.

To remove the emergency key, slide the mechanical latch at the top of the Key Fob sideways with your thumb and then pull the key out with your other hand.

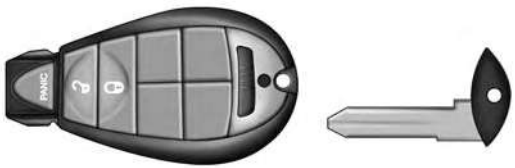

020207436

Emergency Key Removal (IGNM)

0202005021

Emergency Key Removal Keyless Enter-N-Go™ Fob (KIN)

NOTE: You can insert the double-sided emergency key into the lock cylinder with either side up.

Removing Key Fob From Ignition

Place the shift lever in PARK (if equipped with an automatic transmission). Turn the Key Fob to the OFF position and then remove the Key Fob.

NOTE:

- For vehicles not equipped with the Electronic Vehicle Information Center (EVIC), the power window switches, radio, power sunroof (if equipped), and power outlets will remain active for 45 seconds after the ignition switch is turned to the OFF position. Opening either front door will cancel this feature.
- For vehicles equipped with the EVIC, the power window switches, radio, power sunroof (if equipped), and power outlets will remain active for up to 10 minutes after the ignition switch is turned to the OFF position. Opening either front door will cancel this feature. The time for this feature is programmable. Refer to "Electronic Vehicle Information Center (EVIC)/Personal Settings (Customer-Programmable Features)" in "Understanding Your Instrument Panel" for further information.

CAUTION!

- **If your vehicle battery becomes low or dead, your Key Fob will become locked in the ignition.**
- **Do not attempt to remove the Key Fob while in this condition, damage could occur to the Key Fob or ignition module. Only remove the emergency key for locking and unlocking the doors.**
- **Leave the Key Fob in the ignition and either:**
  - **Jump Start the vehicle.**
  - **Charge the battery.**

WARNING!

- **Before exiting a vehicle, always apply the parking brake, shift the transmission into PARK, and push ignition button to place ignition in OFF position. When leaving the vehicle, always lock your vehicle.**
- **Never leave children alone in a vehicle, or with access to an unlocked vehicle.**
- **Allowing children to be in a vehicle unattended is dangerous for a number of reasons. A child or others could be seriously or fatally injured. Children should be warned not to touch the parking brake, brake pedal or the shift lever.**

(Continued)

WARNING! ***(Continued)***

- **Do not leave the Key Fob in or near the vehicle, or in a location accessible to children, and do not leave the ignition of a vehicle equipped with Keyless Enter-N-Go™ in the ACC or ON/RUN mode. A child could operate power windows, other controls, or move the vehicle.**
- **Do not leave children or animals inside parked vehicles in hot weather. Interior heat build-up may cause serious injury or death.**

CAUTION!

An unlocked car is an invitation to thieves. Always remove the key from the ignition and lock all doors when leaving the vehicle unattended.

Key-In-Ignition Reminder

Opening the driver's door when the Key Fob is in the ignition and the ignition switch position is OFF or ACC, a chime will sound to remind you to remove the Key Fob.

NOTE:

- "Keyed" Ignition systems will chime in OFF or ACC when the driver door is open.
- "Keyless" Ignition systems will chime in ACC or RUN when the driver door is open.
- If equipped with Electronic Vehicle Information Center (EVIC) the EVIC will display "Key In Ignition".

SENTRY KEY®

The Sentry Key® Immobilizer System prevents unauthorized vehicle operation by disabling the engine. The system does not need to be armed or activated. Operation is automatic, regardless of whether the vehicle is locked or unlocked.

The system uses a Key Fob with a factory-mated Remote Keyless Entry (RKE) transmitter, a Keyless Ignition Node (KIN) and a RF receiver to prevent unauthorized vehicle operation. Therefore, only Key Fobs that are programmed to the vehicle can be used to start and operate the vehicle. The system will not allow the engine to crank if an invalid Key Fob is used to start and operate the vehicle. The system will shut the engine off in two seconds if an invalid Key Fob is used to start the engine.

NOTE: A Key Fob that has not been programmed is also considered an invalid key.

During normal operation, after turning on the ignition switch, the Vehicle Security Light will turn on for three seconds for a bulb check. If the light remains on after the bulb check, it indicates that there is a problem with the electronics. In addition, if the light begins to flash after the bulb check, it indicates that someone used an invalid Key Fob to try to start the engine. Either of these conditions will result in the engine being shut off after two seconds.

If the Vehicle Security Light turns on during normal vehicle operation (vehicle running for longer than 10 seconds), it indicates that there is a fault in the electronics. Should this occur, have the vehicle serviced as soon as possible by an authorized dealer.

CAUTION!

The Sentry Key® Immobilizer system is not compatible with some after-market remote starting systems. Use of these systems may result in vehicle starting problems and loss of security protection.

All of the Key Fobs provided with your new vehicle have been programmed to the vehicle electronics.

Replacement Keys

NOTE: Only Key Fobs that are programmed to the vehicle electronics can be used to start and operate the vehicle. Once a Key Fob is programmed to a vehicle, it cannot be programmed to any other vehicle.

CAUTION!

- **Always remove the Key Fobs from the vehicle and lock all doors when leaving the vehicle unattended.**
- **For vehicles equipped with Keyless Enter-N-Go™, always remember to place the ignition in the OFF position.**

At the time of purchase, the original owner is provided with a four-digit Personal Identification Number (PIN). Keep the PIN in a secure location. This number is required for authorized dealer replacement of Key Fobs. Duplication of Key Fobs may be performed at an authorized dealer, this procedure consists of programming a blank Key Fob to the vehicle electronics. A blank Key Fob is one that has never been programmed.

NOTE: When having the Sentry Key® Immobilizer System serviced, bring all vehicle keys with you to an authorized dealer.

Customer Key Programming

Programming Key Fobs or RKE transmitters may be performed at an authorized dealer.

General Information

The Sentry Key® system complies with FCC rules Part 15 and with RSS-210 of Industry Canada. Operation is subject to the following conditions:

- This device may not cause harmful interference.
- This device must accept any interference that may be received, including interference that may cause undesired operation.

VEHICLE SECURITY ALARM

The Vehicle Security Alarm monitors the vehicle doors and ignition for unauthorized operation. When the Vehicle Security Alarm is activated, interior switches for door locks are disabled. The system provides both audible and visible signals, for the first three minutes the horn will sound and the headlights will turn on, the park lamps and/or turn signals will flash and Vehicle Security Light will flash repeatedly. For an additional 15 minutes only, the headlights will turn on, the park lamps and/or turn signals and Vehicle Security Light will flash.

Rearming Of The System

The Vehicle Security Alarm will rearm itself after the 15 additional minutes of headlights and Vehicle Security Light flashing, if the system has not been disabled. If the condition which initiated the alarm is still present, the system will ignore that condition and monitor the remaining doors and ignition.

To Arm The System

The Vehicle Security Alarm will set when you use the power door locks, or use the Remote Keyless Entry (RKE) transmitter to lock the doors. After all the doors are locked and closed, the Vehicle Security Light in the instrument panel cluster will flash rapidly for about 16 seconds to indicate that the alarm is being set. After the alarm is set, the Vehicle Security Light will flash at a slower rate to indicate that the system is armed.

To Disarm The System

Use the RKE transmitter to unlock the door. If something has triggered the Vehicle Security Alarm in your absence, the horn will sound three times when you unlock the doors and the exterior lights will blink three times. Check the vehicle for tampering.

The Vehicle Security Alarm will also disarm if a programmed Sentry Key® is inserted into the ignition switch. To exit the alarming mode, press the RKE transmitter UNLOCK button, or insert a programmed Sentry Key® into the ignition switch.

The Vehicle Security Alarm is designed to protect your vehicle; however, you can create conditions where the system will give you a false alarm. If one of the previously described arming sequences has occurred, the Vehicle Security Alarm will arm regardless of whether you are in the vehicle or not. If you remain in the vehicle and open a door, the alarm will sound. If this occurs, disarm the Vehicle Security Alarm.

Security System Manual Override

The Vehicle Security Alarm will not arm if you lock the doors using the manual door lock plunger.

ILLUMINATED ENTRY

The courtesy lights will turn on when you use the Remote Keyless Entry (RKE) transmitter to unlock the doors or open any door.

This feature also turns on the approach lighting in the outside mirrors (if equipped). Refer to “Mirrors” in “Understanding The Features Of Your Vehicle” for further information.

The lights will fade to off after approximately 30 seconds, or they will immediately fade to off once the ignition switch is turned to ON/RUN from the OFF position.

NOTE:

- The front courtesy overhead console and door courtesy lights will not turn off if the dimmer control is in the "Dome ON" position (rotate horizontal thumb wheel on the bottom of the switch to the far right detent position).
- The illuminated entry system will not operate if the dimmer control is in the "Dome OFF" position (rotate horizontal thumb wheel on the bottom of the switch to the far left detent position).

REMOTE KEYLESS ENTRY (RKE)

The RKE system allows you to lock or unlock all doors, tailgate, and the RamBox® (if equipped) as well as activate the Panic Alarm from distances up to approximately 66 ft (20 m) using a hand-held radio transmitter with integrated key. The transmitter does not need to be pointed at the vehicle to activate the system. Press and release the LOCK button on the RKE transmitter to lock all doors, the tailgate and the RamBox® (if equipped). The turn signal lights will flash and the horn will chirp to acknowledge the signal.

NOTE: Inserting the Key Fob with RKE transmitter into the ignition switch disables the system from responding to any button presses from that RKE transmitter. Driving at speeds 5 mph (8 km/h) and above disables the system from responding to all RKE transmitter buttons for all RKE transmitters.

020207434

Key Fob With Remote Keyless Entry (RKE) Transmitter (IGNM)

0202005004

Key Fob With RKE Transmitter Keyless Enter-N-Go™ Fob (KIN)

Remote Unlock The Doors

Press and release the UNLOCK button on the RKE transmitter once to unlock the driver's door (If EVIC is setup for driver door first, otherwise this will unlock all doors), or press the unlock button twice within five seconds to unlock all doors, the tailgate and the RamBox® (if equipped). The turn signal lights will flash to acknowledge the unlock signal. The illuminated entry system will also turn on.

Remote Key Unlock, Driver Door/All Doors First

This feature lets you program the system to unlock either the driver's door or all doors on the first press of the UNLOCK button on the RKE transmitter. To change the current setting, proceed as follows:

- For vehicles equipped with the EVIC, refer to "Electronic Vehicle Information Center (EVIC)/Customer-Programmable Features (System Setup)" in "Understanding Your Instrument Panel" for further information.
- For vehicles not equipped with the EVIC, perform the following procedure:

1. Press and hold the LOCK button on a programmed RKE transmitter for at least four seconds, but no longer than ten seconds. Then, press and hold the UNLOCK button while still holding the LOCK button.
2. Release both buttons at the same time.
3. Test the feature while outside of the vehicle by pressing the LOCK/UNLOCK buttons on the RKE transmitter with the ignition switch in the OFF position and the key removed.
4. Repeat these steps if you want to return this feature to its previous setting.

NOTE: Pressing the LOCK button on the RKE transmitter while you are inside the vehicle will activate the Vehicle Security Alarm System. Opening a door with the Vehicle Security Alarm System activated will cause the alarm to sound. Press the UNLOCK button to deactivate the Vehicle Security Alarm System.

Flash Lamps With Remote Key Lock

This feature will cause the turn signal lights to flash when the doors are locked or unlocked with the RKE transmitter. This feature can be turned on or turned off. To change the current setting, proceed as follows:

- For vehicles equipped with the EVIC, refer to "Electronic Vehicle Information Center (EVIC)/Customer-Programmable Features (System Setup)" in "Understanding Your Instrument Panel" for further information.
- For vehicles not equipped with the EVIC, perform the following procedure:

1. Press and hold the UNLOCK button on a programmed RKE transmitter for at least four seconds, but no longer than ten seconds. Then, press and hold the LOCK button while still holding the UNLOCK button.
2. Release both buttons at the same time.
3. Test the feature while outside of the vehicle by pressing the LOCK/UNLOCK buttons on the RKE transmitter with the ignition switch in the OFF position and the key removed.
4. Repeat these steps if you want to return this feature to its previous setting.

NOTE: Pressing the LOCK button on the RKE transmitter while you are in the vehicle will activate the Vehicle Security Alarm System. Opening a door with the Vehicle Security Alarm System activated will cause the alarm to sound. Press the UNLOCK button to deactivate the Vehicle Security Alarm System.

To Lock The Doors

Press and release the LOCK button on the RKE transmitter to lock all doors, the tailgate and the RamBox® (if equipped). The turn signal lights will flash and the horn will chirp to acknowledge the signal.

Sound Horn With Remote Key Lock

This feature will cause the horn to chirp when the doors are locked with the RKE transmitter. This feature can be turned on or turned off. To change the current setting, proceed as follows:

- For vehicles equipped with the EVIC, refer to “Electronic Vehicle Information Center (EVIC)/Customer-Programmable Features (System Setup)” in “Understanding Your Instrument Panel” for further information.
- For vehicles not equipped with the EVIC, perform the following procedure:

1. Press the LOCK button on a programmed RKE transmitter for at least four seconds, but no longer than ten seconds. Then, press the PANIC button while still holding the LOCK button.

2. Release both buttons at the same time.
3. Test the feature while outside of the vehicle by pressing the LOCK button on the RKE transmitter with the ignition switch in the OFF position and the key removed.
4. Repeat these steps if you want to return this feature to its previous setting.

NOTE: Pressing the LOCK button on the RKE transmitter while you are in the vehicle will activate the Vehicle Security Alarm System. Opening a door with the Vehicle Security Alarm System activated will cause the alarm to sound. Press the UNLOCK button to deactivate the Vehicle Security Alarm System.

Using The Panic Alarm

To turn the Panic Alarm feature ON or OFF, press and hold the PANIC button on the RKE transmitter for at least one second and release. When the Panic Alarm is on, the headlights will turn on, the park lights will flash, the horn will pulse on and off, and the interior lights will turn on.

The Panic Alarm will stay on for three minutes unless you turn it off by either pressing the PANIC button a second time or drive the vehicle at a speed of 5 mph (8 km/h) or greater.

NOTE:

- The interior lights will turn off if you turn the ignition switch to the ACC or ON/RUN position while the Panic Alarm is activated. However, the exterior lights and horn will remain on.
- You may need to be less than 35 ft (11 m) from the vehicle when using the RKE transmitter to turn off the Panic Alarm due to the radio frequency noises emitted by the system.

RKE Air Suspension (Remote Lowering Of The Vehicle) — If Equipped

For easy entry and loading, your vehicle can be lowered by pressing the Key Fob air suspension lowering button two times. When Remote key FOB lowering is requested, the vehicle will send a series of chirps and flashes to alert the customer that the operation has begun and will continue these alerts until it successfully lowers.

The following conditions must be met for the vehicle to lower remotely:

The vehicle must not already be in Entry/Exit (Park) ride height.

The vehicle battery must be fully charged.

All doors must be closed.

The ignition key must be out of the vehicle.

Cancelling Remote Lowering Vehicle lowering can be cancelled at anytime. When vehicle lowering is cancelled, the vehicle will raise up to the next defined level and lock out the remote lowering feature until the ignition has been cycled ON/OFF.

To cancel vehicle lowering, press the Key Fob air suspension lowering button one time during the lowering process. When vehicle lowering is cancelled the horn will chirp two times and the hazard lights will flash four times. Once raising is completed, the horn will chirp one time.

NOTE: For further information, refer to “Air Suspension System in ”STARTING AND OPERATING”.

Programming Additional Transmitters

If you do not have a programmed RKE transmitter, contact your authorized dealer for details.

Transmitter Battery Replacement

The recommended replacement battery is one CR2032 battery.

NOTE:

- Perchlorate Material — special handling may apply. See www.dtsc.ca.gov/hazardouswaste/perchlorate
- Do not touch the battery terminals that are on the back housing or the printed circuit board.

1. Remove the emergency key by sliding the mechanical latch on the back of the RKE transmitter sideways with your thumb and then pull the key out with your other hand.

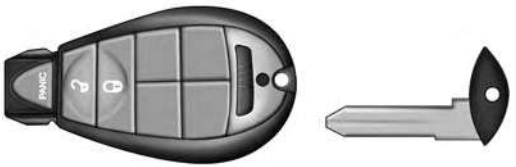

020207436

Ignition Node Module (IGNM) Emergency Key Removal

0202005021

Keyless Ignition Node (KIN) Emergency Key Removal

2. separating RKE halves requires screw removal and gently prying the two halves of the RKE transmitter apart. Make sure not to damage the seal during removal.

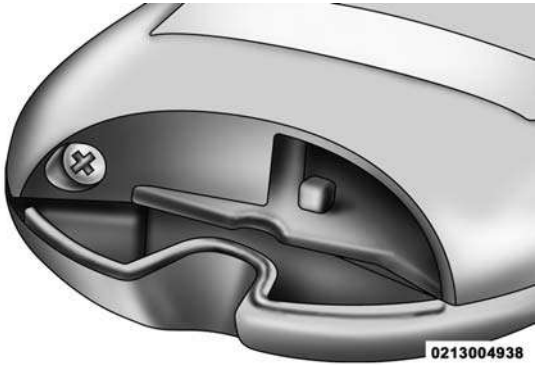

0213004938

Remove Screw From Transmitter Case

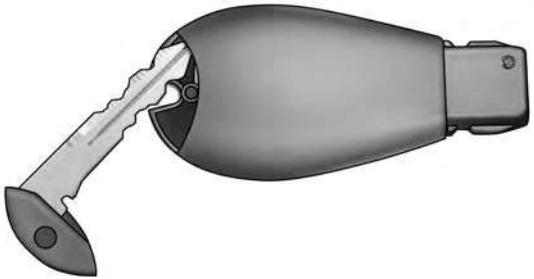

Separating Ignition Node Module (IGNM) Transmitter Case

Separating Keyless Ignition Node (KIN) Transmitter Case

3. Remove the battery by turning the back cover over (battery facing downward) and tapping it lightly on a solid surface such as a table or similar, then replace the battery. When replacing the battery, match the + sign on the battery to the + sign on the inside of the battery clip, located on the back cover. Avoid touching the new battery with your fingers. Skin oils may cause battery deterioration. If you touch a battery, clean it with rubbing alcohol.

4. To assemble the RKE transmitter case, snap the two halves together.

General Information

This device complies with Part 15 of the FCC rules and RSS 210 of Industry Canada. Operation is subject to the following conditions:

- This device may not cause harmful interference.
- This device must accept any interference received, including interference that may cause undesired operation.

NOTE: Changes or modifications not expressly approved by the party responsible for compliance could void the user's authority to operate the equipment.

If your RKE transmitter fails to operate from a normal distance, check for these two conditions:

1. A weak battery in the transmitter. The expected life of the battery is a minimum of three years.

2. Closeness to a radio transmitter such as a radio station tower, airport transmitter, and some mobile or CB radios.

REMOTE STARTING SYSTEM — IF EQUIPPED

This system uses the Remote Keyless Entry (RKE) transmitter to start the engine conveniently from outside the vehicle while still maintaining security. The system has a range of approximately 300 ft (91 m).

NOTE:

- The vehicle must be equipped with an automatic transmission to be equipped with Remote Start.
- Obstructions between the vehicle and the RKE transmitter may reduce this range.

How To Use Remote Start

All of the following conditions must be met before the engine will remote start:

- Shift lever in PARK
- Doors closed
- Hood closed
- HAZARD switch off
- BRAKE switch inactive (brake pedal not pressed)
- Ignition key removed from ignition switch
- Battery at an acceptable charge level
- RKE PANIC button not pressed
- Fuel meets minimum requirement
- System not disabled from previous remote start event
- Vehicle theft alarm not active

WARNING!

- **Do not start or run an engine in a closed garage or confined area. Exhaust gas contains Carbon Monoxide (CO) which is odorless and colorless. Carbon Monoxide is poisonous and can cause serious injury or death when inhaled.**
- **Keep Remote Keyless Entry (RKE) transmitters away from children. Operation of the Remote Start System, windows, door locks or other controls could cause serious injury or death.**

Remote Start Abort Message On Electronic Vehicle Information Center (EVIC) — If Equipped

The following messages will display in the EVIC if the vehicle fails to remote start or exits remote start prematurely:

- Remote Start Aborted — Door Ajar
- Remote Start Aborted — Hood Ajar
- Remote Start Aborted — Fuel Low
- Remote Start Aborted — System Fault
- Remote Start Disabled — Start Vehicle to Reset

The EVIC message stays active until the ignition is turned to the ON/RUN position.

To Enter Remote Start Mode

Press and release the REMOTE START button on the RKE transmitter twice within five seconds. The parking lights will flash vehicle doors will lock, and the horn will chirp twice (if programmed). Once the vehicle has started, the engine will run for 15 minutes.

NOTE:

- If your power door locks were unlocked, Remote Start will automatically lock the doors.
- If an engine fault is present or fuel level is low, the vehicle will start and then shut down in 10 seconds.
- The park lamps will turn on and remain on during Remote Start mode.
- For security, power window and power sunroof operation (if equipped) are disabled when the vehicle is in the Remote Start mode.
- The engine can be started two consecutive times (two 15-minute cycles) with the RKE transmitter. However, the ignition switch must be cycled to the ON/RUN position before you can repeat the start sequence for a third cycle.

To Exit Remote Start Mode Without Driving The Vehicle

Press and release the REMOTE START button one time or allow the engine to run for the entire 15-minute cycle.

NOTE: To avoid unintentional shut downs, the system will disable the one time press of the REMOTE START button for two seconds after receiving a valid Remote Start request.

To Exit Remote Start Mode And Drive The Vehicle

Before the end of the 15-minute cycle, press and release the UNLOCK button on the RKE transmitter to unlock the doors and disarm the Vehicle Security Alarm System (if equipped). Then, prior to the end of the 15 minute cycle, press and release the START/STOP button.

NOTE:

- The message "Push Start Button" will display in the EVIC until you push the START button.
- "Remote Start Active — Push Start Button" will display in the EVIC until you press the start button. Refer to "Electronic Vehicle Information Center (EVIC)" for further information.

Remote Start Comfort Systems — If Equipped

When remote start is activated, the heated steering wheel, and driver heated seat features will automatically turn on in cold weather. In warm weather, the driver vented seat feature will automatically turn on when the remote start is activated. These features will stay on through the duration of remote start or until the ignition switch is turned to the ON/RUN position.

The Remote Start Comfort System can be activated and deactivated through the Uconnect® System. For more information on Remote Start Comfort System operation refer to "Uconnect® Settings" in "Understanding Your Instrument Panel".

DOOR LOCKS

Manual Door Locks

Front and rear doors may be locked by moving the lock knob down or unlocked by moving the lock knob up.

Door Lock Knob

Front doors may be opened with the inside door handle without lifting the lock knob.

Doors locked before closing will remain locked when closed.

The emergency key will unlock the driver door lock on your vehicle.

WARNING!

- **Do not leave children or animals inside parked vehicles in hot weather. Interior heat build-up may cause serious injury or death.**
- **For personal security and safety in the event of an collision, lock the vehicle doors as you drive as well as when you park and leave the vehicle.**

(Continued)

WARNING! ***(Continued)***

- **Before exiting a vehicle, always turn the vehicle OFF, apply the parking brake, shift the automatic transmission into PARK or the manual transmission into REVERSE, and remove the Key Fob from the ignition. When leaving the vehicle, always lock your vehicle.**
- **Never leave children alone in a vehicle, or with access to an unlocked vehicle.**
- **Allowing children to be in a vehicle unattended is dangerous for a number of reasons. A child or others could be seriously or fatally injured. Children should be warned not to touch the parking brake, brake pedal or the shift lever.**

(Continued)

WARNING! ***(Continued)***

- **Do not leave the Key Fob in or near the vehicle, or in a location accessible to children, and do not leave the ignition of a vehicle equipped with Keyless Enter-N-Go in the ACC or ON/RUN mode. A child could operate power windows, other controls, or move the vehicle.**

Power Door Locks — If Equipped

A power door LOCK switch is on each front door trim panel. Use this switch to lock or unlock the doors.

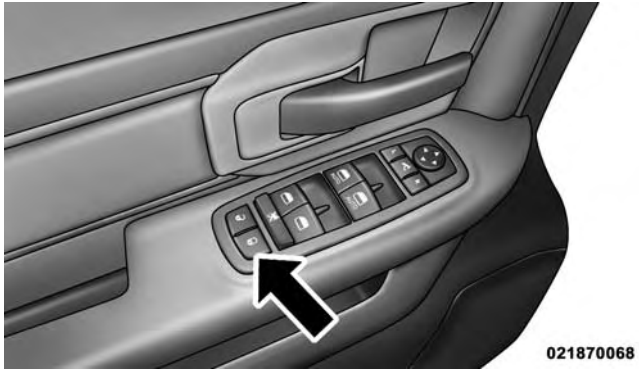

Power Door Lock Switch Location

If you press the power door LOCK switch while the Key Fob is in the ignition, and any front door is open, the power locks will not operate. This prevents you from accidentally locking your Key Fob in the vehicle. Removing the Key Fob or closing the door will allow the locks to operate. A chime will sound if the Key Fob is in the ignition switch and a door is open, as a reminder to remove the Key Fob.

Automatic Door Locks — If Equipped

The auto door lock feature default condition is enabled. When enabled, the door locks will lock automatically when the vehicle's speed exceeds 15 mph (24 km/h). The auto door lock feature can be enabled or disabled by your authorized dealer per written request of the customer. Please see your authorized dealer for service.

Auto Unlock Doors — If Equipped

This feature unlocks all of the doors of the vehicle when either front door is opened. This will occur only after the vehicle has been shifted into the PARK position after the vehicle has been driven (shifted out of PARK and all doors closed).

Auto Unlock Doors Programming — If Equipped

The Auto Unlock Doors feature can be enabled or disabled as follows:

For vehicles equipped with the EVIC, refer to "Electronic Vehicle Information Center (EVIC)/Personal Settings (System Setup)" in "Understanding Your Instrument Panel" for further information.

NOTE: Use the Auto Unlock Doors feature in accordance with local laws.

Child-Protection Door Lock

To provide a safer environment for children riding in the rear seat, the rear doors (if equipped) of your vehicle have the Child-Protection Door Lock system.

Child-Protection Door Lock Location

To use the system, open each rear door, use a flat blade screwdriver (or emergency key) and rotate the dial to engage and disengage the Child-Protection locks. When the system on a door is engaged, that door can only be opened by using the outside door handle even if the inside door lock is in the unlocked position.

Child Lock Control

WARNING!

Avoid trapping anyone in a vehicle in a collision. Remember that the rear doors can only be opened from the outside when the Child-Protection locks are engaged.

NOTE:

- After setting the Child-Protection Door Lock system, always test the door from the inside to make certain it is in the desired position.
- For emergency exit with the system engaged, move the door lock switch to the UNLOCK position, roll down the window and open the door with the outside door handle.

KEYLESS ENTER-N-GO™

The Passive Entry system is an enhancement to the vehicle's Remote Keyless Entry (RKE) system and a feature of Keyless Enter-N-Go™. For further information, refer to "Keyless Enter-N-Go™" in "STARTING AND OPERATING". This feature allows you to lock and unlock the vehicle's door(s) without having to press the RKE transmitter lock or unlock buttons.

NOTE:

- Passive Entry may be programmed ON/OFF; refer to "Uconnect® settings" in "Understanding Your Instrument Panel" for further information.
- If wearing gloves on your hands, or if it has been raining on the Passive Entry door handle, the unlock sensitivity can be affected, resulting in a slower response time.
- If the vehicle is unlocked by the Passive Entry Door Handle, and no door goes ajar within 60 seconds, the vehicle will re-lock and if equipped will arm the theft alarm.
- The vehicles theft alarm can be armed/disarmed by pressing the passive entry key fob lock/unlock buttons (if equipped).

To Unlock From The Driver's Side:

With a valid Passive Entry RKE transmitter within 5 ft (1.5 m) of the driver door handle, grab the front driver door handle to unlock the driver's door automatically. The interior door panel lock knob will raise when the door is unlocked.

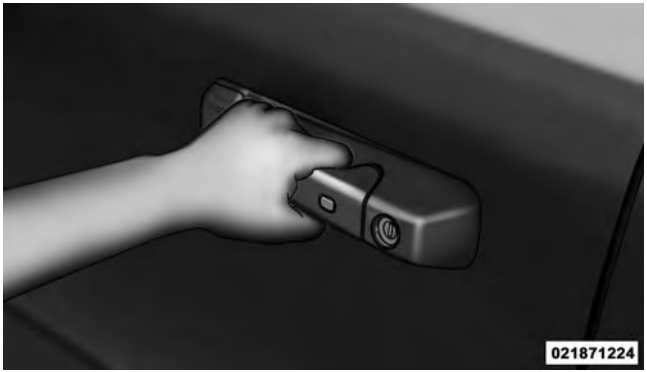

Grab The Door Handle To Unlock

NOTE: If "Unlock All Doors 1st Press" is programmed all doors will unlock when you grab hold of the front driver's door handle. To select between "Unlock Driver Door 1st Press" and "Unlock All Doors 1st Press", refer to "Uconnect® Settings" in "Understanding Your Instrument Panel" for further information.

To Unlock From The Passenger Side:

With a valid Passive Entry RKE transmitter within 5 ft (1.5 m) of the passenger door handle, grab the front passenger door handle to unlock all doors automatically. The interior door panel lock knob will raise when the door is unlocked.

NOTE: All doors will unlock when the front passenger door handle is grabbed regardless of the driver's door unlock preference setting ("Unlock Driver Door 1st Press" or "Unlock All Doors 1st Press").

Preventing Inadvertent Locking Of Passive Entry RKE Transmitter In Vehicle

To minimize the possibility of unintentionally locking a Passive Entry RKE transmitter inside your vehicle, the Passive Entry system is equipped with an automatic door unlock feature which will function if the ignition switch is in the OFF position.

If one of the vehicle doors is open and the door panel switch is used to lock the vehicle, once all open doors have been closed the vehicle checks the inside and outside of the vehicle for any valid Passive Entry RKE transmitters. If one of the vehicle's Passive Entry RKE transmitters is detected inside the vehicle, and no other valid Passive Entry RKE transmitters are detected outside the vehicle, the Passive Entry System automatically unlocks all vehicle doors and chirps the horn three times (on the third attempt ALL doors will lock and the Passive Entry RKE transmitter can be locked in the vehicle).

To Lock The Vehicle's Doors

With one of the vehicle's Passive Entry RKE transmitters within 5 ft (1.5 m) of the driver or passenger front door handles, press the door handle LOCK button to lock all doors.

Press The Door Handle Button To Lock

Do NOT grab the door handle, when pressing the door handle lock button. This could unlock the door(s).

Do NOT Grab The Door Handle When Locking

NOTE:

- After pressing the door handle LOCK button, you must wait two seconds before you can lock or unlock the doors, using either Passive Entry door handle. This is done to allow you to check if the vehicle is locked by pulling the door handle, without the vehicle reacting and unlocking.
- The Passive Entry system will not operate if the RKE transmitter battery is dead.

The vehicle doors can also be locked by using the RKE transmitter lock button or the lock button located on the vehicle's interior door panel.

WINDOWS

Power Windows – If Equipped

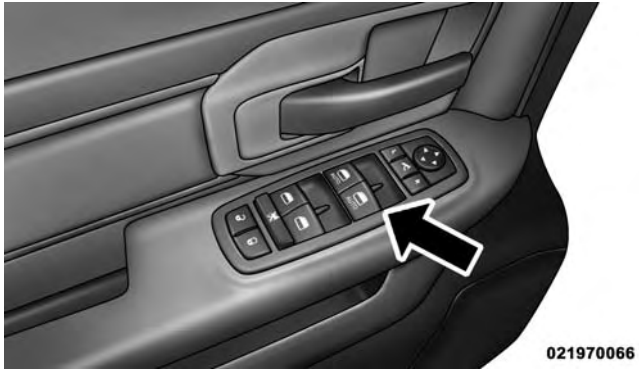

Power Window Switches

The control on the left front door panel has UP-DOWN switches that give you fingertip control of all power windows. There is a single opening and closing switch on the front passenger door for passenger window control and on the rear doors of the Quad Cab and Crew Cab models. The windows will operate when the ignition switch is turned to the ON/RUN or ACC position, and for up to 10 minutes after the ignition is turned OFF or until a front door is opened.

NOTE: The Key Off Power Delay feature will allow the power windows to operate for up to 10 minutes after the ignition is turned OFF. This feature is cancelled when either front door is opened.

WARNING!

- **Never leave children alone in a vehicle, or with access to an unlocked vehicle. Allowing children to be in a vehicle unattended is dangerous for a number of reasons. A child or others could be seriously or fatally injured. Children should be warned not to touch the parking brake, brake pedal or the shift lever.**
- **Do not leave the key fob in or near the vehicle (or in a location accessible to children), and do not leave the ignition of a vehicle equipped with Keyless Enter-N-Go™ in the ACC or ON/RUN mode. A child could operate power windows, other controls, or move the vehicle.**

Auto-Down

Both the driver and front passenger window switch have an Auto-Down feature. Press the window switch past the first detent, release, and the window will go down automatically. To cancel the Auto-Down movement, operate the switch in either the up or down direction and release the switch.

To stop the window from going all the way down during the Auto-Down operation, pull up on the switch briefly.

To open the window part way, press to the first detent and release it when you want the window to stop.

Auto-Up Feature With Anti-Pinch Protection (4-Door Models Driver And Front Passenger Door Only) — If Equipped

Lift the window switch fully upward to the second detent, release, and the window will go up automatically.

To stop the window from going all the way up during the Auto Up operation, push down on the switch briefly.

To close the window part way, lift the window switch to the first detent and release when you want the window to stop.

NOTE: If the window runs into any obstacle during the auto-closure, it will reverse direction and then go back down. Remove the obstacle and use the window switch again to close the window. Any impact due to rough road conditions may trigger the auto reverse function unexpectedly during auto closure. If this happens, pull the switch lightly to the first detent and hold to close the window manually.

WARNING!

There is no anti-pinch protection when the window is almost closed. Be sure to clear all objects from the window before closing.

Reset Auto-Up

Should the Auto Up feature stop working, the window probably needs to be reset. To reset Auto Up:

1. Make sure the door is fully closed.
2. Pull the window switch up to close the window completely and continue to hold the switch up for an additional two seconds after the window is closed.
3. Push the window switch down firmly to the second detent to open the window completely and continue to hold the switch down for an additional two seconds after the window is fully open.

Window LOCKOUT Switch (4–Door Models Only)

The window LOCKOUT switch on the driver's door allows you to disable the window control on the front passenger and rear passenger doors. To disable the window controls on the front passenger and rear passenger doors, press the window LOCK button into the latched or down position. To enable the window controls, press the window LOCK button again and return the switch to the released or up position.

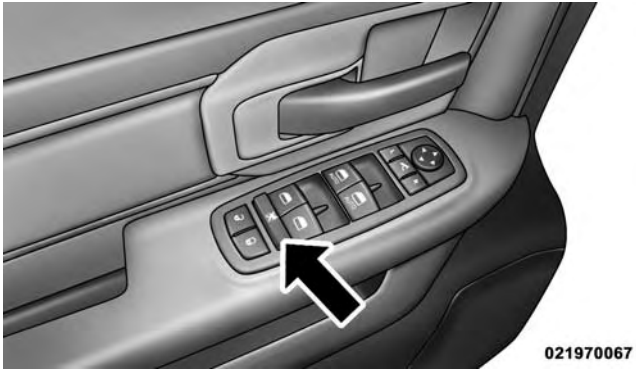

Window Lockout Switch

Wind Buffeting

Wind buffeting can be described as the perception of pressure on the ears or a helicopter-type sound in the ears. Your vehicle may exhibit wind buffeting with the windows down, or the sunroof (if equipped) in certain open or partially open positions. This is a normal occurrence and can be minimized. If the buffeting occurs with the rear windows open, then open the front and rear windows together to minimize the buffeting. If the buffeting occurs with the sunroof open, adjust the sunroof opening to minimize the buffeting.

OCCUPANT RESTRAINTS

Some of the most important safety features in your vehicle are the restraint systems:

- Three-point lap and shoulder belts for the driver and all passengers
- Front seat belts may incorporate pretensioners that may enhance occupant protection by managing occupant energy during an impact event
- Advanced Front Air Bags for driver and front passenger
- Supplemental Side Air Bag Inflatable Curtains (SABIC) — if equipped

- Supplemental Seat-Mounted Side Air Bags (SAB)
- An energy-absorbing steering column and steering wheel
- Knee bolsters/blockers for front seat occupants
- All seat belt systems (except driver's, front center and second row center position) include Automatic Locking Retractors (ALRs), which lock the seat belt webbing into position by extending the belt all the way out and then adjusting the belt to the desired length to restrain a child seat or secure a large item in a seat — if equipped

Please pay close attention to the information in this section. It tells you how to use your restraint system properly, to keep you and your passengers as safe as possible.

If you will be carrying children too small for adult-sized seat belts, the seat belts or the Lower Anchors and Tether for CHildren (LATCH) feature also can be used to hold infant and child restraint systems. For more information on LATCH, refer to Lower Anchors and Tether for CHildren (LATCH).

NOTE: The Advanced Front Air Bags have a multistage inflator design. This allows the air bag to have different rates of inflation based on several factors, including the severity and type of collision.

Here are some simple steps you can take to minimize the risk of harm from a deploying air bag:

1. **Children 12 years old and under should always ride buckled up in a rear seat.**

WARNING!

- **Never place a rear facing infant seat in front of an air bag. A deploying passenger Advanced Front Air Bag can cause death or serious injury to a child 12 years or younger, including a child in a rearward facing infant seat.**
- **Only use a rearward-facing child restraint in a rear seat.**

Children that are not big enough to wear the vehicle seat belt properly (see section on Child Restraints) should be secured in the rear seat in child restraints or belt-positioning booster seats. Older children who do not use child restraints or belt-positioning booster seats should ride properly buckled up in the rear seat. Never allow children to slide the shoulder belt behind them or under their arm.

If a child from 2 to 12 years old (not in a rear facing child seat) must ride in the front passenger seat, move the seat as far back as possible and use the proper child restraint. (Refer to “Child Restraints”).

You should read the instructions provided with your child restraint to make sure that you are using it properly.

2. **All occupants should always wear their lap and shoulder belts properly.**

3. **The driver and front passenger seats should be moved back as far as practical to allow the Advanced Front Air Bags room to inflate.**

4. **Do not lean against the door or window. If your vehicle has side air bags, and deployment occurs, the side air bags will inflate forcefully into the space between you and the door.**

5. **If the air bag system in this vehicle needs to be modified to accommodate a disabled person, contact the Customer Center. Phone numbers are provided under "If You Need Assistance".**

WARNING!

- **Relying on the air bags alone could lead to more severe injuries in a collision. The air bags work with your seat belt to restrain you properly. In some collisions, the air bags won't deploy at all. Always wear your seat belts even though you have air bags.**

(Continued)

WARNING! ***(Continued)***

- **Being too close to the steering wheel or instrument panel during Advanced Front Air Bag deployment could cause serious injury, including death. Air Bags need room to inflate. Sit back, comfortably extending your arms to reach the steering wheel or instrument panel.**
- **Supplemental Side Air Bag Inflatable Curtain (SABIC) — if equipped and Seat-Mounted Side Air Bags (SAB) also need room to inflate. Do not lean against the door or window. Sit upright in the center of the seat.**

(Continued)

WARNING! ***(Continued)***

- **In a collision, you and your passengers can suffer much greater injuries if you are not properly buckled up. You can strike the interior of your vehicle or other passengers, or you can be thrown out of the vehicle. Always be sure you and others in your vehicle are buckled up properly.**
- **Being too close to the Supplemental Side Air Bag Inflatable Curtain (SABIC) — if equipped and/or Seat-Mounted Side Air Bag (SAB) during deployment could cause you to be severely injured or killed.**

Buckle up even though you are an excellent driver, even on short trips. Someone on the road may be a poor driver and cause a collision that includes you. This can happen far away from home or on your own street.

Research has shown that seat belts save lives, and they can reduce the seriousness of injuries in a collision. Some of the worst injuries happen when people are thrown from the vehicle. Seat belts reduce the possibility of ejection and the risk of injury caused by striking the inside of the vehicle. Everyone in a motor vehicle should be belted at all times.

Lap/Shoulder Belts

All seating positions except the Quad Cab®, Mega Cab® and Crew Cab front center seating position have combination lap/shoulder belts. The belt webbing retractor is designed to lock during very sudden stops or collisions. This feature allows the shoulder part of the belt to move freely with you under normal conditions. However, in a collision the belt will lock and reduce the risk of you striking the inside of the vehicle or being thrown out.

WARNING!

- **It is dangerous to ride in a cargo area, inside or outside of a vehicle. In a collision, people riding in these areas are more likely to be seriously injured or killed.**
- **Do not allow people to ride in any area of your vehicle that is not equipped with seats and seat belts.**
- **Be sure everyone in your vehicle is in a seat using a seat belt properly.**

(Continued)

WARNING! ***(Continued)***

- **Wearing a seat belt incorrectly is dangerous. Seat belts are designed to go around the large bones of your body. These are the strongest parts of your body and take the forces of a collision the best. Wearing your belt in the wrong place could make your injuries in a collision much worse. You might suffer internal injuries, or you could even slide out of part of the belt. Follow these instructions to wear your seat belt safely and to keep your passengers safe, too.**
- **Two people should never be belted into a single seat belt. People belted together can crash into one another in a collision, hurting one another badly. Never use a lap/shoulder belt or a lap belt for more than one person, no matter what their size.**

Lap/Shoulder Belt Operating Instructions

1. Enter the vehicle and close the door. Sit back and adjust the seat.
2. The seat belt latch plate is above the back of the front seat, next to your arm in the rear seat. Grasp the latch plate and pull out the belt. Slide the latch plate up the webbing as far as necessary to allow the belt to go around your lap.

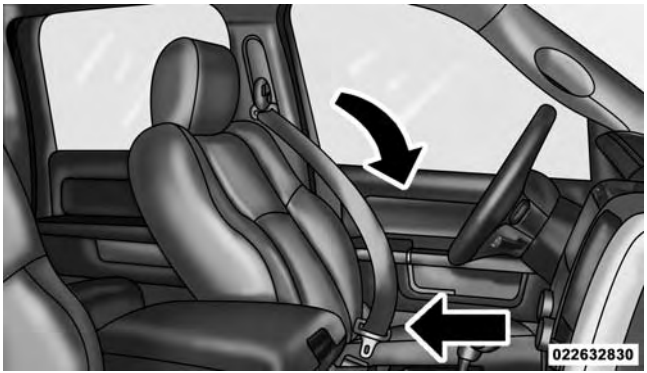

Pulling Out Latch Plate And Webbing

3. When the belt is long enough to fit, insert the latch plate into the buckle until you hear a “click.”

Latch Plate To Buckle

WARNING!

- **A belt buckled into the wrong buckle will not protect you properly. The lap portion could ride too high on your body, possibly causing internal injuries. Always buckle your belt into the buckle nearest you.**
- **A belt that is too loose will not protect you properly. In a sudden stop you could move too far forward, increasing the possibility of injury. Wear your seat belt snugly.**

(Continued)

WARNING! ***(Continued)***

- **A belt that is worn under your arm is dangerous. Your body could strike the inside surfaces of the vehicle in a collision, increasing head and neck injury. A belt worn under the arm can cause internal injuries. Ribs aren't as strong as shoulder bones. Wear the belt over your shoulder so that your strongest bones will take the force in a collision.**
- **A shoulder belt placed behind you will not protect you from injury during a collision. You are more likely to hit your head in a collision if you do not wear your shoulder belt. The lap and shoulder belt are meant to be used together.**

4. Position the lap belt across your thighs, below your abdomen. To remove slack in the lap belt portion, pull up on the shoulder belt. To loosen the lap belt if it is too tight, tilt the latch plate and pull on the lap belt. A snug belt reduces the risk of sliding under the belt in a collision.

Removing Slack From Belt

WARNING!

- **A lap belt worn too high can increase the risk of internal injury in a collision. The belt forces won't be at the strong hip and pelvic bones, but across your abdomen. Always wear the lap belt as low as possible and keep it snug.**
- **A twisted belt may not protect you properly. In a collision, it could even cut into you. Be sure the belt is straight. If you can't straighten a belt in a vehicle, take it to your authorized dealer immediately and have it fixed.**

5. Position the shoulder belt on your chest so that it is comfortable and not resting on your neck. The retractor will withdraw any slack in the belt.
6. To release the belt, push the red button on the buckle. The belt will automatically retract to its stowed position. If necessary, slide the latch plate down the webbing to allow the belt to retract fully.

WARNING!

A frayed or torn belt could rip apart in a collision and leave you with no protection. Inspect the belt system periodically, checking for cuts, frays, or loose parts. Damaged parts must be replaced immediately. Do not disassemble or modify the system. Seat belt assemblies must be replaced after a collision if they have been damaged (bent retractor, torn webbing, etc.) or if the air bag deployed.

Regular Cab Front Center Three Point Belt

1. The front center seat belt on the Regular Cab may be disconnected to open up utilization of the storage areas behind the front seats. The black latch plate can be detached from the black keyed seat belt buckle located on the inboard side of the passenger seat. Insert the seat belt tongue into the center red slot on the black buckle. The black buckle latch plate can be removed when the seat belt tongue is pressed into the buckle. Allow the retractor to take up the extra webbing, and the buckles will hang vertically from the cab back exit bezel, thus freeing up all the area behind the front seats.

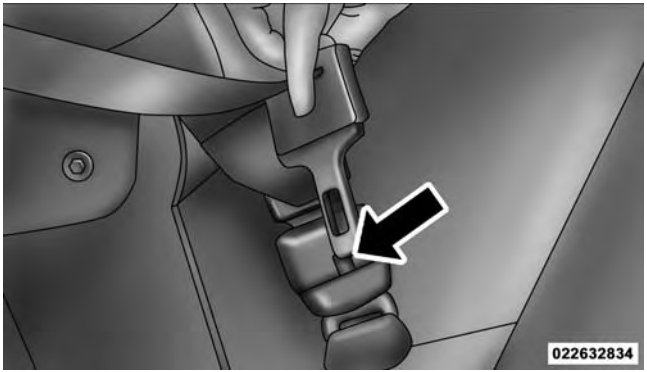

Detaching Buckle With Seat Belt Tongue

2. To reattach the seat belt to the front center seat, pull the black buckle latch plate forward from the cab back panel and insert it into the black keyed buckle until there is an audible “click”. For proper seat belt usage, refer “Lap/Shoulder Belt Operating Instructions”.

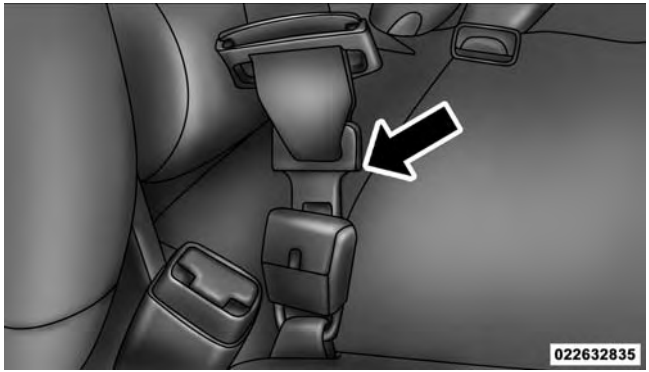

Inserting Latch Plate

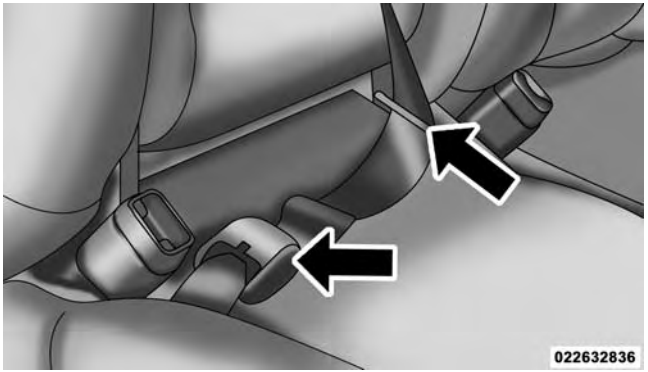

In Use Position

WARNING!

- **If the black latch and black buckle are not properly connected when the seat belt is used by an occupant, the seat belt will not be able to provide proper restraint and will increase the risk of injury in a collision.**
- **When reattaching the black latch and black buckle, ensure the seat belt webbing is not twisted. If the webbing is twisted, follow the preceding procedure to detach the black latch and black buckle, untwist the webbing, and reattach the black latch and black buckle.**

Lap/Shoulder Belt Untwisting Procedure

Use the following procedure to untwist a twisted lap/shoulder belt.

1. Position the latch plate as close as possible to the anchor point.
2. At about 6 to 12 in (15 to 30 cm) above the latch plate, grasp and twist the belt webbing 180 degrees to create a fold that begins immediately above the latch plate.
3. Slide the latch plate upward over the folded webbing. The folded webbing must enter the slot at the top of the latch plate.
4. Continue to slide the latch plate up until it clears the folded webbing.

Adjustable Upper Shoulder Belt Anchorage

In the front row outboard seats, the shoulder belt can be adjusted upward or downward to help position the belt away from your neck. Press the button located on the upper belt guide, and then move it up or down to the position that fits you best.

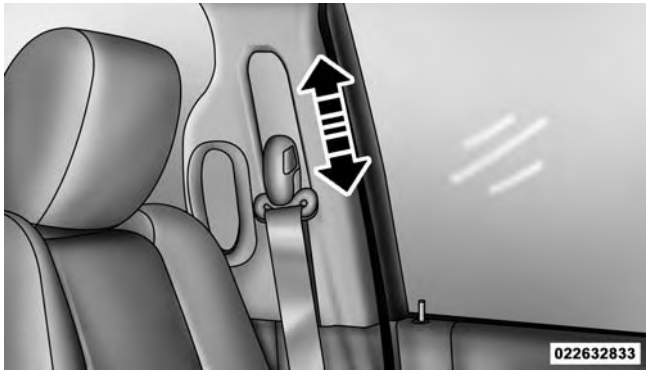

Adjusting Upper Shoulder Belt

As a guide, if you are shorter than average you will prefer a lower position, and if you are taller than average you will prefer a higher position. When you release the anchorage, try to move it up or down to make sure that it is locked in position.

Center Lap Belts

The center seating position for the Quad Cab®, Mega Cab® and Crew Cab front seat has a lap belt only. To fasten the lap belt, slide the latch plate into the buckle until you hear a "click". To lengthen the lap belt, tilt the latch plate and pull. To remove slack, pull the loose end of the webbing. Wear the lap belt snug against the hips. Sit back and erect in the seat, then adjust the belt as tightly as is comfortable.

WARNING!

- **A lap belt worn too loose or too high is dangerous.**
- **A belt worn too loose can allow you to slip down and under the belt in a collision.**
- **A belt that is too loose or too high will apply crash forces to the abdomen, not to the stronger hip bones. In either case, the risk of internal injuries is greater. Wear a lap belt low and snug.**

Seat Belts In Passenger Seating Positions

The seat belts in the passenger seating positions are equipped with either a switchable Automatic Locking Retractors (ALR) or with a Cinching Latchplate which is used to secure a child restraint system. For additional information, refer to "Installing Child Restraints Using The Vehicle Seat Belt" under the "Child Restraints" section. The chart below defines the type of feature for each seating position.

For Quad Cab®, Mega Cab® and Crew Cab Only

	Driver	Center	Passenger
First Row	N/A	Cinch	ALR
Second Row	ALR	Cinch	ALR

- N/A — Not Applicable
- ALR — Automatic Locking Retractor

For Standard Cab Only

	Driver	Center	Passenger
First Row	N/A	ALR	ALR
Second Row	N/A	N/A	N/A

- N/A — Not Applicable
- ALR — Automatic Locking Retactor

If the passenger seating position is equipped with an ALR and is being used for normal usage:

Only pull the belt webbing out far enough to comfortably wrap around the occupant's mid-section so as to not activate the ALR. If the ALR is activated, you will hear a ratcheting sound as the belt retracts. Allow the webbing to retract completely in this case and then carefully pull out only the amount of webbing necessary to comfortably wrap around the occupant's mid-section. Slide the latch plate into the buckle until you hear a "click."

Automatic Locking Retractor (ALR) Mode – If Equipped

In this mode, the shoulder belt is automatically pre-locked. The belt will still retract to remove any slack in the shoulder belt.

When To Use The Automatic Locking Mode

Use the Automatic Locking Mode anytime a child safety seat is installed in a seating position that has a belt with this feature. Children 12 years old and under should always be properly restrained in the rear seat.

How To Engage The Automatic Locking Mode

1. Buckle the combination lap and shoulder belt.
2. Grasp the shoulder portion and pull downward until the entire belt is extracted.
3. Allow the belt to retract. As the belt retracts, you will hear a clicking sound. This indicates the safety belt is now in the Automatic Locking Mode.

How To Disengage The Automatic Locking Mode

Unbuckle the combination lap/shoulder belt and allow it to retract completely to disengage the Automatic Locking Mode and activate the vehicle sensitive (emergency) locking mode.

WARNING!

- **The belt and retractor assembly must be replaced if the seat belt assembly Automatic Locking Retractor (ALR) feature or any other seat belt function is not working properly when checked according to the procedures in the Service Manual.**
- **Failure to replace the belt and retractor assembly could increase the risk of injury in collisions.**

Energy Management Feature

This vehicle has a safety belt system with an Energy Management feature in the front seating positions to help further reduce the risk of injury in the event of a head-on collision.

This safety belt system has a retractor assembly that is designed to release webbing in a controlled manner. This feature is designed to help reduce the belt force acting on the occupant's chest.

Seat Belt Pretensioners

The seat belts for both front seating positions are equipped with pretensioning devices that are designed to remove slack from the seat belt in the event of a collision. These devices may improve the performance of the seat belt by assuring that the belt is tight around the occupant early in a collision. Pretensioners work for all size occupants, including those in child restraints.

NOTE: These devices are not a substitute for proper seat belt placement by the occupant. The seat belt still must be worn snugly and positioned properly.

The pretensioners are triggered by the Occupant Restraint Controller (ORC). Like the air bags, the pretensioners are single use items. A deployed pretensioner or a deployed air bag must be replaced immediately.

Enhanced Seat Belt Use Reminder System (BeltAlert®)

BeltAlert® is a feature intended to remind the driver and front passenger (if equipped with front passenger BeltAlert®) to fasten their seat belts. The feature is active whenever the ignition is on. If the driver or front seat passenger is unbelted, the Seat Belt Reminder Light will turn on and remain on until both front seat belts are fastened.

The BeltAlert® warning sequence begins after the vehicle speed is over 5 mph (8 km/h), by blinking the Seat Belt

Reminder Light and sounding an intermittent chime. Once the sequence starts, it will continue for the entire duration or until the respective seatbelts are fastened. After the sequence completes, the Seat Belt Reminder Light remains illuminated until the respective seat belts are fastened. The driver should instruct all other occupants to fasten their seat belts. If a front seat belt is unbuckled while traveling at speeds greater than 5 mph (8 km/h), BeltAlert® will provide both audio and visual notification.

The front passenger seat BeltAlert® is not active when the front passenger seat is unoccupied. BeltAlert® may be triggered when an animal or heavy object is on the front passenger seat or when the seat is folded flat (if equipped). It is recommended that pets be restrained in the rear seat in pet harnesses or pet carriers that are secured by seat belts, and cargo is properly stowed.

BeltAlert® can be enabled or disabled by your authorized dealer. Chrysler Group LLC does not recommend deactivating BeltAlert®.

NOTE: Although BeltAlert® has been deactivated, the Seat Belt Reminder Light will continue to illuminate while the driver's or front passenger (if equipped with BeltAlert®) seat belt remains unfastened.

Seat Belts And Pregnant Women

We recommend that pregnant women use seat belts throughout their pregnancies. Keeping the mother safe is the best way to keep the baby safe.

Pregnant women should wear the lap part of the belt across the thighs and as snug across the hips as possible. Keep the belt low so that it does not come across the abdomen. That way the strong bones of the hips will take the force if there is a collision.

Seat Belt Extender

If a seat belt is too short even when fully extended and when the adjustable upper shoulder belt anchorage (if equipped) is in its lowest position, your authorized dealer can provide you with a seat belt extender. This extender should be used only if the existing belt is not long enough. When it is not required, remove the extender and store it.

WARNING!

Using a seat belt extender when not needed can increase the risk of injury in a collision. Only use when the seat belt is not long enough when it is worn low and snug and in the recommended seating positions. Remove and store the extender when not needed.

Supplemental Restraint System (SRS) — Air Bags

This vehicle has Advanced Front Air Bags for both the driver and front passenger as a supplement to the seat belt restraint systems. The driver's Advanced Front Air Bag is mounted in the center of the steering wheel. The passenger's Advanced Front Air Bag is mounted in the instrument panel, above the glove compartment. The words SRS AIRBAG are embossed on the air bag covers.

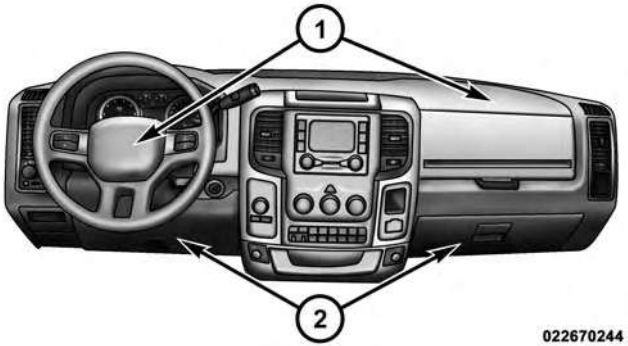

Advanced Front Air Bag And Knee Bolster Locations

1 — Driver And Passenger Advanced Front Air Bags
2 — Knee Bolster

eb

NOTE: The Driver and Front Passenger Advanced Front Air Bags are certified to the new Federal regulations for Advanced Air Bags.

The Advanced Front Air Bags have a multistage inflator design. This allows the air bag to have different rates of inflation based on several factors, including the severity and type of collision.

This vehicle may be equipped with a driver and/or front passenger seat belt buckle switch that detects whether the driver or front passenger seat belt is fastened. The seat belt buckle switch may adjust the inflation rate of the Advanced Front Air Bags.

This vehicle may also be equipped with Supplemental Side Air Bag Inflatable Curtains (SABIC) to protect the driver, front, and rear passengers sitting next to a window. If the vehicle is equipped with SABIC air bags, they are located above the side windows and their covers are also labeled: SRS AIRBAG.

This vehicle is equipped with Supplemental Seat-Mounted Side Air Bags (SAB) to provide enhanced protection for an occupant during a side impact. The Supplemental Seat-Mounted Side Air Bags they are located in the outboard side of the front seats.

NOTE:

- Air Bag covers may not be obvious in the interior trim, but they will open during air bag deployment.
- After any collision, the vehicle should be taken to an authorized dealer immediately.

Air Bag System Components

Your vehicle may be equipped with the following air bag system components:

- Occupant Restraint Controller (ORC)
- Air Bag Warning Light
- Steering Wheel and Column
- Instrument Panel
- Knee Impact Bolsters
- Driver Advanced Front Air Bag
- Passenger Advanced Front Air Bag
- Supplemental Seat-Mounted Side Air Bags (SAB)
- Supplemental Side Air Bag Inflatable Curtains (SABIC) — may be equipped
- Front and Side Impact Sensors
- Seat Belt Buckle Switch
- Seat Belt Pretensioners

Advanced Front Air Bag Features

The Advanced Front Air Bag system has multistage driver and front passenger air bags. This system provides output appropriate to the severity and type of collision as determined by the Occupant Restraint Controller (ORC), which may receive information from the front impact sensors (if equipped).

The first stage inflator is triggered immediately during an impact that requires air bag deployment. This low output is used in less severe collisions. A higher energy output is used for more severe collisions.

WARNING!

- **No objects should be placed over or near the air bag on the instrument panel, because any such objects could cause harm if the vehicle is in a collision severe enough to cause the air bag to inflate.**
- **Do not put anything on or around the air bag covers or attempt to open them manually. You may damage the air bags and you could be injured because the air bags may no longer be functional. The protective covers for the air bag cushions are designed to open only when the air bags are inflating.**
- **Do not drill, cut or tamper with the knee bolster in any way.**
- **Do not mount any accessories to the knee bolster such as alarm lights, stereos, citizen band radios, etc.**

Supplemental Seat-Mounted Side Air Bags (SAB)

Supplemental Seat-Mounted Side Air Bags may provide enhanced protection to help protect an occupant during a side impact. The Supplemental Seat-Mounted Side Air Bag is marked with an air bag label sewn into the outboard side of the front seats.

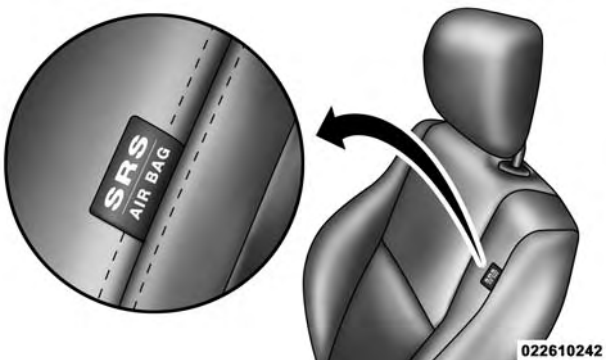

Supplemental Seat-Mounted Side Air Bag Label

When the air bag deploys, it opens the seam between the front and side of the seat's trim cover. Each air bag deploys independently; a left side impact deploys the left air bag only and a right-side impact deploys the right air bag only.

Supplemental Side Air Bag Inflatable Curtain (SABIC) — If Equipped

SABIC air bags may offer side-impact and vehicle roll-over protection to front and rear seat outboard occupants in addition to that provided by the body structure. Each air bag features inflated chambers placed adjacent to the head of each outboard occupant that reduce the potential for side-impact head injuries. The curtains deploy downward, covering both windows on the impact side.

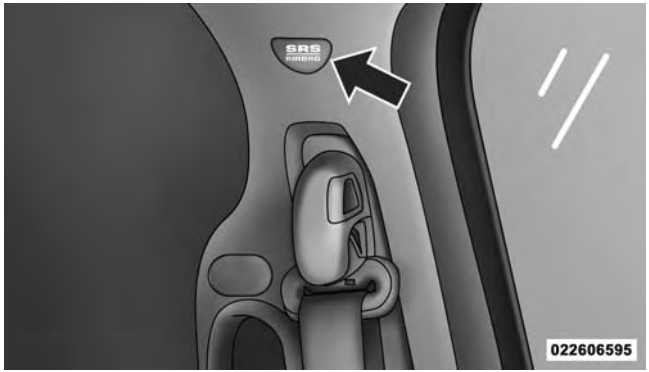

Supplemental Side Air Bag Inflatable Curtain (SABIC) Label Location

NOTE:

- Air Bag covers may not be obvious in the interior trim, but they will open during air bag deployment.
- Being too close to the SAB and SABIC air bags during deployment could cause you to be severely injured or killed.
- Should a vehicle rollover occur, the pretensioners (if equipped) and/or SAB and SABIC air bags on both sides of the vehicle may deploy.

The system includes side impact sensors that are calibrated to deploy the side air bags during impacts that require air bag occupant protection.

WARNING!

- **If your vehicle is equipped with left and right Supplemental Side Air Bag Inflatable Curtain (SABIC), do not stack luggage or other cargo up high enough to block the location of the SABIC. The area where the SABIC is located should remain free from any obstructions.**
- **Do not use accessory seat covers or place objects between you and the side air bags; the performance could be adversely affected and/or objects could be pushed into you, causing serious injury.**
- **If your vehicle is equipped with SABIC air bags, do not have any accessory items installed which will alter the roof, including adding a sunroof to your vehicle. Do not add roof racks that require permanent attachments (bolts or screws) for installation on the vehicle roof. Do not drill into the roof of the vehicle for any reason.**

SAB and SABIC air bags are a supplement to the seat belt restraint system. Occupants, including children who are up against or very close to SAB or SABIC air bags can be seriously injured or killed. Occupants, especially children, should not lean on or sleep against the door, side windows, or area where the SAB or SABIC air bags inflate, even if they are in an infant or child restraint.

Always sit upright as possible with your back against the seat back, use the seat belts properly, and use the appropriate sized child restraint, infant restraint or booster seat recommended for the size and weight of the child.

Knee Impact Bolsters

The Knee Impact Bolsters help protect the knees of the driver and front passengers, and position front occupants for the best interaction with the Advanced Front Air Bags.

Along with seat belts and pretensioners, Advanced Front Air Bags work with the knee impact bolsters to provide improved protection for the driver and front passenger.

Air Bag Deployment Sensors And Controls

Occupant Restraint Controller (ORC)

The ORC is part of a Federally regulated safety system required for this vehicle.

The ORC determines if deployment of the front and/or side air bags in a frontal or side collision is required. A central electronic ORC deploys the Advanced Front Air Bags, SABIC air bags — if equipped, SAB air bags, and front seat belt pretensioners, as required, depending on several factors, including the severity and type of impact.

Advanced Front Air Bags are designed to provide additional protection by supplementing the seat belts in certain frontal collisions depending on several factors, including the severity and type of collision. Advanced Front Air Bags are not expected to reduce the risk of injury in rear, rollover, or side collisions.

The Advanced Front Air Bags will not deploy in all frontal collisions, including some that may produce substantial vehicle damage — for example, some pole collisions, truck underrides, and angle offset collisions. On the other hand, depending on the type and location of impact, Advanced Front Air Bags may deploy in crashes with little vehicle front-end damage but that produce a severe initial deceleration.

The side air bags will not deploy in all side collisions. Side air bag deployment will depend on the severity and type of collision.

Because air bag sensors measure vehicle deceleration over time, vehicle speed and damage by themselves are not good indicators of whether or not an air bag should have deployed.

Seat belts are necessary for your protection in all collisions, and also are needed to help keep you in position, away from an inflating air bag.

The ORC monitors the readiness of the electronic parts of the air bag system whenever the ignition switch is in the START or ON/RUN position. If the key is in the LOCK position, in the ACC position, or not in the ignition, the air bag system is not on and the air bags will not inflate.

The ORC contains a backup power supply system that may deploy the air bags even if the battery loses power or it becomes disconnected prior to deployment.

Also, the ORC turns on the Air Bag Warning Light in the instrument panel for approximately four to eight seconds for a self-check when the ignition is first turned on. After the self-check, the Air Bag Warning Light will turn off. If the ORC detects a malfunction in any part of the system, it turns on the Air Bag Warning Light, either momentarily or continuously. A single chime will sound if the light comes on again after initial startup.

It also includes diagnostics that will illuminate the instrument cluster Air Bag Warning Light if a malfunction is noted that could affect the air bag system. The diagnostics also record the nature of the malfunction.

WARNING!

Ignoring the Air Bag Warning Light in your instrument panel could mean you won't have the air bags to protect you in a collision. If the light does not come on as a bulb check when the ignition is first turned on, stays on after you start the vehicle, or if it comes on as you drive, have an authorized dealer service the air bag system immediately.

Driver And Passenger Advanced Front Air Bag Inflator Units

The Driver and Passenger Advanced Front Air Bag Inflator Units are located in the center of the steering wheel and on the right side of the instrument panel. When the ORC detects a collision requiring the Advanced Front Air Bags, it signals the inflator units. A large quantity of non-toxic gas is generated to inflate the Advanced Front Air Bags. Different air bag inflation rates are possible, based on several factors, including the collision type and severity. The steering wheel hub trim cover and the upper right side of the instrument panel separate and fold out of the way as the air bags inflate to their full size. The air bags fully inflate in about 50 to 70 milliseconds. This is about half of the time it takes to blink your eyes. The air bags then quickly deflate while helping to restrain the driver and front passenger.

The Advanced Front Air Bag gas is vented through the vent holes in the sides of the air bag. In this way, the air bags do not interfere with your control of the vehicle.

Supplemental Seat-Mounted Side Air Bag (SAB) Inflator Units

The Supplemental Seat-Mounted Side Air Bags are designed to activate only in certain side collisions.

The ORC determines if a side collision requires the side air bags to inflate, based on the severity and type of collision.

Based on the severity and type of collision, the side air bag inflator on the crash side of the vehicle may be triggered, releasing a quantity of non-toxic gas. The inflating SAB exits through the seat seam into the space between the occupant and the door. The SAB fully inflate in about 10 milliseconds. The side air bag moves at a very high speed and with such a high force that it could injure

you if you are not seated properly, or if items are positioned in the area where the side air bag inflates. This especially applies to children.

Supplemental Side Air Bag Inflatable Curtain (SABIC) Inflator Units — If Equipped

During collisions where the impact is confined to a particular area of the side of the vehicle, the ORC may deploy the SABIC air bags, depending on the severity and type of collision. In these events, the ORC will deploy the SABIC only on the impact side of the vehicle.

A quantity of non-toxic gas is generated to inflate the side curtain air bag. The inflating side curtain air bag pushes the outside edge of the headliner out of the way and covers the window. The air bag inflates in about 30 milliseconds (about one-quarter of the time that it takes to blink your eyes) with enough force to injure you if you are not belted and seated properly, or if items are positioned in the area where the side curtain air bag inflates. This especially applies to children. The side curtain air bag is only about 3-1/2 in (9 cm) thick when it is inflated.

Because air bag sensors estimate deceleration over time, vehicle speed and damage are not good indicators of whether or not an air bag should have deployed.

NOTE: In a rollover the pretensioners, and/or SAB and SABIC air bags may deploy on both sides of the vehicle.

Front And Side Impact Sensors And Vehicle Rollover

In front and side impacts, impact sensors can aid the ORC in determining appropriate response to impact events.

Front And Side Impact Sensors

In front and side impacts, impact sensors can aid the ORC in determining appropriate response to impact events.

Enhanced Accident Response System

In the event of an impact causing air bag deployment, if the communication network remains intact, and the power remains intact, depending on the nature of the event the ORC will determine whether to have the Enhanced Accident Response System perform the following functions:

- Cut off fuel to the engine.
- Flash hazard lights as long as the battery has power or until the ignition key is turned off.
- Turn on the interior lights, which remain on as long as the battery has power or until the ignition key is removed.
- Unlock the doors automatically.

In order to reset the Enhanced Accident Response System functions after an event, the ignition switch must be changed from IGN ON to IGN OFF.

9-1-1 Call Operating Instructions – If Equipped

1. Press the 9-1-1 Call button ⏻ on the Rearview Mirror;

NOTE: In case the 9-1-1 Call button is pushed in error, there will be a 10 second delay before the 9-1-1 Call system initiates a call to a 9-1-1 operator. To cancel the 9-1-1 Call connection, press the 9-1-1 Call button on the Rearview Mirror or press the cancellation button on the Phone Screen . Termination of the 9-1-1 Call will turn the green LED light on the Rearview Mirror off.

2. The LED light located between the Assist and 9-1-1 buttons on the Rearview Mirror will turn green once a connection to a 9-1-1 operator has been made;

3. Once a connection between the vehicle and a 9-1-1 operator is made, the 9-1-1 Call system may transmit the following important vehicle information to a 9-1-1 operator:

- indication that the occupant placed a 9-1-1 Call;
- the vehicle brand; and
- the last known GPS coordinates of the vehicle.

4. You should be able to speak with the 9-1-1 operator through the vehicle audio system to determine if additional help is needed.

NOTE: Once a connection is made between the vehicle's 9-1-1 Call system and the 9-1-1 operator, the 9-1-1 operator may be able to open a voice connection with the vehicle to determine if additional help is needed. Once the 9-1-1 operator opens a voice connection with the vehicle's 9-1-1 Call system, the operator should be able to speak with you or other vehicle occupants and hear sounds occurring in the vehicle. The vehicle's 9-1-1 Call system will attempt to remain connected with the 9-1-1 operator until the 9-1-1 operator terminates the connection.

5. The 9-1-1 operator may attempt to contact appropriate emergency responders and provide them with important vehicle information and GPS coordinates.

WARNING!

- **If anyone in the vehicle could be in danger (e.g., fire or smoke is visible, dangerous road conditions or location), do not wait for voice contact from a 9-1-1 operator. All occupants should exit the vehicle immediately and move to a safe location.**
- **The 9-1-1 Call system is embedded into the vehicle's electrical system. Do not add aftermarket electrical equipment to the vehicle's electrical system. This may prevent your vehicle from sending a signal to initiate an emergency call. To avoid interference that can cause the 9-1-1 Call system to fail, never add aftermarket equipment (e.g., two-way mobile radio, CB radio, data recorder, etc.) to your vehicle's electrical system or modify the antennas on your vehicle.**

(Continued)

WARNING! *(Continued)*

- **Modifications to any part of the 9-1-1 Call system could cause the air bag system to fail when you need it. You could be injured if the air bag system is not there to help protect you.**

9-1-1 Call System Limitations

Vehicles sold in Canada and Mexico **DO NOT** have 9-1-1 Call system capabilities.

9-1-1 or other emergency line operators in Canada and Mexico may not answer or respond to 9-1-1 system calls.

If the 9-1-1 Call system detects a malfunction, any of the following may occur at the time the malfunction is detected, and at the beginning of each ignition cycle:

- The Rearview Mirror light located between the Assist and 9-1-1 buttons will continuously be illuminated red;

- The Phone Screen will display the following message "Vehicle phone requires service. Please contact your dealer."; and,
- An In-Vehicle Audio message will state "Vehicle phone requires service. Please contact your dealer."

WARNING!

- **Ignoring the Rearview Mirror light could mean you will not have 9-1-1 Call services. If the Rearview Mirror light is illuminated, have an authorized dealer service the 9-1-1 Call system immediately.**
- **The ORC turns on the Air Bag Warning Light on the instrument panel if a malfunction in any part of the system is detected. If the Air Bag Warning Light is illuminated, have an authorized dealer service the ORC system immediately.**

Even if the 9-1-1 Call system is fully functional, factors beyond Chrysler Group LLC's control may prevent or stop the 9-1-1 Call system operation. These include, but are not limited to, the following factors:

- The ignition key has been removed from the ignition and the delayed accessories mode is active;
- The ignition key is in OFF position;
- The vehicle's electrical systems are not intact;
- The 9-1-1 Call system software and/or hardware are damaged during a crash;
- The vehicle battery loses power or becomes disconnected during a vehicle crash;
- Wireless and/or Global Positioning Satellite signals are unavailable or obstructed;

- Equipment malfunction at the 9-1-1 operator facility;
- Operator error by the 9-1-1 operator;
- Wireless network congestion;
- Weather; and
- Buildings, structures, geographic terrain, or tunnels.

NOTE: Never place anything on or near the vehicle's wireless and GPS antennas. You could prevent wireless and GPS signal reception, which can prevent your vehicle from placing an emergency call. Wireless and GPS signal reception is required for the 9-1-1 Call system to function properly.

General Information

This device complies with Part 15 of the FCC Rules. Operation is subject to the following two conditions: (1) This device may not cause harmful interference, and (2) this device must accept any interference received, including interference that may cause undesired operation.

If A Deployment Occurs

The Advanced Front Air Bags are designed to deflate immediately after deployment.

NOTE: Front and/or side air bags will not deploy in all collisions. This does not mean something is wrong with the air bag system.

If you do have a collision which deploys the air bags, any or all of the following may occur:

- The nylon air bag material may sometimes cause abrasions and/or skin reddening to the driver and front passenger as the air bags deploy and unfold. The abrasions are similar to friction rope burns or those you might get sliding along a carpet or gymnasium floor. They are not caused by contact with chemicals. They are not permanent and normally heal quickly. However, if you haven't healed significantly within a few days, or if you have any blistering, see your doctor immediately.
- As the air bags deflate, you may see some smoke-like particles. The particles are a normal by-product of the process that generates the non-toxic gas used for air bag inflation. These airborne particles may irritate the skin, eyes, nose, or throat. If you have skin or eye irritation, rinse the area with cool water. For nose or throat irritation, move to fresh air. If the irritation continues, see your doctor. If these particles settle on your clothing, follow the garment manufacturer's instructions for cleaning.

Do not drive your vehicle after the air bags have deployed. If you are involved in another collision, the air bags will not be in place to protect you.

WARNING!

Deployed air bags and seat belt pretensioners cannot protect you in another collision. Have the air bags, seat belt pretensioners, and the front seat belt retractor assemblies replaced by an authorized dealer immediately. Also, have the Occupant Restraint Controller (ORC) system serviced as well.

Maintaining Your Air Bag System

WARNING!

- **Modifications to any part of the air bag system could cause it to fail when you need it. You could be injured if the air bag system is not there to protect you. Do not modify the components or wiring, including adding any kind of badges or stickers to the steering wheel hub trim cover or the upper right side of the instrument panel. Do not modify the front bumper, vehicle body structure, or add aftermarket side steps or running boards.**
- **It is dangerous to try to repair any part of the air bag system yourself. Be sure to tell anyone who works on your vehicle that it has an air bag system.**

(Continued)

WARNING! ***(Continued)***

- **Do not attempt to modify any part of your air bag system. The air bag may inflate accidentally or may not function properly if modifications are made. Take your vehicle to an authorized dealer for any air bag system service. If your seat, including your trim cover and cushion, needs to be serviced in any way (including removal or loosening/tightening of seat attachment bolts), take the vehicle to your authorized dealer. Only manufacturer approved seat accessories may be used. If it is necessary to modify the air bag system for persons with disabilities, contact your authorized dealer.**

Air Bag Warning Light

You will want to have the air bags ready to inflate for your protection in a collision. The Air Bag Warning Light monitors the internal circuits and interconnecting wiring associated with air bag system electrical components. While the air bag system is designed to be maintenance free, if any of the following occurs, have an authorized dealer service the air bag system immediately.

- The Air Bag Warning Light does not come on during the four to eight seconds when the ignition switch is first turned to the ON/RUN position.
- The Air Bag Warning Light remains on after the four to eight-second interval.
- The Air Bag Warning Light comes on intermittently or remains on while driving.

NOTE: If the speedometer, tachometer, or any engine related gauges are not working, the Occupant Restraint Controller (ORC) may also be disabled. The air bags may not be ready to inflate for your protection. Promptly check the fuse block for blown fuses. Refer to the label located on the inside of the fuse block cover for the proper air bag fuses. See your authorized dealer if the fuse is good.

Event Data Recorder (EDR)

This vehicle is equipped with an event data recorder (EDR). The main purpose of an EDR is to record, in certain crash or near crash-like situations, such as an air bag deployment or hitting a road obstacle, data that will assist in understanding how a vehicle's systems performed. The EDR is designed to record data related to vehicle dynamics and safety systems for a short period of time, typically 30 seconds or less. The EDR in this vehicle is designed to record such data as:

- How various systems in your vehicle were operating;
- Whether or not the driver and passenger safety belts were buckled/fastened;
- How far (if at all) the driver was depressing the accelerator and/or brake pedal; and,
- How fast the vehicle was traveling.

These data can help provide a better understanding of the circumstances in which crashes and injuries occur.

NOTE: EDR data are recorded by your vehicle only if a non-trivial crash situation occurs; no data are recorded by the EDR under normal driving conditions and no personal data (e.g., name, gender, age, and crash location) are recorded. However, other parties, such as law enforcement, could combine the EDR data with the type of personally identifying data routinely acquired during a crash investigation.

To read data recorded by an EDR, special equipment is required, and access to the vehicle or the EDR is needed. In addition to the vehicle manufacturer, other parties, such as law enforcement, that have the special equipment, can read the information if they have access to the vehicle or the EDR.

Child Restraints

Everyone in your vehicle needs to be buckled up at all times, including babies and children. Every state in the United States, and every Canadian province, requires that small children ride in proper restraint systems. This is the law, and you can be prosecuted for ignoring it.

Children 12 years or younger should ride properly buckled up in a rear seat, if available. According to crash statistics, children are safer when properly restrained in the rear seats rather than in the front.

There are different sizes and types of restraints for children from newborn size to the child almost large enough for an adult safety belt. Always check the child seat Owner's Manual to make sure you have the correct seat for your child.

Before buying any restraint system, make sure that it has a label certifying that it meets all applicable Safety Standards. You should also make sure that you can install it in the vehicle where you will use it.

NOTE: For additional information, refer to www.seatcheck.org or call 1–866–SEATCHECK. Canadian residents should refer to Transport Canada's website for additional information: http://www.tc.gc.ca/eng/roadsafety/safedrivers-childsafety-index-53.htm

WARNING!

In a collision, an unrestrained child can become a projectile inside the vehicle. The force required to hold even an infant on your lap could become so great that you could not hold the child, no matter how strong you are. The child and others could be badly injured. Any child riding in your vehicle should be in a proper restraint for the child's size.

Summary Of Recommendations For Restraining Children In Vehicles

	Child Size, Height, Weight or Age	Recommended Type of Child Restraint
Infants and Toddlers	Children who are two years old or younger and who have not reached the height or weight limits of their child restraint	Either an Infant Carrier or a Convertible Child Restraint, facing rearward in the rear seat of the vehicle
Small Children	Children who are at least two years old or who have out-grown the height or weight limit of their rear-facing child restraint	Forward-Facing Child Restraint with a five-point Harness, facing forward in the rear seat of the vehicle
Larger Children	Children who have out-grown their forward-facing child restraint, but are too small to properly fit the vehicle's seat belt	Belt Positioning Booster Seat and the vehicle seat belt, seated in the rear seat of the vehicle
Children Too Large for Child Restraints	Children 12 years old or younger, who have out-grown the height or weight limit of their booster seat	Vehicle Seat Belt, seated in the rear seat of the vehicle

Infants And Child Restraints

Safety experts recommend that children ride rearward-facing in the vehicle until they are two years old or until they reach either the height or weight limit of their rear facing child safety seat. Two types of child restraints can be used rearward-facing: infant carriers and convertible child seats.

The infant carrier is only used rearward-facing in the vehicle. It is recommended for children from birth until they reach the weight or height limit of the infant carrier. Convertible child seats can be used either rearward-facing or forward-facing in the vehicle. Convertible child seats often have a higher weight limit in the rearward-facing direction than infant carriers do, so they can be used rearward-facing by children who have outgrown their infant carrier but are still less than at least two years old. Children should remain rearward-facing until they reach the highest weight or height allowed by their convertible child seat.

WARNING!

- **Never place a rear facing infant seat in front of an air bag. A deploying passenger Advanced Front Air Bag can cause death or serious injury to a child 12 years or younger, including a child in a rearward facing infant seat.**
- **Only use a rearward-facing child restraint in a rear seat.**

Older Children And Child Restraints

Children who are two years old or who have outgrown their rear-facing convertible child seat can ride forward-facing in the vehicle. Forward-facing child seats and convertible child seats used in the forward-facing direction are for children who are over two years old or who have outgrown the rear-facing weight or height limit of their rear-facing convertible child seat. Children should remain in a forward-facing child seat with a harness for as long as possible, up to the highest weight or height allowed by the child seat.

All children whose weight or height is above the forward-facing limit for the child seat should use a belt-positioning booster seat until the vehicle's seat belts fit properly. If the child cannot sit with knees bent over the vehicle's seat cushion while the child's back is against the seatback, they should use a belt-positioning booster seat. The child and belt-positioning booster seat are held in the vehicle by the seat belt.

WARNING!

- **Improper installation can lead to failure of an infant or child restraint. It could come loose in a collision. The child could be badly injured or killed. Follow the child restraint manufacturer's directions exactly when installing an infant or child restraint.**
- **When your child restraint is not in use, secure it in the vehicle with the seat belt or LATCH anchorages, or remove it from the vehicle. Do not leave it loose in the vehicle. In a sudden stop or accident, it could strike the occupants or seatbacks and cause serious personal injury.**

Children Too Large For Booster Seats

Children who are large enough to wear the shoulder belt comfortably, and whose legs are long enough to bend over the front of the seat when their back is against the seatback, should use the seat belt in a rear seat. Use this simple 5-step test to decide whether the child can use the vehicle's seat belt alone:

1. Can the child sit all the way back against the back of the vehicle seat?
2. Do the child's knees bend comfortably over the front of the vehicle seat – while they are still sitting all the way back?
3. Does the shoulder belt cross the child's shoulder between their neck and arm?
4. Is the lap part of the belt as low as possible, touching the child's thighs and not their stomach?
5. Can the child stay seated like this for the whole trip?

If the answer to any of these questions was "no," then the child still needs to use a booster seat in this vehicle. If the child is using the lap/shoulder belt, check belt fit periodically. A child's squirming or slouching can move the belt out of position. If the shoulder belt contacts the face or neck, move the child closer to the center of the vehicle. Never allow a child to put the shoulder belt under an arm or behind their back.

Recommendations For Attaching Child Restraints — Quad Cab®/Crew Cab

Restraint Type	Combined Weight of the Child + Child Restraint	Use any attachment method shown with an "X" Below			
		LATCH – Lower Anchors Only	Seat Belt Only	LATCH – Lower Anchors + Top Tether Anchor	Seat Belt + Top Tether Anchor
Rear-Facing Child Restraint	Up to 65 lbs (29.5 kg)	X	X		
Rear-Facing Child Restraint	More than 65 lbs (29.5 kg)		X		
Forward-Facing Child Restraint	Up to 65 lbs (29.5 kg)			X	X
Forward-Facing Child Restraint	More than 65 lbs (29.5 kg)				X

Recommendations For Attaching Child Restraints — Standard Cab, Mega Cab®

Restraint Type	Combined Weight of the Child + Child Restraint	Use any attachment method shown with an "X" Below			
		LATCH – Lower Anchors Only	Seat Belt Only	LATCH – Lower Anchors + Top Tether Anchor	Seat Belt + Top Tether Anchor
Rear-Facing Child Restraint	Up to 65 lbs (29.5 kg)	X	X		
Rear-Facing Child Restraint	More than 65 lbs (29.5 kg)		X		
Forward-Facing Child Restraint	Up to 65 lbs (29.5 kg)			X	X
Forward-Facing Child Restraint	More than 65 lbs (29.5 kg)		X		

Lower Anchors and Tethers for Children (LATCH) Restraint System

022668173

Your vehicle is equipped with the child restraint anchorage system called LATCH, which stands for Lower Anchors and Tethers for CHildren. The LATCH system has three vehicle anchor points for installing LATCH-equipped child seats. There are two lower anchorages located at the back of the seat cushion where it meets the seatback and one top tether anchorage located behind the

seating position. These anchorages are used to install LATCH-equipped child seats without using the vehicle's seat belts. Some seating positions may have a top tether anchorage but no lower anchorages. In these seating positions, the seat belt must be used with the top tether anchorage to install the child restraint. Please see the following table for more information.

LATCH Positions For Installing Child Restraints In This Vehicle

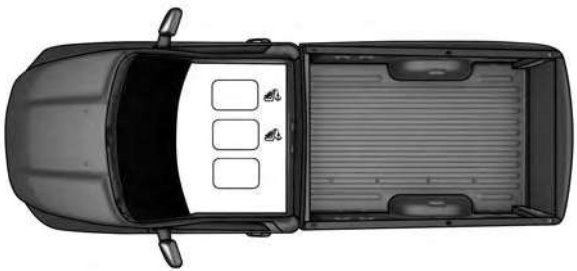

0226003585

Standard Cab

Lower Anchorage Symbol 2 anchorages per seating position

Top Tether Anchorage Symbol

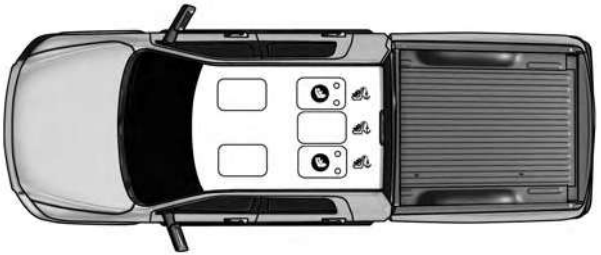

0226003587

Quad Cab®/Crew Cab Full Bench

Lower Anchorage Symbol 2 anchorages per seating position

Top Tether Anchorage Symbol

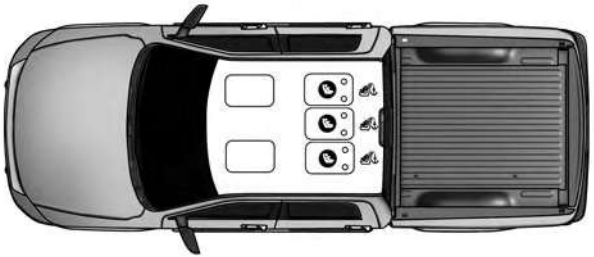

0226003588

Quad Cab®/Mega Cab®/Crew Cab Split Bench

Lower Anchorage Symbol 2 anchorages per seating position

Top Tether Anchorage Symbol

Quad Cab®/Crew Cab

What is the weight limit (child's weight + weight of the child restraint) for using the LATCH anchorage system to attach the child restraint?	65 lbs (29.5 kg)	Use the LATCH anchorage system until the combined weight of the child and the child restraint is 65 lbs (29.5 kg). Use the seat belt and tether anchor instead of the LATCH system once the combined weight is more than 65 lbs (29.5 kg).
Can the LATCH anchorages and the seat belt be used together to attach a rear-facing or forward-facing child restraint?	No	Do not use the seat belt when you use the LATCH anchorage system to attach a rear-facing or forward-facing child restraint.
Can a child seat be installed in the center position using the inner LATCH lower anchorages (Full Bench Only) ?	No	Use the seat belt and tether anchor to install a child seat in the center seating position in vehicles equipped with a Full Bench rear seat.

Can two child restraints be attached using a common lower LATCH anchorage?	No	Never “share” a LATCH anchorage with two or more child restraints. If the center position does not have dedicated LATCH lower anchorages, use the seat belt to install a child seat in the center position next to a child seat using the LATCH anchorages in an outboard position.
Can the rear-facing child restraint touch the back of the front passenger seat?	Yes	The child seat may touch the back of the front passenger seat if the child restraint manufacturer also allows contact. See your child restraint owner’s manual for more information.
Can the head restraints be removed?	No	

Mega Cab®/Standard Cab

What is the weight limit (child's weight + weight of the child restraint) for using the LATCH anchorage system to attach the child restraint?	65 lbs (29.5 kg)	Use the LATCH anchorage system until the combined weight of the child and the child restraint is 65 lbs (29.5 kg). Use the seat belt alone instead of the LATCH anchorage system once the combined weight is more than 65 lbs (29.5 kg).
Can the LATCH anchorages and the seat belt be used together to attach a rear-facing or forward-facing child restraint?	No	Do not use the seat belt when you use the LATCH anchorage system to attach a rear-facing or forward-facing child restraint.

Can two child restraints be attached using a common lower LATCH anchorage?	No	Never “share” a LATCH anchorage with two or more child restraints. If the center position does not have dedicated LATCH lower anchorages, use the seat belt to install a child seat in the center position next to a child seat using the LATCH anchorages in an outboard position.
Can the rear-facing child restraint touch the back of the front passenger seat?	Yes	The child seat may touch the back of the front passenger seat if the child restraint manufacturer also allows contact. See your child restraint owner’s manual for more information.
Can the head restraints be removed?	No	

Locating The LATCH Anchorages — Quad Cab®/Mega Cab®/Crew Cab

The lower anchorages are round bars that are found at the rear of the seat cushion where it meets the seatback. They are just visible when you lean into the rear seat to install the child restraint. You will easily feel them if you run your finger along the gap between the seatback and seat cushion.

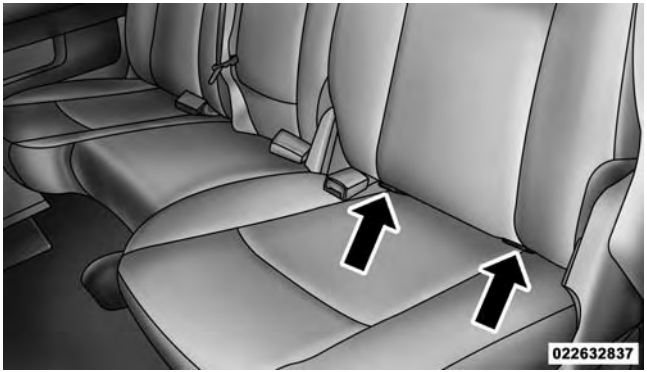

Quad Cab®/Mega Cab®/Crew Cab Rear Outboard Seats Driver Side

Locating The LATCH Anchorages

In addition, Regular Cab models have tether strap anchorages behind the front center and right seats. Quad Cab®, Mega Cab® and Crew Cab models have tether strap anchorages located behind each of the rear seats.

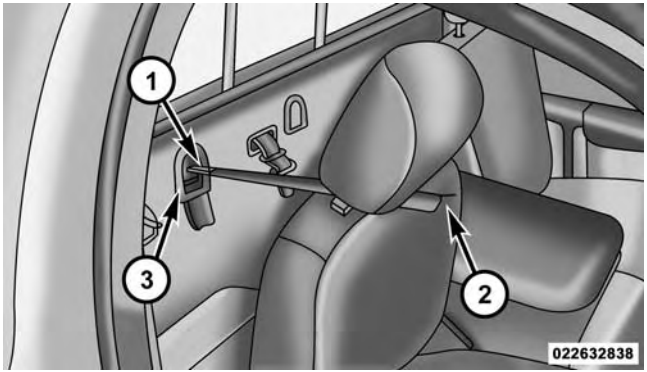

Regular Cab Tether Strap Mounting

1 — Tether Strap Hook
2 — Tether Strap to Child Restraint
3 — Tether Anchor

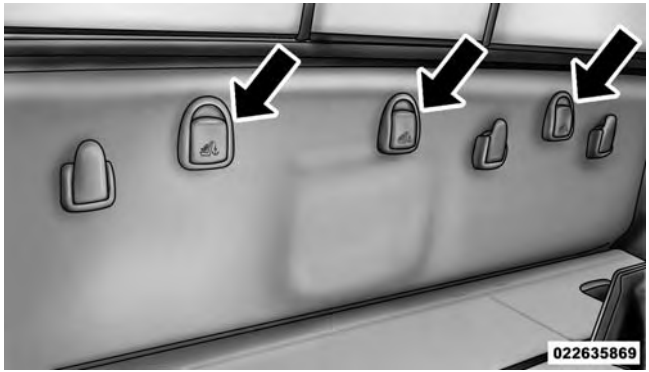

Mega Cab® Tether Strap Mounting (Behind Covers)

LATCH-compatible child restraint systems will be equipped with a rigid bar or a flexible strap on each side. Each will have a hook or connector to attach to the lower anchorage and a way to tighten the connection to the anchorage. Forward-facing child restraints and some rear-facing infant restraints will also be equipped with a tether strap. The tether strap will have a hook at the end to attach to the top tether anchorage and a way to tighten the strap after it is attached to the anchorage.

Center Seat LATCH — Standard Cab/Quad Cab®/Crew Cab Full Bench

Do not install a child restraint in the center position using the LATCH system. Use the seat belt and tether anchor to install a child seat in the center seating position.

WARNING!

Never use the same lower anchorage to attach more than one child restraint. Please refer to "Installing The LATCH-Compatible Child Restraint System" for typical installation instructions.

Always follow the directions of the child restraint manufacturer when installing your child restraint. Not all child restraint systems will be installed as described here.

Center Seat LATCH — Quad Cab®/Mega Cab®/Crew Cab Split Bench

If a child restraint installed in the center position blocks the seat belt webbing or buckle for the outboard position, do not use that outboard position. If a child seat in the center position blocks the outboard LATCH anchors or seat belt, do not install a child seat in that outboard position.

WARNING!

Never use the same lower anchorage to attach more than one child restraint. Please refer to "Installing The LATCH-Compatible Child Restraint System" for typical installation instructions.

Always follow the directions of the child restraint manufacturer when installing your child restraint. Not all child restraint systems will be installed as described here.

To Install A LATCH-compatible Child Restraint

1. If the selected seating position has a Switchable Automatic Locking Retractor (ALR) seat belt, stow the seat belt, following the instructions below. See the section "Installing Child Restraints Using the Vehicle Seat Belt" to check what type of seat belt each seating position has.
2. Loosen the adjusters on the lower straps and on the tether strap of the child seat so that you can more easily attach the hooks or connectors to the vehicle anchorages.
3. Place the child seat between the lower anchorages for that seating position. For some second row seats, you may need to recline the seat and / or raise the head restraint to get a better fit.

4. Attach the lower hooks or connectors of the child restraint to the lower anchorages in the selected seating position.
5. If the child restraint has a tether strap, connect it to the top tether anchorage. See the section "Installing Child Restraints Using the Top Tether Anchorage" for directions to attach a tether anchor.
6. Tighten all of the straps as you push the child restraint rearward and downward into the seat. Remove slack in the straps according to the child restraint manufacturer's instructions.
7. Test that the child restraint is installed tightly by pulling back and forth on the child seat at the belt path. It should not move more than 1 inch (25.4 mm) in any direction.

How To Stow An Unused ALR Seatbelt

When using the LATCH attaching system to install a child restraint, stow all ALR seat belts that are not being used by other occupants or being used to secure child restraints. An unused belt could injure a child if they play with it and accidentally lock the seatbelt retractor. Before installing a child restraint using the LATCH system, buckle the seat belt behind the child restraint and out of the child's reach. If the buckled seat belt interferes with the child restraint installation, instead of buckling it behind the child restraint, route the seat belt through the child restraint belt path and then buckle it. Do not lock the seatbelt. Remind all children in the vehicle that the seat belts are not toys and that they should not play with them.

WARNING!

Improper installation of a child restraint to the LATCH anchorages can lead to failure of the restraint. The child could be badly injured or killed. Follow the child restraint manufacturer's directions exactly when installing an infant or child restraint.

Installing Child Restraints Using The Vehicle Seat Belt

The seat belts in the passenger seating positions are equipped with either a Switchable Automatic Locking Retractor (ALR) or a cinching latch plate or both. Both types of seat belts are designed to keep the lap portion of the seat belt tight around the child restraint so that it is not necessary to use a locking clip. The ALR retractor can be "switched" into a locked mode by pulling all of the webbing out of the retractor and then letting the webbing retract back into the retractor. If it is locked, the ALR will make a clicking noise while the webbing is pulled back into the retractor. For additional information on ALR, refer to the "Automatic Locking Mode" description under "Occupant Restraints." The cinching latch plate is designed to hold the lap portion of the seatbelt tight when webbing is pulled tight and straight through a child restraint's belt path. Please see the table below and the following sections for more information about both types of seat belts.

Lap/Shoulder Belt Systems for Installing Child Restraints in this Vehicle

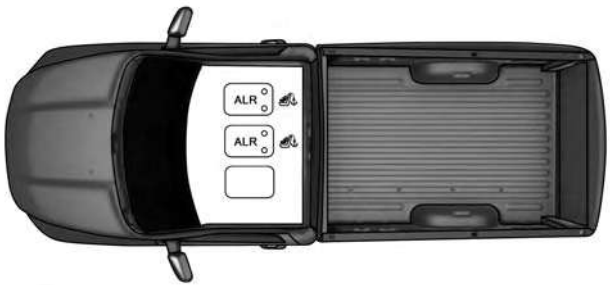

022670224

Standard Cab

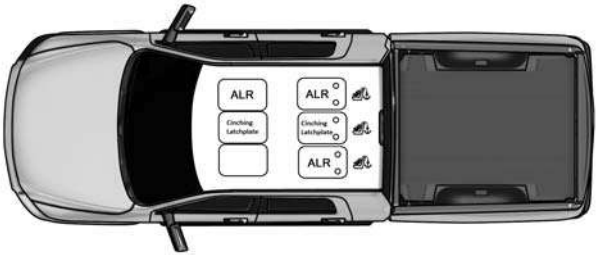

022670220

Quad Cab®/Mega Cab®/Crew Cab

Quad Cab®/Crew Cab

What is the weight limit (child's weight + weight of the child restraint) for using the Tether Anchor with the seat belt to attach a forward facing child restraint?	Weight limit of the Child Restraint	Always use the tether anchor when using the seat belt to install a forward facing child restraint, up to the recommended weight limit of the child restraint.
Can the rear-facing child restraint touch the back of the front passenger seat?	Yes	Contact between the front passenger seat and the child restraint is allowed, if the child restraint manufacturer also allows contact.
Can the head restraints be removed?	No	
Can the buckle stalk be twisted to tighten the seat belt against the belt path of the child restraint?	Yes	In positions with cinching latch plates (CINCH), the buckle stalk may be twisted up to 3 full turns. Do not twist the buckle stalk in a seating position with an ALR retractor.

Mega Cab®/Standard Cab

What is the weight limit (child's weight + weight of the child restraint) for using the Tether Anchor with the seat belt to attach a forward facing child restraint?	65 lbs (29.5 kg)	The Tether Anchor can be used with the seat belt until the combined weight of the child and the child restraint is 65 lbs (29.5 kg). Use the seat belt without the Tether Anchor once the combined weight is more than 65 lbs (29.5 kg).
Can the rear-facing child restraint touch the back of the front passenger seat?	Yes	Contact between the front passenger seat and the child restraint is allowed, if the child restraint manufacturer also allows contact.
Can the head restraints be removed?	No	
Can the buckle stalk be twisted to tighten the seat belt against the belt path of the child restraint?	Yes	In positions with cinching latch plates (CINCH), the buckle stalk may be twisted up to 3 full turns. Do not twist the buckle stalk in a seating position with an ALR retractor.

Installing A Child Restraint with a Switchable Automatic Locking Retractor (ALR)

1. Place the child seat in the center of the seating position. For some second row seats, you may need to recline the seat and/or raise the head restraint to get a better fit.
2. Pull enough of the seat belt webbing from the retractor to pass it through the belt path of the child restraint. Do not twist the belt webbing in the belt path.
3. Slide the latch plate into the buckle until you hear a "click."
4. Pull on the webbing to make the lap portion tight against the child seat.
5. To lock the seat belt, pull down on the shoulder part of the belt until you have pulled all the seat belt webbing out of the retractor. Then, allow the webbing to retract back into the retractor. As the webbing retracts, you will hear a clicking sound. This means the seat belt is now in the Automatic Locking mode.
6. Try to pull the webbing out of the retractor. If it is locked, you should not be able to pull out any webbing. If the retractor is not locked, repeat step 5.
7. Finally, pull up on any excess webbing to tighten the lap portion around the child restraint while you push the child restraint rearward and downward into the vehicle seat.

8. If the child restraint has a top tether strap and the seating position has a top tether anchorage, connect the tether strap to the anchorage and tighten the tether strap. Refer to "Lower Anchors and Tethers for Children (LATCH) Restraint System" for directions to attach a tether anchor.

9. Test that the child restraint is installed tightly by pulling back and forth on the child seat at the belt path. It should not move more than 1 inch (25.4 mm) in any direction.

Any seat belt system will loosen with time, so check the belt occasionally, and pull it tight if necessary.

Installing A Child Restraint With A Cinching Latch Plate (CINCH) — If Equipped

1. Place the child seat in the center of the seating position. For some second row seats, you may need to recline the seat and / or raise the head restraint to get a better fit.

2. Next, pull enough of the seat belt webbing from the retractor to pass it through the belt path of the child restraint. Do not twist the belt webbing in the belt path.

3. Slide the latch plate into the buckle until you hear a "click."

4. Finally, pull up on any excess webbing to tighten the lap portion around the child restraint while you push the child restraint rearward and downward into the vehicle seat.

5. If the child restraint has a top tether strap and the seating position has a top tether anchorage, connect the tether strap to the anchorage and tighten the tether strap. Refer to "Lower Anchors and Tethers for Children (LATCH) Restraint System" for directions to attach a tether anchor.
6. Test that the child restraint is installed tightly by pulling back and forth on the child seat at the belt path. It should not move more than 1 inch (25.4 mm) in any direction.

Any seat belt system will loosen with time, so check the belt occasionally, and pull it tight if necessary.

If the buckle or the cinching latch plate is too close to the belt path opening of the child restraint, you may have trouble tightening the seat belt. If this happens, disconnect the latch plate from the buckle and twist the short buckle-end belt up to three full turns to shorten it. Insert the latch plate into the buckle with the release button facing out, away from the child restraint. Repeat steps 4 to 6, above, to complete the installation of the child restraint.

If the belt still cannot be tightened after you shorten the buckle, disconnect the latch plate from the buckle, turn the buckle around one half turn, and insert the latch plate into the buckle again. If you still cannot make the child restraint installation tight, try a different seating position.

Installing Child Restraints Using The Top Tether Anchorage

Regular and Mega Cab® Trucks: In the regular cab truck, the top tether anchorages are located behind the center and right passenger seats. In the mega cab truck, the top tether anchorages are located behind each rear seating position. There is a plastic cover over each anchorage. To attach the tether strap of the child restraint:

1. Place the child restraint on the seat and adjust the tether strap so that it will reach over the seat back, under the head restraint and to the tether anchor directly behind the seat.

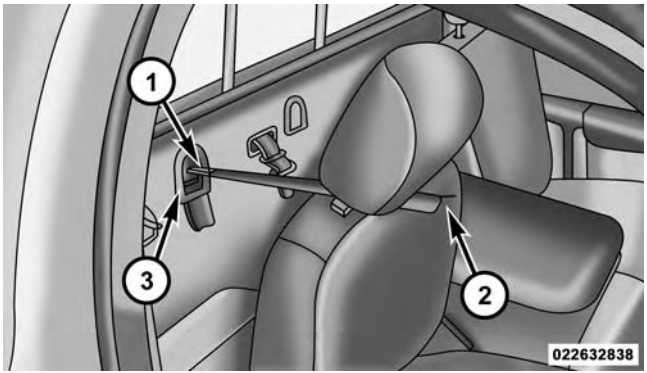

Regular Cab Tether Strap Mounting

1 — Tether Strap Hook
2 — Tether Strap to Child Restraint
3 — Tether Anchor

2. Route the tether strap to provide the most direct path between the anchorage and the child seat. The tether strap should go between the head restraint posts underneath the head restraint. You may need to adjust the head restraint to the upward position to pass the tether strap underneath the head restraint and between its posts.

3. Lift the cover (if so equipped), and attach the hook to the square opening in the sheet metal. Tighten the tether strap according to the child seat manufacturer's instructions.

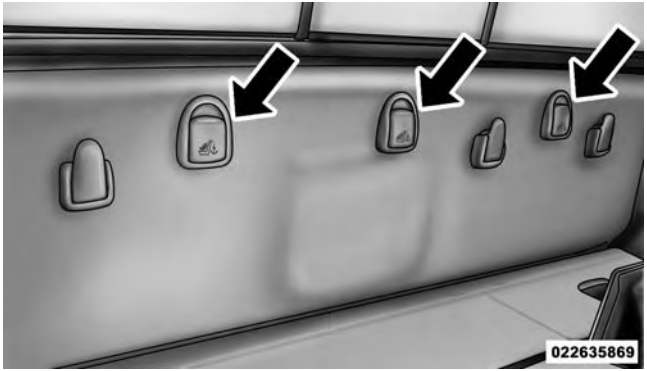

Mega Cab® Tether Strap Mounting

WARNING!

Never place a rear facing infant seat in front of an air bag. A deploying passenger Advanced Front Air Bag can cause death or serious injury to a child 12 years or younger, including a child in a rearward facing infant seat.

Quad Cab® or Crew Cab Trucks: The top tether anchorages in this vehicle are tether strap loops located between the rear glass and the back of the rear seat. There is a tether strap loop located behind each seating position. Follow the steps below to attach the tether strap of the child restraint.

Right or Left Outboard Seats:

1. Raise the head restraint and reach between the rear seat and rear glass to access the tether strap loop.

Head Restraint In Raised Position

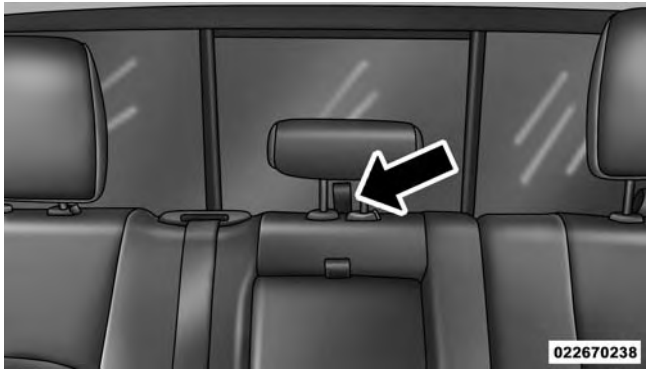

Tether Strap Loop With Center Head Restraint In Raised Position

2. Place a child restraint on the seat and adjust the tether strap so that it will reach over the seat back, under the head restraint, through the tether strap loop behind the seat and over to the tether strap loop behind the center seat.
3. Pass the tether strap hook under the head restraint behind the child seat, though the tether strap loop behind the seat and over to the center tether strap loop.

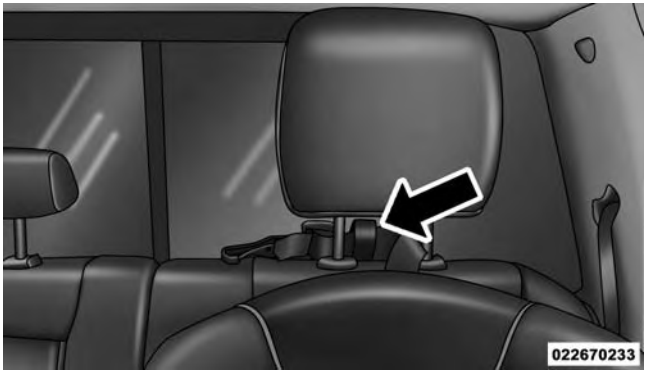

Tether Strap Through Outboard Tether Strap Loop

4. Attach the hook to the center tether strap loop (see diagram). Tighten the tether strap according to the child seat manufacturer's instructions.

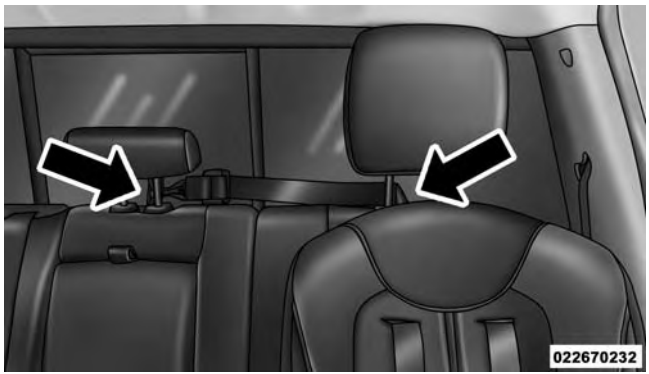

Tether Strap Through Outboard Tether Strap Loop And Attached To Center Tether Strap Loop

NOTE: If there are child seats in both of the outboard (left and right) seating positions, the tether strap hooks of both child seats should be connected to the center tether strap loop. This is the correct way to tether two outboard child seats.

Center Seat:

1. Raise the head restraint and reach between the rear seat and rear glass to access the tether strap loop.

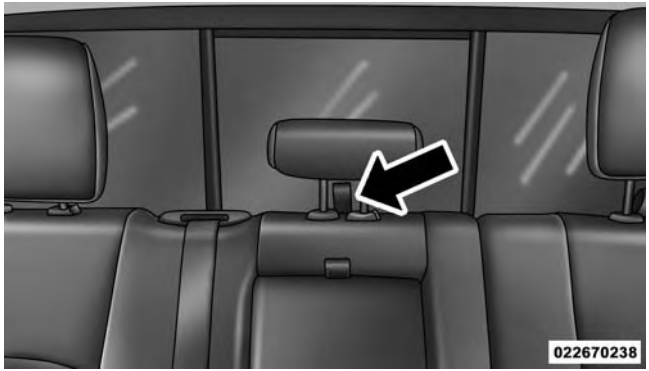

Tether Strap Loop With Head Restraint In Raised Position

2. Place a child restraint on the seat and adjust the tether strap so that it will reach over the seat back, under the head restraint, through the tether strap loop behind the seat and over to the tether strap loop behind either the right or left outboard seat.
3. Pass the tether strap hook under the head restraint behind the child seat, though the tether strap loop behind the seat and over to the right or left outboard tether strap loop.

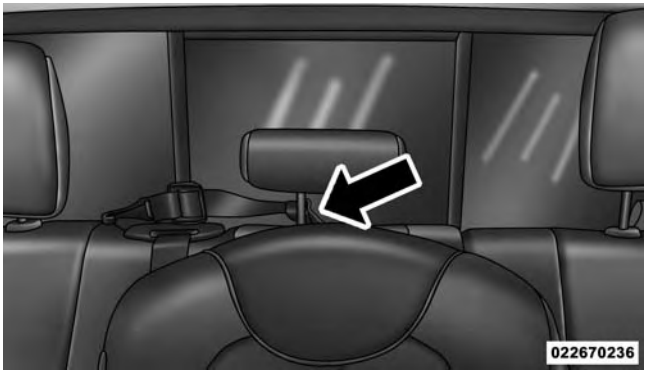

Tether Strap Through Center Tether Strap Loop

4. Attach the hook to the outboard tether strap loop (see diagram). Tighten the tether strap according to the child seat manufacturer's instructions.

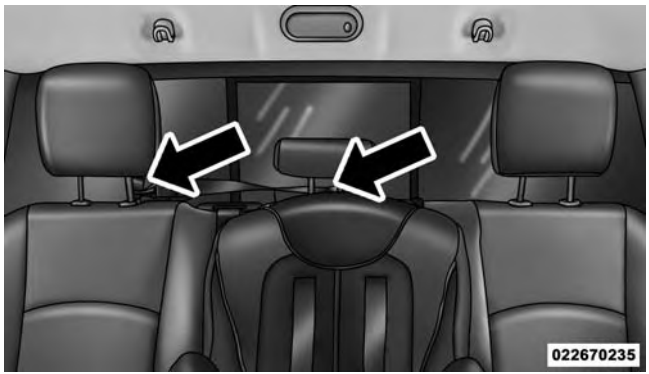

Tether Strap Through Center Tether Strap Loop And Attached To Outboard Tether Strap Loop

Installing Three Child Restraints:

1. Place a child restraint on each outboard rear seat. Route the tether straps following the directions for right and left seating positions, above.
2. Attach both hooks to the center tether strap loop, but do not tighten the straps yet.
3. Place a child restraint on the center rear seat. Route the tether strap following the directions for the center seating position, above.
4. Attach the hook to the outboard tether strap loop.
5. Tighten the tether straps according to the child seat manufacturer's instructions, tightening the right and left tether straps before the center tether strap.

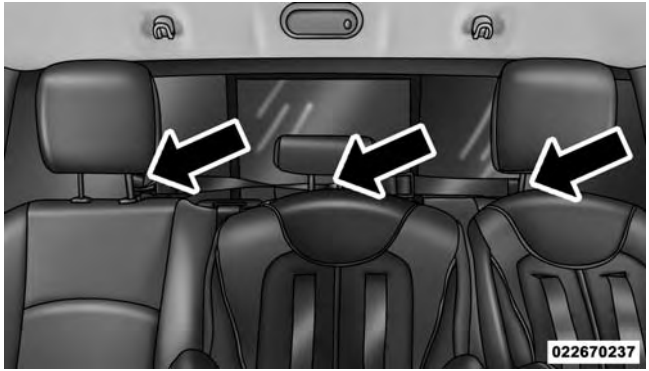

Left Outboard And Center Seating Position Shown

WARNING!

- **An incorrectly anchored tether strap could lead to increased head motion and possible injury to the child. Use only the anchorage position directly behind the child seat to secure a child restraint top tether strap.**
- **If your vehicle is equipped with a split rear seat, make sure the tether strap does not slip into the opening between the seatbacks as you remove slack in the strap.**

Transporting Pets

Air Bags deploying in the front seat could harm your pet. An unrestrained pet will be thrown about and possibly injured, or injure a passenger during panic braking or in a collision.

Pets should be restrained in the rear seat in pet harnesses or pet carriers that are secured by seat belts.

ENGINE BREAK-IN RECOMMENDATIONS

A long break-in period is not required for the engine and drivetrain (transmission and axle) in your vehicle.

Drive moderately during the first 300 miles (500 km). After the initial 60 miles (100 km), speeds up to 50 or 55 mph (80 or 90 km/h) are desirable.

While cruising, brief full-throttle acceleration within the limits of local traffic laws contributes to a good break-in. Wide-open throttle acceleration in low gear can be detrimental and should be avoided.

The engine oil installed in the engine at the factory is a high-quality energy conserving type lubricant. Oil changes should be consistent with anticipated climate conditions under which vehicle operations will occur. For the recommended viscosity and quality grades, refer to “Maintenance Procedures” in “Maintaining Your Vehicle”.

CAUTION!

Never use Non-Detergent Oil or Straight Mineral Oil in the engine or damage may result.

NOTE: A new engine may consume some oil during its first few thousand miles (kilometers) of operation. This should be considered a normal part of the break-in and not interpreted as an indication of difficulty.

SAFETY TIPS

Transporting Passengers

NEVER TRANSPORT PASSENGERS IN THE CARGO AREA.

WARNING!

- **Do not leave children or animals inside parked vehicles in hot weather. Interior heat build-up may cause serious injury or death.**

(Continued)

WARNING! ***(Continued)***

- **It is extremely dangerous to ride in a cargo area, inside or outside of a vehicle. In a collision, people riding in these areas are more likely to be seriously injured or killed.**
- **Do not allow people to ride in any area of your vehicle that is not equipped with seats and seat belts.**
- **Be sure everyone in your vehicle is in a seat and using a seat belt properly.**

Exhaust Gas

WARNING!

Exhaust gases can injure or kill. They contain carbon monoxide (CO), which is colorless and odorless. Breathing it can make you unconscious and can eventually poison you. To avoid breathing (CO), follow these safety tips:

- **Do not run the engine in a closed garage or in confined areas any longer than needed to move your vehicle in or out of the area.**
- **If you are required to drive with the trunk/liftgate open, make sure that all windows are closed and the climate control BLOWER switch is set at high speed. DO NOT use the recirculation mode.**

WARNING! ***(Continued)***

- **If it is necessary to sit in a parked vehicle with the engine running, adjust your heating or cooling controls to force outside air into the vehicle. Set the blower at high speed.**

The best protection against carbon monoxide entry into the vehicle body is a properly maintained engine exhaust system.

Whenever a change is noticed in the sound of the exhaust system, when exhaust fumes can be detected inside the vehicle, or when the underside or rear of the vehicle is damaged, have a competent mechanic inspect the complete exhaust system and adjacent body areas for broken, damaged, deteriorated, or mispositioned parts. Open seams or loose connections could permit exhaust fumes to seep into the passenger compartment. In addition, inspect the exhaust system each time the vehicle is raised for lubrication or oil change. Replace as required.

Safety Checks You Should Make Inside The Vehicle

Seat Belts

Inspect the belt system periodically, checking for cuts, frays, and loose parts. Damaged parts must be replaced immediately. Do not disassemble or modify the system.

Front seat belt assemblies must be replaced after a collision. Rear seat belt assemblies must be replaced after a collision if they have been damaged (i.e., bent retractor, torn webbing, etc.). If there is any question regarding belt or retractor condition, replace the belt.

Air Bag Warning Light

The light should come on and remain on for four to eight seconds as a bulb check when the ignition switch is first turned ON. If the light is not lit during starting, see your authorized dealer. If the light stays on, flickers, or comes on while driving, have the system checked by an authorized dealer.

Defroster

Check operation by selecting the defrost mode and place the blower control on high speed. You should be able to feel the air directed against the windshield. See your authorized dealer for service if your defroster is inoperable.

Floor Mat Safety Information

Always use floor mats designed to fit the footwell of your vehicle. Use only floor mats that leave the pedal area unobstructed and that are firmly secured so that they cannot slip out of position and interfere with the pedals or impair safe operation of your vehicle in other ways.

WARNING!

Pedals that cannot move freely can cause loss of vehicle control and increase the risk of serious personal injury.

- **Always make sure that floor mats are properly attached to the floor mat fasteners.**

(Continued)

WARNING! ***(Continued)***

- **Never place or install floor mats or other floor coverings in the vehicle that cannot be properly secured to prevent them from moving and interfering with the pedals or the ability to control the vehicle.**
- **Never put floor mats or other floor coverings on top of already installed floor mats. Additional floor mats and other coverings will reduce the size of the pedal area and interfere with the pedals.**
- **Check mounting of mats on a regular basis. Always properly reinstall and secure floor mats that have been removed for cleaning.**

(Continued)

WARNING! ***(Continued)***

- **Always make sure that objects cannot fall into the driver footwell while the vehicle is moving. Objects can become trapped under the brake pedal and accelerator pedal causing a loss of vehicle control.**
- **If required, mounting posts must be properly installed, if not equipped from the factory.**

Failure to properly follow floor mat installation or mounting can cause interference with the brake pedal and accelerator pedal operation causing loss of control of the vehicle.

Periodic Safety Checks You Should Make Outside The Vehicle

Tires

Examine tires for excessive tread wear and uneven wear patterns. Check for stones, nails, glass, or other objects lodged in the tread or sidewall. Inspect the tread for cuts and cracks. Inspect sidewalls for cuts, cracks and bulges. Check the wheel nuts for tightness. Check the tires (including spare) for proper cold inflation pressure.

Lights

Have someone observe the operation of brake lights and exterior lights while you work the controls. Check turn signal and high beam indicator lights on the instrument panel.

Door Latches

Check for positive closing, latching, and locking.

Fluid Leaks

Check area under vehicle after overnight parking for fuel, engine coolant, oil, or other fluid leaks. Also, if gasoline fumes are detected or if fuel, power steering fluid (if equipped), or brake fluid leaks are suspected, the cause should be located and corrected immediately.

UNDERSTANDING THE FEATURES OF YOUR VEHICLE

CONTENTS

■ MIRRORS 136

- □ Inside Day/Night Mirror 136
- □ Automatic Dimming Mirror — If Equipped . . .137
- □ Automatic Dimming Mirror With Rear View Camera Display — If Equipped 139
- □ Outside Mirrors 139
- □ Outside Mirrors Folding Feature 140
- □ Power Folding Outside Mirrors — If Equipped. 141
- □ Power Mirrors — If Equipped 142
- □ Heated Mirrors — If Equipped 144
- □ Driver's Outside Automatic Dimming Mirror — If Equipped 144
- □ Illuminated Vanity Mirror — If Equipped 144
- □ "Slide-On-Rod" Features Of Sun Visor — If Equipped. 145
- □ Trailer Towing Mirrors — If Equipped 146

■ SEATS 147

- □ Driver's Power Seat — If Equipped 147
- □ Passenger's Power Seat — If Equipped 150

- Power Lumbar — If Equipped 150
- Heated Seats — If Equipped 151
- Ventilated Seats — If Equipped 153
- Manual Seat Adjuster — If Equipped. 154
- 40-20-40 Front Bench Seat — If Equipped 156
- Mega Cab® Rear Seat Features 156
- Head Restraints 160

■ DRIVER MEMORY SEAT — IF EQUIPPED 162

- Programming The Memory Feature 163
- Linking And Unlinking The Remote Keyless Entry Transmitter To Memory 164
- Memory Position Recall 165

■ TO OPEN AND CLOSE THE HOOD 166

■ LIGHTS 168

- Headlights 169
- Automatic Headlights — If Equipped 169
- Headlights On With Wipers (Available With Automatic Headlights Only) 170
- Daytime Running Lights (DRL) — If Equipped 170
- Headlight Delay 170
- Automatic High Beam Headlamp Control — If Equipped 171
- Parking Lights And Panel Lights. 173
- Fog Lights — If Equipped 173

- Lights-On Reminder 174
- Battery Saver. 174
- Interior Lights 174
- Cargo Light 177
- Multifunction Lever 178
- Turn Signals 178
- Lane Change Assist 179
- Flash-To-Pass 179
- High/Low Beam Switch 179

■ WINDSHIELD WIPERS AND WASHERS 180
- Windshield Wipers 180
- Windshield Wiper Operation 180
- Intermittent Wiper System 180
- Windshield Washers 181
- Mist Feature 181
- Rain Sensing Wipers — If Equipped 182

■ TILT STEERING COLUMN 183

■ HEATED STEERING WHEEL — IF EQUIPPED 184

■ DRIVER ADJUSTABLE PEDALS — IF EQUIPPED 186

■ ELECTRONIC SPEED CONTROL 187
- To Activate 188
- To Set A Desired Speed 189
- To Deactivate 189
- To Resume Speed 189

- To Vary The Speed Setting 189
- To Accelerate For Passing 190

■ PARKSENSE® REAR PARK ASSIST — IF EQUIPPED 191

- ParkSense® Sensors 191
- ParkSense® Warning Display 192
- ParkSense® Display 192
- Enabling And Disabling ParkSense® 196
- Service The ParkSense® Rear Park Assist System 196
- Cleaning The ParkSense® System 197
- ParkSense® System Usage Precautions. 197

■ PARKSENSE® FRONT AND REAR PARK ASSIST — IF EQUIPPED 199

- ParkSense® Sensors 200
- ParkSense® Warning Display 201
- ParkSense® Display 201
- Enabling And Disabling Front And/Or Rear ParkSense® 203
- Service The ParkSense® Park Assist System . . .204
- Cleaning The ParkSense® System 205
- ParkSense® System Usage Precautions. 205

■ PARKVIEW® REAR BACK UP CAMERA — IF EQUIPPED 208

- Turning ParkView® On Or Off — With Uconnect® 5.0 210

- Turning ParkView® On Or Off — With Uconnect® 8.4A/8.4AN 210
- Turning ParkView® Camera Delay On Or Off — With Uconnect® 8.4A/8.4AN 211

■ OVERHEAD CONSOLE — IF EQUIPPED 211

- Courtesy/Reading Lights 212

■ GARAGE DOOR OPENER — IF EQUIPPED. . . .213

- Before You Begin Programming HomeLink® . . .214
- Programming A Rolling Code 215
- Programming A Non-Rolling Code 217
- Canadian/Gate Operator Programming 218
- Using HomeLink®. 220
- Security 220
- Troubleshooting Tips 221
- General Information. 222

■ POWER SUNROOF — IF EQUIPPED 222

- Opening Sunroof — Manual Mode 224
- Closing Sunroof — Manual Mode 224
- Opening Sunroof — Express 224
- Closing Sunroof — Express. 224
- Pinch Protect Feature 224
- Venting Sunroof — Express 225
- Sunshade Operation. 225
- Wind Buffeting 225
- Sunroof Maintenance 225
- Ignition Off Operation 225

■ ELECTRICAL POWER OUTLETS 226

■ CIGAR LIGHTER AND ASH RECEIVER — IF EQUIPPED 230

■ POWER INVERTER — IF EQUIPPED 231

■ CUPHOLDERS 232

- □ Front Seat Cupholders — (40–20–40 Seats) 232
- □ Front Instrument Panel Cupholders — Floor Mounted Shifter 232
- □ Rear Cupholder — Quad Cab®. 233
- □ Rear Cupholder — Crew Cab 233

■ STORAGE 234

- □ Glove Box Storage 234
- □ Door Storage. 236
- □ Center Storage Compartment — If Equipped 237
- □ Second Row In-Floor Storage Bin — If Equipped. 239
- □ Seatback Storage 240
- □ Storage (Regular Cab) 240
- □ Storage and Seats (Crew Cab). 241
- □ Plastic Grocery Bag Retainers (Regular Cab Models) 242

■ REAR WINDOW FEATURES 242

- □ Rear Window Defroster 242
- □ Power Sliding Rear Window — If Equipped 243
- □ Manual Sliding Rear Window — If Equipped 244

■ FOLD FLAT LOAD FLOOR — IF EQUIPPED 244
■ PICKUP BOX 246
■ RAMBOX® — IF EQUIPPED 248
□ RamBox® Integrated Box Side Storage Bins . . .248
□ Locking And Unlocking RamBox® 251
□ RamBox® Safety Warning. 252
□ Bed Extender — If Equipped 253
□ Bed Rail Tie-Down System 260
■ SLIDE-IN CAMPERS 262
□ Camper Applications 262
■ EASY-OFF TAILGATE 263
□ Disconnecting the Rear Camera or Remote Keyless Entry — If Equipped 263
□ Removing The Tailgate. 264
□ Locking Tailgate 265
■ TRI-FOLD TONNEAU COVER-IF EQUIPPED. . .266
□ Tri-Fold Tonneau Cover — If Equipped 266
□ Tri-Fold Tonneau Cover Removal 266
□ Tri-Fold Tonneau Cover Installation And Cleaning. 269

MIRRORS

Inside Day/Night Mirror

A single ball joint mirror is provided in the vehicle. It is a twist on mirror that has a fixed position at the windshield. The mirror installs on the windshield button with a counterclockwise rotation and requires no tools for mounting. The mirror head can be adjusted up, down, left, and right for various drivers. The mirror should be adjusted to center on the view through the rear window.

Headlight glare from vehicles behind you can be reduced by moving the small control under the mirror to the night position (toward the rear of the vehicle). The mirror should be adjusted while the small control under the mirror is set in the day position (toward the windshield).

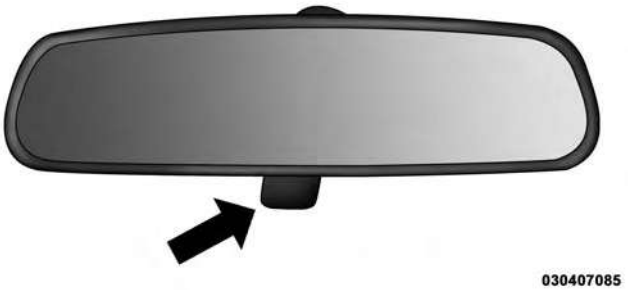

Adjusting Rearview Mirror

Automatic Dimming Mirror — If Equipped

A single ball joint mirror is provided in the vehicle. It is a twist on mirror that has a fixed position at the windshield. The mirror installs on the windshield button with a counterclockwise rotation and requires no tools for mounting. The mirror head can be adjusted up, down, left, and right for various drivers. The mirror should be adjusted to center on the view through the rear window.

This mirror automatically adjusts for headlight glare from vehicles behind you.

NOTE: The Automatic Dimming Mirror feature is disabled when the vehicle is in reverse gear to improve rear view viewing.

Automatic Dimming Mirror

NOTE: The mirror contains an Assist button and a 9–1–1 button located on the bottom of the mirror.

Assist Call

The rear view mirror contains an ASSIST push button which automatically connects the vehicle occupants to one of several predefined locations for immediate support:

- Roadside Assistance – If you get a flat tire, or need a tow, just press the Assist button and you'll be connected to someone who can help. Roadside Assistance will know what vehicle you're driving and its location. Additional fees may apply for roadside Assistance.
- Uconnect® Access Customer Care – In-vehicle support for Uconnect® Access and Uconnect® Access via Mobile features.
- Vehicle Customer Care – Total support for all other vehicle issues.

9-1-1 Call

Report an accident without taking your eyes off the road. Just press 9-1-1 on your mirror and connect.

CAUTION!

To avoid damage to the mirror during cleaning, never spray any cleaning solution directly onto the mirror. Apply the solution onto a clean cloth and wipe the mirror clean.

Automatic Dimming Mirror With Rear View Camera Display — If Equipped

A single ball joint mirror is provided in the vehicle. It is a twist on mirror that has a fixed position at the windshield. The mirror installs on the windshield button with a counterclockwise rotation and requires no tools for mounting. The mirror head can be adjusted up, down, left, and right for various drivers. The mirror should be adjusted to center on the view through the rear window.

This mirror automatically adjusts for headlight glare from vehicles behind you.

When the vehicle is placed into reverse gear a video display illuminates to display the image generated by the rear view camera located on the tailgate handle. The auto dimming feature is also disabled to improve rear view viewing.

Automatic Dimming Mirror With Rear View Camera

Outside Mirrors

To receive maximum benefit, adjust the outside mirrors to center on the adjacent lane of traffic with a slight overlap of the view obtained on the inside mirror.

WARNING!

Vehicles and other objects seen in the passenger side convex mirror will look smaller and farther away than they really are. Relying too much on your passenger side convex mirror could cause you to collide with another vehicle or other object. Use your inside mirror when judging the size or distance of a vehicle seen in the passenger side convex mirror. Some vehicles will not have a convex passenger side mirror.

Outside Mirrors Folding Feature

All outside mirrors are designed to be able to be manually folded both forward and rearward to prevent damage.

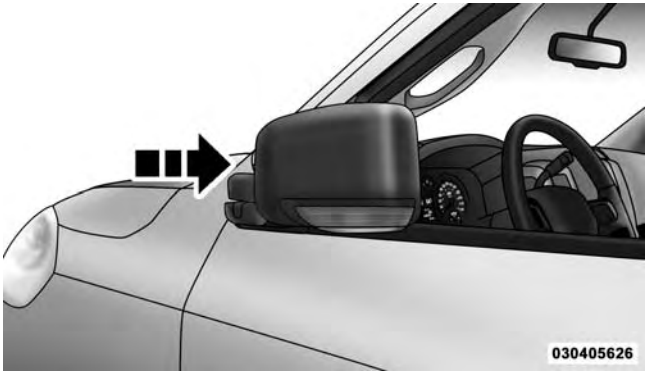

Folding Mirror

CAUTION!

It is recommended to fold the mirrors into the full rearward position to resist damage when entering a car wash or a narrow location.

Power Folding Outside Mirrors — If Equipped

If equipped with power folding mirrors, they can be electrically folded rearward and unfolded into the drive position.

The switch for the power folding mirrors is located between the power mirror switches L (left) and R (right). Press the switch once and the mirrors will fold in, press the switch a second time and the mirrors will return to the normal driving position.

If the mirror is manually folded after electrically cycled, a potential extra button push is required to get the mirrors back to the home position. If the mirror does not electrically fold check for ice or dirt build up at the pivot area which can cause excessive drag.

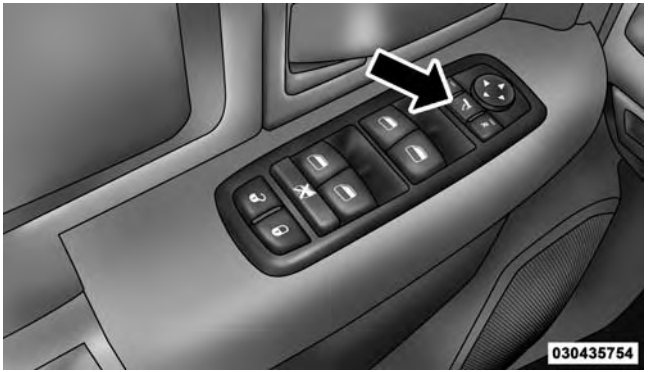

Power Folding Mirror Switch

Resetting the Power Folding Outside Mirrors

You may need to reset the power folding mirrors if the following occurs:

- The mirrors are accidentally blocked while folding.
- The mirrors are accidentally manually folded/ unfolded.
- The mirrors come out of the unfolded position.
- The mirrors shake and vibrate at normal driving speeds.

To reset the power folding mirrors : Fold and unfold them by pressing the button. (This may require multiple button pushes). This resets them to their normal position.

Power Mirrors — If Equipped

The controls for the power mirrors are located on the driver's door trim panel.

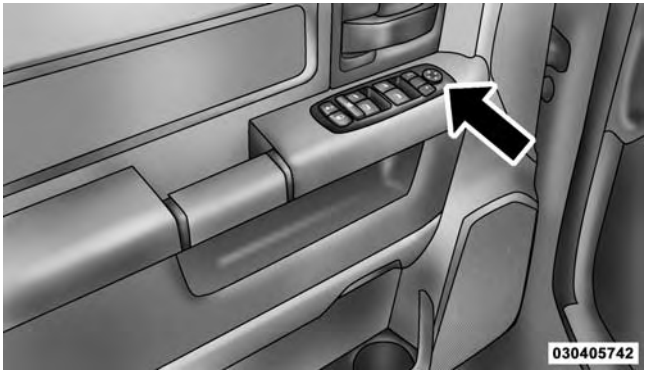

Power Mirror Controls Location

The power mirror controls consist of mirror select buttons and a four-way mirror control switch.

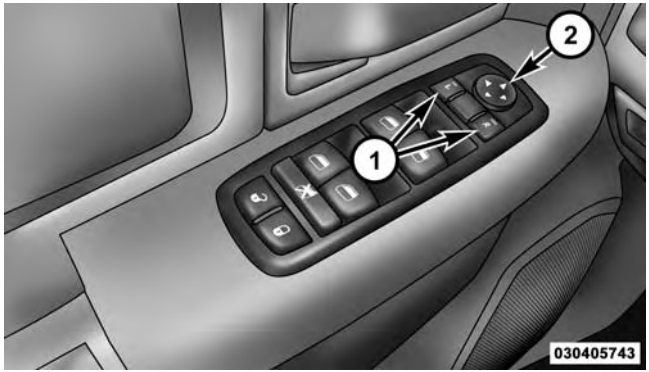

Power Mirror Controls

1 — Mirror Select Buttons
2 — Four-Way Mirror Control Switch

To adjust a mirror, press either the L (left) or R (right) button to select the mirror that you want to adjust.

Using the mirror control switch, press on any of the four arrows for the direction that you want the mirror to move

Power Mirror Movement

Heated Mirrors — If Equipped

These mirrors are heated to melt frost or ice. This feature can be activated whenever you turn on the rear window defroster (if equipped). Some vehicles may not be equipped with rear window defroster, in this case the heated mirrors will still function as intended. Refer to "Rear Window Features" in "Understanding The Features Of Your Vehicle" for further information.

Driver's Outside Automatic Dimming Mirror — If Equipped

The driver's outside mirror will automatically adjust for glare from vehicles behind you. This feature is controlled by the inside automatic dimming mirror and will automatically adjust for headlight glare when the inside mirror adjusts.

Illuminated Vanity Mirror — If Equipped

Illuminated vanity mirrors are located on each sun visor. To use the mirror, rotate the sun visor down and swing the mirror cover upward. The lights will turn on automatically. Closing the mirror cover turns off the light.

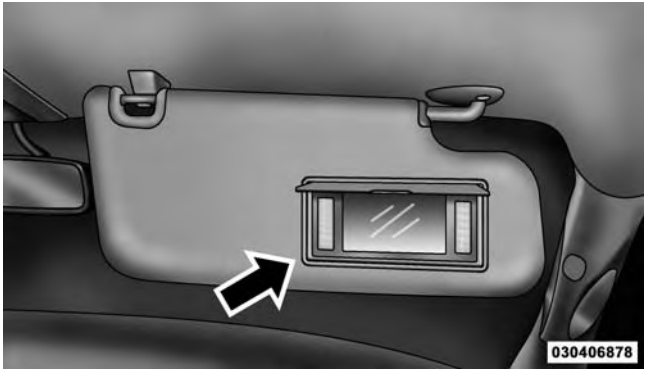

Illuminated Vanity Mirror

"Slide-On-Rod" Features Of Sun Visor — If Equipped

The sun visor "Slide-On-Rod" feature allows for additional flexibility in positioning the visor to block out the sun.

To use the "Slide-On-Rod" feature, rotate the sun visor downward and unclip it. Pull the sun visor along the "Slide-On-Rod" until the sun visor is in the desired position.

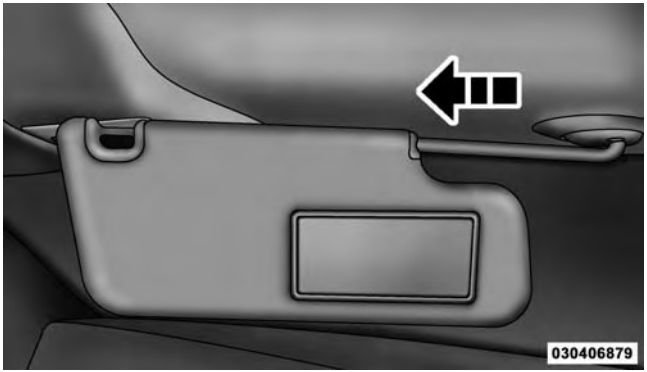

"Slide-On-Rod" Extender

Trailer Towing Mirrors — If Equipped

These mirrors are designed with an adjustable mirror head to provide a greater vision range when towing extra-wide loads. To change position inboard or outboard, the mirror head should be rotated (flipped in or out).

Trailer Towing Position

NOTE: Fold the trailer towing mirrors rearward prior to entering an automated car wash.

A small blindspot mirror is located next to main mirror and can be adjusted separately.

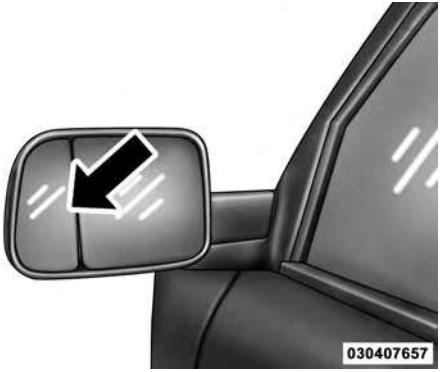

Blindspot Mirror

SEATS

Seats are a part of the Occupant Restraint System of the vehicle.

WARNING!

- **It is dangerous to ride in a cargo area, inside or outside of a vehicle. In a collision, people riding in these areas are more likely to be seriously injured or killed.**
- **Do not allow people to ride in any area of your vehicle that is not equipped with seats and seat belts. In a collision, people riding in these areas are more likely to be seriously injured or killed.**
- **Be sure everyone in your vehicle is in a seat and using a seat belt properly.**

Driver's Power Seat — If Equipped

Some models may be equipped with an eight-way power driver's seat. The power seat switches are located on the outboard side of the driver's seat cushion. There are two power seat switches that are used to control the movement of the seat cushion and the seatback.

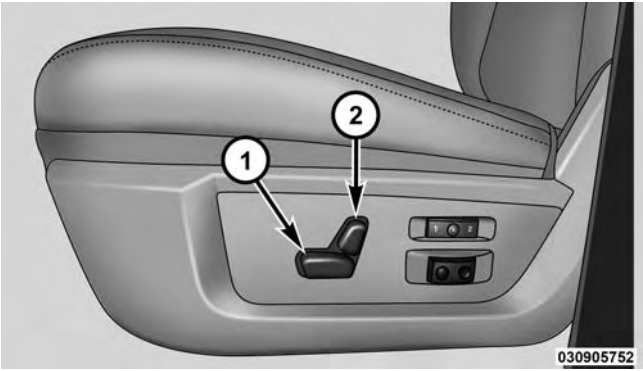

Power Seat Switches

1 — Power Seat Switch
2 — Power Seatback Switch

Adjusting The Seat Forward Or Rearward

The seat can be adjusted both forward and rearward. Push the seat switch forward or rearward, the seat will move in the direction of the switch. Release the switch when the desired position has been reached.

Adjusting The Seat Up Or Down

The height of the seats can be adjusted up or down. Pull upward or push downward on the seat switch, the seat will move in the direction of the switch. Release the switch when the desired position is reached.

Tilting The Seat Up Or Down

The angle of the seat cushion can be adjusted in four directions. Pull upward or push downward on the front or rear of the seat switch, the front or rear of the seat cushion will move in the direction of the switch. Release the switch when the desired position is reached.

Reclining The Seatback

The angle of the seatback can be adjusted forward or rearward. Push the seatback switch forward or rearward, the seat will move in the direction of the switch. Release the switch when the desired position is reached.

WARNING!

- **Adjusting a seat while driving may be dangerous. Moving a seat while driving could result in loss of control which could cause a collision and serious injury or death.**
- **Seats should be adjusted before fastening the seat belts and while the vehicle is parked. Serious injury or death could result from a poorly adjusted seat belt.**

(Continued)

WARNING! ***(Continued)***

- **Do not ride with the seatback reclined so that the shoulder belt is no longer resting against your chest. In a collision you could slide under the seat belt, which could result in serious injury or death.**

CAUTION!

Do not place any article under a power seat or impede its ability to move as it may cause damage to the seat controls. Seat travel may become limited if movement is stopped by an obstruction in the seat's path.

Passenger's Power Seat — If Equipped

Some models are equipped with a six-way power passenger seat. The power seat switch is located on the outboard side of the seat. The switch is used to control the movement of the seat and seat cushion.

Adjusting The Seat Forward Or Rearward

The seat can be adjusted both forward and rearward. Push the seat switch forward or rearward, the seat will move in the direction of the switch. Release the switch when the desired position has been reached.

Power Lumbar — If Equipped

Vehicles equipped with power driver or passenger seats may be also be equipped with power lumbar. The power lumbar switch is located on the outboard side of the power seat. Push the switch forward to increase the lumbar support. Push the switch rearward to decrease the lumbar support.

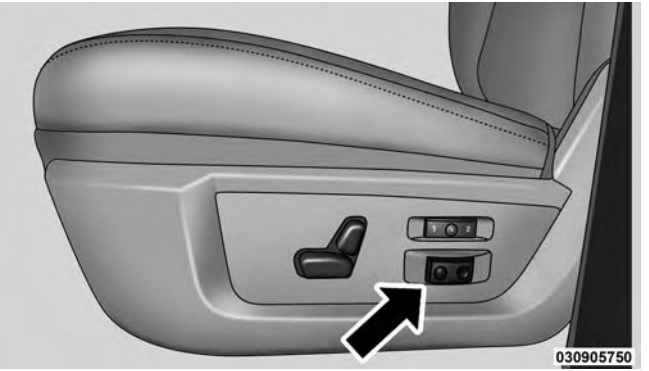

Lumbar Control Switch

Heated Seats — If Equipped

On some models, the front and rear seats may be equipped with heaters located in the seat cushions.

WARNING!

- **Persons who are unable to feel pain to the skin because of advanced age, chronic illness, diabetes, spinal cord injury, medication, alcohol use, exhaustion or other physical condition must exercise care when using the seat heater. It may cause burns even at low temperatures, especially if used for long periods of time.**
- **Do not place anything on the seat or seatback that insulates against heat, such as a blanket or cushion. This may cause the seat heater to overheat. Sitting in a seat that has been overheated could cause serious burns due to the increased surface temperature of the seat.**

Front Heated Seats

There are two heated seat switches as well as soft-keys in the radio that allow the driver and passenger to operate the seats independently. The controls for each seat are located near the bottom center of the instrument panel (below the climate controls) or in the radio unit.

You can choose from HIGH, LOW or OFF heat settings. Red indicator lights in each switch indicate the level of heat in use. Two indicator lights will illuminate for HIGH, one for LOW and none for OFF.

Press the switch once to select HIGH-level heating. Press the switch a second time to select LOW-level heating. Press the switch a third time to shut the heating elements OFF. This is the same procedure for the soft-keys in the radio.

NOTE:

- Once a heat setting is selected, heat will be felt within two to five minutes.
- The engine must be running for the heated seats to operate.

The heated seats switch from HIGH to LOW and from LOW to OFF automatically, based on time and temperature of the seat. The heated seats can operate on HIGH heat for a maximum of 60 minutes before switching to LOW heat at that time, the number of illuminated LEDs changes from two to one, indicating the change. Once a seat has switched to the LOW heat setting it may operate for a maximum of 45 minutes before automatically shutting OFF. The heated seats can shut OFF early or may not turn on when the seat is already warm.

Vehicle Equipped With Remote Start

On models that are equipped with remote start, the driver's heated seat can be programmed to come on during a remote start. Refer to "Remote Starting System — If Equipped" in "Things to Know Before Starting Your Vehicle" for further information.

Rear Heated Seats

On some models, the two outboard seats are equipped with heated seats. The heated seat switches for these seats are located on the rear of the center console.

There are two heated seat switches that allow the rear passengers to operate the seats independently. You can choose from HIGH, LOW or OFF heat settings. Amber indicator lights in each switch indicate the level of heat in use. Two indicator lights will illuminate for HIGH, one for LOW and none for OFF.

Press the switch once to select HIGH-level heating. Press the switch a second time to select LOW-level heating. Press the switch a third time to shut the heating elements OFF.

NOTE:

- Once a heat setting is selected, heat will be felt within two to five minutes.
- The engine must be running for the heated seats to operate.

When the HIGH-level setting is selected, the heater will provide a boosted heat level during the first four minutes of operation. Then, the heat output will drop to the normal HIGH-level. If the HIGH-level setting is selected, the system will automatically switch to LOW-level after a maximum of 60 minutes of continuous operation. At that time, the number of illuminated LEDs changes from two to one, indicating the change. The LOW-level setting will turn OFF automatically after a maximum of 45 minutes.

Ventilated Seats — If Equipped

On some models, both the driver and passenger seats are ventilated. Located in the seat cushion is a small fan that draws air from the passenger compartment and pulls the air through fine perforations in the seat cover to help keep the driver and front passenger cooler in higher ambient temperatures.

The ventilated seat switches are located in the switch bank in the center stack of the instrument panel just

below the climate controls as well as soft-keys located in the radio screen. The fans operate at two speeds, HIGH and LOW.

Press the switch once to choose HIGH, press it a second time to choose LOW. Pressing the switch a third time will turn the ventilated seat OFF. When HIGH speed is selected both lights on the switch will be illuminated. When LOW speed is selected one light will be illuminated.

NOTE: The engine must be running for the ventilated seats to operate.

Vehicles Equipped With Remote Start

On models equipped with remote start, the drivers ventilated seat can be programmed to come on during a remote start. Refer to "Remote Starting System — If Equipped" in "Things to Know Before Starting Your Vehicle" for further information.

Manual Seat Adjuster — If Equipped

Both front seats are adjustable forward or rearward. The manual seat adjustment handle is located under the seat cushion at the front edge of each seat.

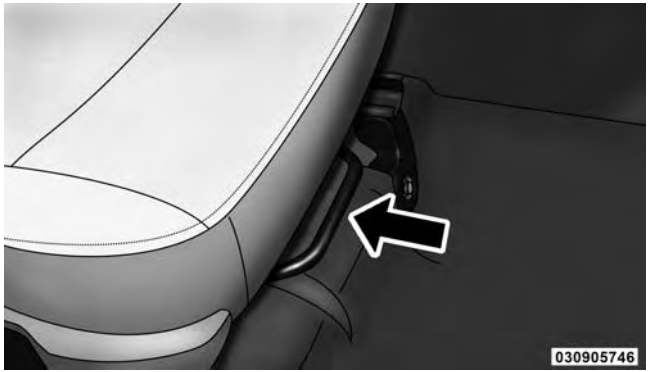

Manual Seat Adjuster

While sitting in the seat, pull up on the handle and slide the seat forward or backward. Release the bar once you have reached the desired position. Then, using body pressure, move forward and rearward on the seat to be sure that the seat adjusters have latched.

WARNING!

- **Adjusting a seat while driving may be dangerous. Moving a seat while driving could result in loss of control which could cause a collision and serious injury or death.**
- **Seats should be adjusted before fastening the seat belts and while the vehicle is parked. Serious injury or death could result from a poorly adjusted seat belt.**

Dump Feature — Manual Recline Seat Only — Standard Cab

Actuating the recliner handle will allow the seatback to swing (dump) forward on manual recliner seats. This "dump" feature allows access to the storage bin behind the seat.

WARNING!

- **Do not stand or lean in front of the seat while actuating the handle. The seatback may swing forward and hit you causing injury.**
- **To avoid injury, place your hand on the seatback and actuate the handle, then position the seatback in the desired position.**

40-20-40 Front Bench Seat — If Equipped

The seat is divided into three segments. The outboard seat portions are each 40% of the total width of the seat. On some models the back of the center portion (20%) easily folds down to provide an armrest/center storage compartment.

Mega Cab® Rear Seat Features

Reclining Rear Seats — If Equipped

The recliner handle is located on the outside of the seat cushion. To adjust the seatback, lift upward on the handle, lean back on the seatback and when you reach the desired position, release the handle.

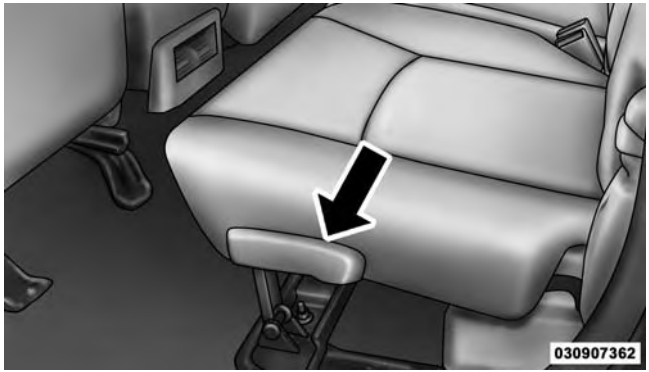

Rear Seat Recliner Handle

WARNING!

Do not ride with the seatback reclined so that the shoulder belt is no longer resting against your chest. In a collision you could slide under the seat belt, which could result in serious injury or death.

Folding Rear Seat (Table Mode) — If Equipped

Both the left and right rear seatbacks can be folded down and used as a table.

To fold down either rear seatback:

1. Lift the handle, located next to the head restraint.

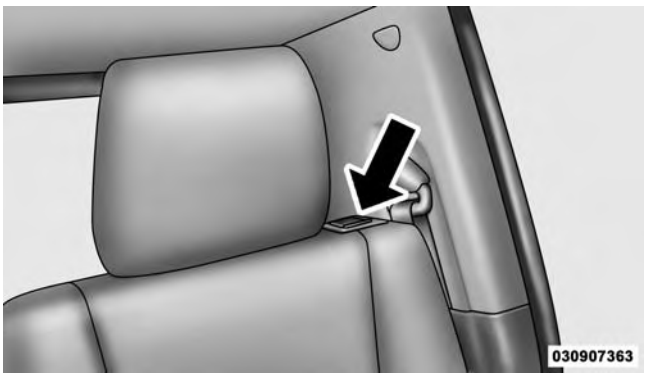

Table Mode Handle

2. Fold the seatback forward.

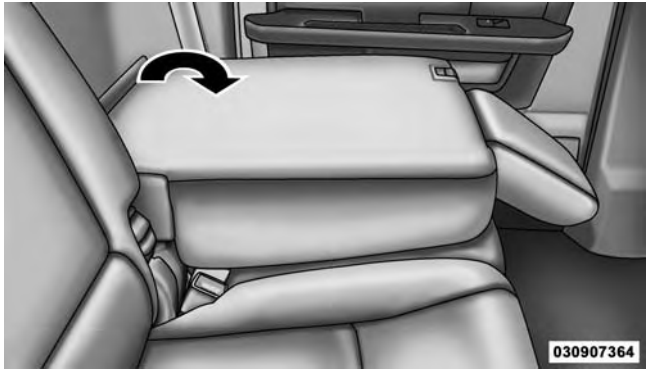

Table Mode

3. Lift the seatback, to return the seat to the upright position. Be sure the seatback is locked in place.

Folding Rear Seat — If Equipped

Both the outboard rear seats will drop and move forward when the seatback is folded flat.

WARNING!

- **It is dangerous to ride in a cargo area, inside or outside of a vehicle. In a collision, people riding in these areas are more likely to be seriously injured or killed.**
- **Do not allow people to ride in any area of your vehicle that is not equipped with seats and seat belts.**
- **Be sure everyone in your vehicle is in a seat and using a seat belt properly.**

(Continued)

WARNING! ***(Continued)***

- **Cargo must be securely tied down before driving your vehicle. Improperly secured cargo can fly around in a sudden stop or collision and strike someone in the vehicle, causing serious injury or death.**

To fold either rear seat flat:

1. Lift the handle, located on the outboard side of either of the rear seats.

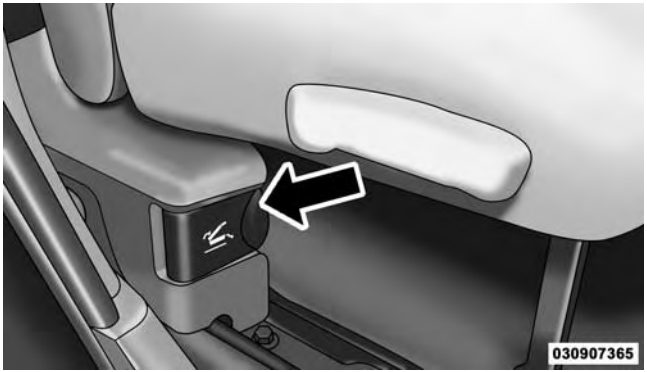

Handle

2. Fold the seatback down and push the seat forward.

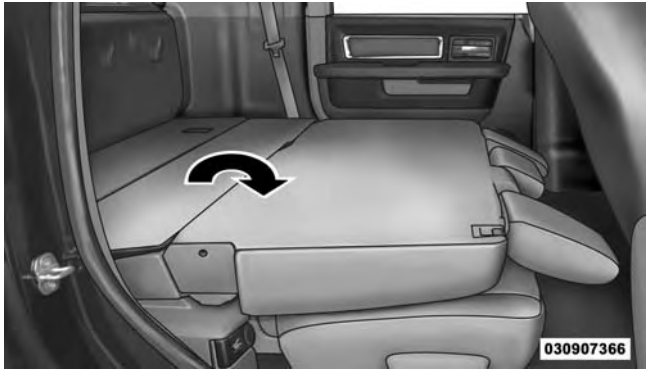

Rear Passenger Fold-Flat Seats

3. Lift the seatback, to return the seat to the upright position. Be sure the seat is locked in place.

WARNING!

An improperly latched seat could cause serious injury or death. Make sure that the seatback is securely locked into position. If the seatback in not securely locked into position the seat will not provide the proper stability for child seats and/or passengers.

Head Restraints

Head restraints are designed to reduce the risk of injury by restricting head movement in the event of a rear impact. Head restraints should be adjusted so that the top of the head restraint is located above the top of your ear.

WARNING!

The head restraints for all occupants must be properly adjusted prior to operating the vehicle or occupying a seat. Head restraints should never be adjusted while the vehicle is in motion. Driving a vehicle with the head restraints improperly adjusted or removed could cause serious injury or death in the event of a collision.

Front Head Restraints

To raise the head restraint, pull upward on the head restraint. To lower the head restraint, press the adjustment button, located on the base of the head restraint, and push downward on the head restraint.

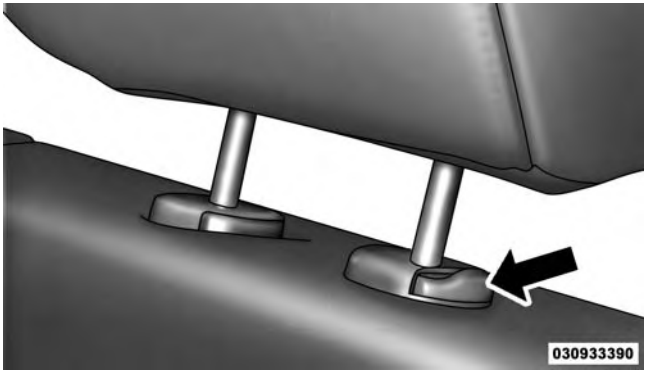

Adjustment Button

Rear Head Restraints

The rear seats are equipped with adjustable head restraints. To raise the head restraint, pull upward on the head restraint. To lower the head restraint, press the adjustment button, located on the base of the head restraint, and push downward on the head restraint.

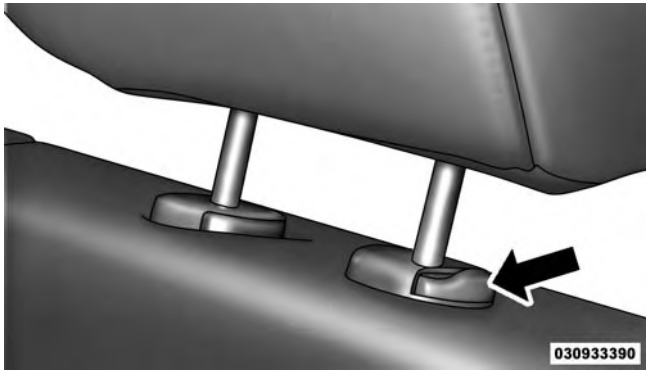

Adjustment Button

NOTE:

- The rear center head restraint (Crew Cab and Quad Cab) has only one adjustment position that is used to aid in the routing of a tether. Refer to "Occupant Restraints" in "Things to Know Before Starting Your Vehicle" for further information.
- The head restraints should only be removed by qualified technicians, for service purposes only. If either of the head restraints require removal, see your authorized dealer.

DRIVER MEMORY SEAT — IF EQUIPPED

This feature allows the driver to store up to two different memory profiles for easy recall through a memory switch. Each memory profile contains desired position settings for the driver seat, side mirrors, adjustable pedals (if equipped) and a set of desired radio station presets. Your Remote Keyless Entry (RKE) transmitter can also be programmed to recall the same positions when the UNLOCK button is pressed.

NOTE: Your vehicle is equipped with two RKE transmitters. One RKE transmitter can be linked to memory position 1 and the other transmitter can be linked to memory position 2.

The memory seat buttons are located on the outboard side of the drivers seat cushion.

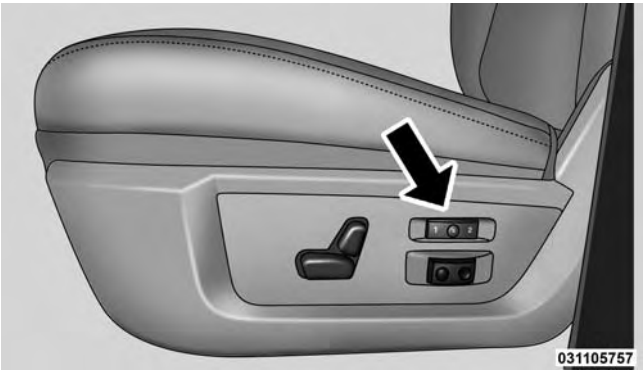

Memory Seat Buttons

Programming The Memory Feature

NOTE: To create a new memory profile, perform the following:

Vehicles Equipped With Keyless Enter-N-Go

1. Without pressing the brake pedal, push the ENGINE START/STOP button and cycle the ignition to the ON/RUN position (Do not start the engine).
2. Adjust all memory profile settings to desired preferences (seat, side mirrors, adjustable pedals and radio station presets).
3. Press and release the S (Set) button on the memory switch.
4. Within five seconds, press and release either of the memory buttons (1) or (2). The Electronic Vehicle Information Center (EVIC) will display which memory position has been set.

Vehicles Not Equipped With Keyless Enter-N-Go

1. Insert the ignition key fob, and turn the ignition switch to the ON/RUN position.
2. Adjust all memory profile settings to desired preferences (seat, side mirrors, adjustable pedals [if equipped], power tilt and telescopic steering column [if equipped], and radio station presets).
3. Press and release the S (Set) button on the memory switch.
4. Within five seconds, press and release either of the memory buttons (1) or (2). The Electronic Vehicle Information Center (EVIC) will display which memory position has been set.

NOTE:

- Memory profiles can be set without the vehicle in PARK, but the vehicle must be in PARK to recall a memory profile.
- The Recall Memory with Remote Linked to Memory feature can be enabled through the Electronic Vehicle Information Center (EVIC), refer to "Electronic Vehicle Information Center (EVIC)/Customer-Programmable Features" in "Understanding Your Instrument Panel" for further information.

Linking And Unlinking The Remote Keyless Entry Transmitter To Memory

Your RKE transmitters can be programmed to recall one of two pre-programmed memory profiles by pressing the UNLOCK button on the RKE transmitter.

NOTE: Before programming your RKE transmitters you must select the "Remote Linked to Memory" feature through the Electronic Vehicle Information Center (EVIC), refer to "Electronic Vehicle Information Center (EVIC)/Customer-Programmable Features" in "Understanding Your Instrument Panel" for further information.

To program your RKE transmitters, perform the following:

1. Remove the Key Fob from the ignition (or change the ignition to OFF, for vehicles equipped with Keyless Enter-N-Go).
2. Select desired memory profile (1) or (2).

NOTE: If a memory profile has not already been set, refer to "Programming The Memory Feature" for instructions on how to set a memory profile.

3. Once the profile has been recalled, press and release the SET (S) button on the memory switch, then press and release button (1) or (2) accordingly. "Memory Profile Set" (1 or 2) will display in the instrument cluster on vehicles equipped with the EVIC.
4. Press and release the LOCK button on the RKE transmitter within 10 seconds.

NOTE: Your RKE transmitters can be unlinked to your memory settings by following steps 1-4 above and pressing the UNLOCK button (instead of LOCK) on the RKE transmitter in Step 4.

Memory Position Recall

NOTE: The vehicle must be in PARK to recall memory positions. If a recall is attempted when the vehicle is not in PARK, a message will be displayed in the Electronic Vehicle Information Center (EVIC).

Driver One Memory Position Recall

- To recall the memory settings for driver one using the memory switch , press MEMORY button number 1 on the memory switch.
- To recall the memory settings for driver one using the RKE transmitter, press the UNLOCK button on the RKE transmitter linked to memory position 1.

Driver Two Memory Position Recall

- To recall the memory setting for driver two using the memory switch, press MEMORY button number 2 on the memory switch.
- To recall the memory settings for driver two using the RKE transmitter, press the UNLOCK button on the RKE transmitter linked to memory position 2.

A recall can be cancelled by pressing any of the MEMORY buttons during a recall (S, 1, or 2). When a recall is cancelled, the driver's seat, driver's mirror and the pedals stop moving. A delay of one second will occur before another recall can be selected.

TO OPEN AND CLOSE THE HOOD

To open the hood, two latches must be released.

1. Pull the hood release lever located below the steering wheel at the base of the instrument panel.

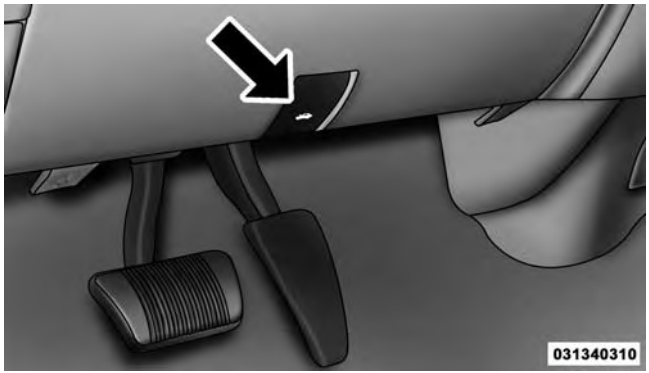

Hood Release

2. Reach into the opening beneath the center of the hood and push the safety latch lever to the left to release it, before raising the hood.

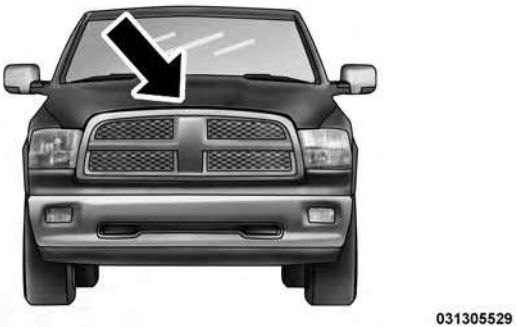

Safety Latch Location (1500 Series Shown)

CAUTION!

To prevent possible damage, do not slam the hood to close it. Use a firm downward push at the front center of the hood to ensure that both latches engage.

WARNING!

Be sure the hood is fully latched before driving your vehicle. If the hood is not fully latched, it could open when the vehicle is in motion and block your vision. Failure to follow this warning could result in serious injury or death.

LIGHTS

The headlight switch is located on the left side of the instrument panel, next to the steering wheel. The headlight switch controls the operation of the headlights, parking lights, instrument panel lights, cargo lights and fog lights (if equipped).

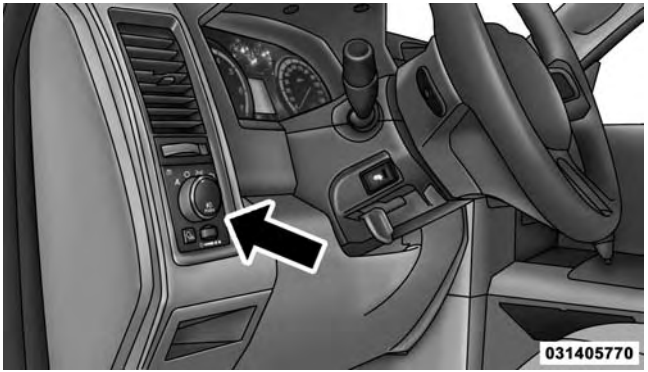

Headlight Switch Location

Your vehicle is equipped with plastic headlight and fog light (if equipped) lenses that are lighter and less susceptible to stone breakage than glass lights. Plastic is not as scratch resistant as glass and therefore different lens cleaning procedures must be followed.

To minimize the possibility of scratching the lenses and reducing light output, avoid wiping with a dry cloth. To remove road dirt, wash with a mild soap solution followed by rinsing.

CAUTION!

Do not use abrasive cleaning components, solvents, steel wool or other abrasive materials to clean the lenses.

Headlights

To turn on the headlights, rotate the headlight switch clockwise to the headlight position. When the headlight switch is on, the parking lights, taillights, license plate light and instrument panel lights are also turned on. To turn off the headlights, rotate the headlight switch back to the O (Off) position.

Automatic Headlights — If Equipped

This system automatically turns the headlights on or off according to ambient light levels. To turn the system on, rotate the headlight switch to the AUTO position.

031464204

Automatic Headlight Position

When the system is on, the Headlight Delay feature is also on. This means the headlights will stay on for up to

3

90 seconds after you turn the ignition switch to the OFF position. To turn the automatic headlights off, turn the headlight switch out of the AUTO position.

NOTE: The engine must be running before the headlights will turn on in the Automatic Mode.

Headlights On With Wipers (Available With Automatic Headlights Only)

When this feature is active, the headlights will turn on approximately 10 seconds after the wipers are turned on if the headlight switch is placed in the AUTO position. In addition, the headlights will turn off when the wipers are turned off, if they were turned on by this feature.

Refer to "Electronic Vehicle Information Center (EVIC)/ Customer-Programmable Features (SETUP)" in "Understanding Your Instrument Panel" for further information.

Daytime Running Lights (DRL) — If Equipped

The headlights on your vehicle will illuminate when the engine is started and the transmission is in any gear except PARK. This provides a constant "Lights ON" condition until the ignition is turned OFF. The lights illuminate at less than 50% of normal intensity. If the parking brake is applied, the Daytime Running Lights (DRL) will turn OFF. Also, if a turn signal is activated, the DRL lamp on the same side of the vehicle may turn off for the duration of the turn signal activation. Once the turn signal is no longer active, the DRL lamp will illuminate.

Headlight Delay

To aid in your exit, your vehicle is equipped with a headlight delay that will leave the headlights on for approximately 90 seconds. This delay is initiated when the ignition is turned OFF while the headlight switch is on, and then the headlight switch is cycled off. Headlight

delay can be cancelled by either turning the headlight switch on then off, or by turning the ignition ON.

The headlight delay time is programmable on vehicles equipped with an Electronic Vehicle Information Center (EVIC) or a Uconnect® system screen. Refer to "Electronic Vehicle Information Center (EVIC)/Customer-Programmable Features" or "Customer- Programmable Features — Uconnect® Access 8.4 Settings " in "Understanding Your Instrument Panel" for further information.

Automatic High Beam Headlamp Control — If Equipped

The Automatic High Beam Headlamp Control system provides increased forward lighting at night by automating high beam control through the use of a digital camera mounted on the inside rearview mirror. This camera detects vehicle specific light and automatically switches from high beams to low beams until the approaching vehicle is out of view.

NOTE:

- Automatic High Beam Headlamp Control can be turned on or off using the Uconnect® System, refer to "Uconnect® Settings" in "Understanding Your Instrument Panel" for further information.
- Broken, muddy, or obstructed headlights and taillights of vehicles in the field of view will cause headlights to remain on longer (closer to the vehicle). Also, dirt, film, and other obstructions on the windshield or camera lens will cause the system to function improperly.

If the windshield or Automatic High Beam Headlamp Control mirror is replaced, the mirror must be re-aimed to ensure proper performance. See your local authorized dealer.

To Activate

1. Select "Automatic High Beams — ON" through the EVIC. Refer to "Electronic Vehicle Information Center (EVIC)/Customer-Programmable Features" in "Understanding Your Instrument Panel" for further information.
2. Rotate the headlight switch counterclockwise to the AUTO (A) position.
3. Push the multifunction lever away from you to switch the headlights to the high beam position. Refer to "Multifunction Lever" in this section for further information.

NOTE: This system will not activate until the vehicle is at, or above, 25 mph (40 km/h).

To Deactivate

Perform either of the following steps to deactivate the SmartBeam™ system.

1. Select "Automatic High Beams — OFF" through the EVIC. Refer to "Electronic Vehicle Information Center (EVIC)/Customer-Programmable Features" in "Understanding Your Instrument Panel" for further information.
2. Pull the multifunction lever toward you to switch the headlights from the high beam to the low beam position.
3. Rotate the headlight switch clockwise from the AUTO (A) to the on position.

Parking Lights And Panel Lights

To turn on the parking lights and instrument panel lights, rotate the headlight switch clockwise. To turn off the parking lights, rotate the headlight switch back to the O (Off) position.

Fog Lights — If Equipped

The fog lights are turned on by rotating the headlight switch to the parking light or headlight position and pushing in the headlight rotary control.

031464205

Fog Light Switch

The fog lights will operate only when the parking lights are on or when the vehicle headlights are on low beam. An indicator light located in the instrument cluster will illuminate when the fog lights are on. The fog lights will

turn off when the switch is pushed a second time, when the headlight switch is rotated to the off position, or the high beam is selected.

Lights-On Reminder

If the headlights, parking lights, or cargo lights are left on after the ignition is turned OFF, a chime will sound when the driver's door is opened.

Battery Saver

To protect the life of your vehicle's battery, load shedding is provided for both the interior and exterior lights.

If the ignition is OFF and any door is left ajar for 10 minutes or the dimmer control is rotated all the way up to the dome ON position for 10 minutes, the interior lights will automatically turn off.

If the headlights remain on while the ignition is cycled OFF, the exterior lights will automatically turn off after eight minutes. If the headlights are turned on and left on for eight minutes while the ignition is OFF, the exterior lights will automatically turn off.

NOTE: Battery saver mode is cancelled if the ignition is ON.

Interior Lights

Courtesy and dome lights are turned on when the front doors are opened, when the dimmer control (rotating wheel on the bottom of the switch) is rotated to the far right detent position, or if equipped, when the UNLOCK button is pressed on the Remote Keyless Entry (RKE) transmitter. When a door is open and the interior lights are on, rotating the dimmer control all the way left, to the OFF detent, will cause all the interior lights to go out. This is also known as the "Party" mode because it allows the doors to stay open for extended periods of time without discharging the vehicle's battery.

The brightness of the instrument panel as well as the ambient lighting can be regulated by rotating the dimmer control right (brighter) or left (dimmer). When the headlights are on you can supplement the brightness of the odometer, trip odometer, radio and overhead console by rotating the control to the right until you hear a click. This feature is termed the "Parade" mode and is useful when headlights are required during the day.

031464206

Dimmer Control

Courtesy/Reading Lights

Both lights in the overhead console and rear passenger compartment will illuminate as courtesy lights when a door is opened, when the dimmer control is rotated to the courtesy light position (full right position), or when the UNLOCK button is pressed on the Remote Keyless Entry

(RKE) transmitter, if equipped. These lights are also operated individually as reading lights by pressing on the corresponding lens.

Front Courtesy/Reading Lights

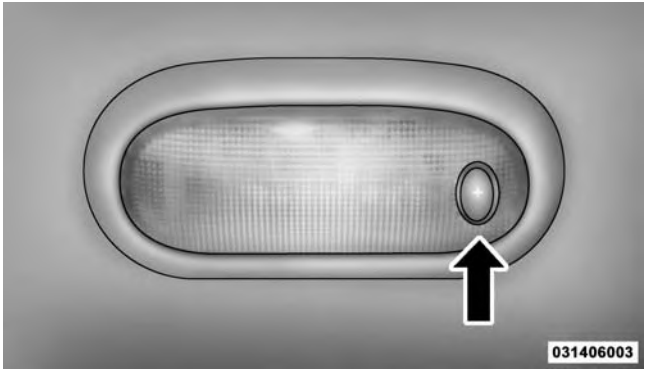

Rear Passenger Courtesy/Reading Light

NOTE: The courtesy/reading lights will remain on until the switch is pressed a second time, so be sure they have been turned off before leaving the vehicle. If the interior lights are left on after the ignition is turned OFF, they will automatically turn off after 15 minutes.

Ambient Light

The overhead console is equipped with an ambient light feature. This light casts illumination for improved visibility of the floor console area.

Ambient Light

Cargo Light

The cargo lights are turned on by pressing on the cargo button.

Cargo Light Switch

The cargo lights will also turn on for approximately 30 seconds when a RKE transmitter UNLOCK button is pressed, as part of the Illuminated Entry feature.

Multifunction Lever

The multifunction lever is located on the left side of the steering column.

Turn Signals

Move the multifunction lever up or down and the arrows on each side of the instrument cluster flash to show proper operation of the front and rear turn signal lights.

Turn Signal Lever

NOTE: If either light remains on and does not flash, or there is a very fast flash rate, check for a defective outside light bulb. If an indicator fails to light when the lever is moved, it would suggest that the indicator bulb is defective.

Lane Change Assist

Tap the lever up or down once, without moving beyond the detent, and the turn signal (right or left) will flash three times then automatically turn off.

Flash-To-Pass

You can signal another vehicle with your headlights by partially pulling the multifunction lever toward the steering wheel. This will cause the high beam headlights to turn on until the lever is released.

High/Low Beam Switch

Push the multifunction lever toward the instrument panel to switch the headlights to high beam. Pulling the multifunction lever back toward the steering wheel will turn the low beams back on, or shut the high beams off.

High/Low Beam Switch

WINDSHIELD WIPERS AND WASHERS

Windshield Wipers

The wipers and washers are operated by a switch in the multifunction lever. Turn the end of the handle to select the desired wiper speed.

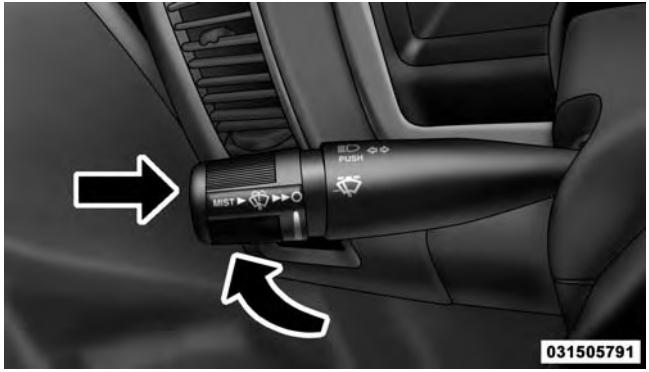

Windshield Wiper/Washer Switch

Windshield Wiper Operation

Rotate the end of the lever upward, to the first detent past the intermittent settings for low-speed wiper operation. Rotate the end of the lever upward to the second detent past the intermittent settings for high-speed wiper operation.

Intermittent Wiper System

The intermittent feature of this system was designed for use when weather conditions make a single wiping cycle, with a variable pause between cycles, desirable. For maximum delay between cycles, rotate the control knob into the upper end of the delay range.

The delay interval decreases as you rotate the knob until it enters the low continual speed position. The delay can be regulated from a maximum of about 18 seconds between cycles, to a cycle every one second. The delay intervals will double in duration when the vehicle speed is 10 mph (16 km/h) or less.

Windshield Washers

To use the windshield washer, push the washer knob, located on the end of the multifunction lever, inward to the second detent. Washer fluid will be sprayed and the wiper will operate for two to three cycles after the washer knob is released from this position. If the washer knob is depressed while in the delay range, the wiper will operate for several seconds after the washer knob is released. It will then resume the intermittent interval previously selected. If the washer knob is pushed while in the off position, the wiper will turn on and cycle approximately three times after the wash knob is released.

To prevent freeze-up of your windshield washer system in cold weather, select a solution or mixture that meets or exceeds the temperature range of your climate. This rating information can be found on most washer fluid containers.

WARNING!

Sudden loss of visibility through the windshield could lead to a collision. You might not see other vehicles or other obstacles. To avoid sudden icing of the windshield during freezing weather, warm the windshield with the defroster before and during windshield washer use.

Mist Feature

When a single wipe to clear off road mist or spray from a passing vehicle is needed, push the washer knob, located on the end of the multifunction lever, inward to the first detent and release. The wipers will cycle one time and automatically shut off.

NOTE: The mist feature does not activate the washer pump; therefore, no washer fluid will be sprayed on the windshield. The wash function must be used in order to spray the windshield with washer fluid.

Rain Sensing Wipers — If Equipped

This feature senses moisture on the windshield and automatically activates the wipers for the driver. The feature is especially useful for road splash or overspray from the windshield washers of the vehicle ahead. Rotate the end of the multifunction lever to one of five settings to activate this feature.

The sensitivity of the system can be adjusted with the multifunction lever. Wiper delay position 1 is the least sensitive, and wiper delay position 5 is the most sensitive. Setting 3 should be used for normal rain conditions. Settings 1 and 2 can be used if the driver desires less wiper sensitivity. Setting 4 and 5 can be used if the driver desires more sensitivity. Place the wiper switch in the OFF position when not using the system.

NOTE:

- The Rain Sensing feature will not operate when the wiper switch is in the low or high-speed position.
- The Rain Sensing feature may not function properly when ice, or dried salt water is present on the windshield.
- Use of Rain-X® or products containing wax or silicone may reduce Rain Sensing performance.
- A customer programmable feature in the Electronic Vehicle Information Center (EVIC) allows the Rain Sensing feature to be turned off. Refer to “Electronic Vehicle Information Center (EVIC)/Personal Settings (Customer-Programmable Features)” in “Understanding Your Instrument Panel” for further information.

The Rain Sensing system has protection features for the wiper blades and arms, and will not operate under the following conditions:

- **Low Ambient Temperature** — When the ignition is first turned ON, the Rain Sensing system will not operate until the wiper switch is moved, vehicle speed is greater than 0 mph (0 km/h), or the outside temperature is greater than 32°F (0°C).
- **Transmission In NEUTRAL Position** — When the ignition is ON, and the transmission is in the NEUTRAL position, the Rain Sensing system will not operate until the wiper switch is moved, vehicle speed is greater than 5 mph (8 km/h), or the shift lever is moved out of the NEUTRAL position.

Remote Start Mode Inhibit — On vehicles equipped with Remote Starting system, Rain Sensing wipers are not operational when the vehicle is in the remote start mode. Once the operator is in the vehicle and has placed the ignition switch in the RUN position, rain sensing wiper operation can resume, if it has been selected, and no other inhibit conditions (mentioned previously) exist.

TILT STEERING COLUMN

This feature allows you to tilt the steering column upward or downward. The tilt lever is located on the steering column, below the multifunction lever.

Pull the lever toward the steering wheel to unlock the steering column. With one hand firmly on the steering wheel, move the steering column up or down, as desired. Release the lever to lock the steering column firmly in place.

Tilt Steering Lever

WARNING!

Do not adjust the steering column while driving. Adjusting the steering column while driving or driving with the steering column unlocked, could cause

(Continued)

WARNING! ***(Continued)***

the driver to lose control of the vehicle. Failure to follow this warning may result in serious injury or death.

HEATED STEERING WHEEL — IF EQUIPPED

The steering wheel contains a heating element that helps warm your hands in cold weather. The heated steering wheel has only one temperature setting. Once the heated steering wheel has been turned on it will operate for approximately 30 to 80 minutes before automatically shutting off. The heated steering wheel can shut off early or may not turn on when the steering wheel is already warm.

The heated steering wheel switch is located on the switch bank below the climate controls. There are also soft-keys in the radio screen that will activate the heated steering wheel.

Press the switch to turn on the heated steering wheel. The light on the switch will illuminate to indicate the steering wheel heater is on. Pressing the switch a second time will turn off the heated steering wheel and light indicator.

NOTE: The engine must be running for the heated steering wheel to operate.

Vehicles Equipped With Remote Start

On models that are equipped with remote start, the heated steering wheel can be programmed to come on during a remote start. Refer to "Remote Starting System — If Equipped" in "Things to Know Before Starting Your Vehicle" for further information.

WARNING!

- **Persons who are unable to feel pain to the skin because of advanced age, chronic illness, diabetes, spinal cord injury, medication, alcohol use, exhaustion, or other physical conditions must exercise care when using the steering wheel heater. It may cause burns even at low temperatures, especially if used for long periods.**

(Continued)

WARNING! *(Continued)*

- **Do not place anything on the steering wheel that insulates against heat, such as a blanket or steering wheel covers of any type and material. This may cause the steering wheel heater to overheat.**

DRIVER ADJUSTABLE PEDALS — IF EQUIPPED

The adjustable pedals system is designed to allow a greater range of driver comfort for steering wheel tilt and seat position. This feature allows the brake, accelerator, and clutch pedals (if equipped) to move toward or away from the driver to provide improved position with the steering wheel.

The adjustable pedal switch is located to the left side of the steering column.

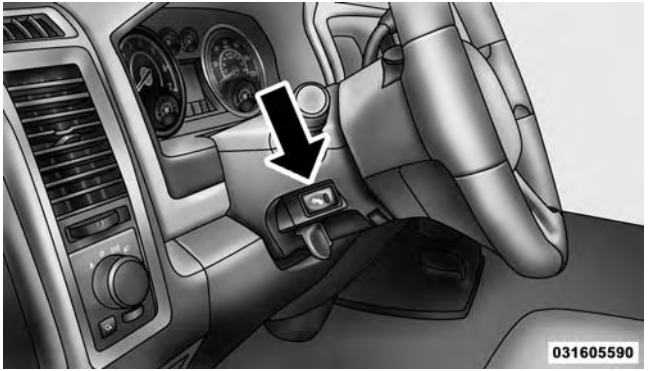

Adjustable Pedals Switch

- The pedals can be adjusted with the ignition OFF.
- The pedals **cannot** be adjusted when the vehicle is in REVERSE or when the Electronic Speed Control System is on. The following messages will be displayed on vehicles equipped with the Electronic Vehicle Information System (EVIC) if the pedals are attempted to be

adjusted when the system is locked out ("Adjustable Pedal Disabled — Cruise Control Engaged" or "Adjustable Pedal Disabled — Vehicle In Reverse".

NOTE:

- Always adjust the pedals to a position that allows full pedal travel.
- Further small adjustments may be necessary to find the best possible seat/pedal position.
- For vehicles equipped with Driver Memory Seat, you can use your Remote Keyless Entry (RKE) transmitter or the memory switch on the driver's door trim panel to return the adjustable pedals to pre-programmed positions. Refer to "Driver Memory Seat" in "Understanding The Features Of Your Vehicle" for further information.

CAUTION!

Do not place any article under the adjustable pedals or impede its ability to move as it may cause damage to the pedal controls. Pedal travel may become limited if movement is stopped by an obstruction in the adjustable pedal's path.

WARNING!

Do not adjust the pedals while the vehicle is moving. You could lose control and have an accident. Always adjust the pedals while the vehicle is parked.

ELECTRONIC SPEED CONTROL

When engaged, the Electronic Speed Control takes over accelerator operations at speeds greater than 25 mph (40 km/h).

The Electronic Speed Control buttons are located on the right side of the steering wheel.

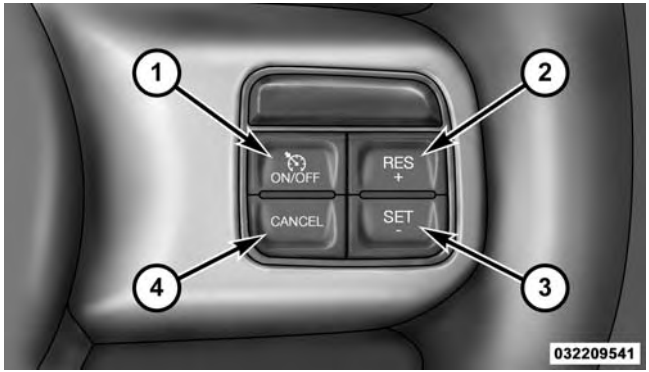

Electronic Speed Control Switches

1 — ON/OFF	2 — RES +
4 — CANCEL	3 — SET -

NOTE: In order to ensure proper operation, the Electronic Speed Control System has been designed to shut down if multiple Speed Control functions are operated at the same time. If this occurs, the Electronic Speed Control System can be reactivated by pushing the Electronic Speed Control ON/OFF button and resetting the desired vehicle set speed.

To Activate

Push the ON/OFF button. The Cruise Indicator Light in the instrument cluster will illuminate. To turn the system off, push the ON/OFF button a second time. The Cruise Indicator Light will turn off. The system should be turned off when not in use.

WARNING!

Leaving the Electronic Speed Control system on when not in use is dangerous. You could accidentally set the system or cause it to go faster than you want. You could lose control and have an accident. Always leave the system OFF when you are not using it.

To Set A Desired Speed

Turn the Electronic Speed Control ON. When the vehicle has reached the desired speed, press the SET (-) button and release. Release the accelerator and the vehicle will operate at the selected speed.

NOTE: The vehicle should be traveling at a steady speed and on level ground before pressing the SET (-) button.

To Deactivate

A soft tap on the brake pedal, pushing the CANCEL button, or normal brake pressure while slowing the vehicle will deactivate Electronic Speed Control without erasing the set speed memory. Pressing the ON/OFF button or turning the ignition switch OFF erases the set speed memory.

To Resume Speed

To resume a previously set speed, push the RES (+) button and release. Resume can be used at any speed above 20 mph (32 km/h).

To Vary The Speed Setting

When the Electronic Speed Control is set, you can increase speed by pushing the RES (+) button. If the button is continually pressed, the set speed will continue to increase until the button is released, then the new set speed will be established.

Pressing the RES (+) button once will result in a 1 mph (1.0 km/h) increase in set speed. Each subsequent tap of the button results in an increase of 1 mph (1.0 km/h).

To decrease speed while the Electronic Speed Control is set, push the SET (-) button. If the button is continually held in the SET (-) position, the set speed will continue to decrease until the button is released. Release the button when the desired speed is reached, and the new set speed will be established.

Pressing the SET (-) button once will result in a 1 mph (1.0 km/h) decrease in set speed. Each subsequent tap of the button results in a decrease of 1 mph (1.0 km/h).

NOTE: Tap results of 1 mph or 1 km/h depends on selection of US or METRIC units in the EVIC display settings menu, or the RADIO settings menu (dependent on vehicle configuration).

To Accelerate For Passing

Press the accelerator as you would normally. When the pedal is released, the vehicle will return to the set speed.

Using Electronic Speed Control On Hills

The transmission may downshift on hills to maintain the vehicle set speed.

NOTE: The Electronic Speed Control system maintains speed up and down hills. A slight speed change on moderate hills is normal.

On steep hills, a greater speed loss or gain may occur so it may be preferable to drive without Electronic Speed Control.

WARNING!

Electronic Speed Control can be dangerous where the system cannot maintain a constant speed. Your vehicle could go too fast for the conditions, and you could lose control and have an accident. Do not use Electronic Speed Control in heavy traffic or on roads that are winding, icy, snow-covered or slippery.

PARKSENSE® REAR PARK ASSIST — IF EQUIPPED

The ParkSense® Rear Park Assist system provides visual and audible indications of the distance between the rear fascia and a detected obstacle when backing up, e.g. during a parking maneuver. Refer to ParkSense® System Usage Precautions for limitations of this system and recommendations.

ParkSense® will retain the last system state (enabled or disabled) from the last ignition cycle when the ignition is changed to the ON/RUN position.

ParkSense® can be active only when the shift lever is in REVERSE. If ParkSense® is enabled at this shift lever position, the system will remain active until the vehicle speed is increased to approximately 7 mph (11 km/h) or above. The system will become active again if the vehicle speed is decreased to speeds less than approximately 6 mph (9 km/h).

ParkSense® Sensors

The four ParkSense® sensors, located in the rear fascia/bumper, monitor the area behind the vehicle that is within the sensors' field of view. The sensors can detect obstacles from approximately 12 in (30 cm) up to 79 in (200 cm) from the rear fascia/bumper in the horizontal direction, depending on the location, type and orientation of the obstacle.

ParkSense® Warning Display

The ParkSense® Warning screen will only be displayed if Sound and Display is selected from the Customer- Programmable Features section of the Electronic Vehicle Information Center (EVIC) or from the Uconnect® System (if available). Refer to "Electronic Vehicle Information Center (EVIC)/Personal Settings (Customer-Programmable Features)" or "Uconnect® Settings" (if available) in "Understanding Your Instrument Panel" for further information.

The ParkSense® Warning screen is located within the Electronic Vehicle Information Center (EVIC). It provides visual warnings to indicate the distance between the rear fascia/bumper and the detected obstacle. Refer to "Electronic Vehicle Information Center (EVIC)/Settings" in Understanding Your Instrument Panel" for further information.

ParkSense® Display

When the vehicle is in REVERSE, the warning display will turn ON indicating the system status.

The system will indicate a detected obstacle by showing a single arc in the left and/or right rear regions based on the object's distance and location relative to the vehicle.

If an object is detected in the left and/or right rear region, the display will show a single solid arc in the left and/or right rear region and the system will produce a tone. As the vehicle moves closer to the object, the display will show the single arc moving closer to the vehicle and the tone will change from a single 1/2 second tone to slow, to fast, to continuous.

032771343

Single 1/2 Second Tone

032771342

Slow Tone

032771344

Fast Tone

032771345

Continuous Tone

The vehicle is close to the obstacle when the warning display shows one flashing arc and sounds a continuous tone. The following chart shows the warning alert operation when the system is detecting an obstacle:

WARNING ALERTS					
Rear Distance (in/cm)	Greater than 79 in (200 cm)	79-45 in (200-115 cm)	45-31 in (115-80 cm)	31-18 in (80-45 cm)	Less than 12 in (30 cm)
Audible Alert Chime	None	Single 1/2 Second Tone	Slow	Fast	Continuous
Arc	None	4th Solid	3rd Solid	2nd Flashing	1st Flashing
Radio Volume Reduced	No	Yes	Yes	Yes	Yes

NOTE: ParkSense® will reduce the volume of the radio, if on, when the system is sounding an audio tone.

Enabling And Disabling ParkSense®

ParkSense® can be enabled and disabled with the ParkSense® switch.

When the ParkSense switch is pressed to disable the system, the instrument cluster will display the "PARKSENSE OFF" message for approximately five seconds. Refer to "Electronic Vehicle Information Center (EVIC)" in "Understanding Your Instrument Panel" for further information. When the shift lever is moved to REVERSE and the system is disabled, the EVIC will display the "PARKSENSE OFF" message for as long as the vehicle is in REVERSE.

NOTE: The ParkSense® system will automatically disable when the system detects that a trailer with trailer brakes has been connected to the Integrated Trailer Brake Module. The EVIC will display "PARKSENSE OFF" message for as long as the vehicle is in reverse.

The ParkSense® switch LED will be ON when ParkSense® is disabled or defective. The ParkSense® switch LED will be OFF when the system is enabled.

If the ParkSense switch is pressed, and the system is disabled or requires service, the ParkSense switch LED will blink momentarily, and then the LED will be ON.

Service The ParkSense® Rear Park Assist System

During vehicle start up, when the ParkSense® Rear Park Assist System has detected a faulted condition, the instrument cluster will actuate a single chime, once per ignition cycle, and it will display the "PARKSENSE UNAVAILABLE WIPE REAR SENSORS" or the "PARKSENSE UNAVAILABLE SERVICE REQUIRED" message. Refer to "Electronic Vehicle Information Center (EVIC)" in "Understanding Your Instrument Panel" for further information. When the shift lever is moved to

REVERSE and the system has detected a faulted condition, the EVIC will display the "PARKSENSE UNAVAILABLE WIPE REAR SENSORS" or the "PARKSENSE UNAVAILABLE SERVICE REQUIRED" message for as long as the vehicle is in REVERSE. Under this condition, ParkSense® will not operate.

If "PARKSENSE UNAVAILABLE WIPE REAR SENSORS" appears in the Electronic Vehicle Information Center (EVIC) make sure the outer surface and the underside of the rear fascia/bumper is clean and clear of snow, ice, mud, dirt or other obstruction, and then cycle the ignition. If the message continues to appear, see an authorized dealer.

If "PARKSENSE UNAVAILABLE SERVICE REQUIRED" appears in the EVIC, see your authorized dealer.

Cleaning The ParkSense® System

Clean the ParkSense® sensors with water, car wash soap and a soft cloth. Do not use rough or hard cloths. Do not scratch or poke the sensors. Otherwise, you could damage the sensors.

ParkSense® System Usage Precautions

NOTE:

- Ensure that the rear bumper is free of snow, ice, mud, dirt and debris to keep the ParkSense® system operating properly.
- Jackhammers, large trucks, and other vibrations could affect the performance of ParkSense® .
- When you turn ParkSense® off, the instrument cluster will display "PARKSENSE OFF". Furthermore, once you turn ParkSense® off, it remains off until you turn it on again, even if you cycle the ignition key.

- When you move the shift lever to the REVERSE position and ParkSense® is turned off, the instrument cluster will display "PARKSENSE OFF" message for as long as the vehicle is in REVERSE.
- ParkSense® , when on, will reduce the volume of the radio when it is sounding a tone.
- Clean the ParkSense® sensors regularly, taking care not to scratch or damage them. The sensors must not be covered with ice, snow, slush, mud, dirt or debris. Failure to do so can result in the system not working properly. The ParkSense® system might not detect an obstacle behind the fascia/bumper, or it could provide a false indication that an obstacle is behind the fascia/bumper.
- Obstacles such as bicycle carriers, trailer hitches, etc., must not be placed within 18 in (45 cm) from the rear fascia/bumper while driving the vehicle. Failure to do so can result in the system misinterpreting a close obstacle as a sensor problem, causing the "PARKSENSE UNAVAILABLE SERVICE REQUIRED" message to be displayed in the instrument cluster.
- On vehicles equipped with a tailgate, ParkSense® should be disabled when the tailgate is in the lowered or open position and the vehicle is in REVERSE. A lowered tailgate could provide a false indication that an obstacle is behind the vehicle.

CAUTION!

- **ParkSense® is only a parking aid and it is unable to recognize every obstacle, including small obstacles. Parking curbs might be temporarily detected or not detected at all. Obstacles located above or below the sensors will not be detected when they are in close proximity.**

(Continued)

CAUTION! *(Continued)*

- **The vehicle must be driven slowly when using ParkSense® in order to be able to stop in time when an obstacle is detected. It is recommended that the driver looks over his/her shoulder when using ParkSense®.**

WARNING!

- **Drivers must be careful when backing up even when using ParkSense®. Always check carefully behind your vehicle, look behind you, and be sure to check for pedestrians, animals, other vehicles, obstructions, and blind spots before backing up. You are responsible for safety and must continue to pay attention to your surroundings. Failure to do so can result in serious injury or death.**

(Continued)

WARNING! *(Continued)*

- **Before using ParkSense®, it is strongly recommended that the ball mount and hitch ball assembly is disconnected from the vehicle when the vehicle is not used for towing. Failure to do so can result in injury or damage to vehicles or obstacles because the hitch ball will be much closer to the obstacle than the rear fascia when the loudspeaker sounds the continuous tone. Also, the sensors could detect the ball mount and hitch ball assembly, depending on its size and shape, giving a false indication that an obstacle is behind the vehicle.**

PARKSENSE® FRONT AND REAR PARK ASSIST — IF EQUIPPED

The ParkSense® Park Assist system provides visual and audible indications of the distance between the rear and/or front fascia and a detected obstacle when backing

up or moving forward, e.g. during a parking maneuver. Refer to ParkSense® System Usage Precautions for limitations of this system and recommendations.

ParkSense® will retain the last system state (enabled or disabled) from the last ignition cycle when the ignition is changed to the ON/RUN position.

ParkSense® can be active only when the shift lever is in REVERSE or DRIVE. If ParkSense® is enabled at one of these shift lever positions, the system will remain active until the vehicle speed is increased to approximately 7 mph (11 km/h) or above. A display warning will appear in the EVIC indicating the vehicle is above ParkSense® operating speed. The system will become active again if the vehicle speed is decreased to speeds less than approximately 6 mph (9 km/h).

ParkSense® Sensors

The four ParkSense® sensors, located in the rear fascia/bumper, monitor the area behind the vehicle that is within the sensors' field of view. The sensors can detect obstacles from approximately 18 in (45 cm) up to 79 in (200 cm) from the rear fascia/bumper in the horizontal direction, depending on the location, type and orientation of the obstacle.

The six ParkSense® sensors, located in the front fascia/bumper, monitor the area in front of the vehicle that is within the sensors' field of view. The sensors can detect obstacles from approximately 12 in (30 cm) up to 47 in (120 cm) from the front fascia/bumper in the horizontal direction, depending on the location, type and orientation of the obstacle.

ParkSense® Warning Display

The ParkSense® Warning screen will only be displayed if Sound and Display is selected from the Customer - Programmable Features section of the Electronic Vehicle Information Center (EVIC) or from the Uconnect® System (if equipped). Refer to "Electronic Vehicle Information Center (EVIC)/Personal Settings (Customer- Programmable Features)" or "Uconnect® Settings" in "Understanding Your Instrument Panel" for further information.

The ParkSense® Warning screen is located within the Electronic Vehicle Information Center (EVIC). It provides visual warnings to indicate the distance between the rear fascia/bumper and/or front fascia/bumper and the detected obstacle. Refer to "Electronic Vehicle Information Center (EVIC)/Settings" in Understanding Your Instrument Panel" for further information.

ParkSense® Display

The warning display will turn ON indicating the system status when the vehicle is in REVERSE or when the vehicle is in DRIVE and an obstacle has been detected.

The system will indicate a detected obstacle by showing a single arc in the left and/or right rear regions based on the obstacle's distance and location relative to the vehicle.

If an obstacle is detected in the left and/or right rear region, the display will show a single arc in the left and/or right rear region and the system will produce a tone. As the vehicle moves closer to the obstacle, the display will show the single arc moving closer to the vehicle and the tone will change from a single 1/2 second tone to slow, to fast, to continuous.

The vehicle is close to the obstacle when the EVIC display shows one flashing arc and sounds a continuous tone. The following chart shows the warning alert operation when the system is detecting an obstacle:

WARNING ALERTS					
Rear Distance (in/cm)	Greater than 79 in (200 cm)	79-45 in (200-115 cm)	45-31 in (115-80 cm)	31-18 in (80-45 cm)	Less than 18 in (45 cm)
Front Distance (in/cm)	Greater than 47 in (120 cm)	47-39 in (120-100 cm)	39-25 in (100-65 cm)	25-12 in (65-30 cm)	Less than 12 in (30 cm)
Audible Alert (Chime)	None	Single 1/2 Second Tone (for rear only)	Slow (for rear only)	Fast	Continuous
Arcs	None	4th Solid	3rd Solid	2nd Flashing	1st Flashing
Radio Volume Reduced	No	Yes	Yes	Yes	Yes

NOTE: ParkSense® will reduce the volume of the radio, if on, when the system is sounding an audio tone.

Front Park Assist Audible Alerts

ParkSense® will turn off the Front Park Assist audible alert (chime) after approximately 3 seconds when an obstacle has been detected, the vehicle is stationary, and brake pedal is applied.

Adjustable Chime Volume Settings

Front and Rear chime volume settings can be selected from the EVIC or Uconnect® System — if equipped.

If Uconnect® System is equipped, chime volume settings will not be accessible from the EVIC.

The chime volume settings include LOW, MEDIUM, and HIGH. The factory default volume setting is MEDIUM.

ParkSense® will retain its last known configuration state through ignition cycles.

Enabling And Disabling Front And/Or Rear ParkSense®

Front ParkSense® can be enabled and disabled with the Front ParkSense® switch.

Rear ParkSense® can be enabled and disabled with the Rear ParkSense® switch.

When the Front or Rear ParkSense® switch is pressed to disable the system, the instrument cluster will display the “PARKSENSE OFF” message for approximately five seconds. Refer to “Electronic Vehicle Information Center (EVIC)” in “Understanding Your Instrument Panel” for further information.

When the shift lever is moved to REVERSE and the Front or Rear system is disabled, the EVIC will display the ″FRONT PARKSENSE OFF″ or ″REAR PARKSENSE OFF″ message for five seconds, followed by a car graphic with

"OFF" in the corresponding side. This car graphic will be displayed for as long as the vehicle is in REVERSE.

NOTE: Arc alerts from the enabled ParkSense® system, will interrupt the five second messages, and the EVIC will display the car graphic with the corresponding arcs and "OFF" message.

The Front or Rear ParkSense® switch LED will be ON when Front or Rear ParkSense® is disabled or requires service. The Front or Rear ParkSense® switch LED will be OFF when the Front or Rear system is enabled. If the Front or Rear ParkSense® switch is pressed, and the system requires service, the Front or Rear ParkSense® switch LED will blink momentarily, and then the LED will be ON.

Service The ParkSense® Park Assist System

During vehicle start up, when the ParkSense® System has detected a faulted condition, the instrument cluster will actuate a single chime, once per ignition cycle, and it will display the "PARKSENSE UNAVAILABLE WIPE REAR SENSORS", "PARKSENSE UNAVAILABLE WIPE FRONT SENSORS", or the "PARKSENSE UNAVAILABLE SERVICE REQUIRED" message for five seconds. When the shift lever is moved to Reverse and the system has detected a faulted condition, the EVIC will display a "PARKSENSE UNAVAILABLE WIPE REAR SENSORS", "PARKSENSE UNAVAILABLE WIPE FRONT SENSORS" or "PARKSENSE UNAVAILABLE SERVICE REQUIRED" pop up message for five seconds. After five seconds, a car graphic will be displayed with "UNAVAILABLE" at either the front or rear sensor location depending on where the fault is detected. The system will continue to provide arc alerts for the side that is functioning properly. These

arc alerts will interrupt the "PARKSENSE UNAVAILABLE WIPE REAR SENSORS", "PARKSENSE UNAVAILABLE WIPE FRONT SENSORS", or "PARKSENSE UNAVAILABLE SERVICE REQUIRED" messages if an object is detected within the five second pop-up duration. The car graphic will remain displayed for as long as the vehicle is in REVERSE. Refer to "Electronic Vehicle Information Center (EVIC)" in "Understanding Your Instrument Panel" for further information.

If "PARKSENSE UNAVAILABLE WIPE REAR SENSORS" or "PARKSENSE UNAVAILABLE WIPE FRONT SENSORS" appears in the Electronic Vehicle Information Center (EVIC) make sure the outer surface and the underside of the rear fascia/bumper and/or front fascia/bumper is clean and clear of snow, ice, mud, dirt or other obstruction and then cycle the ignition. If the message continues to appear see an authorized dealer.

If the "PARKSENSE UNAVAILABLE SERVICE REQUIRED" message appears in the EVIC, see an authorized dealer.

Cleaning The ParkSense® System

Clean the ParkSense® sensors with water, car wash soap and a soft cloth. Do not use rough or hard cloths. Do not scratch or poke the sensors. Otherwise, you could damage the sensors.

ParkSense® System Usage Precautions

NOTE:

- Ensure that the front and rear bumper are free of snow, ice, mud, dirt and debris to keep the ParkSense® system operating properly.
- Jackhammers, large trucks, and other vibrations could affect the performance of ParkSense®.

- When you turn Front or Rear ParkSense® off, the instrument cluster will display “FRONT PARKSENSE OFF” or “REAR PARKSENSE OFF.” Furthermore, once you turn Front or Rear ParkSense® off, it remains off until you turn it on again, even if you cycle the ignition key.
- When you move the shift lever to the REVERSE position and Front or Rear ParkSense® is turned off, the instrument cluster will display ″FRONT PARKSENSE OFF″ or ″REAR PARKSENSE OFF″ message for five seconds, followed by a car graphic with ″OFF″ in the corresponding side. This car graphic will be displayed for as long as the vehicle is in REVERSE.
- ParkSense®, when on, will reduce the volume of the radio when it is sounding a tone.
- Clean the ParkSense® sensors regularly, taking care not to scratch or damage them. The sensors must not be covered with ice, snow, slush, mud, dirt or debris. Failure to do so can result in the system not working properly. The ParkSense® system might not detect an obstacle behind or in front of the fascia/bumper, or it could provide a false indication that an obstacle is behind or in front of the fascia/bumper.
- Use the ParkSense® switch to turn the ParkSense® system off if obstacles such as bicycle carriers, trailer hitches, etc. are placed within 18 in (45 cm) from the rear fascia/bumper. Failure to do so can result in the system misinterpreting a close obstacle as a sensor problem, causing the “PARKSENSE UNAVAILABLE SERVICE REQUIRED” message to be displayed in the instrument cluster.
- On vehicles equipped with a tailgate, ParkSense® should be disabled when the tailgate is in the lowered or open position. A lowered tailgate could provide a false indication that an obstacle is behind the vehicle.

CAUTION!

- **ParkSense® is only a parking aid and it is unable to recognize every obstacle, including small obstacles. Parking curbs might be temporarily detected or not detected at all. Obstacles located above or below the sensors will not be detected when they are in close proximity.**
- **The vehicle must be driven slowly when using ParkSense® in order to be able to stop in time when an obstacle is detected. It is recommended that the driver looks over his/her shoulder when using ParkSense®.**

WARNING!

- **Drivers must be careful when backing up even when using ParkSense®. Always check carefully behind your vehicle, look behind you, and be sure to check for pedestrians, animals, other vehicles, obstructions, and blind spots before backing up. You are responsible for safety and must continue to pay attention to your surroundings. Failure to do so can result in serious injury or death.**

(Continued)

WARNING! *(Continued)*

- **Before using ParkSense®, it is strongly recommended that the ball mount and hitch ball assembly is disconnected from the vehicle when the vehicle is not used for towing. Failure to do so can result in injury or damage to vehicles or obstacles because the hitch ball will be much closer to the obstacle than the rear fascia when the loudspeaker sounds the continuous tone. Also, the sensors could detect the ball mount and hitch ball assembly, depending on its size and shape, giving a false indication that an obstacle is behind the vehicle.**

PARKVIEW® REAR BACK UP CAMERA — IF EQUIPPED

Your vehicle may be equipped with the ParkView® Rear Back Up Camera that allows you to see a image of the rear surroundings of your vehicle whenever the shift lever is put into REVERSE. The image will be displayed in the rearview mirror display — if equipped or Uconnect® screen — if equipped along with a caution note to “check entire surroundings” across the top of the screen. After five seconds this note will disappear.

The ParkView® camera is located to the left of the tailgate handle.

When the vehicle is shifted out of REVERSE (with camera delay turned OFF), the rear camera mode is exited and the navigation or audio screen appears again.

When the vehicle is shifted out of REVERSE (with camera delay turned ON), The rear camera image will be displayed for up to 10 seconds after shifting out of "REVERSE" unless the forward vehicle speed exceeds 8 mph (13 km/h), the transmission is shifted into "PARK" or the ignition is switched to the OFF position.

When enabled, active guide lines are overlaid on the image to illustrate the width of the vehicle and its projected backup path based on the steering wheel position. The active guide lines will show separate zones that will help indicate the distance to the rear of the vehicle.

The following table shows the approximate distances for each zone:

Zones	Distance to the rear of the vehicle
Red	0 - 1 ft (0 - 30 cm)
Yellow	1 ft - 3 ft (30 cm - 1 m)
Green	3 ft or greater (1 m or greater)

WARNING!

Drivers must be careful when backing up even when using the ParkView® Rear Back Up Camera. Always check carefully behind your vehicle, and be sure to check for pedestrians, animals, other vehicles, obstructions, or blind spots before backing up. You are responsible for the safety of your surroundings and

(Continued)

WARNING! *(Continued)*

must continue to pay attention while backing up. Failure to do so can result in serious injury or death.

CAUTION!

- **To avoid vehicle damage, ParkView® should only be used as a parking aid. The ParkView® camera is unable to view every obstacle or object in your drive path.**
- **To avoid vehicle damage, the vehicle must be driven slowly when using ParkView® to be able to stop in time when an obstacle is seen. It is recommended that the driver look frequently over his/her shoulder when using ParkView®.**

NOTE: If snow, ice, mud, or any foreign substance builds up on the camera lens, clean the lens, rinse with water, and dry with a soft cloth. Do not cover the lens.

Turning ParkView® On Or Off — With Uconnect® 5.0

1. Press the "Settings" button.
2. Press the "Safety & Assistance" soft-key.
3. Press the check box soft key next to "Parkview® Backup Camera" to enable/disable.

Turning ParkView® On Or Off — With Uconnect® 8.4A/8.4AN

1. Press the "Settings" soft-key.
2. Press the "Safety & Driving Assistance" soft-key.
3. Press the check box soft key next to "Parkview® Backup Camera" to enable/disable.

Turning ParkView® Camera Delay On Or Off — With Uconnect® 8.4A/8.4AN

1. Press the “Controls” soft-key located on the bottom of the Uconnect® display.
2. Press the “Settings” soft-key.
3. Press the “Parkview Backup Camera Delay ” soft-key to turn the ParkView® Backup Camera Delay system ON or OFF.

NOTE: A check mark will appear in the selection box to indicate the system is turned ON.

OVERHEAD CONSOLE — IF EQUIPPED

The overhead console is located on the headliner above the review mirror. The overhead console contains the following features:

- Courtesy/Reading Lights
- Power Sunroof Switch — If Equipped
- Power Sliding Rear Window Switch — If Equipped
- Universal Garage Door Opener — If Equipped

Overhead Console

Courtesy/Reading Lights

Both lights in the overhead console and rear passenger compartment will illuminate as courtesy lights when a door is opened, when the dimmer control is rotated to the courtesy light position (full right position), or when the UNLOCK button is pressed on the Remote Keyless Entry (RKE) transmitter, if equipped. These lights are also operated individually as reading lights by pressing on the corresponding lens.

Front Courtesy/Reading Lights

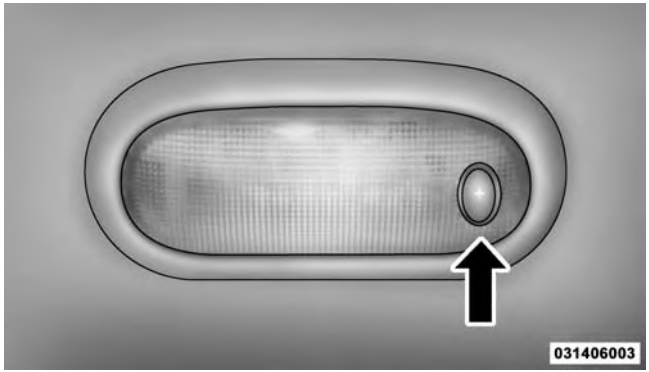

Rear Passenger Courtesy/Reading Light

NOTE: The courtesy/reading lights will remain on until the switch is pressed a second time, so be sure they have been turned off before leaving the vehicle. If the interior lights are left on after the ignition is turned OFF, they will automatically turn off after 15 minutes.

GARAGE DOOR OPENER — IF EQUIPPED

HomeLink® replaces up to three hand-held transmitters that operate devices such as garage door openers, motorized gates, lighting or home security systems. The HomeLink® unit is powered by your vehicles 12 Volt battery.

The HomeLink® buttons that are located in the overhead console designate the three different HomeLink® channels.

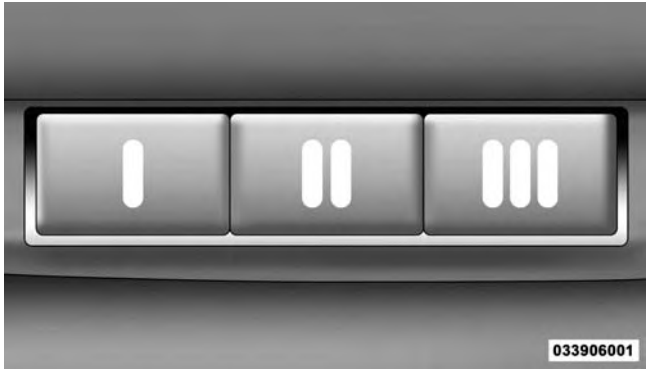

HomeLink® Buttons

NOTE: HomeLink® is disabled when the Vehicle Security Alarm is active.

Before You Begin Programming HomeLink®

Ensure your vehicle is parked outside of the garage before you begin programming.

For efficient programming and accurate transmission of the radio-frequency signal it is recommended that a new battery be placed in the hand-held transmitter of the device that is being programmed to the HomeLink® system.

Erase all channels before you begin programming. To erase the channels place the ignition in the ON/RUN position and press and hold the two outside HomeLink® buttons (I and III) for up to 20 seconds. The Electronic Vehicle Information Center (EVIC) will display “CLEARING CHANNELS”. Release the buttons when the EVIC displays “CHANNELS CLEARED”.

NOTE:

- Erasing all channels should only be performed when programming HomeLink® for the first time. Do not erase channels when programming additional buttons.
- If you have any problems, or require assistance, please call toll-free 1–800–355–3515 or, on the Internet at www.HomeLink.com for information or assistance.

Programming A Rolling Code

For programming garage door openers that were manufactured after 1995. These garage door openers can be identified by the "LEARN" or "TRAIN" button located where the hanging antenna is attached to the garage door opener. It is NOT the button that is normally used to open and close the door. The name and color of the button may vary by manufacturer.

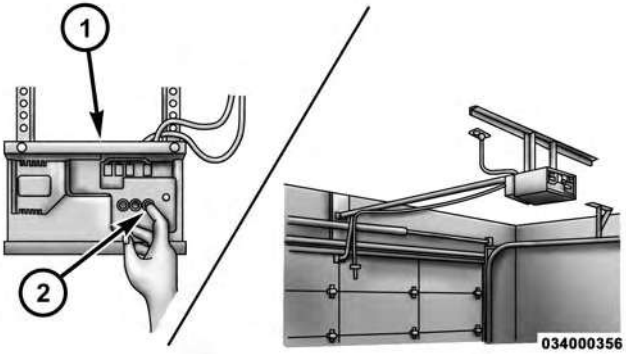

Training The Garage Door Opener

1 — Door Opener
2 — Training Button

1. Turn the ignition switch to the ON/RUN position.

2. Place the hand-held transmitter 1 to 3 inches (3 to 8 cm) away from the HomeLink® button you wish to program.
3. Simultaneously press and hold both the Homelink® button you want to program and the hand-held transmitter button.
4. Continue to hold buttons until the EVIC display changes from "CHANNEL # TRAINING" to "CHANNEL # TRAINED", then release both buttons.

NOTE:

- It may take up to 30 seconds or longer in some cases for the channel to train.
- If the EVIC displays "DID NOT TRAIN" repeat from Step 2.

5. At the garage door opener motor (in the garage), locate the "LEARN" or "TRAINING" button. This can usually be found where the hanging antenna wire is attached to the garage door opener/device motor. Firmly press and release the "LEARN" or "TRAINING" button. On some garage door openers/devices there may be a light that blinks when the garage door opener/device is in the LEARN/TRAIN mode.

NOTE: You have 30 seconds in which to initiate the next step after the LEARN button has been pressed.

6. Return to the vehicle and press the programmed HomeLink® button twice (holding the button for two seconds each time). The EVIC will display "CHANNEL # TRANSMIT". If the garage door opener/device activates, programming is complete.

NOTE: If the garage door opener/device does not activate, press the button a third time (for two seconds) to complete the training.

To program the remaining two HomeLink® buttons, repeat each step for each remaining button. DO NOT erase the channels.

Reprogramming A Single HomeLink® Button

To reprogram a channel that has been previously trained, follow these steps:

1. Turn the ignition switch to the ON/RUN position.
2. Press and hold the desired HomeLink® button until the EVIC displays "CHANNEL # TRAINING" **Do not release the button.**
3. **Without releasing the button** proceed with "Programming A Rolling Code" Step 2 and follow all remaining steps.

Programming A Non-Rolling Code

For programming Garage Door Openers manufactured before 1995.

1. Turn the ignition switch to the ON/RUN position.
2. Place the hand-held transmitter 1 to 3 inches (3 to 8 cm) away from the HomeLink® button you wish to program.
3. Simultaneously press and hold both the Homelink® button you want to program and the hand-held transmitter button.
4. Continue to hold buttons until the EVIC display changes from "CHANNEL # TRAINING" to "CHANNEL # TRAINED", then release both buttons.

NOTE:

- It may take up to 30 seconds or longer in some cases for the channel to train.
- If the EVIC displays “DID NOT TRAIN” repeat from Step 2.

5. Press and hold the programmed HomeLink® button. The EVIC will display “CHANNEL # TRANSMIT”. If the garage door opener/device activates, programming is complete.

To program the remaining two HomeLink® buttons, repeat each step for each remaining button. DO NOT erase the channels.

Reprogramming A Single HomeLink® Button

To reprogram a channel that has been previously trained, follow these steps:

1. Cycle the ignition to the ON/RUN position.
2. Press and hold the desired HomeLink® button until the indicator light begins to flash after 20 seconds. **Do not release the button.**
3. **Without releasing the button** proceed with “Programming A Non-Rolling Code” Step 2 and follow all remaining steps.

Canadian/Gate Operator Programming

For programming transmitters in Canada/United States that require the transmitter signals to “time-out” after several seconds of transmission.

Canadian radio frequency laws require transmitter signals to time-out (or quit) after several seconds of transmission – which may not be long enough for HomeLink® to pick up the signal during programming. Similar to this Canadian law, some U.S. gate operators are designed to time-out in the same manner.

It may be helpful to unplug the device during the cycling process to prevent possible overheating of the garage door or gate motor.

1. Turn the ignition switch to the ON/RUN position.
2. Place the hand-held transmitter 1 to 3 inches (3 to 8 cm) away from the HomeLink® button you wish to program.
3. Simultaneously press and hold both the Homelink® button while you press and release ("cycle"), your hand-held transmitter every two seconds.
4. Continue to hold buttons until the EVIC display changes from "CHANNEL # TRAINING" to "CHANNEL # TRAINED", then release both buttons.

NOTE:

- It may take up to 30 seconds or longer in some cases for the channel to train.
- If the EVIC displays "DID NOT TRAIN" repeat from Step 2.

5. Press and hold the programmed HomeLink® button. The EVIC will display "CHANNEL # TRANSMIT". If the device is plugged in and activates, programming is complete.

If you unplugged the garage door opener/device for programming, plug it back in at this time.

Reprogramming A Single HomeLink® Button

To reprogram a channel that has been previously trained, follow these steps:

1. Turn the ignition switch to the ON/RUN position.
2. Press and hold the desired HomeLink® button until the EVIC displays "CHANNEL # TRAINING" **Do not release the button.**
3. **Without releasing the button** proceed with "Canadian/Gate Operator Programming" Step 2 and follow all remaining steps.

Using HomeLink®

To operate, press and release the programmed HomeLink® button. Activation will now occur for the programmed device (i.e., garage door opener, gate operator, security system, entry door lock, home/office lighting, etc.,). The hand-held transmitter of the device may also be used at any time.

Security

It is advised to erase all channels before you sell or turn in your vehicle.

To erase the channels press and hold the two outside HomeLink® buttons (I and III) for up 20 seconds. The Electronic Vehicle Information Center (EVIC) will display "CLEARING CHANNELS". Release the buttons when the EVIC displays "CHANNELS CLEARED".

The HomeLink® Universal Transceiver is disabled when the Vehicle Security Alarm is active.

Troubleshooting Tips

If you are having trouble programming HomeLink®, here are some of the most common solutions:

- Replace the battery in the original hand-held transmitter.
- Press the LEARN button on the Garage Door Opener to complete the training for a Rolling Code.
- Did you unplug the device for programming and remember to plug it back in?

If you have any problems, or require assistance, please call toll-free 1–800–355–3515 or, on the Internet at www.HomeLink.com for information or assistance.

WARNING!

- **Your motorized door or gate will open and close while you are programming the universal transceiver. Do not program the transceiver if people, pets or other objects are in the path of the door or gate. Only use this transceiver with a garage door opener that has a "stop and reverse" feature as required by Federal safety standards. This includes most garage door opener models manufactured after 1982. Do not use a garage door opener without these safety features. Call toll-free 1–800–355–3515 or, on the Internet at www.HomeLink.com for safety information or assistance.**
- **Vehicle exhaust contains carbon monoxide, a dangerous gas. Do not run your vehicle in the garage while programming the transceiver. Exhaust gas can cause serious injury or death.**

General Information

This device complies with FCC rules Part 15 and Industry Canada RSS-210. Operation is subject to the following two conditions:

1. This device may not cause harmful interference.
2. This device must accept any interference that may be received including interference that may cause undesired operation.

NOTE:

- The transmitter has been tested and it complies with FCC and IC rules. Changes or modifications not expressly approved by the party responsible for compliance could void the user's authority to operate the device.
- The term IC before the certification/registration number only signifies that Industry Canada technical specifications were met.

POWER SUNROOF — IF EQUIPPED

The power sunroof switch is located on the overhead console between the courtesy/reading lights.

Power Sunroof Switch

WARNING!

- **Never leave children unattended in a vehicle, and do not leave the key fob in or near the vehicle. Do not leave the ignition of a vehicle equipped with Keyless Enter-N-Go™ in the ACC or ON/Run mode. Occupants, particularly unattended children, can become entrapped by the power sunroof while operating the power sunroof switch. Such entrapment may result in serious injury or death.**
- **In a collision, there is a greater risk of being thrown from a vehicle with an open sunroof. You could also be seriously injured or killed. Always fasten your seat belt properly and make sure all passengers are also properly secured.**
- **Do not allow small children to operate the sunroof. Never allow your fingers, other body parts, or any object, to project through the sunroof opening. Injury may result.**

Opening Sunroof — Manual Mode

To open the sunroof, press and hold the switch rearward to full open. Any release of the switch will stop the movement. The sunroof and sunshade will remain in a partially opened condition until the switch is pushed and held rearward again.

Closing Sunroof — Manual Mode

To close the sunroof, press and hold the switch in the forward position. Any release of the switch will stop the movement and the sunroof will remain in a partially closed condition until the switch is pushed and held forward again.

Opening Sunroof — Express

Press the switch rearward and release it within one-half second and the sunroof will open automatically from any position. The sunroof will open fully and stop automatically. This is called "Express Open". During Express Open operation, any movement of the sunroof switch will stop the sunroof.

Closing Sunroof — Express

Press the switch forward and release it within one-half second and the sunroof will close automatically from any position. The sunroof will close fully and stop automatically. This is called "Express Close". During Express Close operation, any movement of the switch will stop the sunroof.

Pinch Protect Feature

This feature will detect an obstruction in the opening of the sunroof during Express Close operation. If an obstruction in the path of the sunroof is detected, the sunroof will automatically retract. Remove the obstruction if this occurs. Next, press the switch forward and release to Express Close.

NOTE: If three consecutive sunroof close attempts result in Pinch Protect reversals, the fourth close attempt will be a Manual Close movement with Pinch Protect disabled. Press and hold close switch to fully close sunroof.

Venting Sunroof — Express

Press and release the Vent button within one half second and the sunroof will open to the vent position. This is called "Express Vent", and it will occur regardless of sunroof position. During Express Vent operation, any movement of the switch will stop the sunroof.

Sunshade Operation

The sunshade can be opened manually. However, the sunshade will open automatically as the sunroof opens.

NOTE: The sunshade cannot be closed if the sunroof is open.

Wind Buffeting

Wind buffeting can be described as the perception of pressure on the ears or a helicopter-type sound in the ears. Your vehicle may exhibit wind buffeting with the windows down, or the sunroof (if equipped) in certain open or partially open positions. This is a normal occurrence and can be minimized. If the buffeting occurs with the rear windows open, open the front and rear windows together to minimize the buffeting. If the buffeting occurs with the sunroof open, adjust the sunroof opening to minimize the buffeting or open any window.

Sunroof Maintenance

Use only a nonabrasive cleaner and a soft cloth to clean the glass panel.

Ignition Off Operation

For Vehicles Not Equipped With The Electronic Vehicle Information Center (EVIC)

The power sunroof switch will remain active for 45 seconds after the ignition switch is turned to the LOCK position. Opening either front door will cancel this feature.

For Vehicles Equipped With The EVIC

The power sunroof switch will remain active for up to approximately ten minutes after the ignition switch is turned to the LOCK position. Opening either front door will cancel this feature.

ELECTRICAL POWER OUTLETS

The auxiliary 12 Volt (13 Amp) power outlets can provide power for in-cab accessories designed for use with the standard "cigar lighter" plug. The 12 Volt power outlets have a cap attached to the outlet indicating "12V DC", together with either a key symbol or a battery symbol.

A key symbol indicates that the key must be in the ON/RUN or ACC positions for the outlet to provide power. The battery symbol indicates that the outlet is connected to the battery, and can provide power at all times.

NOTE: To ensure proper operation a MOPAR® knob and element must be used.

CAUTION!

- **Do not exceed the maximum power of 160 Watts (13 Amps) at 12 Volts. If the 160 Watt (13 Amp) power rating is exceeded the fuse protecting the system will need to be replaced.**
- **Power outlets are designed for accessory plugs only. Do not insert any other object in the power outlets as this will damage the outlet and blow the fuse. Improper use of the power outlet can cause damage not covered by your New Vehicle Limited Warranty.**

The auxiliary power outlets can be found in the following locations:

- Lower left and lower right of the center stack when equipped with a bench seat

Power Outlets — Center Stack

- Center console when equipped with bucket seats.

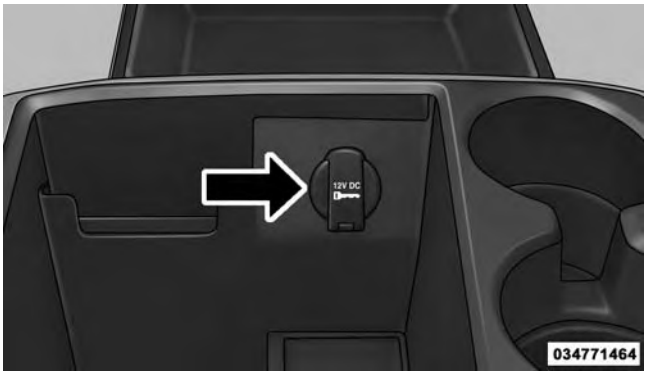

Power Outlet — Center Console

- Inside the upper lid of the center storage compartment — if equipped.

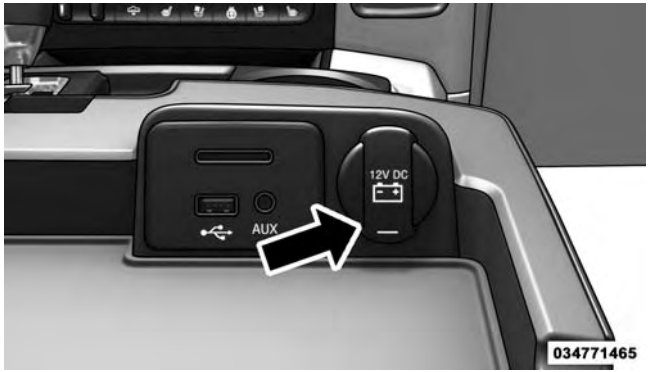

Power Outlet — Upper Lid

- Rear of the center console storage compartment — Quad Cab® or Crew Cab.

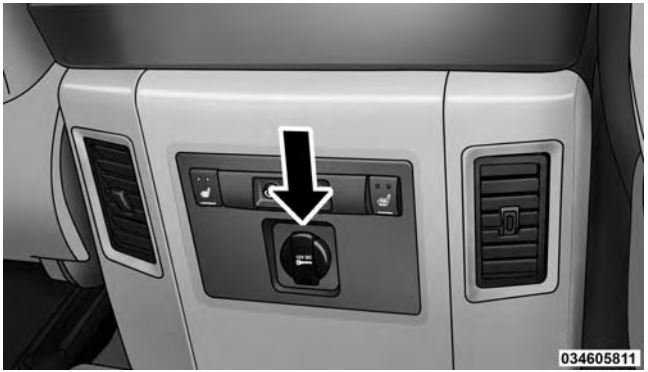

Power Outlet — Rear Center Console

The key symbol indicates that this outlet can supply power when the key is in the ON/RUN or ACC positions.

All accessories connected to the outlet(s) should be removed or turned off when the vehicle is not in use to protect the battery against discharge.

WARNING!

To avoid serious injury or death:

- **Only devices designed for use in this type of outlet should be inserted into any 12 Volt outlet.**
- **Do not touch with wet hands.**
- **Close the lid when not in use and while driving the vehicle.**
- **If this outlet is mishandled, it may cause an electric shock and failure.**

CAUTION!

- **Many accessories that can be plugged in draw power from the vehicle's battery, even when not in use (i.e., cellular phones, etc.). Eventually, if plugged in long enough, the vehicle's battery will discharge sufficiently to degrade battery life and/or prevent the engine from starting.**
- **Accessories that draw higher power (i.e., coolers, vacuum cleaners, lights, etc.), will discharge the battery even more quickly. Only use these intermittently and with greater caution.**
- **After the use of high power draw accessories, or long periods of the vehicle not being started (with accessories still plugged in), the vehicle must be driven a sufficient length of time to allow the generator to recharge the vehicle's battery.**

CIGAR LIGHTER AND ASH RECEIVER — IF EQUIPPED

A removable ash receiver and cigar lighter are available. For vehicles with a bench seat the cupholder tray can be used to hold the ash receiver.

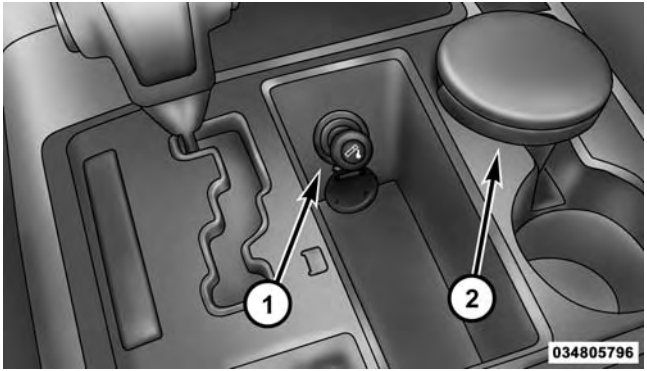

Optional Floor Shifter

1 — Cigar Lighter
2 — Ash Receiver

POWER INVERTER — IF EQUIPPED

A 115 Volt (150 Watts Maximum) outlet is located on the center stack of the instrument panel, to the right of the radio. This outlet can power cellular phones, electronics and other low power devices requiring power up to 150 Watts. Certain high-end video games, such as Playstation3 and XBox360 will exceed this power limit, as will most power tools.

The power inverter is designed with built-in overload protection. If the power rating of 150 Watts is exceeded, the power inverter will automatically shut down. Once the electrical device has been removed from the outlet the inverter should automatically reset.

Power Inverter Outlet

To turn on the power outlet, simply plug in the device. The outlet automatically turns off when the device is unplugged.

NOTE: Due to built-in overload protection, the power inverter will shut down if the power rating is exceeded.

WARNING!

To avoid serious injury or death:
- **Do not insert any objects into the receptacles.**
- **Do not touch with wet hands.**
- **Close the lid when not in use.**
- **If this outlet is mishandled, it may cause an electric shock and failure.**

CUPHOLDERS

Front Seat Cupholders — (40–20–40 Seats)

The cupholders are located on the backside of the center portion of the front seat (20). Fold down the center section of the front seat to gain access to the cupholders.

Front Instrument Panel Cupholders — Floor Mounted Shifter

For vehicles equipped with bucket seats there are two cupholders located in the floor console.

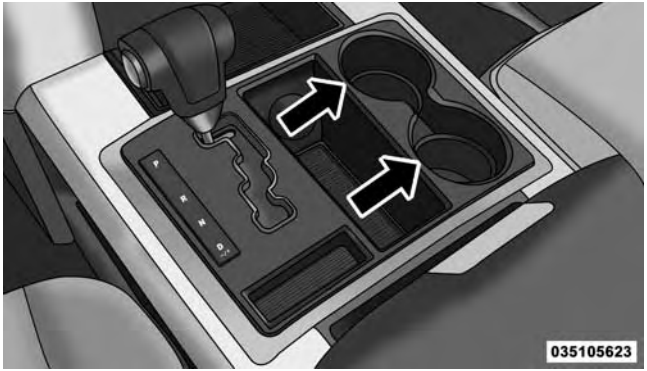

Cupholders

Rear Cupholder — Quad Cab®

Quad Cab® vehicles may be equipped with a rear cupholder that consists of two cup wells for rear passenger convenience.

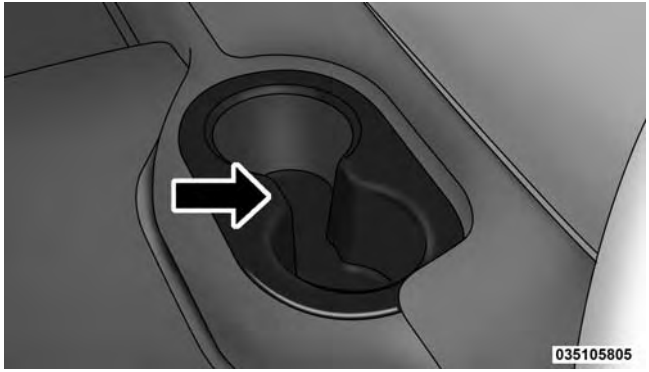

Rear Cup Wells

Rear Cupholder — Crew Cab

Crew Cab vehicles are equipped with rear cupholders located in the center armrest.

Crew Cab Rear Armrest Cupholder

Crew Cab vehicles may be equipped with a rear cupholder that consists of two cup wells for rear passenger convenience.

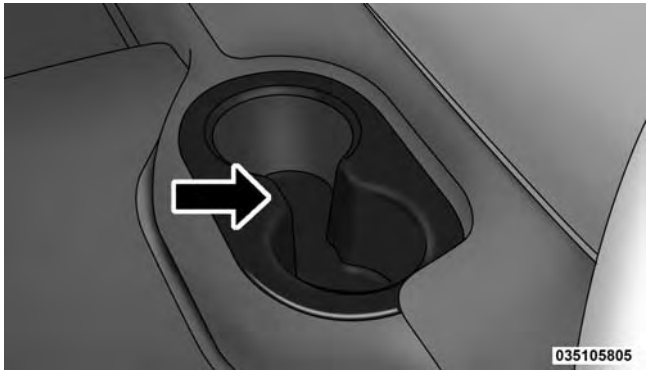

Rear Cup Wells

STORAGE

Glove Box Storage

The glove box is located on the passenger side of the instrument panel and features both an upper and lower storage area.

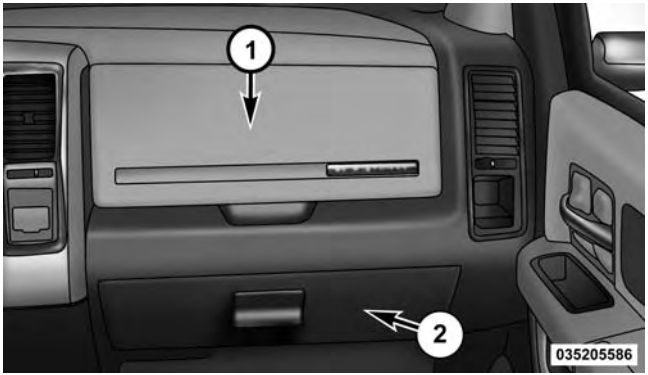

Glove Box

1 — Upper Glove Box
2 — Lower Glove Box

To open the upper glove box push upward on the handle release. The glove box door will automatically open.

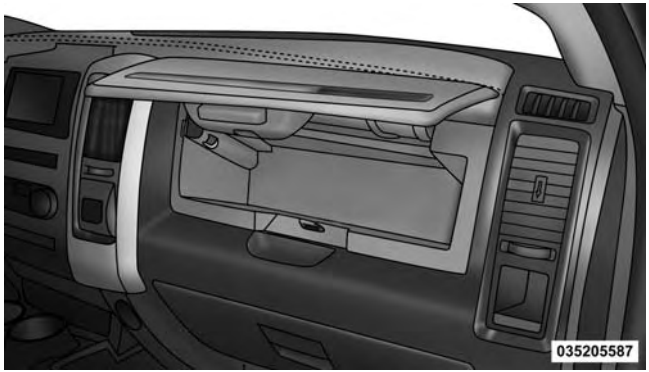

Upper Glove Box

Lower Glove Box

To open the lower glove box, pull on the handle to release the latch and lower the door.

Door Storage

Front Door Storage — If Equipped

Storage areas and bottle holders (drivers side only) are located in the door trim panels.

Front Door Storage

Rear Door Storage — Crew Cab

Storage compartments are located in both the driver and passenger door trim panels.

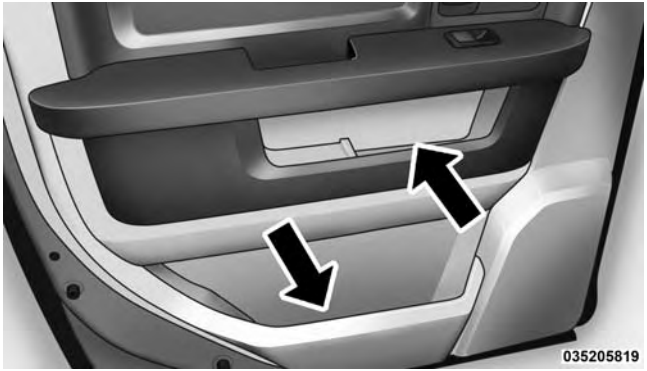

Rear Door Storage

Center Storage Compartment — If Equipped

The center storage compartment is located between the driver and passenger seats. The storage compartment provides an armrest and contains both and upper and lower storage area.

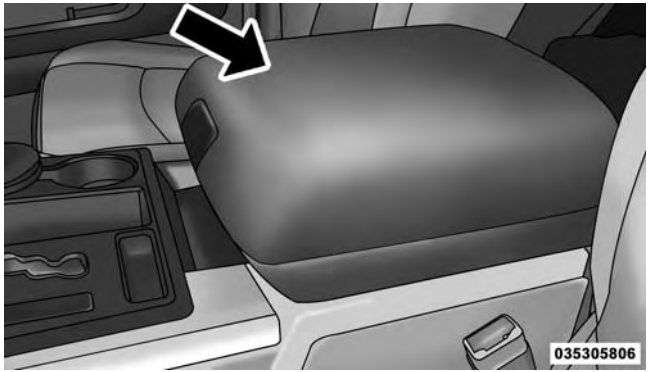

Center Storage Compartment

WARNING!

- **This armrest is not a seat. Anyone seated on the armrest could be seriously injured during vehicle operation, or a collision. Only use the center seating position when the armrest is fully upright.**
- **In a collision, the latch may open if the total weight of the items stored exceeds about 10 lbs (4.5 kg). These items could be thrown about endangering occupants of the vehicle. Items stored should not exceed a total of 10 lbs (4.5 kg).**

Pull on the upper handle on the front of the armrest to raise the cover. The upper storage area contains a 12 Volt power outlet that can be used to power small electrical devices, refer to “Electrical Power Outlets” for further information.

Upper Storage Compartment

With the upper lid closed, pull on the lower handle to open the lower storage bin.

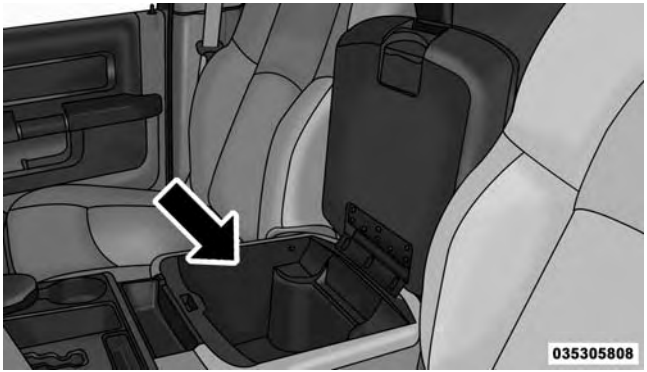

Lower Storage Bin

WARNING!

Do not operate this vehicle with a console compartment lid in the open position. Cellular phones, music players, and other handheld electronic devices

(Continued)

WARNING! *(Continued)*

should be stowed while driving. Use of these devices while driving can cause an accident due to distraction, resulting in death or injury.

Second Row In-Floor Storage Bin — If Equipped

In-floor storage bins are located in front of the second row seats and can be used for extra storage. The storage bins have removable liners that can be easily removed for cleaning.

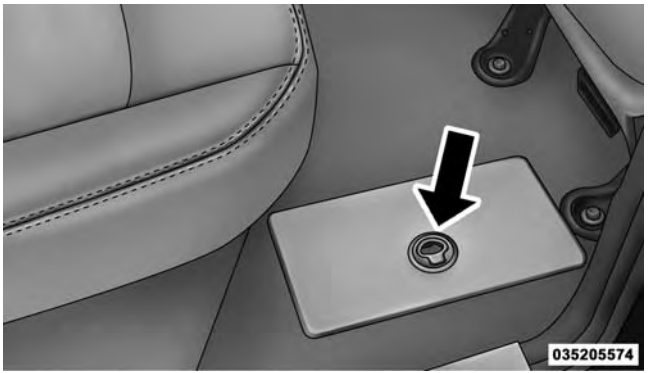

In-Floor Storage Bin And Latch

To open in-floor storage bin, lift upward on the handle of the latch and open the lid.

NOTE: The front seat may have to be moved forward to fully open the lid.

Opened Storage Bin

Seatback Storage

Located in the back of both the driver and passenger front seats are pockets that can be used for storage.

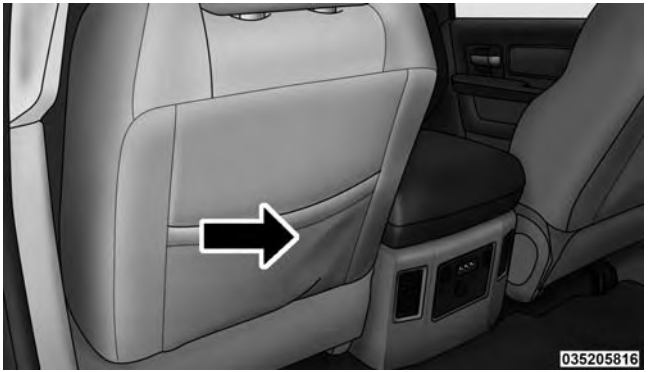

Drivers Side Seatback Storage

Storage (Regular Cab)

The storage bin is located behind the front seats and runs the length of the cab.

Storage Bin

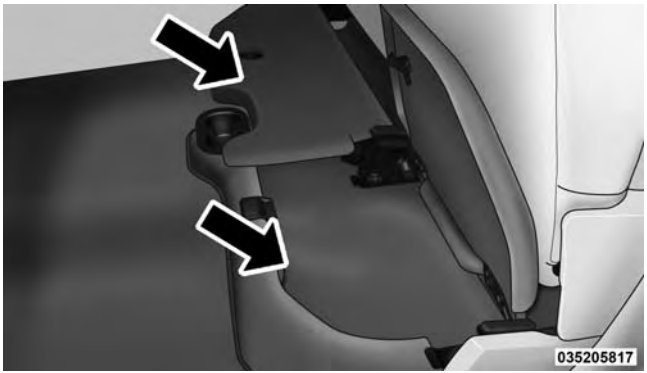

Crew Cab Storage

Storage and Seats (Crew Cab)

The Crew Cab models provide additional storage under the rear seats. Lift the seats to access the storage compartment.

To open the storage compartments, lift upward on the handle of the latch and open the lid.

CAUTION!

Always lift the storage compartment lids by using the handle. Failure to lift the lids by using the handle can result in damage to the lids.

Plastic Grocery Bag Retainers (Regular Cab Models)

Retainer hooks which will hold plastic grocery bag handles are built into the back panel of the cab, behind the rear seat.

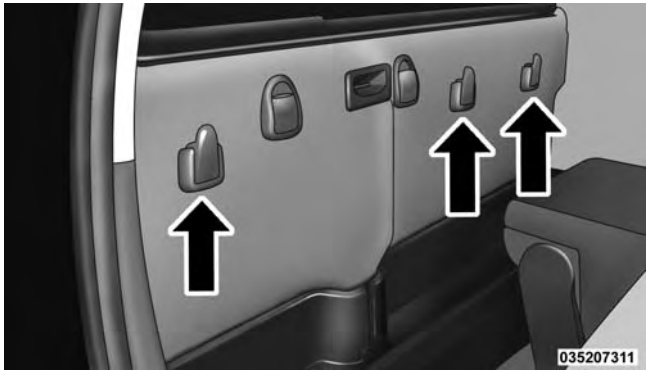

Grocery Bag Hooks

REAR WINDOW FEATURES

Rear Window Defroster

The rear window defroster button is located on the climate control panel. Press this button to turn on the rear window defroster and the heated outside mirrors (if equipped). An indicator in the button will illuminate when the rear window defroster is on. The rear window defroster automatically turns off after approximately 10 minutes. For an additional five minutes of operation, press the button a second time.

NOTE: To prevent excessive battery drain, use the rear window defroster only when the engine is operating.

CAUTION!

Failure to follow these cautions can cause damage to the heating elements:

- **Use care when washing the inside of the rear window. Do not use abrasive window cleaners on the interior surface of the window. Use a soft cloth and a mild washing solution, wiping parallel to the heating elements. Labels can be peeled off after soaking with warm water.**
- **Do not use scrapers, sharp instruments, or abrasive window cleaners on the interior surface of the window.**
- **Keep all objects a safe distance from the window.**

Power Sliding Rear Window — If Equipped

The switch for the power sliding rear window is located on the overhead console.

Rear Window Switch

Push the switch to the right to open the glass. Pull the switch to the left to close the glass.

Manual Sliding Rear Window — If Equipped

A locking device in the center of the window helps to prevent entry from the rear of the vehicle. Squeeze the lock to release the window.

FOLD FLAT LOAD FLOOR — IF EQUIPPED

Quad Cab® and Crew Cab models with a 60/40 rear seat may be equipped with a folding load floor.

WARNING!

Do not operate the vehicle with loose items stored on the load floor. While driving or in an accident you may experience abrupt stopping, rapid acceleration, or sharp turns. Loose objects stored on the load floor may move around with force and strike occupants, resulting in serious or fatal injury.

Unfolding the Load Floor

1. Lift the 60/40 seat cushion(s) to the upward position.

Unfolding The Load Floor

2. Grasp the knob on the load floor and lift the knob until the load floor unfolds into position.

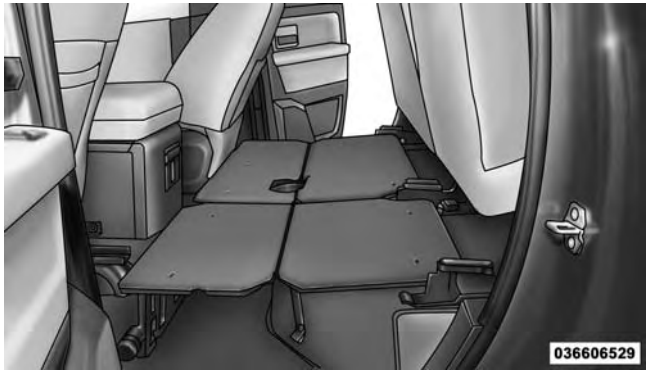

Load Floor In Open Position

3. Reverse the procedure to store the load floor.

Positioning the Load Floor for Storage Access Under the Seat

1. Lift the 60/40 seat cushion(s) to the upward position.
2. Unsnap the securing snap located at either side of the load floor.
3. Lift the load floor up to access storage under the load floor.

WARNING!

Do not drive with the load floor in the up position. When stopping fast or in an accident, the load floor could move to the down position causing serious injury.

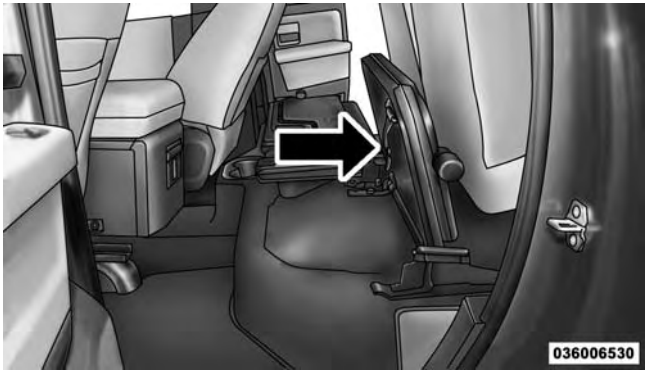

Load Floor Securing Straps

4. Reverse the procedure to put the load floor back in the secured down position before you operate the vehicle.

PICKUP BOX

The pickup box has many features designed for utility and convenience.

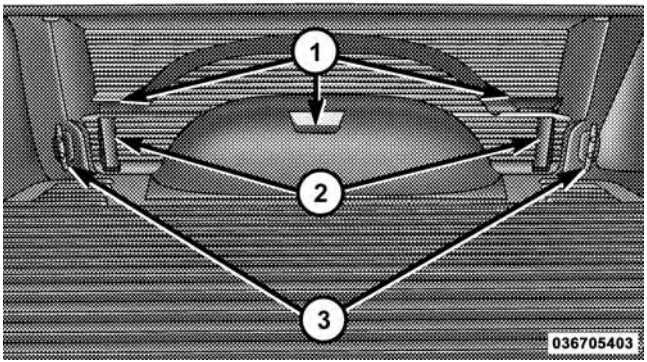

Pick Up Box Features

1 — Upper Load Floor Indents
2 — Bulk Head Dividers
3 — Cleats

NOTE: If you are installing a Toolbox, Ladder Rack or Headache Rack at the front of the Pickup Box, you must use Mopar Box Reinforcement Brackets that are available from your authorized dealer.

You can carry wide building materials (sheets of plywood, etc.) by building a raised load floor. Place lumber across the box in the indentations provided above the wheel housings and in the bulkhead dividers to form the floor.

WARNING!

- **The pickup box is intended for load carrying purposes only, not for passengers, who should sit in seats and use seat belts.**

(Continued)

WARNING! ***(Continued)***

- **Care should always be exercised when operating a vehicle with unrestrained cargo. Vehicle speeds may need to be reduced. Severe turns or rough roads may cause shifting or bouncing of the cargo that may result in vehicle damage. If wide building materials are to be frequently carried, the installation of a support is recommended. This will restrain the cargo and transfer the load to the pickup box floor.**
- **If you wish to carry more than 600 lbs (272 kg) of material suspended above the wheelhouse, supports must be installed to transfer the weight of the load to the pickup box floor or vehicle damage may result. The use of proper supports will permit loading up to the rated payload.**
- **Unrestrained cargo may be thrown forward in an accident causing serious or fatal injury.**

There are stampings in the sheet metal on the inner side bulkheads of the box in front of and behind both wheel housings. Place wooden boards across the box from side to side to create separate load compartments in the pickup box.

There are four tie-down cleats bolted to the lower sides of the pickup box that can sustain loads up to 1000 lbs (450 kg) total.

RAMBOX® — IF EQUIPPED

The RamBox® system is an integrated pickup box storage and cargo management system consisting of three features:

- Integrated box side storage bins
- Cargo extender/divider
- Bed rail tie-down system

RamBox® Integrated Box Side Storage Bins

Cargo storage bins are located on both sides of the pickup box. The cargo storage bins provide watertight, lockable, illuminated storage for up to 150 lbs (68 kg) for 1500 series vehicles or 300 lbs (136 kg) for 2500 and 3500 series vehicles of evenly distributed cargo.

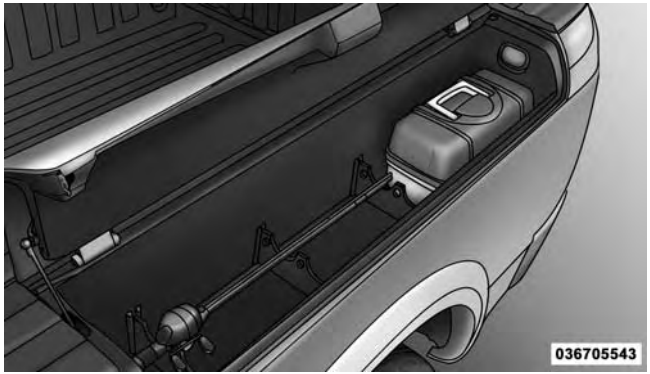

RamBox® Cargo Storage Bins

CAUTION!

Failure to follow the following items could cause damage to the vehicle:

- **Assure that all cargo inside the storage bins is properly secured.**
- **Do not exceed cargo weight rating of 150 lb (68 kg) 1500 series vehicles or 300 lbs (136 kg) for 2500 and 3500 series vehicles per bin.**

To open a storage bin with the RamBox® unlocked, press and release the button located on the lid. The RamBox® lid will open upward to allow hand access. Lift the lid to fully open.

NOTE: RamBox® will not open when the pushbutton is pressed if the RamBox® is locked.

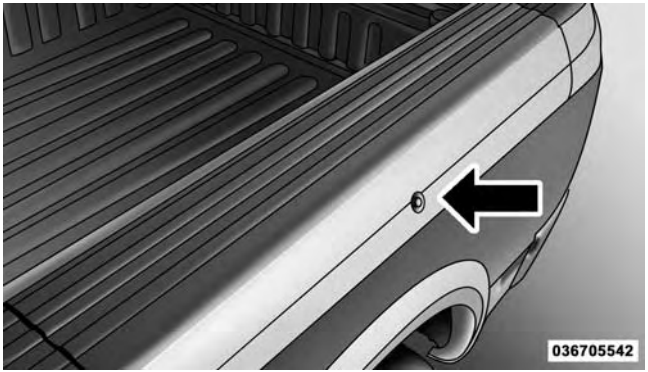

RamBox® Pushbutton And Lock

RamBox® Light Switch

The interior of the RamBox® will automatically illuminate when the lid is opened. In addition to the automatic illumination switch, there is a manual on/off switch located at the rear of each storage bin. Pushing the switch once will turn off the bin lights, pushing the switch again will turn the lights back on.

CAUTION!

Leaving the lid open for extended periods of time could cause the vehicle battery to discharge. If the lid is required to stay open for extended periods of time,

(Continued)

CAUTION! *(Continued)*

it is recommended that the bin lights be turned off manually using the on/off switch.

Cargo bins feature two removable drain plugs (to allow water to drain from bins). To remove plug, pull up on the edge. To install push plug downward into drain hole.

NOTE: Provisions are provided in the bins for cargo dividers and shelf supports. These accessories (in addition to other RamBox® accessories) are available from MOPAR®.

Locking And Unlocking RamBox®

Press and release the LOCK or UNLOCK button on the RKE transmitter to lock and unlock all doors, the tailgate and the RamBox® (if equipped). Refer to "Remote Keyless Entry" for further details.The RamBox® storage bins can be locked using the vehicle key. To lock and unlock the storage bin, insert the key into the keyhole on the pushbutton and turn clockwise to lock or counterclockwise to unlock. Always return the key to the upright (vertical) position before removing the key from the pushbutton.

CAUTION!

- **Ensure cargo bin lids are closed and latched before moving or driving vehicle.**
- **Loads applied to the top of the bin lid should be minimized to prevent damage to the lid and latching/hinging mechanisms.**
- **Damage to the RamBox® bin may occur due to heavy/sharp objects placed in bin that shift due to vehicle motion. In order to minimize potential for damage, secure all cargo to prevent movement and protect inside surfaces of bin from heavy/sharp objects with appropriate padding.**

RamBox® Safety Warning

Carefully follow these warnings to help prevent personal injury or damage to your vehicle:

WARNING!

- **Always close the storage bin covers when your vehicle is unattended.**
- **Do not allow children to have access to the storage bins. Once in the storage bin, young children may not be able to escape. If trapped in the storage bin, children can die from suffocation or heat stroke.**
- **In an accident, serious injury could result if the storage bin covers are not properly latched.**
- **Do not drive the vehicle with the storage bin covers open.**
- **Keep the storage bin covers closed and latched while the vehicle is in motion.**
- **Do not use a storage bin latch as a tie down.**

RamBox® Storage Bin Cover Emergency Release Lever — If Equipped

As a security measure, a Storage Bin Cover Emergency Release is built into the storage bin cover latching mechanism.

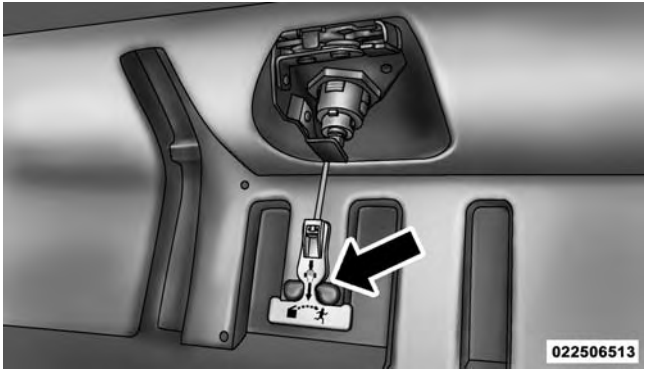

Storage Bin Cover Emergency Release Lever

NOTE: In the event of an individual being locked inside the storage bin, the storage bin cover can be opened from inside of the bin by pulling on the glow-in-the-dark lever attached to the storage bin cover latching mechanism.

Bed Extender — If Equipped

The bed extender has three functional positions:

- Storage Position
- Divider Position
- Extender Position

Storage Position

The storage position for the bed extender is at the front of the truck bed which maximizes the bed cargo area when not in use.

To install the bed extender into the storage position, perform the following:

1. Make sure the center handle is unlocked using the vehicle key and rotate the center handle vertically to release the extender side gates.

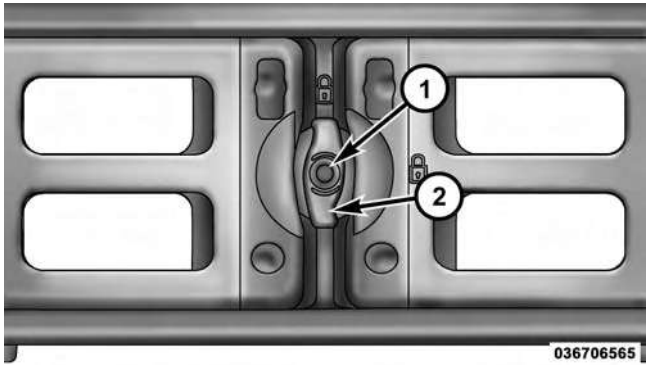

Center Handle And Lock

1 — Center Handle Lock
2 — Handle

2. With the side gates open, position the extender fully forward in the bed against the front panel.

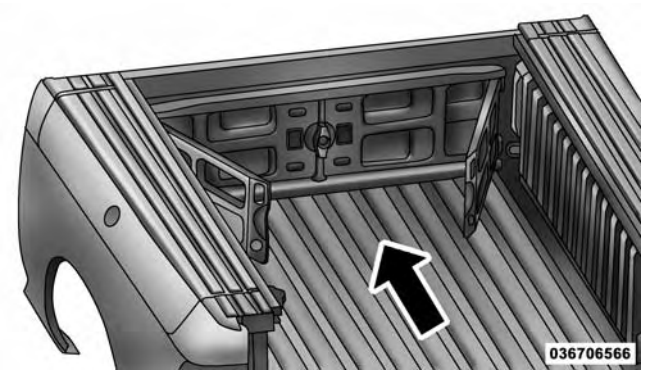

Storage Position

3. Rotate the side gates closed allowing the outboard ends to be positioned in front of the cargo tie down loops.

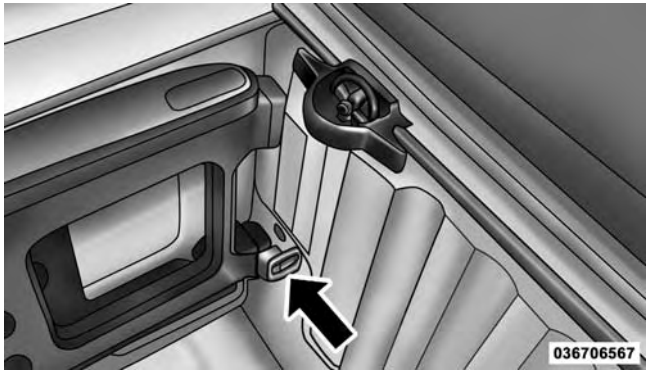

Cargo Tie Down Loop

4. Rotate the center handle horizontally to secure the side gates in the closed position.

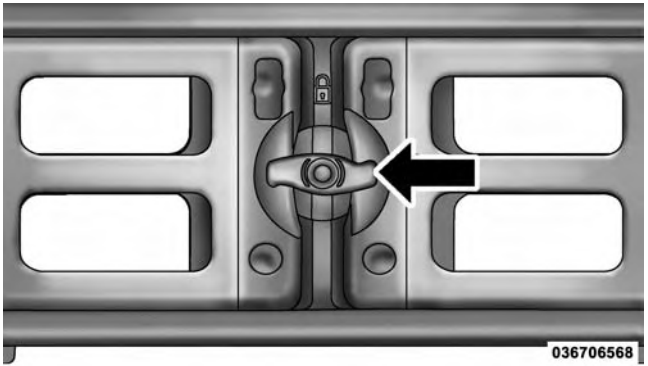

Side Gates Closed

5. Lock the center handle using the vehicle key to secure the panel into place and assist against theft.

Divider Position

The divider position is intended for managing your cargo and assisting in keeping cargo from moving around the bed. There are 11 divider slots along the bed inner panels which allow for various positions to assist in managing your cargo.

To install the bed extender into a divider position perform the following:

1. Make sure the center handle is unlocked using the vehicle key and rotate the center handle vertically to release the extender side gates.

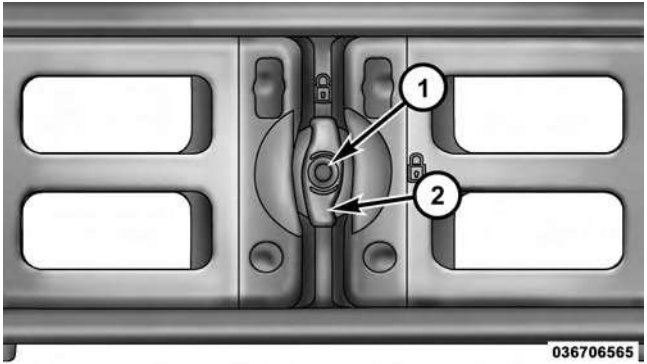

Center Handle And Lock

1 — Center Handle Lock
2 — Handle

2. With the side gates open, position the extender so the outboard ends align with the intended slots in the sides of the bed.

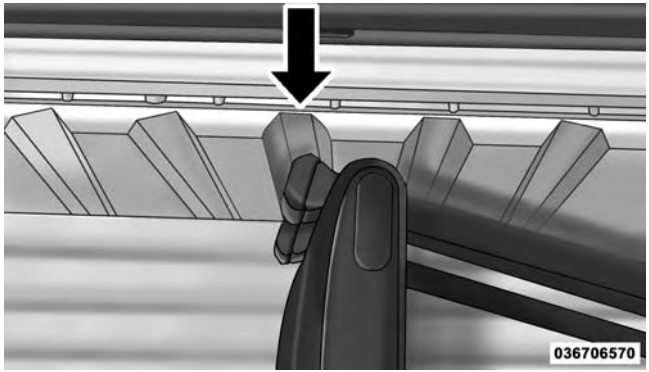

Aligning Gate To Slots

3. Rotate the side gates closed so that the outboard ends are secured into the intended slots of the bed.

4. Rotate the center handle horizontally to secure the side gates in the closed position.

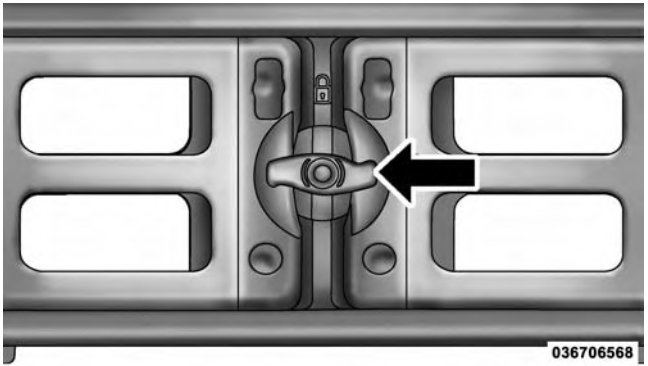

Side Gates Closed

5. Lock the center handle to secure the panel into place and assist against theft.

Extender Position

The extender position allows you to load the bed of the truck beyond the tail gate. The bed extender will add an additional 15 in (38 cm) in the back of the truck when additional cargo room is needed. The extender position utilizes a locating pin and rotating handle located on both sides of the truck bed near the tailgate.

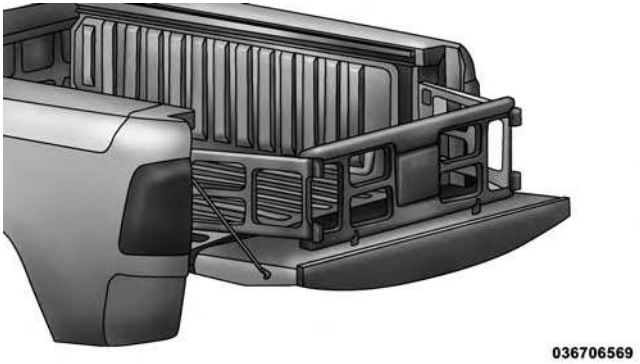

Extender Position

To install the bed extender into the extender position perform the following:

1. Lower the tailgate.

2. Make sure the center handle is unlocked and rotate the center handle vertically in order to release the extender side gates.
3. Fit the end of the side gate ends onto the pin and handle.

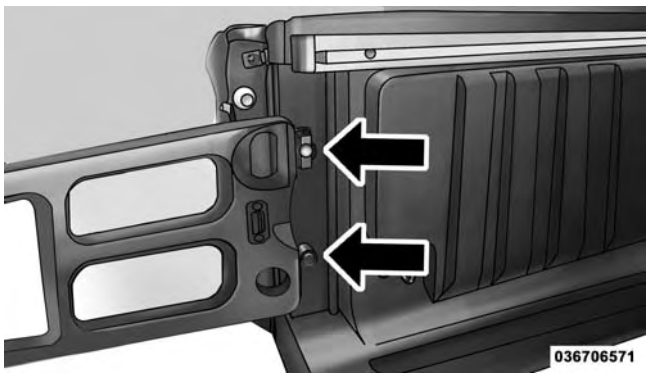

Extender Installation

4. Rotate the handles to the horizontal position to secure into place.

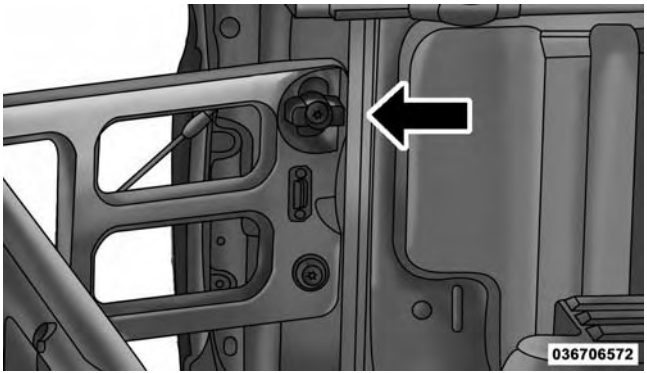

Locking Tab

WARNING!

To reduce the risk of potential injury or property damage:

- **Cargo must be secured.**
- **Do not exceed cargo load rating of your vehicle.**
- **Secure all loads to truck utilizing cargo tie downs.**
- **Extender should not be used as cargo tie down.**
- **When vehicle is in motion do not exceed 150 lbs (68 kg) load on the tailgate.**
- **The bed extender is not intended for off road use.**
- **When not in use, the extender/divider should be in stowed or divider position with the tailgate closed.**
- **When in use all handles are to be in the locked position.**

Bed Rail Tie-Down System

CAUTION!

The maximum load per cleat should not exceed 250 lbs (113 kg) and the angle of the load on each cleat should not exceed 45 degrees above horizontal, or damage to the cleat or cleat rail may occur.

There are two adjustable cleats on each side of the bed that can be used to assist in securing cargo.

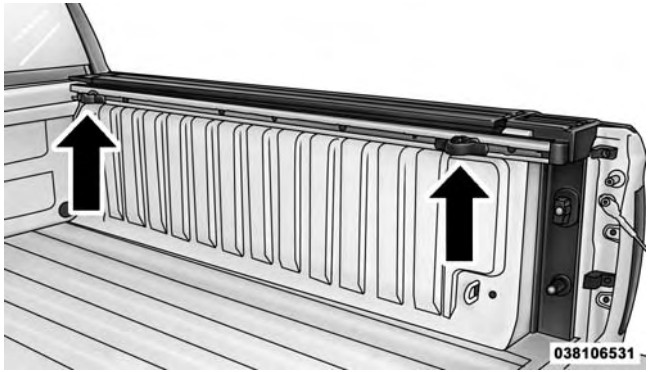

Adjustable Cleats

Each cleat must be located and tightened down in one of the detents, along either rail, in order to keep cargo properly secure.

To move the cleat to any position on the rail, turn the nut counterclockwise, approximately three turns. Then pull out on the cleat and slide it to the detent nearest the desired location. Make sure the cleat is seated in the detent and tighten the nut.

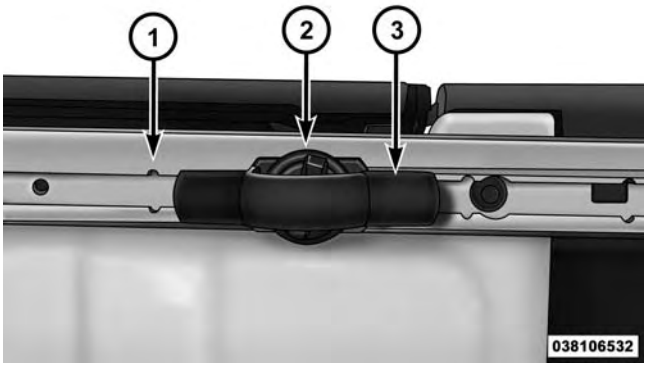

1 — Utility Rail Detent
2 — Cleat Retainer Nut
3 — Utility Rail Cleat

To remove the cleats from the utility rail, remove the end cap by pushing up on the locking tab, located on the bottom of the end cap. Slide the cleat off the end of the rail.

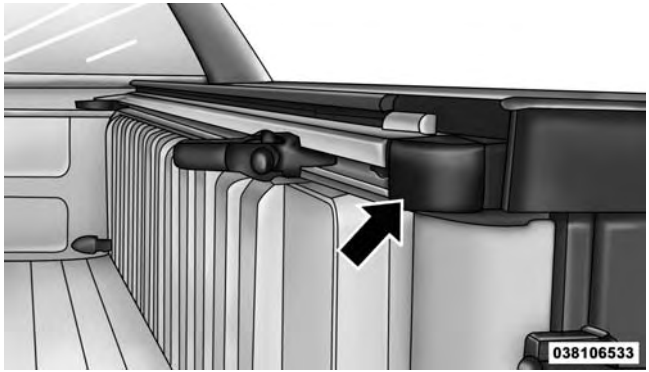

Utility Rail End Cap

SLIDE-IN CAMPERS

Camper Applications

Certain truck models are not recommended for slide-in campers. To determine if your vehicle is excluded, please refer to the "Consumer Information Truck-Camper Loading" document available from your authorized dealer. For safety reasons, follow all instructions in this important document.

NOTE: When a cap or pickup camper is installed on a vehicle, an alternate Center High-Mounted Stop Light (CHMSL) must be provided.

EASY-OFF TAILGATE

To simplify mounting of a camper unit with an overhang, the tailgate can be removed.

NOTE: If your vehicle is equipped with a rear camera or RKE the electrical connector must be disconnected prior to removing the tailgate.

Disconnecting the Rear Camera or Remote Keyless Entry — If Equipped

1. Open the tailgate to access the rear camera or RKE connector bracket located on the rear sill.

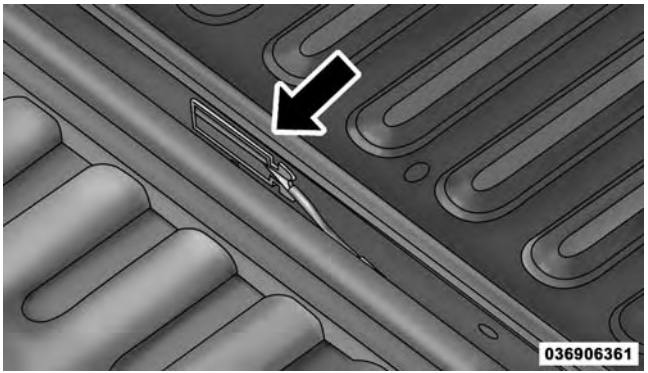

Connector Bracket

2. Remove the connector bracket from the sill by pressing inward in the locking tab.

Locking Tab

3. Disconnect the chassis wiring harness, ensuring the connector bracket does not fall into the sill.
4. Connect the chassis plug and bracket (provided in the glove box) to the chassis wiring harness and insert the bracket back into the sill.
5. Connect the tailgate plug (provided in the glove box) to the tailgate wiring harness to ensure that the terminals do not corrode.
6. Tape the tailgate harness and bracket against the forward-facing surface of the tailgate. This will prevent damaging the connector and bracket when storing or reinstalling the tailgate.

Removing The Tailgate

1. Disconnect the wiring harness for the rear camera and or power locks (if equipped), refer to "Disconnecting the Rear Camera — If Equipped" in this section.
2. Unlatch the tailgate and remove the support cables by releasing the lock tang from the pivot.

NOTE: Make sure tailgate is supported when removing support cables.

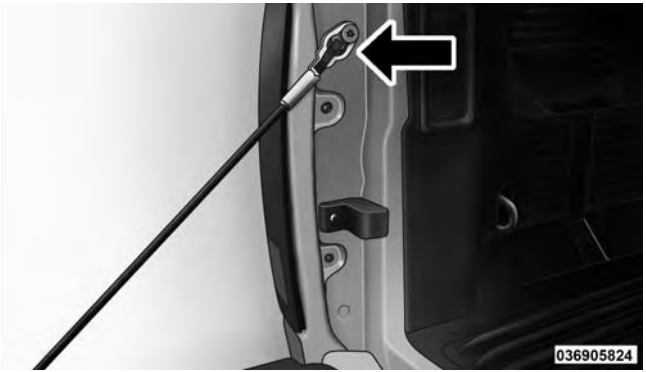

Locking Tang

3. Raise the tailgate to a 45 degree angle.
4. Raise the right side of the tailgate until the right side pivot clears the hanger bracket.
5. Slide the entire tailgate to the right to free the left side pivot.
6. Remove the tailgate from the vehicle.

NOTE: Do not carry the tailgate loose in the truck pickup box.

WARNING!

To avoid inhaling carbon monoxide, which is deadly, the exhaust system on vehicles equipped with "Cap or Slide-In Campers" should extend beyond the overhanging camper compartment and be free of leaks.

Locking Tailgate

The lock is located next to the tailgate handle. The tailgate can be locked using the vehicle key or by locking the truck with the key-fob if equipped with remote keyless entry.

TRI-FOLD TONNEAU COVER-IF EQUIPPED

Tri-Fold Tonneau Cover — If Equipped

Your vehicle may be equipped with a Tri-Fold Tonneau Cover which consists of different features:

- Easy Tri-Fold cover
- Tonneau fore aft locator
- Crosscar inside bed locator
- Front and rear clamps
- Stowage strap
- Locking Capability

NOTE: The Tonneau Cover can be folded up and secured at the front of the box without removing completely.

Tri-Fold Tonneau Cover Removal

To remove the Tonneau Cover follow the following steps:

1. Lower the tailgate.
2. Pull down on the clamp on both driver and passenger sides.
3. Pick up on the cover and fold it back into the second panel.
4. Be sure both clamps are pushed completely down.
5. Pick up on the cover and fold it back into the third panel.
6. Once in the third panel position pull down on the clamp on both sides.
7. Be sure to clip both straps together to insure the cover stays together.
8. With two people remove the cover.

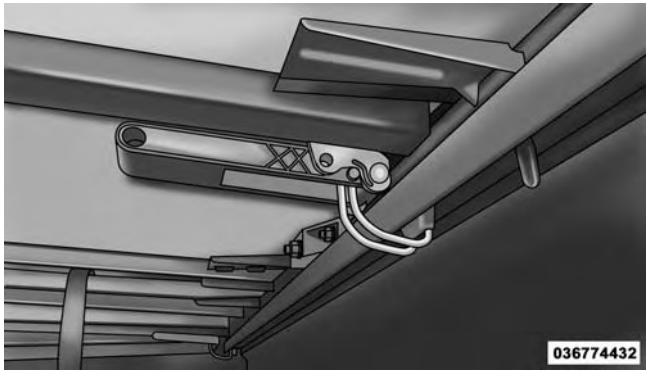

Clamped Position

Semi Clamped Position

NOTE: If clamp wire is damaged replace immediately.

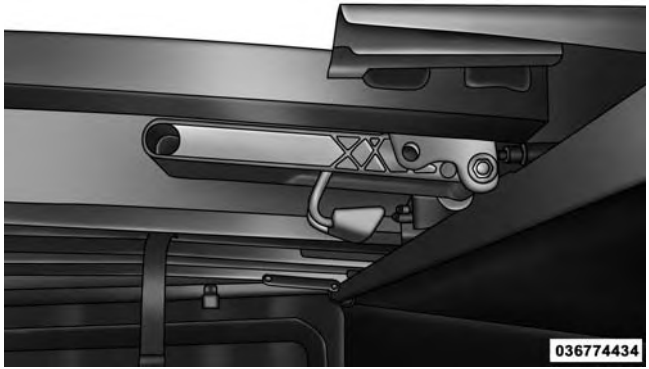

Released Position

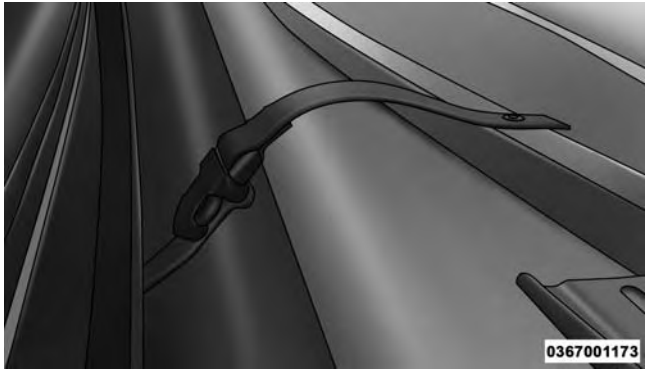

Stowage Strap

NOTE: Be sure the Tonneau Cover has been folded completely before removing.

Tri-Fold Tonneau Cover Installation And Cleaning

Position the folded Tonneau Cover on the truck bed and push the Cover forward against the front of the truck bed. The Tonneau Cover centers itself when placed on the vehicle. Disengage the stowage straps and unfold the Tonneau Cover then attach the rear clamps to the truck bed flange to secure the Tonneau Cover to the vehicle.

The Tonneau Cover clamps can be locked when in the clamped position by placing a lock through the locking hole.

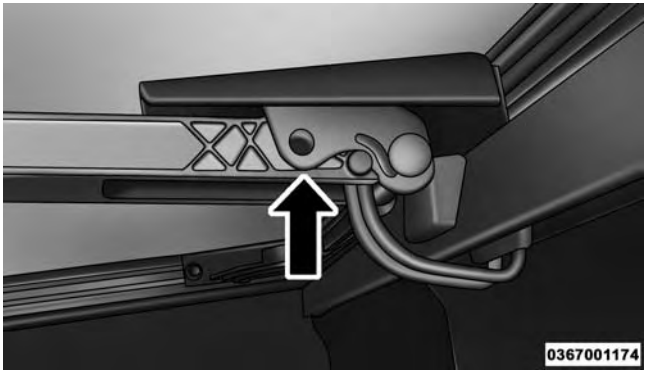

Locking Hole

NOTE: Be sure the Tonneau Cover is secured before driving after installation.

For proper cleaning of the Tonneau Cover use MOPAR® Whitewall &Vinyl Top Cleaner and MOPAR® Leather & Vinyl Conditioner/Protectant.

UNDERSTANDING YOUR INSTRUMENT PANEL

CONTENTS

- INSTRUMENT PANEL FEATURES 273
- INSTRUMENT CLUSTER — PREMIUM 274
- INSTRUMENT CLUSTER DESCRIPTIONS 275
- ELECTRONIC VEHICLE INFORMATION CENTER (EVIC) 285
  - Electronic Vehicle Information Center (EVIC) Displays 288
  - Engine Oil Change Indicator System 290
  - Electronic Vehicle Information Center (EVIC) Messages 291
  - EVIC Red Telltales 296
  - EVIC Amber Telltales 298
  - EVIC White Telltales 300
  - EVIC Green Telltales 300
  - EVIC Selectable Menu Items 300
  - Personal Settings (Customer-Programmable Features) 304
  - Screen Setup Driver Selectable Items 313
- Uconnect® SETTINGS. 315
  - Hard-Keys 315
  - Soft-Keys 316

■ Uconnect® RADIOS — IF EQUIPPED 335

■ iPod®/USB/MP3 CONTROL — IF EQUIPPED. 335

■ STEERING WHEEL AUDIO CONTROLS — IF EQUIPPED 335

□ Radio Operation 336

□ CD Player. 337

■ CD/DVD DISC MAINTENANCE 337

■ RADIO OPERATION AND MOBILE PHONES . . .338

■ CLIMATE CONTROLS 338

□ Manual Climate Controls Without Touch-Screen — If Equipped 338

□ Manual Climate Controls With Touch-Screen — If Equipped 344

□ General Overview 349

□ Summer Operation 356

□ Winter Operation. 356

□ Vacation/Storage 357

□ Window Fogging and Frosting 357

□ Outside Air Intake. 357

□ Operating Tips Chart 358

INSTRUMENT PANEL FEATURES

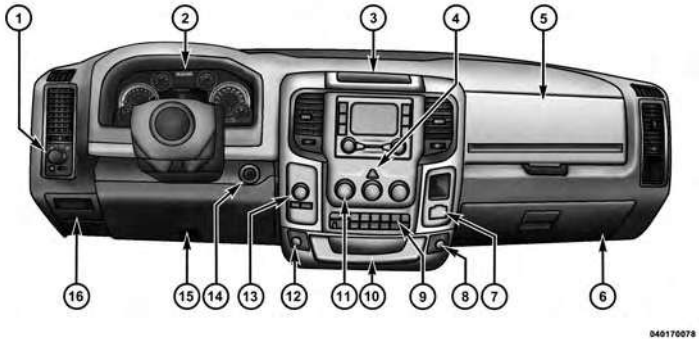

1 — Headlight Switch
2 — Instrument Cluster
3 — Radio
4 — Hazard Switch
5 — Upper Glove Compartment
6 — Lower Glove Compartment
7 — 115v Power Inverter Outlet
8 — Power Outlet
9 — Lower Switch Bank
10 — Instrument Panel Drawer
11 — Climate Controls
12 — Power Outlet/Cigar Lighter
13 — Gear Selector/Transfer Case Position Switch
14 — Ignition Switch
15 — Hood Release
16 — Parking Brake Release

INSTRUMENT CLUSTER — PREMIUM

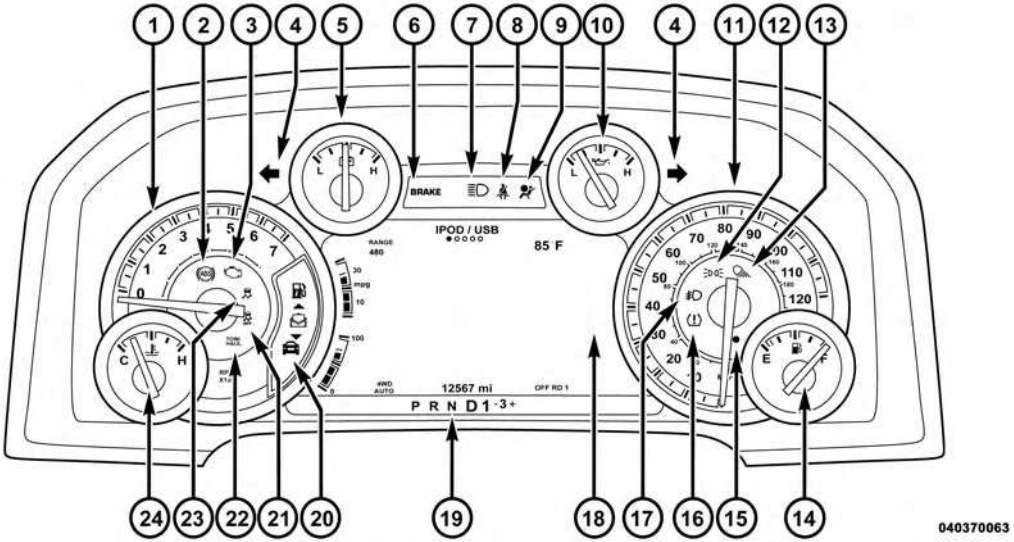

INSTRUMENT CLUSTER DESCRIPTIONS

1. Tachometer

The tachometer indicates engine speed in Revolutions Per Minute (RPM x 1000).

CAUTION!

Do not operate the engine with the tachometer pointer at high RPM for extended periods. Engine operation over 3200 RPM (Redline) can result in significant damage that will not be covered under warranty.

2. Anti-Lock Brake (ABS) Light

This light monitors the Anti-lock Brake System (ABS). The light will turn on when the ignition switch is turned to the ON/RUN position and may stay on for as long as four seconds.

If the ABS light remains on or turns on while driving, it indicates that the anti-lock portion of the brake system is not functioning and that service is required. However, the conventional brake system will continue to operate normally if the BRAKE warning light is not on.

If the ABS light is on, the brake system should be serviced as soon as possible to restore the benefits of anti-lock brakes. If the ABS light does not turn on when the ignition switch is turned to the ON/RUN position, have the light inspected by an authorized dealer.

3. *Malfunction Indicator Light (MIL)*

The Malfunction Indicator Light (MIL) is part of an onboard diagnostic (OBDII) system which monitors the emissions and engine control system. If the vehicle is ready for emissions testing, the light will come on when the ignition is first turned on and remain on, as a bulb check, until the engine is started. If the vehicle is not ready for emissions testing the light will come on when the ignition is first turned on and remain on for 15 seconds, then blink for 5 seconds, and remain on until the vehicle is started. If the bulb does not come on during starting, have the condition investigated promptly.

If this light comes on and remains on while driving, it suggests a potential engine control problem and the need for system service.

Although your vehicle will usually be drivable and not need towing, see your authorized dealer for service as soon as possible.

CAUTION!

Prolonged driving with the Malfunction Indicator Light (MIL) on could cause damage to the engine control system. It also could affect fuel economy and drivability. If the MIL is flashing, severe catalytic converter damage and power loss will soon occur. Immediate service is required.

WARNING!

A malfunctioning catalytic converter, as referenced above, can reach higher temperatures than in normal operating conditions. This can cause a fire if you drive slowly or park over flammable substances such as dry plants, wood, cardboard, etc. This could result in death or serious injury to the driver, occupants or others.

4. Turn Signal Indicators

The arrow will flash with the exterior turn signal when the turn signal lever is operated.

NOTE:

- A continuous chime will sound if the vehicle is driven more than 1 mile (1.6 km) with either turn signal on.
- Check for an inoperative outside light bulb if either indicator remains on and does not flash, or flashes at a rapid rate.

5. Voltmeter

When the engine is running, the gauge indicates the electrical system voltage. The pointer should stay within the normal range if the battery is charged. If the pointer moves to either extreme left or right and remains there during normal driving, the electrical system should be serviced.

NOTE: The voltmeter may show a gauge fluctuation at various engine temperatures. This cycling operation is caused by the post-heat cycle of the intake manifold heater system. The number of cycles and the length of the cycling operation is controlled by the engine control module. Post-heat operation can run for several minutes, and then the electrical system and voltmeter needle will stabilize.

6. Brake Warning Light

This light monitors various brake functions, including brake fluid level and parking brake application. If the brake light turns on it may indicate that the parking brake is applied, that the brake fluid level is low, or that there is a problem with the Anti-lock Brake System reservoir.

If the light remains on when the parking brake has been disengaged, and the fluid level is at the full mark on the master cylinder reservoir, it indicates a possible brake hydraulic system malfunction or that a problem with the Brake Booster has been detected by the Anti-Lock Brake System (ABS) / Electronic Stability Control (ESC) system. In this case, the light will remain on until the condition has been corrected. If the problem is related to the brake booster, the ABS pump will run when applying the brake and a brake pedal pulsation may be felt during each stop.

The dual brake system provides a reserve braking capacity in the event of a failure to a portion of the hydraulic system. A leak in either half of the dual brake system is indicated by the Brake Warning Light, which will turn on when the brake fluid level in the master cylinder has dropped below a specified level.

The light will remain on until the cause is corrected.

NOTE: The light may flash momentarily during sharp cornering maneuvers, which change fluid level conditions. The vehicle should have service performed, and the brake fluid level checked.

If brake failure is indicated, immediate repair is necessary.

WARNING!

Driving a vehicle with the red brake light on is dangerous. Part of the brake system may have failed. It will take longer to stop the vehicle. You could have a collision. Have the vehicle checked immediately.

Vehicles equipped with the ABS, are also equipped with Electronic Brake Force Distribution (EBD). In the event of an EBD failure, the Brake Warning Light will turn on along with the ABS Light. Immediate repair to the ABS system is required.

Operation of the Brake Warning Light can be checked by turning the ignition switch from the OFF position to the ON/RUN position. The light should illuminate for approximately two seconds. The light should then turn off unless the parking brake is applied or a brake fault is detected. If the light does not illuminate, have the light inspected by an authorized dealer.

The light also will turn on when the parking brake is applied with the ignition switch in the ON/RUN position.

NOTE: This light shows only that the parking brake is applied. It does not show the degree of brake application.

7. High Beam Indicator

This light shows that the high beam headlights are on. Push the multifunction control lever away from you to switch the headlights to high beam. Pull the lever toward you to switch the headlights back to low beam. If the driver's door is open, and the headlights or park lights are left on, the high beam indicator light will remain illuminated and a chime will sound.

8. Seat Belt Reminder Light

When the ignition switch is first turned to ON/RUN, this light will turn on for four to eight seconds as a bulb check. During the bulb check, if the driver's seat belt is unbuckled, a chime will sound. After the bulb check or when driving, if the driver's seat belt remains unbuckled, the seat belt reminder light will flash or remain on continuously. Refer to "Occupant Restraints" in "Things To Know Before Starting Your Vehicle" for further information.

9. Air Bag Warning Light

This light will turn on for four to eight seconds as a bulb check when the ignition switch is first turned to ON/RUN. If the light is either not on during starting, stays on, or turns on while driving, have the system inspected at an authorized

dealer as soon as possible. Refer to "Occupant Restraints" in "Things To Know Before Starting Your Vehicle" for further information.

10. Oil Pressure Gauge — If Equipped

The pointer should always indicate some oil pressure when the engine is running. A continuous high or low reading under normal driving conditions may indicate a lubrication system malfunction. Immediate service should be obtained from an authorized dealer.

11. Speedometer

The speedometer shows the vehicle speed in miles per hour and/or kilometers per hour (mph/km/h).

12. Park/Headlight ON Indicator — If Equipped

This indicator will illuminate when the park lights or headlights are turned on.

13. Cargo Light — If Equipped

The cargo light will illuminate when the cargo light is activated by pressing the cargo light button on the headlight switch.

14. Fuel Gauge

Shows level of fuel in tank when ignition switch is in the ON/RUN position.

15. Vehicle Security Light — If Equipped

This light will flash at a fast rate for approximately 15 seconds, when the vehicle security alarm is arming, and then will flash slowly until the vehicle is disarmed.

16. Tire Pressure Monitoring Telltale Light — If Equipped

Each tire, including the spare (if provided), should be checked monthly when cold and inflated to the inflation pressure recommended by the vehicle manufacturer on the vehicle placard or tire inflation pressure label. (If your vehicle has tires of a different size than the size indicated on the vehicle placard or tire inflation pressure label, you should determine the proper tire inflation pressure for those tires.)

As an added safety feature, your vehicle has been equipped with a Tire Pressure Monitoring System (TPMS) that illuminates a low tire pressure telltale when one or more of your tires is significantly under-inflated. Accordingly, when the low tire pressure telltale illuminates, you should stop and check your tires as soon as possible, and inflate them to the proper pressure. Driving on a significantly under-inflated tire causes the tire to overheat and can lead to tire failure. Under-inflation also reduces fuel efficiency and tire tread life, and may affect the vehicle's handling and stopping ability.

Please note that the TPMS is not a substitute for proper tire maintenance, and it is the driver's responsibility to maintain correct tire pressure, even if under-inflation has not reached the level to trigger illumination of the TPMS low tire pressure telltale.

Your vehicle has also been equipped with a TPMS malfunction indicator to indicate when the system is not operating properly. The TPMS malfunction indicator is combined with the low tire pressure telltale. When the system detects a malfunction, the telltale will flash for approximately one minute and then remain continuously illuminated. This sequence will continue upon subsequent vehicle start-ups as long as the malfunction exists. When the malfunction indicator is illuminated, the system may not be able to detect or signal low tire pressure as intended. TPMS malfunctions may occur for a variety of reasons, including the installation of replacement or

alternate tires or wheels on the vehicle that prevent the TPMS from functioning properly. Always check the TPMS malfunction telltale after replacing one or more tires or wheels on your vehicle, to ensure that the replacement or alternate tires and wheels allow the TPMS to continue to function properly.

CAUTION!

The TPMS has been optimized for the original equipment tires and wheels. TPMS pressures and warning have been established for the tire size equipped on your vehicle. Undesirable system operation or sensor damage may result when using replacement equipment that is not of the same size, type, and/or style. Aftermarket wheels can cause sensor damage. Do not use tire sealant from a can or balance beads if your vehicle is equipped with a TPMS, as damage to the sensors may result.

NOTE: The TPMS telltale is also accompanied by a "Low Tire" message in the odometer (Base Cluster), or in the Electronic Vehicle Information Center (EVIC) screen indicating "Low Tire" for EVIC enabled clusters.

17. Front Fog Light Indicator — If Equipped

This indicator will illuminate when the front fog lights are on.

18. Electronic Vehicle Information Center (EVIC)

The Electronic Vehicle Information Center (EVIC) features a driver-interactive display that is located in the instrument cluster. For further information, refer to "Electronic Vehicle Information Center (EVIC)".

19. Shift Lever Indicator

The Shift Lever Indicator is self-contained within the instrument cluster. It displays the gear position of the automatic transmission.

NOTE: The highest available transmission gear is displayed in the lower right corner of the Electronic Vehicle Information Center (EVIC) whenever the Electronic Range Select (ERS) feature is active. Use the +/- selector on the shift lever to activate ERS. Refer to "Automatic Transmission" in "Starting And Operating" for further information.

20. Electronic Vehicle Information Center (EVIC) Menu

The Electronic Vehicle Information Center (EVIC) features a driver-interactive display that is located in the instrument cluster. For further information, refer to "Electronic Vehicle Information Center (EVIC)".

21. Electronic Stability Control (ESC) OFF Indicator Light — If Equipped

This light indicates the Electronic Stability Control (ESC) is off.

22. TOW/HAUL

The TOW HAUL button is located on the center stack upper switch bank. This light will illuminate when TOW HAUL mode is selected.

23. Electronic Stability Control (ESC) Activation/ Malfunction Indicator Light — If Equipped

The "ESC Activation/Malfunction Indicator Light" in the instrument cluster will come on when the ignition switch is turned to the ON/RUN position. It should go out with the engine running. If the "ESC Activation/Malfunction Indicator Light" comes on continuously with the engine running, a malfunction has been detected in the ESC system. If this light remains on after several ignition cycles, and the vehicle has been driven several miles (kilometers) at speeds greater than 30 mph (48 km/h), see your authorized dealer as soon as possible to have the problem diagnosed and corrected.

NOTE:

- The "ESC Off Indicator Light" and the "ESC Activation/Malfunction Indicator Light" come on momentarily each time the ignition switch is turned to ON/RUN.
- Each time the ignition is turned to ON/RUN, the ESC system will be ON, even if it was turned off previously.
- The ESC system will make buzzing or clicking sounds when it is active. This is normal; the sounds will stop when ESC becomes inactive following the maneuver that caused the ESC activation.

24. Temperature Gauge

The temperature gauge shows engine coolant temperature. Any reading within the normal range indicates that the engine cooling system is operating satisfactorily.

The gauge pointer will likely indicate a higher temperature when driving in hot weather, up mountain grades, or when towing a trailer. It should not be allowed to exceed the upper limits of the normal operating range.

CAUTION!

Driving with a hot engine cooling system could damage your vehicle. If the temperature gauge reads "H" pull over and stop the vehicle. Idle the vehicle with the air conditioner turned off until the pointer drops back into the normal range. If the pointer remains on the "H" and you hear continuous chimes, turn the engine off immediately and call an authorized dealer for service.

WARNING!

A hot engine cooling system is dangerous. You or others could be badly burned by steam or boiling coolant. You may want to call an authorized dealer for service if your vehicle overheats. If you decide to look under the hood yourself, see "Maintaining Your Vehicle." Follow the warnings under the "Cooling System Pressure Cap" paragraph.

ELECTRONIC VEHICLE INFORMATION CENTER (EVIC)

040971462

The Electronic Vehicle Information Center (EVIC) features a driver-interactive display that is located in the instrument cluster.

This system allows the driver to select a variety of useful information by pressing the switches mounted on the steering wheel. The EVIC consists of the following:

- Digital Speedometer
- Vehicle Info
- Fuel Economy Info
- Trip A
- Trip B
- Stop/Start Info (If Equipped)
- Trailer Tow
- Audio
- Stored Messages
- Screen Setup
- Vehicle Settings (Not Equipped with a Uconnect® 5.0 & 8.4 radio)

The system allows the driver to select information by pressing the following buttons mounted on the steering wheel:

040971549

EVIC Steering Wheels Buttons

- *UP Arrow Button*

△ Press and release the UP arrow button to scroll upward through the main menu and sub-menus (Fuel Economy, Trip A, Trip B, Audio, Stored Messages, Screen Set Up).

- *DOWN Arrow Button*

▽ Press and release the DOWN arrow button to scroll downward through the main menu and sub-menus (Fuel Economy, Trip A, Trip B, Audio, Stored Messages, Screen Set Up).

- *SELECT/RIGHT Arrow Button*

▷ Press and release the SELECT/RIGHT arrow button to access/select the information screens or sub-menu screens of a main menu item. Press and hold the SELECT/RIGHT arrow button for two seconds to reset displayed/selected features that can be reset.

- *LEFT Arrow Button*

◁ Press the LEFT arrow button to return to the main menu from an info screen or sub-menu item.

Electronic Vehicle Information Center (EVIC) Displays

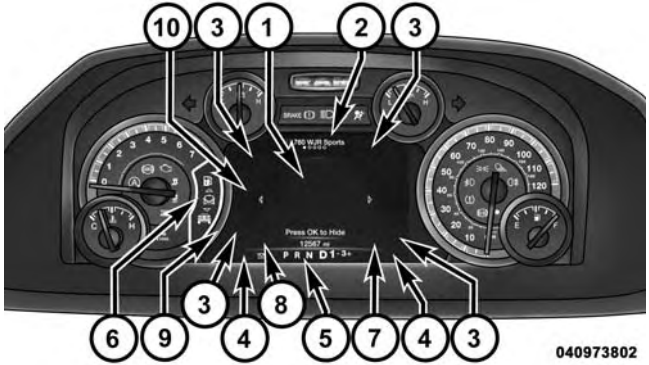

The EVIC displays are located in the center portion of the cluster and consists of eight sections:

1. Main Screen — The inner ring of the display will illuminate in grey under normal conditions, yellow for non critical warnings, red for critical warnings and white for on demand information.
2. Audio / Phone Information and Sub-menu Information — Whenever there are sub-menus available, the position within the sub-menus is shown here.
3. Selectable Information (Compass, Temp, Range to Empty, Trip A, Trip B, Average MPG, Trailer Trip (distance only), Trailer Brake Gain)
4. Telltales/Indicators
5. Shift Lever Status (PRNDL)

6. Selectable Menu Icons
7. Air Suspension Status – If Equipped
8. 4WD Status
9. Selectable Gauge 2
10. Selectable Gauge 1

The main display area will normally display the main menu or the screens of a selected feature of the main menu. The main display area also displays "pop up" messages that consist of approximately 60 possible warning or information messages. These pop up messages fall into several categories:

- ***Five Second Stored Messages***

When the appropriate conditions occur, this type of message takes control of the main display area for five seconds and then returns to the previous screen. Most of the messages of this type are then stored (as long as the condition that activated it remains active) and can be reviewed from the "Messages" main menu item. As long as there is a stored message, an "i" will be displayed in the EVIC's compass/outside temp line. Examples of this message type are "Right Front Turn Signal Lamp Out" and "Low Tire Pressure".

- ***Unstored Messages***

This message type is displayed indefinitely or until the condition that activated the message is cleared. Examples of this message type are "Turn Signal On" (if a turn signal is left on) and "Lights On" (if driver leaves the vehicle).

- ***Unstored Messages Until RUN***

These messages deal primarily with the Remote Start feature. This message type is displayed until the ignition is in the RUN state. Examples of this message type are "Remote Start Aborted - Door Ajar" and "Press Brake Pedal and Push Button to Start".

- *Five Second Unstored Messages*

When the appropriate conditions occur, this type of message takes control of the main display area for five seconds and then returns to the previous screen. An example of this message type is "Automatic High Beams On".

Engine Oil Change Indicator System

Oil Change Required

Your vehicle is equipped with an engine oil change indicator system. The "Oil Change Required" message will flash in the EVIC display for approximately 10 seconds after a single chime has sounded, to indicate the next scheduled oil change interval. The engine oil change indicator system is duty cycle based, which means the engine oil change interval may fluctuate, dependent upon your personal driving style.

Unless reset, this message will continue to display each time you turn the ignition switch to the ON/RUN position or cycle the ignition to the ON/RUN position if equipped with Keyless Enter-N-Go™. To turn off the message temporarily, press and release the MENU button. To reset the oil change indicator system (after performing the scheduled maintenance) refer to the following procedure.

Vehicles Equipped With Keyless Enter-N-Go™

1. Without pressing the brake pedal, press the ENGINE START/STOP button and cycle the ignition to the ON/ RUN position (Do not start the engine.)
2. Fully depress the accelerator pedal, slowly, three times within 10 seconds.
3. Without pressing the brake pedal, press the ENGINE START/STOP button once to return the ignition to the OFF/LOCK position.

Vehicles Not Equipped With Keyless Enter-N-Go™

1. Turn the ignition switch to the ON/RUN position (Do not start the engine.)
2. Fully depress the accelerator pedal, slowly, three times within 10 seconds.
3. Turn the ignition switch to the OFF/LOCK position.

NOTE: If the indicator message illuminates when you start the vehicle, the oil change indicator system did not reset. If necessary, repeat this procedure.

Electronic Vehicle Information Center (EVIC) Messages

- Front Seatbelts Unbuckled
- Driver Seatbelt Unbuckled
- Passenger Seatbelt Unbuckled
- Service Airbag System
- Traction Control Off
- Washer Fluid Low
- Oil Pressure Low
- Oil Change Due
- Fuel Low
- Service Antilock Brake System
- Service Electronic Throttle Control
- Service Power Steering
- Cruise Off
- Cruise Ready
- Cruise Set To XXX MPH
- Tire Pressure Screen With Low Tire(s) “Inflate Tire to XX”

- Service Tire Pressure System
- Parking Brake Engaged
- Brake Fluid Low
- Service Electronic Braking System
- Engine Temperature Hot
- Battery Voltage Low
- Service Electronic Throttle Control
- Lights On
- Right Turn Signal Light Out
- Left Turn Signal Light Out
- Turn Signal On
- Vehicle Not in Park
- Key in Ignition
- Key in Ignition Lights On
- Remote Start Active Key to Run
- Remote Start Active Push Start Button
- Remote Start Aborted Fuel Low
- Remote Start Aborted Too Cold
- Remote Start Aborted Door Open
- Remote Start Aborted Hood Open
- Remote Start Aborted Trunk Open
- Remote Start Aborted Time Expired
- Remote Start Disabled Start to Reset
- Service Airbag System
- Service Airbag Warning Light
- Driver Seatbelt Unbuckled

- Passenger Seatbelt Unbuckled
- Front Seatbelts Unbuckled
- Door Open
- Doors Open
- Gear Not Available
- Shift Not Allowed
- Shift to Neutral then Drive or Reverse
- Autostick Unavailable Service Required
- Automatic Unavailable Use Autostick Service Req.
- Transmission Getting Hot Press Brake
- Trans. Hot Stop Safely Shift to Park Wait to Cool
- Transmission Cool Ready to Drive
- Trailer Brake Disconnected
- Service Transmission
- Service Shifter
- Engage Park Brake to Prevent Rolling
- Transmission Too cold Idle with Engine On
- Washer Fluid Low
- Service Air Suspension System
- Normal Ride Height Achieved
- Aerodynamic Ride Height Achieved
- Off Road 1 Ride Height Achieved
- Off Road 2 Ride Height Achieved
- Entry/Exit Ride Height Achieved
- Selected Ride Height Not Permitted
- Service Air Suspension System Immediately

- Reduce Speed To Maintain Selected Ride Height
- Air Suspension System Cooling Down Please Wait
- Vehicle Cannot Be Lowered Door Open
- Off Road 2 Watch For Clearance
- Entry/Exit Watch For Clearance
- Air Suspension Temporarily Disabled For jacking And Tire Change
- Battery Low Start Engine To Change Ride Height
- Stop/Start Ready – If Equipped
- Stop/Start Not Ready – If Equipped
- Stop/Start Not Ready Hood Open – If Equipped
- Stop/Start Not Ready Battery Charging – If Equipped
- Stop/Start Not Ready Trailer Tow/Haul Selected – If Equipped
- Stop/Start Not Ready 4WD/Low Range Selected – If Equipped
- Stop/Start Not Ready Fuel Level Low – If Equipped
- Stop/Start Not Ready Steep Incline – If Equipped
- Stop/Start Not Ready Extreme Outside Temperature – If Equipped
- Stop/Start Not Ready Engine Temperature Too High – If Equipped
- Stop/Start Not Ready Engine Temperature Too Low – If Equipped
- Stop/Start Not Ready Driver Seatbelt Unbuckled – If Equipped
- Stop/Start Not Ready Driver Door Open – If Equipped
- Stop/Start Not Ready Cabin Cooling Or Heating – If Equipped

- Stop/Start Not Ready Not Ready Max Cooling Or Heating – If Equipped
- Stop/Start Not Ready Max Cooling Or Heating Selected – If Equipped
- Stop/Start Not Ready Front Defrost Selected – If Equipped
- Stop/Start Not Ready Steering Wheel Turned – If Equipped
- Stop/Start Autostop Active – If Equipped
- Stop/Start To Restart Press Clutch Or Shift To Neutral – If Equipped
- Stop/Start Req'd Fault Detected – If Equipped
- Stop/Start Cannot Autostart Hood Open – If Equipped
- Stop/Start Unavailable Service Battery – If Equipped
- Stop/Start Unavailable Service Stop/Start System – If Equipped
- Stop/Start To Restart Shift Out Of Park – If Equipped
- Stop/Start Off – If Equipped
- Autostop Duration – If Equipped

The Reconfigurable Telltales section is divided into the white telltales area on the right, amber telltales in the middle, and red telltales on the left.

EVIC Red Telltales

This area will show reconfigurable red telltales. These telltales include:

- *Door Ajar*

This light will turn on to indicate that one or more doors may be ajar.

- *Oil Pressure Warning Light*

This telltale indicates low engine oil pressure. If the light turns on while driving, stop the vehicle and shut off the engine as soon as possible. A chime will sound for four minutes when this light turns on.

Do not operate the vehicle until the cause is corrected. This light does not show how much oil is in the engine. The engine oil level must be checked under the hood.

- *Oil Temperature Warning Light*

This telltale indicates engine oil temperature is high. If the light turns on while driving, stop the vehicle and shut off the engine as soon as possible.

- *Charging System Light*

This light shows the status of the electrical charging system. If the light stays on or comes on while driving, turn off some of the vehicle's non-essential electrical devices or increase engine speed (if at idle). If the charging system light remains on, it means that the vehicle is experiencing a problem with the charging system. Obtain SERVICE IMMEDIATELY. See an authorized dealer.

If jump starting is required, refer to "Jump Starting Procedures" in "What To Do In Emergencies".

- *Electronic Throttle Control (ETC) Light*

This light informs you of a problem with the Electronic Throttle Control (ETC) system. The light will come on when the ignition is first turned ON and remain on briefly as a bulb check. If the light does not come on during starting, have the system checked by an authorized dealer.

If a problem is detected, the light will come on while the engine is running. Cycle the ignition key when the vehicle has completely stopped and the shift lever is placed in the PARK position. The light should turn off.

If the light remains lit with the engine running, your vehicle will usually be drivable. However, see an authorized dealer for service as soon as possible. If the light is flashing when the engine is running, immediate service is required. You may experience reduced performance, an elevated/rough idle or engine stall and your vehicle may require towing.

- *Engine Temperature Warning Light*

This light warns of an overheated engine condition. As temperatures rise and the gauge approaches **H,** this indicator will illuminate and a single chime will sound after reaching a set threshold. Further overheating will cause the temperature gauge to pass **H,** a continuous chime will occur until the engine is allowed to cool.

If the light turns on while driving, safely pull over and stop the vehicle. If the A/C system is on, turn it off. Also, shift the transmission into NEUTRAL and idle the vehicle. If the temperature reading does not return to normal, turn the engine off immediately and call for service. Refer to “If Your Engine Overheats” in “What To Do In Emergencies” for more information.

- *Electric Power Steering Malfunction Warning Light*

This telltale is on when the Electric Power Steering is not operating and needs service.

- *Trailer Brake Disconnected Warning Light*

This telltale is on when the Trailer Brake has been disconnected.

EVIC Amber Telltales

This area will show reconfigurable amber caution telltales. These telltales include:

- *Low Fuel Telltale*

When the fuel level reaches approximately 3.0 gal (11.0 L) this light will turn on, and remain on until fuel is added.

- *Windshield Washer Fluid Low Indicator*

This telltale will turn on to indicate the windshield washer fluid is low.

- *Low Coolant Level Indicator*

This telltale will turn on to indicate the vehicle coolant level is low.

- *Transmission Temperature Warning Telltale*

This telltale indicates that the transmission fluid temperature is running hot. This may occur with severe usage, such as trailer towing. If this telltale turns on, safely pull over and stop the vehicle. Then, shift the transmission into NEUTRAL and run the engine at idle or faster until the light turns off.

- *Air Suspension Payload Protection Telltale — If Equipped*

This telltale will turn on to indicate that the maximum payload may have been exceeded or load leveling cannot be achieved at its current ride height.

Protection Mode will automatically be selected in order to "protect" the air suspension system, air suspension adjustment is limited due to payload.

- *Service Stop/Start System Telltale — If Equipped*

This telltale will turn on to indicate that the Stop/Start is Unavailable, service Stop/Start system.

- *Loose Fuel Filler Cap*

This telltale will turn on to indicate that the fuel filler cap may be loose.

CAUTION!

Continuous driving with the Transmission Temperature Warning Light illuminated will eventually cause severe transmission damage or transmission failure.

WARNING!

If you continue operating the vehicle when the Transmission Temperature Warning Light is illuminated you could cause the fluid to boil over, come in contact with hot engine or exhaust components and cause a fire.

EVIC White Telltales

- *Electronic Speed Control Ready*

This light will turn on when the electronic speed control is ON. For further information, refer to "Electronic Speed Control" in "Understanding The Features Of Your Vehicle."

- *Hill Descent Control Indicator Light — If Equipped*

The symbol indicates the status of the Hill Decent Control (HDC) feature. The lamp will be on solid when HDC is armed. HDC can only be armed when the transfer case is in the "4WD Low" position and the vehicle speed is less then 30 mph (48 km/h). If these conditions are not met while attempting to use the HDC feature, the HDC indicator lamp will flash on/off.

EVIC Green Telltales

- *Electronic Speed Control SET*

This telltale will illuminate green when the electronic speed control is SET. For further information, refer to "Electronic Speed Control" in "Understanding The Features Of Your Vehicle."

EVIC Selectable Menu Items

Press and release the UP or DOWN arrow buttons until the desired Selectable Menu icon is highlighted in the EVIC.

Digital Speedometer

Press and release the UP or DOWN arrow button until the Digital display icon is highlighted in the EVIC. Press and release the SELECT/RIGHT arrow button to change the display between km/h and mph.

Vehicle Info (Customer Information Features)

Press and release the UP or DOWN arrow button until the Vehicle Info icon is highlighted in the EVIC. Press and release the SELECT/RIGHT arrow button and Coolant Temp will be displayed. Press the LEFT or SELECT/RIGHT arrow button to scroll through the following information sub-menus:

Air Suspension – If Equipped

Transmission Temperature – Automatic Transmission Only

Oil Temp

Oil Life

Multimeter

Tire Pressure Monitoring System (1500 & 2500 Series)

Press and release the UP or DOWN arrow button until "Tire Pressure" is highlighted in the EVIC. Press and release the SELECT/RIGHT arrow button and one of the following will be displayed:

A vehicle ICON is displayed with tire pressure values in each corner of the ICON.

Tire Pressure Information System (3500 Series Heavy Duty Ram Trucks)

Press and release the UP or DOWN arrow button until "Tire Pressure" is highlighted in the EVIC. Press and release the SELECT/RIGHT arrow button and one of the following will be displayed:

A vehicle ICON is displayed with the tire pressure values in each corner of the ICON.

If the Tire Pressure system requires service, “Service Tire Pressure System” is displayed.

Tire PSI is an information only function and cannot be reset. Press and release the LEFT arrow button to return to the main menu.

Refer to the ″Tire Pressure Information System (TPIS) under ″Starting and Operating″ for further information.

Fuel Economy

Press and release the UP or DOWN arrow button until the Fuel Economy icon is highlighted.

- Average Fuel Economy/Miles Per Gallon (MPG or L/100 km with Bargraph)
- Range To Empty (RTE)
- Current Miles Per Gallon (MPG)

Trip A

Press and release the UP or DOWN arrow button until the Trip A icon is highlighted in the EVIC. The Trip A information will display the following:

- Distance
- Average Fuel Economy
- Average Speed
- Elapsed Time

Hold the SELECT/RIGHT arrow button to reset all the information.

Trip B

Press and release Up & Down arrow button until the Trip B icon is highlighted in the EVIC. The Trip B information will display the following:

- Distance
- Average Fuel Economy
- Average Speed
- Elapsed Time

Hold the SELECT/RIGHT arrow button to reset all the information.

Stop/Start – If Equipped

Press and release the UP or DOWN arrow button until the Stop/Start icon is highlighted in the EVIC. Press and release the SELECT/RIGHT arrow button to display the Stop/Start status.

Trailer Tow

Press and release the UP or DOWN arrow button until the Trailer Tow icon is highlighted. Press the SELECT/RIGHT arrow button and the next screen will display the following trailer trip information:

- Trailer Trip
- Trailer Brake

Audio

Press and release the UP or DOWN arrow button until the Audio display icon is highlighted in the EVIC. Press and release the SELECT/RIGHT arrow button to display the active source.

Stored Messages

Press and release the UP arrow button until the Messages display icon is highlighted in the EVIC. This feature shows the number of stored warning messages. Pressing the RIGHT arrow button will allow you to see what the stored messages are.

Screen Setup

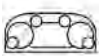

Press and release the UP or DOWN arrow button until the Screen Setup display icon is highlighted in the EVIC. Press and release the SELECT/RIGHT arrow button to enter the Screen Setup sub-menu. The Screen Setup feature allows you to change what information is displayed in the instrument cluster as well as the location that information is displayed.

Personal Settings (Customer-Programmable Features)

For vehicles equipped a 3.5″ EVIC screen

Personal Settings allows the driver to set and recall features when the transmission is in PARK.

Press and release the UP and DOWN button until Personal Settings displays in the EVIC.

Press and release the SELECT/RIGHT arrow button to display one of the following choices.

For vehicles equipped with a 7″ EVIC screen and not equipped with a Uconnect® 8.4 radio.

Personal Settings allows the driver to set and recall features when the transmission is in PARK.

Use the UP or DOWN button until Personal Settings displays in the EVIC.

Press and release the SELECT/RIGHT arrow button to Enter Vehicle Settings

Use the UP or DOWN button to display one of the following choices.

NOTE: Your vehicle may or may not be equipped with the following settings.

Language

When in this display you may select one of six languages for all display nomenclature, including the trip functions and the navigation system (if equipped). Press the UP or DOWN button while in this display and scroll through the language choices. Press the SELECT button to select English, Spanish (Español), French (Français), Italian, German, Dutch. Then, as you continue, the information will display in the selected language.

Units

Press and release the UP or DOWN button until “Units” displays in the EVIC and press the SELECT button. The EVIC, odometer, and navigation system (if equipped) can be changed between English and Metric units of measure. To make your selection, press and release the SELECT button the selected setting will be displayed.

Nav–Turn By Turn – If Equipped

When this feature is selected, the navigation system utilizes voice commands, guiding through the drive route, mile by mile, turn-by-turn until the final destination is reached. To make your selection, press and release the SELECT button until a check-mark appears next to

the feature showing the system has been activated or the check-mark is removed showing the system has been deactivated.

Park Assist System — If Equipped

The Rear Park Assist system will scan for objects behind the vehicle when the transmission is in the REVERSE position and the vehicle speed is less than 11 mph (18 km/h). The system can be enabled with Sound Only or Sound and Display. To make your selection, scroll up or down until the preferred setting is highlighted, then press and release the SELECT button until a check-mark appears next to the setting, showing that the setting has been selected. Refer to "Rear Park Assist System" in "Understanding The Features Of Your Vehicle" for system function and operating information.

Tilt Mirror In Reverse

When this feature is selected and the shift lever is placed in reverse gear, the side mirrors tilt downward to allow the driver to see into the previous blind spot and avoid objects in close proximity to the rear of the vehicle. To make your selection, press and release the SELECT button until a check-mark appears next to the feature showing the system has been activated or the check-mark is removed showing the system has been deactivated.

Auto Wipers — If Equipped

When ON is selected, the system will automatically activate the windshield wipers if it senses moisture on the windshield. To make your selection, press and release the SELECT button until a check-mark appears next to the feature showing the system has been activated or the check-mark is removed showing the system has been deactivated. When the system is deactivated, the system reverts to the standard intermittent wiper operation.

Hill Start Assist (HSA)

When on is selected, the HSA system is active. Refer to "Electronic Brake Control System" in "Starting And

Operating" for system function and operating information. To make your selection, press and release the SELECT button until a check-mark appears next to the feature showing the system has been activated or the check-mark is removed showing the system has been deactivated.

Headlamp Off Delay

When this feature is selected, the driver can choose to have the headlights remain on for 0, 30, 60, or 90 seconds when exiting the vehicle. To make your selection, scroll up or down until the preferred setting is highlighted, then press and release the SELECT button until a check-mark appears next to the setting, showing that the setting has been selected.

Illuminated Approach

When this feature is selected, the headlights will activate and remain on for 0, 30, 60, or 90 seconds when the doors are unlocked with the RKE transmitter. To make your selection, scroll up or down until the preferred setting is highlighted, then press and release the SELECT button until a check-mark appears next to the setting, showing that the setting has been selected.

Headlamps With Wipers

When this feature is selected and the HEADLIGHT switch is in the AUTO position, the headlights will turn on approximately 10 seconds after the wipers are turned on. The headlights will also turn off when the wipers are turned off if they were turned on by this feature. To make your selection, press and release the SELECT button until a check-mark appears next to the feature showing the system has been activated or the check-mark is removed showing the system has been deactivated.

Automatic High Beams — If Equipped

When this feature is selected, the high beam headlights will deactivate automatically under certain conditions. To make your selection, press and release the SELECT

button until a check-mark appears next to the feature showing the system has been activated or the check-mark is removed showing the system has been deactivated. Refer to "Lights/SmartBeam™ — If Equipped" in "Understanding The Features Of Your Vehicle" for further information.

Flash Lamps With Lock

When this feature is selected, the front and rear turn signals will flash when the doors are locked or unlocked with the RKE transmitter. This feature may be selected with or without the sound horn on lock feature selected. To make your selection, press and release the SELECT button until a check-mark appears next to the feature showing the system has been activated or the check-mark is removed showing the system has been deactivated.

Auto Lock Doors

When this feature is selected, all doors will lock automatically when the vehicle reaches a speed of 15 mph (24 km/h). To make your selection, press and release the SELECT button until a check-mark appears next to the feature showing the system has been activated, or the check-mark is removed showing the system has been deactivated.

Auto Unlock Doors

When this feature is selected, all doors will unlock when the vehicle is stopped and the transmission is in the PARK or NEUTRAL position and the driver's door is opened. To make your selection, press and release the SELECT button until a check-mark appears next to the feature showing the system has been activated, or the check-mark is removed showing the system has been deactivated.

Horn with Remote Start

When this feature is selected, a short horn sound will occur when the RKE transmitter REMOTE START button is pressed. To make your selection, press and release the

SELECT button until a check-mark appears next to the feature showing the system has been activated or the check-mark is removed showing the system has been deactivated.

Sound Horn With Remote Lock

When this feature is selected, a short horn sound will occur when the RKE transmitter LOCK button is pressed. This feature may be selected with or without the Flash Lamps with Lock feature. To make your selection, press and release the SELECT button until a check-mark appears next to the feature showing the system has been activated or the check-mark is removed showing the system has been deactivated.

Remote Unlock Sequence

When **Unlock Driver Door Only On 1st Press** is selected, only the driver's door will unlock on the first press of the RKE transmitter UNLOCK button. When Driver Door 1st Press is selected, you must press the RKE transmitter UNLOCK button twice to unlock the passenger's doors. When **Unlock All Doors On 1st Press** is selected, all of the doors will unlock on the first press of the RKE transmitter UNLOCK button. To make your selection, scroll up or down until the preferred setting is highlighted, then press and release the SELECT button until a check-mark appears next to the setting, showing that the setting has been selected.

Key Fob Linked To Memory

When this feature is selected the memory seat, mirror, and radio settings will return to the memory set position when the RKE transmitter UNLOCK button is pressed. If this feature is not selected then the memory seat, mirror, and radio settings can only return to the memory set position using the seat mounted switch. To make your selection, press and release the SELECT button until a check-mark appears next to the feature showing the system has been activated or the check-mark is removed showing the system has been deactivated.

Keyless Enter-N-Go™ (Passive Entry)

This feature allows you to lock and unlock the vehicle's door(s) without having to press the RKE transmitter lock or unlock buttons. To make your selection, press and release the SELECT button until a check-mark appears next to the feature showing the system has been activated or the check-mark is removed showing the system has been deactivated. Refer to "Keyless Enter-N-Go™" in "Things To Know Before Starting Your Vehicle".

Remote Start Comfort Sys.

When this feature is selected and the remote start is activated, the heated steering wheel and driver heated seat features will automatically turn on in cold weather. In warm weather, the driver vented seat feature will automatically turn on when the remote start is activated. These features will stay on through the duration of remote start or until the key is turned to RUN. To make your selection, press and release the SELECT button until a check-mark appears next to the feature showing the system has been activated or the check-mark is removed showing the system has been deactivated.

Key-Off Power Delay

When this feature is selected, the power window switches, radio, hands-free system (if equipped), DVD video system (if equipped), power sunroof (if equipped), and power outlets will remain active for up to 10 minutes after the ignition switch is turned OFF. Opening either front vehicle door will cancel this feature. To make your selection, scroll up or down until the preferred setting is highlighted, then press and release the SELECT button until a check-mark appears next to the setting, showing that the setting has been selected.

Air Suspension Display Alerts – If Equipped

When All is selected, all the Air Suspension Alerts will be displayed. When Warnings Only is selected only the Air Suspension Warnings will be displayed. To make your

selection, scroll up or down until the preferred setting is highlighted, then press and release the SELECT button until a check-mark appears next to the setting, showing that the setting has been selected.

Aero Ride Height Mode (1500 Only) – If Equipped

When this feature is selected the Ride Height will automatically be adjusted depending on the vehicle speed. To make your selection, press and release the SELECT button until a check-mark appears next to the feature showing the system has been activated or the check-mark is removed showing the system has been deactivated.

Tire/Jack Mode – If Equipped

When this feature is selected the air suspension system is disabled to assist with changing a spare tire. To make your selection, press and release the SELECT button until a check-mark appears next to the feature showing the system has been activated or the check-mark is removed showing the system has been deactivated.

Transport Mode – If Equipped

When this feature is selected the air suspension system is disabled to assist with flat bed towing. To make your selection, press and release the SELECT button until a check-mark appears next to the feature showing the system has been activated or the check-mark is removed showing the system has been deactivated.

Wheel Alignment Mode – If Equipped

Before performing a wheel alignment this mode must be enabled. Refer to your authorized dealer for further information.

Horn with Remote Lower – If Equipped

When this feature is selected, a short horn sound will occur when the RKE transmitter REMOTE LOWER button is pressed. To make your selection, press and release the SELECT button until a check-mark appears next to

the feature showing the system has been activated or the check-mark is removed showing the system has been deactivated.

Lights with Remote Lower – If Equipped

When this feature is selected, the front and rear turn signals will flash when the RKE transmitter REMOTE LOWER button is pressed. This feature may be selected with or without the sound horn on lower feature selected. To make your selection, press and release the SELECT button until a check-mark appears next to the feature showing the system has been activated or the check-mark is removed showing the system has been deactivated.

Trailer Select

When this feature is selected, the Trailer Type can be selected between "Trailer 1", "Trailer 2", "Trailer 3" and "Trailer 4". To make your selection, scroll up or down until the preferred setting is highlighted, then press and release the SELECT button until a check-mark appears next to the setting, showing that the setting has been selected.

Trailer Brake Type

When this feature is selected, the Trailer Brake Type can be changed between "Light Electric", "Heavy Electric", "Light EOH" and "Heavy EOH". To make your selection, scroll up or down until the preferred setting is highlighted, then press and release the SELECT button until a check-mark appears next to the setting, showing that the setting has been selected. Refer to "Integrated Trailer Brake Module" in "Starting And Operating."

Trailer Name

When this feature is selected, the Trailer name can be selected from 16 names. To make your selection, scroll up or down until the preferred setting is highlighted, then press and release the SELECT button until a check-mark appears next to the setting, showing that the setting has been selected.

Calibrate Compass

Refer to “Compass Display” for more information.

Compass Variance

Refer to “Compass Display” for more information.

Screen Setup Driver Selectable Items

Odometer

- 000
- 000.0

Upper Left

- None
- Compass
- Outside Temp (default setting)
- Trans Temp
- Oil Temp
- Time
- Range To Empty (RTE)
- Average MPG
- Current MPG
- Trip A
- Trip B
- Trailer Trip (distance only)
- Trailer Brake Gain

Upper Right

- None
- Compass (default setting)
- Outside Temp

- Trans Temp
- Oil Temp
- Time
- Range To Empty (RTE)
- Average MPG
- Current MPG
- Trip A
- Trip B
- Trailer Trip (distance only)
- Trailer Brake Gain

Lower Left

- None (default setting)
- Compass
- Outside Temp
- Trans Temp
- Oil Temp
- Time
- Range
- AVG MPG
- Current MPG
- Trailer Brake Gain

Lower Right

- None (default setting)
- Compass
- Outside Temp
- Trans Temp

- Oil Temp
- Time
- Range
- AVG MPG
- Current MPG
- Trailer Brake Gain

Restore To Defaults (Restores All Settings To Default Settings)

- Cancel
- Okay

Uconnect® SETTINGS

The Uconnect® system uses a combination of soft and hard keys located on the center of the instrument panel that allows you to access and change the customer programmable features.

Hard-Keys

Hard-Keys are located below the Uconnect® system in the center of the instrument panel. In addition, there is a Scroll/Enter control knob located on the right side of the Climate Controls in the center of the instrument panel. Turn the control knob to scroll through menus and change settings (i.e., 30, 60, 90), press the center of the control knob one or more times to select or change a setting (i.e., ON, OFF).

Your Uconnect® system may also have a Screen Off and Back hard-keys located below the system.

Press the Screen Off hard-key to turn off the Uconnect® screen. Press the Screen Off hard-key a second time to turn the screen on.

Press the Back hard-key to exit out of a Menu or certain option on the Uconnect® system.

Soft-Keys

Soft-Keys are accessible on the Uconnect® display.

Customer Programmable Features — Uconnect® 8.4 Settings

Press the Apps soft-key, then press the Settings soft-key to display the menu setting screen. In this mode the Uconnect® system allows you to access programmable features that may be equipped such as Display, Clock, Safety & Driving Assistance, Lights, Doors & Locks, Auto-On Comfort & Remote Start, Engine Off Operation, Compass Settings, Audio, Trailer Brake, Phone/Bluetooth, Suspension, SriusXM Setup and System Information.

NOTE: Only one touchscreen area may be selected at a time.

When making a selection, press the soft-key to enter the desired mode. Once in the desired mode press and release the preferred setting until a check-mark appears next to the setting, showing that setting has been selected. Once the setting is complete either press the Back Arrow soft-key or the Back hard-key to return to the previous menu or press the X soft-key to close out of the settings screen. Pressing the Up or Down Arrow soft-keys on the right side of the screen will allow you to toggle up or down through the available settings.

Display

After pressing the Display soft-key the following settings will be available.

- ***Display Mode***

When in this display you may select one of the auto display settings. To change Mode status, touch and release the Day, Night or Auto soft-key. Then touch the arrow back soft-key.

- ***Display Brightness With Headlights ON***

When in this display, you may select the brightness with the headlights on. Adjust the brightness with the + and – setting soft-keys or by selecting any point on the scale between the + and – soft-keys. Then touch the arrow back soft-key.

- ***Display Brightness With Headlights OFF***

When in this display, you may select the brightness with the headlights off. Adjust the brightness with the + and – setting soft-keys or by selecting any point on the scale between the + and – soft-keys. Then touch the arrow back soft-key.

- ***Set Language***

When in this display, you may select one of three languages for all display nomenclature, including the trip functions and the navigation system (if equipped). Touch the Set Language soft-key and then touch the desired language soft-key until a check-mark appears next to the language, showing that setting has been selected. Touch the back arrow soft-key to return to the previous menu.

- *Units*

When in this display, you may select to have the EVIC, odometer, and navigation system (if equipped) changed between US and Metric units of measure. Touch US or Metric until a check-mark appears next to the setting, showing that setting has been selected. Touch the back arrow soft-key to return to the previous menu.

- *Voice Response Length*

When in this display, you may change the Voice Response Length settings. To change the Voice Response Length, touch the Brief or Detailed soft-key until a check-mark appears next to the setting, showing that setting has been selected. Touch the back arrow soft-key to return to the previous menu.

- *Touchscreen Beep*

When in this display, you may turn on or shut off the sound heard when a touch screen button (soft-key) is pressed. Touch the Touchscreen Beep soft-key until a check-mark appears next to the setting, showing that setting has been selected. Touch the back arrow soft-key to return to the previous menu.

- *Navigation Turn-By-Turn In Cluster — If Equipped*

When this feature is selected, the turn-by-turn directions will appear in the display as the vehicle approaches a designated turn within a programmed route. To make your selection, touch the Navigation Turn-By-Turn In Cluster soft-key, until a check-mark appears next to the setting, showing that setting has been selected. Touch the back arrow soft-key to return to the previous menu.

- *Fuel Saver Display In Cluster*

The "ECO" message is located in the instrument cluster display, this message can be turned on or off. To make your selection, touch the Fuel Saver Display soft-key, until a check-mark appears next to the setting, showing that setting has been selected. Touch the back arrow soft-key to return to the previous menu.

Clock

After pressing the Clock soft-key the following settings will be available.

- *Sync Time With GPS*

When in this display, you may automatically have the radio set the time. To change the Sync Time setting touch the Sync with GPS Time soft-key until a check-mark appears next to the setting, showing that setting has been selected. Touch the back arrow soft-key to return to the previous menu.

- *Set Time Hours*

When in this display, you may adjust the hours. The Sync with GPS Time soft-key must be unchecked. To make your selection touch the + or - soft-keys to adjust the hours up or down. Touch the back arrow soft-key to return to the previous menu or touch the X soft-key to close out of the settings screen.

- *Set Time Minutes*

When in this display, you may adjust the minutes. The Sync with GPS Time soft-key must be unchecked. To make your selection touch the + or - soft-keys to adjust the minutes up or down. Touch the back arrow soft-key to return to the previous menu or touch the X soft-key to close out of the settings screen.

- *Time Format*

When in this display, you may select the time format display setting. Touch the Time Format soft-key until a

check-mark appears next to the 12hrs or 24hrs setting, showing that setting has been selected. Touch the back arrow soft-key to return to the previous menu.

Safety & Driving Assistance

After pressing the Safety & Driving Assistance soft-key the following settings will be available.

- ***Park Assist***

The Rear Park Assist system will scan for objects behind the vehicle when the transmission shift lever is in REVERSE and the vehicle speed is less than 11 mph (18 km/h). The system can be enabled with Sound Only or Sound and Display. To change the Park Assist status, touch and release Sound Only or Sounds and Display button. Then touch the arrow back soft-key. Refer to "ParkSense® Rear Park Assist" in "Understanding The Features Of Your Vehicle" for system function and operating information.

- ***Tilt Mirrors In Reverse***

When this feature is selected, the outside sideview mirrors will tilt downward when the ignition is in the RUN position and the transmission shift lever is in the REVERSE position. The mirrors will move back to their previous position when the transmission is shifted out of REVERSE. To make your selection, touch the Tilt Mirrors In Reverse soft-key, until a check-mark appears next to setting, showing that setting has been selected. Touch the back arrow soft-key to return to the previous menu.

- ***ParkView® Backup Camera***

Your vehicle may be equipped with the ParkView® Rear Back Up Camera that allows you to see an on-screen image of the rear surroundings of your vehicle whenever the shift lever is put into REVERSE. The image will be displayed on the radio touchscreen display along with a caution note to "check entire surroundings" across the top of the screen. After five seconds, this note will

disappear. The ParkView® camera is located on the rear of the vehicle above the rear License plate. To make your selection, touch the ParkView® Backup Camera soft-key, until a check-mark appears next to setting, indicating that the setting had been selected. Touch the back arrow soft-key to return to the previous menu.

- ***ParkView® Camera Delay***

When this feature is enabled, it will allow the ParkView Backup Camera display to remain on while in drive for up to 10 seconds, or 8 mph. To make your selection, touch the ParkView® Backup Camera Delay soft-key, until a check-mark appears next to setting, indicating that the setting had been selected. Touch the back arrow soft-key to return to the previous menu.

- ***ParkView® Backup Camera Static Gridlines***

Your vehicle may be equipped with the ParkView® Rear Back Up Camera Static Guidelines that allows you to see straight grid line overlay over the ParkView Back up camera display whenever the shift lever is put into REVERSE. The image will be displayed on the radio touchscreen display along with a caution note to "check entire surroundings" across the top of the screen. After five seconds, this note will disappear. To make your selection, touch the ParkView® Backup Camera Static Gridlines soft-key, until a check-mark appears next to setting, indicating that the setting had been selected. Touch the back arrow soft-key to return to the previous menu.

- ***ParkView® Backup Camera Fixed Guidelines***

Your vehicle may be equipped with the ParkView® Rear Back Up Camera Fixed Guidelines that allows you to see Fixed Guidelines over the ParkView Back up Camera display whenever the shift lever is put into REVERSE. The image will be displayed on the radio touchscreen

display along with a caution note to “check entire surroundings” across the top of the screen. After five seconds, this note will disappear. To make your selection, touch the ParkView® Backup Camera Fixed Guidelines soft-key, until a check-mark appears next to setting, indicating that the setting had been selected. Touch the back arrow soft-key to return to the previous menu.

- ***ParkView® Backup Camera Active Guidelines***

Your vehicle may be equipped with the ParkView® Rear Back Up Camera Active Guidelines that allows you to see Active (Dynamic) Guidelines which deflect with steering wheel angle over the ParkView Back up Camera display whenever the shift lever is put into REVERSE. The image will be displayed on the radio touchscreen display along with a caution note to “check entire surroundings” across the top of the screen. After five seconds, this note will disappear. To make your selection, touch the ParkView® Backup Camera Active Guidelines soft-key, until a check-mark appears next to setting, indicating that the setting had been selected. Touch the back arrow soft-key to return to the previous menu.

- ***ParkSense® Front Park Assist Chime Volume***

Front Park Assist chime volume settings can be selected from the EVIC or Uconnect® System (if equipped). The chime volume settings include LOW, MEDIUM, and HIGH. The factory default volume setting is MEDIUM.

Refer to “EVIC settings” or “Uconnect® Settings” in “Understanding Your Instrument Panel” for further information.

- ***ParkSense® Rear Park Assist Chime Volume***

Rear Park Assist chime volume settings can be selected from the EVIC or Uconnect® System (if equipped). The chime volume settings include LOW, MEDIUM, and HIGH. The factory default volume setting is MEDIUM.

Refer to "EVIC settings" or "Uconnect® Settings" in "Understanding Your Instrument Panel" for further information.

- ***Rain Sensing Auto Wipers***

When this feature is selected, the system will automatically activate the windshield wipers if it senses moisture on the windshield. To make your selection, touch the Rain Sensing soft-key, until a check-mark appears next to setting, showing that setting has been selected. Touch the back arrow soft-key to return to the previous menu.

- ***Hill Start Assist — If Equipped***

When this feature is selected, the Hill Start Assist (HSA) system is active. Refer to "Electronic Brake Control System" in "Starting And Operating" for system function and operating information. To make your selection, touch the Hill Start Assist soft-key, until a check-mark appears next to setting, showing that setting has been selected. Touch the back arrow soft-key to return to the previous menu.

- ***Four Corner Air Suspension Modes — If Equipped***

There are four air suspension modes designed to protect the system in unique situations. Tire Jack Mode is selected to assist in changing a spare tire. Transport Mode is selected to assist when the vehicle is being flat bed towed. Wheel Alignment Mode is selected before performing a wheel alignment, refer to your authorized dealer for information. Protection Mode will automatically be selected in order to "protect" the air suspension system when the payload has been exceeded or load leveling cannot be achieved.

Lights

After pressing the Lights soft-key the following settings will be available.

- *Headlight Off Delay*

When this feature is selected, the driver can choose to have the headlights remain on for 0, 30, 60, or 90 seconds when exiting the vehicle. To make your selection, scroll up or down until the preferred setting is highlighted, then press and release the SELECT button until a check-mark appears next to the setting, showing that the setting has been selected.

- *Headlight Illumination On Approach*

When this feature is selected, the headlights will activate and remain on for 0, 30, 60, or 90 seconds when the doors are unlocked with the Remote Keyless Entry (RKE) transmitter. To change the Illuminated Approach status, touch the + or - soft-key to select your desired time interval. Touch the back arrow soft-key to return to the previous menu.

- *Headlights With Wipers — If Equipped*

When this feature is selected, and the headlight switch is in the AUTO position, the headlights will turn on approximately 10 seconds after the wipers are turned on. The headlights will also turn off when the wipers are turned off if they were turned on by this feature. To make your selection, touch the Headlights With Wipers soft-key, until a check-mark appears next to setting, showing that setting has been selected. Touch the back arrow soft-key to return to the previous menu.

- *Auto Dim High Beams "SmartBeam™" — If Equipped*

When this feature is selected, the high beam headlights will deactivate automatically under certain conditions. To make your selection, touch the Auto High Beams soft-key, until a check-mark appears next to setting, showing that setting has been selected. Touch the back arrow soft-key to return to the previous menu. Refer to "Lights/

SmartBeam™ — If Equipped" in "Understanding The Features Of Your Vehicle" for further information.

- ***Daytime Running Lights – If Equipped***

When this feature is selected, the headlights will turn on whenever the engine is running. To make your selection, touch the Daytime Running Lights soft-key, until a check-mark appears next to setting, showing that setting has been selected. Touch the back arrow soft-key to return to the previous menu.

- ***Flash Headlights With Lock***

When this feature is selected, the headlights will flash when the doors are locked or unlocked with the Remote Keyless Entry (RKE) transmitter. This feature may be selected with or without the sound horn on lock feature selected. To make your selection, touch the Flash Headlights with Lock soft-key, until a check-mark appears next to setting, showing that setting has been selected. Touch the back arrow soft-key to return to the previous menu.

Doors & Locks

After pressing the Doors & Locks soft-key the following settings will be available.

- ***Auto Lock***

When this feature is selected, all doors will lock automatically when the vehicle reaches a speed of 15 mph (24 km/h). To make your selection, touch the Auto Unlock On Exit soft-key, until a check-mark appears next to setting, showing that setting has been selected. Touch the back arrow soft-key to return to the previous menu.

- ***Auto Unlock On Exit***

When this feature is selected, all doors will unlock when the vehicle is stopped and the transmission is in the PARK or NEUTRAL position and the driver's door is

opened. To make your selection, touch the Auto Unlock On Exit soft-key, until a check-mark appears next to setting, showing that setting has been selected. Touch the back arrow soft-key to return to the previous menu.

- ***Flash Lamps With Lock***

When this feature is selected, the front and rear turn signals will flash when the doors are locked or unlocked with the RKE transmitter. This feature may be selected with or without the sound horn on lock feature selected. To make your selection, press and release the SELECT button until a check-mark appears next to the feature showing the system has been activated or the check-mark is removed showing the system has been deactivated.

- ***Sound Horn With Lock***

When this feature is selected, the horn will sound when the door locks are activated. To make your selection, touch the Sound Horn With Lock soft-key, until a check-mark appears next to setting, showing that setting has been selected. Touch the back arrow soft-key to return to the previous menu.

- ***Sound Horn With Remote Start***

When this feature is selected, the horn will sound when the remote start is activated. To make your selection, touch the Sound Horn With Remote Start soft-key, until a check-mark appears next to setting, showing that setting has been selected. Touch the back arrow soft-key to return to the previous menu.

- ***1st Press Of Key Fob Unlocks***

When 1st Press Of Key Fob Unlocks is selected, only the driver's door will unlock on the first press of the Remote Keyless Entry (RKE) transmitter UNLOCK button. When 1st Press Of Key Fob Unlocks is selected, you must press the RKE transmitter UNLOCK button twice to unlock the

passenger's doors. When Unlock All Doors On 1st Press is selected, all of the doors will unlock on the first press of the RKE transmitter UNLOCK button.

NOTE: If the vehicle is programmed 1st Press Of Key Fob Unlocks, all doors will unlock no matter which Passive Entry equipped door handle is grasped. If 1st Press Of Key Fob Unlocks is programmed, only the driver's door will unlock when the driver's door is grasped. With Passive Entry, if 1st Press Of Key Fob Unlocks is programmed touching the handle more than once will only result in the driver's door opening. If driver door first is selected, once the driver door is opened, the interior door lock/unlock switch can be used to unlock all doors (or use RKE transmitter).

- ***Passive Entry***

This feature allows you to lock and unlock the vehicles door(s) without having to press the Remote Keyless Entry (RKE) transmitter lock or unlock buttons. To make your selection, touch the Passive Entry soft-key, until a check-mark appears next to setting, showing that setting has been selected. Touch the back arrow soft-key to return to the previous menu. Refer to "Keyless Enter-N-Go™" in "Things To Know Before Starting Your Vehicle".

- ***Memory To FOB — If Equipped***

This feature provides automatic driver seat positioning to enhance driver mobility when entering and exiting the vehicle. To make your selection, touch the Memory Linked To FOB soft-key, until a check-mark appears next to setting, showing that setting has been selected. Touch the back arrow soft-key to return to the previous menu.

NOTE: The seat will return to the memorized seat location (if Recall Memory with Remote Key Unlock is set to ON) when the Remote Keyless Entry (RKE) transmitter is used to unlock the door. Refer to "Driver Memory Seat" in "Understanding The Features Of Your Vehicle" for further information.

Auto-On Comfort & Remote Start

After pressing the Auto-On Comfort & Remote Start soft-key the following settings will be available.

- ***Horn With Remote Start***

When this feature is selected, the horn will sound when the remote start is activated. To make your selection, touch the Sound Horn With Remote Start soft-key, until a check-mark appears next to setting, showing that setting has been selected. Touch the back arrow soft-key to return to the previous menu.

- ***Auto-On Driver Heated/Ventilated Seat & Steering Wheel With Vehicle Start — If Equipped***

When this feature is selected the driver's heated seat and heated steering wheel will automatically turn on when temperatures are below 40° F (4.4° C). When temperatures are above 80° F (26.7° C) the driver vented seat will turn on. To make your selection, touch the Auto Heated Seats soft-key, until a check-mark appears next to setting, showing that setting has been selected. Touch the back arrow soft-key to return to the previous menu.

Engine Off Options

After pressing the Engine Off Options soft-key the following settings will be available.

- ***Easy Exit Seats***

When this feature is selected, the Driver's seat will automatically move rearward once the engine is shut off.

To make your selection, touch the Easy Exit Seats soft-key, until a check-mark appears next to setting, showing that setting has been selected. Touch the back arrow soft-key to return to the previous menu.

- *Engine Off Power Delay*

When this feature is selected, the power window switches, radio, Uconnect® phone system (if equipped), DVD video system (if equipped), power sunroof (if equipped), and power outlets will remain active for up to 10 minutes after the ignition is cycled to OFF. Opening either front door will cancel this feature. To change the Engine Off Power Delay status touch the 0 seconds, 45 seconds, 5 minutes or 10 minutes soft-key. Then touch the arrow back soft-key.

- *Headlight Off Delay*

When this feature is selected, the driver can choose to have the headlights remain on for 0, 30, 60, or 90 seconds when exiting the vehicle. To change the Headlight Off Delay status touch the + or - soft-key to select your desired time interval. Touch the back arrow soft-key to return to the previous menu.

Compass Settings – If Equipped

After pressing the Compass Settings soft-key the following settings will be available.

- *Variance*

Compass Variance is the difference between Magnetic North and Geographic North. To compensate for the differences the variance should be set for the zone where the vehicle is driven, per the zone map. Once properly set, the compass will automatically compensate for the differences, and provide the most accurate compass heading.

NOTE: Keep magnetic materials away from the top of the instrument panel, such as iPod's, Mobile Phones, Laptops and Radar Detectors. This is where the compass module is located, and it can cause interference with the compass sensor, and it may give false readings.

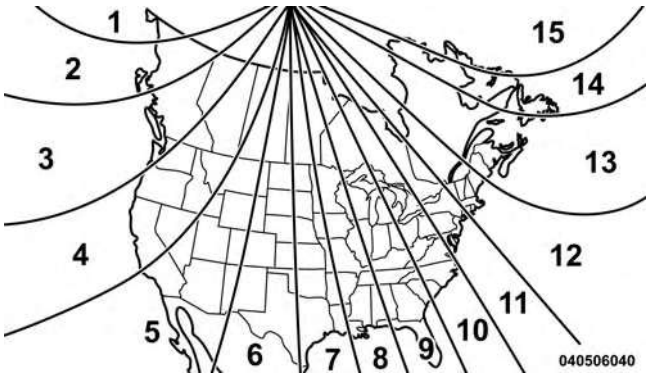

Compass Variance Map

- ***Perform Compass Calibration***

Touch the Calibration soft-key to change this setting. This compass is self-calibrating, which eliminates the need to manually reset the compass. When the vehicle is new, the compass may appear erratic and the EVIC will display CAL until the compass is calibrated. You may also calibrate the compass by pressing the ON soft-key and completing one or more 360-degree turns (in an area free from large metal or metallic objects) until the CAL indicator displayed in the EVIC turns off. The compass will now function normally.

Audio

After pressing the Audio soft-key the following settings will be available.

- ***Balance/Fade***

When in this display you may adjust the Balance and Fade settings.

- *Equalizer*

When in this display you may adjust the Bass, Mid and Treble settings. Adjust the settings with the + and – setting soft-keys or by selecting any point on the scale between the + and – soft-keys. Then touch the arrow back soft-key.

NOTE: Bass/Mid/Treble allow you to simply slide your finger up or down to change the setting as well as touch directly on the desired setting.

- *Speed Adjusted Volume*

This feature increases or decreases volume relative to vehicle speed. To change the Speed Adjusted Volume touch the Off, 1, 2 or 3 soft-key. Then touch the arrow back soft-key.

- *Surround Sound — If Equipped*

This feature provides simulated surround sound mode. To make your selection, touch the Surround Sound soft-key, select On or Off followed by pressing the arrow back soft-key.

- *AUX Volume Match — If Equipped*

This feature provides the ability to tune the audio level for portable devices connected through the AUX input. To make your selection, touch the AUX Volume Match soft-key, select On or Off followed by pressing the arrow back soft-key.

- *Loudness — If Equipped*

The Radio automatically turns on when vehicle is in run or will recall whether it was on or off at last ignition off. To make your selection, touch the Loudness soft-key, select On or Off followed by pressing the arrow back soft-key.

Trailer Brake

- ***Trailer Select***

When this feature is selected, the Trailer Type can be selected between “Trailer 1”, “Trailer 2”, “Trailer 3” and “Trailer 4”. To make your selection, scroll up or down until the preferred setting is highlighted, then press and release the SELECT button until a check-mark appears next to the setting, showing that the setting has been selected.

- ***Trailer Brake Type***

When this feature is selected, the Trailer Brake Type can be changed between “Light Electric”, “Heavy Electric”, “Light EOH” and “Heavy EOH”. To make your selection, scroll up or down until the preferred setting is highlighted, then press and release the SELECT button until a check-mark appears next to the setting, showing that the setting has been selected. Refer to “Integrated Trailer Brake Module” in “Starting And Operating.”

- ***Trailer Name***

When this feature is selected, the Trailer name can be selected from 16 names. To make your selection, scroll up or down until the preferred setting is highlighted, then press and release the SELECT button until a check-mark appears next to the setting, showing that the setting has been selected.

Phone/Bluetooth

After pressing the Phone/Bluetooth soft-key the following settings will be available.

- ***Paired Devices***

This feature shows which phones are paired to the Phone/Bluetooth system. For further information, refer to the Uconnect® User’s Manual.

Air Suspension – If Equipped

After pressing the Suspension soft-key the following settings will be available.

- ***Sound Horn with Remote Lower***

When this feature is selected, a short horn sound will occur when the RKE transmitter REMOTE LOWER button is pressed. Touch the box next to your selection and a check-mark appears next to the feature showing the system has been activated or the check-mark is removed showing the system has been deactivated..

- ***Flash Lights with Remote Lower***

When this feature is selected, the front and rear turn signals will flash when the RKE transmitter REMOTE LOWER button is pressed twice. This feature may be selected with or without the sound horn on lower feature selected. Touch the box next to your selection and a check-mark appears next to the feature showing the system has been activated or the check-mark is removed showing the system has been deactivated.

- ***Suspension Display Messages***

When All is selected, all the Air Suspension Alerts will be displayed. When Warnings Only is selected only the Air Suspension Warnings will be displayed.

- ***Automatic Aero Mode***

When this feature is selected the Ride Height will automatically be adjusted depending on the vehicle speed. Touch the box next to your selection and a check-mark appears next to the feature showing the system has been activated or the check-mark is removed showing the system has been deactivated.

- ***Tire Jack Mode***

When this feature is selected the air suspension system is disabled to assist with changing a spare tire. Touch the box next to your selection and a check-mark appears next

to the feature showing the system has been activated or the check-mark is removed showing the system has been deactivated.

- *Transport Mode*

When this feature is selected the air suspension system is disabled to assist with flat bed towing. Touch the box next to your selection and a check-mark appears next to the feature showing the system has been activated or the check-mark is removed showing the system has been deactivated.

- *Wheel Alignment Mode*

Before performing a wheel alignment this mode must be enabled. Refer to your authorized dealer for further information.

SiriusXM Setup

After pressing the SIRIUS Setup soft-key the following settings will be available.

- *Channel Skip*

SiriusXM can be programmed to designate a group of channels that are the most desirable to listen to or to exclude undesirable channels while scanning. To make your selection, touch the Channel Skip soft-key, select the channels you would like to skip followed by pressing the arrow back soft-key.

- *Subscription Information*

New vehicle purchasers or lessees will receive a free limited time subscription to SiriusXM Satellite Radio with your radio. Following the expiration of the free services, it will be necessary to access the information on the Subscription Information screen in order to re-subscribe.

Touch the Subscription Info soft-key to access the Subscription Information screen.

Write down the SIRIUS ID numbers for your receiver. To reactivate your service, either call the number listed on the screen or visit the provider online.

NOTE: SiriusXM Travel Link is a separate subscription and is available for U.S. residents only.

Uconnect® RADIOS — IF EQUIPPED

For detailed information about your Uconnect® radio refer to your Uconnect® Supplement Manual.

iPod®/USB/MP3 CONTROL — IF EQUIPPED

Located inside the center console upper lid, this feature allows an iPod® or external USB device to be plugged into the USB port.

iPod® control supports Mini, 4G, Photo, Nano, 5G iPod® and iPhone® devices. Some iPod® software versions may not fully support the iPod® control features. Please visit Apple's website for software updates.

For further information, refer to the Uconnect® User's Manual.

STEERING WHEEL AUDIO CONTROLS — IF EQUIPPED

The remote sound system controls are located on the back surface of the steering wheel. Reach behind the wheel to access the switches.

Remote Sound System Controls (Back View Of Steering Wheel)

The right hand control is a rocker type switch with a pushbutton in the center. Pressing the top of the switch will increase the volume, and pressing the bottom of the switch will decrease the volume.

The button located in the center of the right hand control will switch modes to Radio, CD or other valid audio source.

The left hand control is a rocker type switch with a pushbutton in the center. The function of the left hand control is different depending on which mode you are in.

The following describes the left hand control operation in each mode.

Radio Operation

Pressing the top of the switch will SEEK up for the next listenable station and pressing the bottom of the switch will SEEK down for the next listenable station.

The button located in the center of the left hand control will tune to the next pre-set station that you have programmed in the radio pre-set pushbuttons.

CD Player

Pressing the top of the switch once will go to the next track on the CD. Pressing the bottom of the switch once will go to the beginning of the current track or to the beginning of the previous track if it is within one second after the current track begins to play.

If you press the switch up or down twice it plays the second track, three times, it will play the third, etc.

CD/DVD DISC MAINTENANCE

To keep a CD/DVD in good condition, take the following precautions:

1. Handle the disc by its edge; avoid touching the surface.
2. If the disc is stained, clean the surface with a soft cloth, wiping from center to edge.
3. Do not apply paper or tape to the disc; avoid scratching the disc.
4. Do not use solvents such as benzene, thinner, cleaners, or anti-static sprays.
5. Store the disc in its case after playing.
6. Do not expose the disc to direct sunlight.
7. Do not store the disc where temperatures may become too high.

NOTE: If you experience difficulty in playing a particular disc, it may be damaged (i.e., scratched, reflective coating removed, a hair, moisture or dew on the disc) oversized, or have protection encoding. Try a known good disc before considering disc player service.

RADIO OPERATION AND MOBILE PHONES

Under certain conditions, the mobile phone being on in your vehicle can cause erratic or noisy performance from your radio. This condition may be lessened or eliminated by relocating the mobile phone antenna. This condition is not harmful to the radio. If your radio performance does not satisfactorily "clear" by the repositioning of the antenna, it is recommended that the radio volume be turned down or off during mobile phone operation when not using Uconnect® (if equipped).

CLIMATE CONTROLS

The Climate Control System allows you to regulate the temperature, amount, and direction of air circulating throughout the vehicle. The controls are located on the instrument panel below the radio.

Manual Climate Controls Without Touch-Screen — If Equipped

The controls for the manual heating and air conditioning system in this vehicle consist of a series of outer rotary dials and inner push knobs. These comfort controls can be set to obtain desired interior conditions.

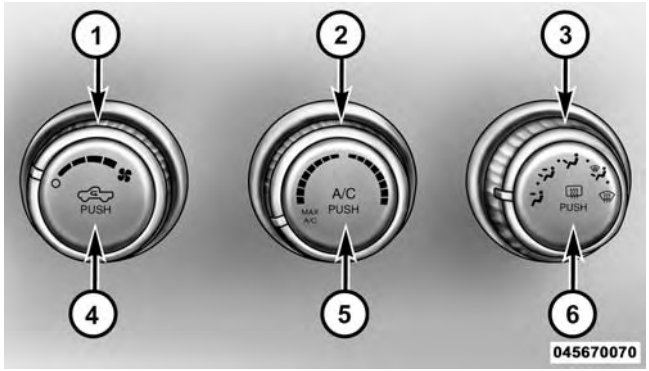

1 – Front Blower
2 – Temperature Control
3 – MODE Control
4 – RECIRCULATION Control
5 – Air Conditioning (A/C)
6 – DEFROST Mode

Front Blower Control

There are four blower speeds. Use this control to regulate the amount of air forced through the system in any mode you select. The blower speed increases as you move the control clockwise from the OFF position.

NOTE: For vehicles equipped with Remote Start, the climate controls will not function during Remote Start operation if the blower control is left in the OFF position.

Temperature Control

045671420

Use this control to regulate the temperature of the air inside the passenger compartment. Rotating the knob counterclockwise, from top center into the blue area of the scale, indicates cooler temperatures. Rotating the knob clockwise, into the red area, indicates warmer temperatures.

Air Conditioning Operation

045671422

Push the A/C button to engage the Air Conditioning (A/C). A LED will illuminate when the A/C system is engaged.

MAX A/C

For maximum cooling, when MAX A/C is selected the A/C is turned on automatically and the air is recirculated.

NOTE: A/C cannot be deselected when in MAX A/C position. The LED will blink three times if the A/C button is pushed. If your air conditioning performance seems lower than expected, check the front of the A/C condenser (located in front of the radiator), for an accumulation of dirt or insects. Clean with a gentle water spray from behind the radiator and through the condenser. Fabric front fascia protectors may reduce airflow to the condenser, reducing air conditioning performance.

Mode Control (Air Direction)

045671421

Mode control allows you to choose from several patterns of air distribution. You can select either a primary mode, as identified by the symbols, or a blend of two of these modes. The closer the control is to a particular mode, the more air distribution you receive from that mode.

Panel Mode

Air is directed through the outlets in the instrument panel. These outlets can be adjusted to direct airflow.

Bi-Level Mode

Air is directed through the panel and floor outlets.

NOTE: There is a difference in temperature (in any conditions other than full cold or full hot), between the upper and lower outlets for added comfort. The warmer air goes to the floor outlets. This feature gives improved comfort during sunny but cool conditions.

Floor Mode

Air is directed through the floor outlets with a small amount through the defrost and side window demist outlets.

Mix Mode

Air is directed through the floor, defrost and side window demist outlets. This setting works best in cold or snowy conditions that require extra heat at the windshield. This setting is good for maintaining comfort, while reducing moisture on the windshield.

Defrost Mode

Air is directed through the windshield and side window demist outlets. Use the DEFROST mode with maximum blower and warm temperature settings for best windshield and side window defrosting.

NOTE: The air conditioning compressor operates in MIX and DEFROST, or a blend of these modes even if the A/C button is not pressed. This dehumidifies the air to help dry the windshield. To improve fuel economy, use these modes only when necessary.

Recirculation Control

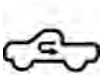

Press this button to choose between outside air intake or recirculation of the air inside the vehicle. A LED will illuminate when you are in Recirculation mode. Only use the Recirculation mode to temporarily block out any outside odors, smoke, or dust, and to cool the interior rapidly upon initial start-up in very hot or humid weather.

NOTE:

- If the RECIRCULATION button is pressed when the system is in Defrost mode the Recirculation LED indicator will flash three times and then turn off to indicate Recirculation mode is not allowed.
- Continuous use of the Recirculation mode may make the inside air stuffy and window fogging may occur. Extended use of this mode is not recommended.

- In cold or damp weather, the use of the Recirculation mode will cause windows to fog on the inside because of moisture buildup inside the vehicle. For maximum defogging, select the outside air position.
- The A/C can be deselected manually without disturbing the mode control selection by pressing the A/C button.

Air Outlets

The airflow from each of the instrument panel outlets can be adjusted for direction, and turned on or off to control airflow.

NOTE: For maximum airflow to the rear, the center instrument panel outlets can be directed toward the rear seat passengers.

Economy Mode

If ECONOMY mode is desired, press the A/C button to turn off the LED indicator and the A/C compressor. Rotate the temperature control knob to the desired temperature. Also, make sure to select only Panel, Bi-Level or Floor modes.

Stop/Start System – If Equipped

While in an Autostop, the Climate Controls system may automatically adjust airflow to maintain cabin comfort. Customer settings will be maintained upon return to an engine running condition.

Manual Climate Controls With Touch-Screen — If Equipped

Hard-Keys

The hard-keys are located below the radio touch-screen.

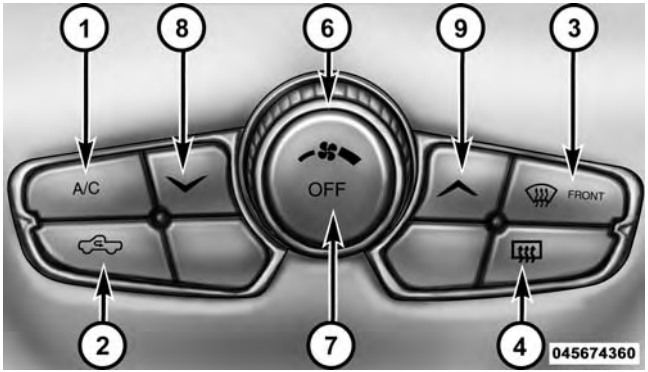

Climate Controls — Hard-keys

Soft-Keys

Soft-keys are accessible on the radio touch-screen.

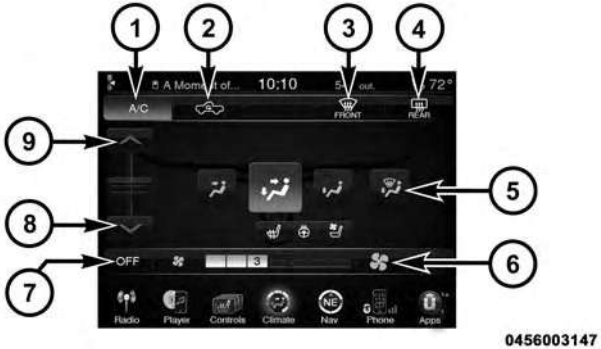

Temperature Controls — Soft-keys

Button Descriptions (Applies To Both Hard-keys And Soft-keys)

1. A/C Button

Press and release to change the current setting, the indicator illuminates when A/C is ON. Performing this function again will cause the A/C operation to switch into manual mode and the A/C indicator will turn off.

2. Recirculation Button

Press and release to change the current setting, the indicator illuminates when ON.

3. Front Defrost Button

Press and release to change the current airflow setting to Defrost mode. The indicator illuminates when this feature is ON. Performing this function will cause the ATC to switch into manual mode. The blower speed may increase when Defrost mode is selected. If the front defrost mode is turned off the climate system will return the previous setting.

4. Defrost Button

Press and release this button to turn on the rear window defroster (if equipped) and the heated outside mirrors (if equipped). An indicator will illuminate when the rear window defroster is on. The rear window defroster automatically turns off after 10 minutes.

CAUTION!

Failure to follow these cautions can cause damage to the heating elements:

- **Use care when washing the inside of the rear window. Do not use abrasive window cleaners on the interior surface of the window. Use a soft cloth and a mild washing solution, wiping parallel to the heating elements. Labels can be peeled off after soaking with warm water.**
- **Do not use scrapers, sharp instruments, or abrasive window cleaners on the interior surface of the window.**
- **Keep all objects a safe distance from the window.**

5. Modes

The airflow distribution mode can be adjusted so air comes from the instrument panel outlets, floor outlets, demister outlets and defrost outlets. The Mode settings are as follows:

- *Panel Mode*

Air comes from the outlets in the instrument panel. Each of these outlets can be individually adjusted to direct the flow of air. The air vanes of the center outlets and outboard outlets can be moved up and down or side to side to regulate airflow direction. There is a shut off wheel located below the air vanes to shut off or adjust the amount of airflow from these outlets.

- *Bi-Level Mode*

Air comes from the instrument panel outlets and floor outlets. A slight amount of air is directed through the defrost and side window demister outlets.

NOTE: BI-LEVEL mode is designed under comfort conditions to provide cooler air out of the panel outlets and warmer air from the floor outlets.

- *Floor Mode*

Air comes from the floor outlets. A slight amount of air is directed through the defrost and side window demister outlets.

- *Mix Mode*

Air comes from the floor, defrost and side window demister outlets. This mode works best in cold or snowy conditions.

NOTE: The air conditioning compressor operates in MIX and DEFROST modes even if the A/C button is not pressed. This dehumidifies the air to help dry the windshield. To improve fuel economy, utilize these modes only when required.

6. Blower Control

Blower control is used to regulate the amount of air forced through the climate system. There are seven blower speeds available. Adjusting the blower will cause automatic mode to switch to manual operation. The speeds can be selected using either hard-keys or soft-keys as follows:

Hard-key

The blower speed increases as you turn the control clockwise from the lowest blower setting. The blower speed decreases as you turn the knob counter-clockwise.

Soft-key

Use the small blower icon to reduce the blower setting and the large blower icon to increase the blower setting. Blower can also be selected by pressing the blower bar area between the icons.

7. Climate Control OFF Button

Press and release this button to turn the Climate Control ON/OFF.

8. Temperature Control Down Button

Push the button for cooler temperature settings. On the touch-screen, slide the temperature bar towards the blue arrow soft-key for cooler temperature settings.

9. Temperature Control Up Button

Push the button for warmer temperature settings. On the touch-screen, slide the temperature bar towards the blue arrow soft-key for cooler temperature settings.

Recirculation Control

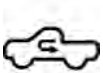

When outside air contains smoke, odors, or high humidity, or if rapid cooling is desired, you may wish to recirculate interior air by pressing the RECIRCULATION control button. Recirculation mode should only be used temporarily. The recirculation LED will illuminate on the blower control knob when this button is selected. Push the button a second time to turn off the Recirculation mode LED and allow outside air into the vehicle.

NOTE: In cold weather, use of Recirculation mode may lead to excessive window fogging. The Recirculation mode is not allowed in Defrost mode to improve window clearing operation. Recirculation will be disabled automatically if these modes are selected.

General Overview

Hard-Keys

The hard-keys located below the Uconnect® screen.

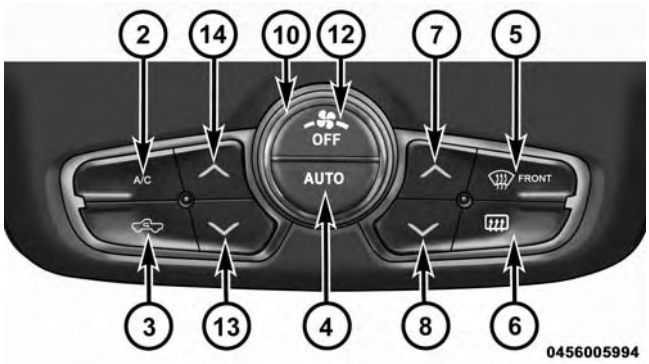

Automatic Climate Controls — Hard-keys

Soft-Keys

Soft-keys are accessible on the Uconnect® system screen.

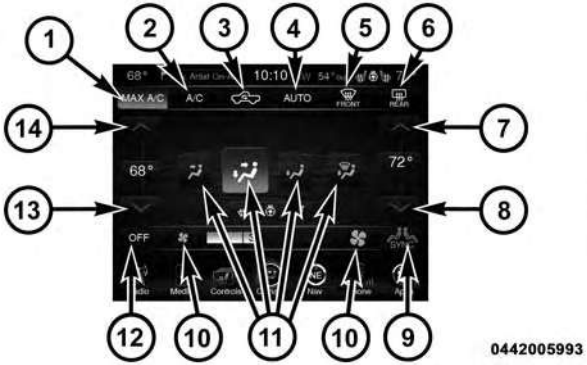

Uconnect® 8.4 Automatic Temperature Controls — Soft-keys

Button Descriptions (Applies To Both Hard-keys And Soft-keys)

1. MAX A/C Button

Press and release to change the current setting, the indicator illuminates when MAX A/C is ON. Performing this function again will cause the MAX A/C operation to switch into manual mode and the MAX A/C indicator will turn off.

2. A/C Button

Press and release to change the current setting, the indicator illuminates when A/C is ON. Performing this function again will cause the A/C operation to switch into manual mode and the A/C indicator will turn off.

3. Recirculation Button

Press and release to change the current setting, the indicator illuminates when ON.

4. AUTO Operation Button

Automatically controls the interior cabin temperature by adjusting airflow distribution and amount. Performing this function will cause the ATC to switch between manual mode and automatic modes. Refer to "Automatic Operation" for more information.

5. Front Defrost Button

Press and release to change the current airflow setting to Defrost mode. The indicator illuminates when this feature is ON. Performing this function will cause the ATC to switch into manual mode. The blower speed may increase when Defrost mode is selected. If the front defrost mode is turned off the climate system will return the previous setting.

6. Rear Defrost Button

Press and release this button to turn on the rear window defroster and the heated outside mirrors (if equipped). An indicator will illuminate when the rear window defroster is on. The rear window defroster automatically turns off after 10 minutes.

CAUTION!

Failure to follow these cautions can cause damage to the heating elements:

- **Use care when washing the inside of the rear window. Do not use abrasive window cleaners on the interior surface of the window. Use a soft cloth and a mild washing solution, wiping parallel to the heating elements. Labels can be peeled off after soaking with warm water.**

(Continued)

CAUTION! *(Continued)*

- **Do not use scrapers, sharp instruments, or abrasive window cleaners on the interior surface of the window.**
- **Keep all objects a safe distance from the window.**

7. Passenger Temperature Control Up Button

Provides the passenger with independent temperature control. Push the hard-key button for warmer temperature settings or on the touch-screen, press and slide the soft-key temperature bar towards the red arrow soft-key for warmer temperature settings.

NOTE: Pressing this button while in Sync mode will automatically exit Sync.

8. Passenger Temperature Control Down Button

Provides the passenger with independent temperature control. Push the hard-key button for cooler temperature settings or on the touch-screen, press and slide the soft-key temperature bar towards the blue arrow soft-key for cooler temperature settings.

NOTE: Pressing this button while in Sync mode will automatically exit Sync.

9. SYNC

Press the Sync soft-key to toggle the Sync feature On/Off. The Sync indicator is illuminated when this feature is enabled. Sync is used to synchronize the passenger temperature setting with the driver temperature setting. Changing the passenger temperature setting while in Sync will automatically exit this feature.

10. Blower Control

Blower control is used to regulate the amount of air forced through the climate system. There are seven blower speeds available. Adjusting the blower will cause automatic mode to switch to manual operation. The speeds can be selected using either hard-keys or soft-keys as follows:

Hard-key

The blower speed increases as you turn the control clockwise from the lowest blower setting. The blower speed decreases as you turn the knob counter-clockwise.

Soft-key

Use the small blower icon to reduce the blower setting and the large blower icon to increase the blower setting. Blower can also be selected by pressing the blower bar area between the icons.

11. Modes

The airflow distribution mode can be adjusted so air comes from the instrument panel outlets, floor outlets, demist outlets and defrost outlets. The Mode settings are as follows:

Panel Mode

Air comes from the outlets in the instrument panel. Each of these outlets can be individually adjusted to direct the flow of air. The air vanes of the center outlets and outboard outlets can be moved up and down or side to side to regulate airflow direction. There is a shut off wheel located below the air vanes to shut off or adjust the amount of airflow from these outlets.

Bi-Level Mode

Air comes from the instrument panel outlets and floor outlets. A slight amount of air is directed through the defrost and side window demister outlets.

NOTE: BI-LEVEL mode is designed under comfort conditions to provide cooler air out of the panel outlets and warmer air from the floor outlets.

Floor Mode

Air comes from the floor outlets. A slight amount of air is directed through the defrost and side window demister outlets.

Mix Mode

Air comes from the floor, defrost and side window demist outlets. This mode works best in cold or snowy conditions.

Defrost Mode

Air comes from the windshield and side window demist outlets. Use Defrost mode with maximum temperature settings for best windshield and side window defrosting and defogging. When the defrost mode is selected, the blower level may will increase.

12. Climate Control OFF Button

Press and release this button to turn the Climate Control ON/OFF.

13. Driver Temperature Control Down Button

Provides the driver with independent temperature control. Push the hard-key button for cooler temperature settings or on the touch-screen, press and slide the soft-key temperature bar towards the blue arrow soft-key for cooler temperature settings.

NOTE: In Sync mode, this button will also automatically adjust the passenger temperature setting at the same time.

14. Driver Temperature Control Up Button

Provides the driver with independent temperature control. Push the hard-key button for warmer temperature settings or on the touch-screen, press and slide the soft-key temperature bar towards the red arrow soft-key for warmer temperature settings.

NOTE: In Sync mode, this button will also automatically adjust the passenger temperature setting at the same time.

15. Temperature

Press the temperature soft-key to regulate the temperature of the air inside the passenger compartment. Moving the temperature bar into the red area, indicates warmer temperatures. Moving the temperature bar into the blue area indicates cooler temperatures.

Automatic Operation

1. Press the AUTO hard-key or soft-key button on the Automatic Temperature Control (ATC) Panel.
2. Next, adjust the temperature you would like the system to maintain by adjusting the driver and passenger temperature hard or soft control buttons. Once the desired temperature is displayed, the system will achieve and automatically maintain that comfort level.
3. When the system is set up for your comfort level, it is not necessary to change the settings. You will experience the greatest efficiency by simply allowing the system to function automatically.

NOTE:

- It is not necessary to move the temperature settings for cold or hot vehicles. The system automatically adjusts the temperature, mode, and blower speed to provide comfort as quickly as possible.
- The temperature can be displayed in U.S. or Metric units by selecting the US/M customer-programmable feature. Refer to the "Uconnect® System Settings" in this section of the manual.

To provide you with maximum comfort in the Automatic mode, during cold start-ups the blower fan will remain on low until the engine warms up. The blower will increase in speed and transition into Auto mode.

Recirculation Control

When outside air contains smoke, odors, or high humidity, or if rapid cooling is desired, you may wish to recirculate interior air by pressing the RECIRCULATION control button. Recirculation mode should only be used temporarily. The recirculation LED will illuminate on the soft and hard keys when either button is selected. Push either soft or hard key a second time to turn off the Recirculation mode LED and allow outside air into the vehicle.

NOTE: In cold weather, use of Recirculation mode may lead to excessive window fogging. The recirculation feature may be unavailable (soft-key button greyed out) if conditions exist that could create fogging on the inside of the windshield. On systems with Manual Climate Controls, the recirculation mode is not allowed in Defrost mode to improve window clearing operation. Recirculation will be disabled automatically if this mode is selected. Attempting to use Recirculation while in this mode will cause the LED in the control button to blink and then turn off.

Summer Operation

The engine cooling system must be protected with a high-quality antifreeze coolant to provide proper corrosion protection and to protect against engine overheating. A solution of 50% ethylene glycol antifreeze coolant and 50% water is recommended. Refer to “Maintenance Procedures” in “Maintaining Your Vehicle” for proper coolant selection.

Winter Operation

To ensure the best possible heater and defroster performance, make sure the engine cooling system is functioning properly and the proper amount, type, and concentration of coolant is used. Refer to “Maintenance Procedures” in “Maintaining Your Vehicle” for proper coolant selection. Use of the air Recirculation mode during Winter months is not recommended because it may cause window fogging.

Vacation/Storage

Any time you store your vehicle or keep it out of service (i.e., vacation) for two weeks or more, run the air conditioning system at idle for about five minutes in fresh air with the blower setting in high. This will ensure adequate system lubrication to minimize the possibility of compressor damage when the system is started again.

Window Fogging and Frosting

Vehicle windows tend to fog on the inside of the glass in mild, rainy and/or humid weather. Windows may frost on the inside of the glass in very cold weather. To clear the windows, select Defrost or Mix mode and increase the front blower speed. Do not use the Recirculation mode without A/C for long periods, as fogging may occur.

NOTE: Automatic Temperature Controls (ATC) will automatically adjust the climate control settings to reduce or eliminate window fogging on the front windshield. When this occurs, recirculation will be unavailable.

Outside Air Intake

Make sure the air intake, located directly in front of the windshield, is free of obstructions such as leaves. Leaves collected in the air intake may reduce airflow, can cause odor, and if they enter the plenum they could plug the water drains. In Winter months make sure the air intake is clear of ice, slush and snow.

Operating Tips Chart

WEATHER	CONTROL SETTINGS
Hot weather and vehicle interior is very hot	Set the mode control to , on, and blower on high. Roll down the windows for a minute to flush out the hot air. Once comfort is achieved adjust controls for comfort.
Warm weather	Turn on and set the mode control to the position.
Cool Sunny	Operate in position.
Cool & Humid conditions	Set the mode control to and turn on to keep windows clear.
Cold Weather	Set the mode control to the position. If windshield fogging starts to occur, move the control towards the position.

8000cb71

STARTING AND OPERATING

CONTENTS

■ STARTING PROCEDURES 366

- □ Normal Starting. 366
- □ Automatic Transmission 366
- □ Keyless Enter-N-Go™ 367
- □ Normal Starting. 367
- □ Extreme Cold Weather (Below –20°F Or –29°C) 369
- □ If Engine Fails To Start 369
- □ After Starting 370

■ STOP/START SYSTEM — IF EQUIPPED 370

- □ Automatic Mode 370
- □ Possible Reasons The Engine Does Not AUTO STOP 371
- □ To Start The Engine While In Autostop Mode 372
- □ To Manually Turn Off The Stop Start System 373
- □ To Manually Turn On The Stop Start System 375
- □ System Malfunction 375

■ ENGINE BLOCK HEATER — IF EQUIPPED . . .375

■ AUTOMATIC TRANSMISSION 376

□ Key Ignition Park Interlock. 378

□ Brake/Transmission Shift Interlock System . . .379

□ Eight-Speed Automatic Transmission – If Equipped 379

□ Six-Speed Automatic Transmission — 1500 Models Only 389

□ Six-Speed Automatic Transmission — 2500/3500 Models Only 401

■ FOUR-WHEEL DRIVE OPERATION — IF EQUIPPED 412

□ Manually Shifted Transfer Case – If Equipped. 412

□ Electronically Shifted Transfer Case (Four-Position Switch) – If Equipped 416

□ Electronically Shifted Transfer Case (Five-Position Switch) – If Equipped 423

□ Electronically Shifted Transfer Case (Five-Position Switch) – If Equipped 428

■ AIR SUSPENSION SYSTEM (1500 MODELS ONLY) — IF EQUIPPED 436

□ Description 436

□ Air Suspension Modes 440

□ Electronic Vehicle Information Center (EVIC) Display Messages 441

□ Operation 442

■ AIR SUSPENSION SYSTEM (2500/3500 MODELS ONLY) — IF EQUIPPED. 443

□ Description 443

□ Air Suspension Modes 445

- Electronic Vehicle Information Center (EVIC) Display Messages 446
- Operation 446

■ AXLE LOCKER SYSTEM (POWER WAGON MODELS ONLY) — IF EQUIPPED. 447

■ STABILIZER/SWAY BAR SYSTEM — POWER WAGON ONLY 450

■ SAFE OFF-ROAD DRIVING — POWER WAGON ONLY 452

- Off-Road Driving Tips And Vehicle Characteristics 452
- Driving In Snow, Mud And Sand 455
- Crossing Obstacles (Rocks And Other High Points) 456
- Hill Climbing 459
- Driving Through Water 461
- Airing Down For Off-Road Driving. 464
- Vehicle Recovery 465
- After Driving Off-Road 469

■ LIMITED-SLIP DIFFERENTIAL 470

■ DRIVING ON SLIPPERY SURFACES 471

- Acceleration 471
- Traction 471

■ DRIVING THROUGH WATER 472

- Flowing/Rising Water 472
- Shallow Standing Water 472

■ OFF-ROAD DRIVING TIPS 474

- After Driving Off-Road 474

■ WINCH USAGE (POWER WAGON ONLY) — IF EQUIPPED 476
- □ Things To Know Before Using Your Winch. . . .476
- □ Understanding The Features Of Your Winch. . .478
- □ Winch Accessories 480
- □ Operating Your Winch 482
- □ Rigging Techniques 494

■ POWER STEERING — 1500 Models 496

■ POWER STEERING — 2500/3500 Models 498
- □ Power Steering Fluid Check– 2500/3500 Models 499

■ FUEL SAVER TECHNOLOGY 5.7L/6.4L ENGINES ONLY – IF EQUIPPED. 500

■ PARKING BRAKE 500

■ BRAKE SYSTEM 502
- □ Four-Wheel Anti-Lock Brake System 503
- □ Hydraulic Brake Assist – 2500/3500 Models Only – Except Power Wagon. 504

■ ELECTRONIC BRAKE CONTROL SYSTEM 505
- □ Anti-Lock Brake System (ABS) 505
- □ Traction Control System (TCS) – If Equipped . . .506
- □ Brake Assist System (BAS) – If Equipped 506
- □ Hill Start Assist (HSA) – If Equipped. 507
- □ Hill Descent Control (HDC) – If Equipped (Power Wagon Only) 511
- □ Electronic Stability Control (ESC) – If Equipped 514

- ESC Activation/Malfunction Indicator Light And ESC OFF Indicator Light 519
- Trailer Sway Control (TSC) – If Equipped 520

■ TIRE SAFETY INFORMATION 521
- Tire Markings 521
- Tire Identification Number (TIN). 525
- Tire Terminology And Definitions 527
- Tire Loading And Tire Pressure 528

■ TIRES — GENERAL INFORMATION 533
- Tire Pressure 533
- Tire Inflation Pressures 534
- Tire Pressures For High Speed Operation 536
- Radial Ply Tires 536
- Tire Types 537
- Run Flat Tires – If Equipped 538
- Spare Tires – If Equipped 539
- Tire Spinning 541
- Tread Wear Indicators 542
- Life Of Tire 542
- Replacement Tires 543

■ SUPPLEMENTAL TIRE PRESSURE INFORMATION — IF EQUIPPED 544

■ TIRE CHAINS (TRACTION DEVICES) 545

■ TIRE ROTATION RECOMMENDATIONS 547
- Directional Tires – If Equipped 548
- Dual Rear Wheels – If Equipped 548

■ TIRE PRESSURE MONITOR SYSTEM (TPMS) . . .549
□ Base System 552
□ Premium System – If Equipped. 554
□ Tire Pressure Information System (TPIS) 3500 Series Trucks 558
□ General Information 559
■ FUEL REQUIREMENTS 560
□ 3.6L/6.4L Engine 560
□ 5.7L Engines 560
□ Reformulated Gasoline 561
□ Gasoline/Oxygenate Blends 561
□ E-85 Usage In Non-Flex Fuel Vehicles 561
□ MMT In Gasoline 562
□ Materials Added To Fuel 562
□ Fuel System Cautions. 563
□ Carbon Monoxide Warnings 564
■ ADDING FUEL 564
□ Loose Fuel Filler Cap Message 567
■ VEHICLE LOADING 567
□ Certification Label 567
■ TRAILER TOWING 569
□ Common Towing Definitions 570
□ Trailer Hitch Type and Maximum Trailer Weight 575
□ Trailer Towing Weights (Maximum Trailer Weight Ratings) 576
□ Trailer And Tongue Weight 578

□ Towing Requirements 580
□ Towing Tips 590
■ SNOWPLOW 591
□ 1500 Models Only 591
□ 2500/3500 Models Only 592
■ RECREATIONAL TOWING (BEHIND MOTORHOME, ETC.) 596
□ Towing This Vehicle Behind Another Vehicle . . .596
□ Recreational Towing – Two-Wheel Drive Models 597
□ Recreational Towing – Four-Wheel Drive Models 598

STARTING PROCEDURES

Before starting your vehicle, adjust your seat, adjust both inside and outside mirrors, and fasten your seat belt.

The starter should not be operated for more than 15-second intervals. Waiting a few seconds between such intervals will protect the starter from overheating.

WARNING!

Never leave children alone in a vehicle, or with access to an unlocked vehicle. Leaving children in a vehicle unattended is dangerous for a number of reasons. A child or others could be seriously or fatally injured. Children should be warned not to touch the parking brake, brake pedal or the shift lever. Do not leave the key fob in or near the vehicle, or in a location accessible to children. A child could operate power windows, other controls, or move the vehicle.

Normal Starting

Normal starting of either a warm or cold engine is obtained without pumping or pressing the accelerator pedal. Turn the key fob to the START position and release when the engine starts. If the engine fails to start within 10 seconds, turn the key fob to the OFF position, wait five seconds, then repeat the “Normal Starting” procedure.

Automatic Transmission

Start the engine with the shift lever in the NEUTRAL or PARK position. Apply the brake before shifting into any driving range.

NOTE: This vehicle is equipped with a transmission shift interlocking system. The brake pedal must be pressed to shift out of PARK.

Tip Start Feature

Do not press the accelerator. Turn the ignition switch briefly to the START position and release it. The starter motor will continue to run but will automatically disengage when the engine is running.

Keyless Enter-N-Go™

This feature allows the driver to operate the ignition switch with the push of a button, as long as the Remote Start/Keyless Enter-N-Go™ Key Fob is in the passenger compartment.

Normal Starting

Using The ENGINE START/STOP Button

1. The transmission must be in PARK or NEUTRAL.
2. Press and hold the brake pedal while pressing the ENGINE START/STOP button once.
3. The system takes over and attempts to start the vehicle. If the vehicle fails to start, the starter will disengage automatically after 10 seconds.
4. If you wish to stop the cranking of the engine prior to the engine starting, press the button again.

NOTE: Normal starting of either a cold or a warm engine is obtained without pumping or pressing the accelerator pedal.

To Turn Off The Engine Using ENGINE START/STOP Button

1. Place the shift lever/shift selector in PARK, then press and release the ENGINE START/STOP button.
2. The ignition switch will return to the OFF position.
3. If the shift lever/shift selector is not in PARK, the ENGINE START/STOP button must be held for two seconds and vehicle speed must be above 5 mph (8 km/h) before the engine will shut off. The ignition switch position will remain in the ACC position until the shift lever/shift selector is in PARK and the button is pressed twice to the OFF position. If the shift lever/shift selector is not in PARK and the ENGINE START/STOP button is pressed once, the EVIC (if equipped) will display a "Vehicle Not In Park" message and the engine will remain running. Never leave a vehicle out of the PARK position, or it could roll.

NOTE: If the ignition switch is left in the ACC or RUN (engine not running) position and the transmission is in PARK, the system will automatically time out after 30 minutes of inactivity and the ignition will switch to the OFF position.

ENGINE START/STOP Button Functions – With Driver's Foot OFF The Brake Pedal (In PARK Or NEUTRAL Position)

The ENGINE START/STOP button operates similar to an ignition switch. It has four positions, OFF, ACC, RUN and START. To change the ignition switch positions without starting the vehicle and use the accessories follow these steps.

1. Starting with the ignition switch in the OFF position:
2. Press the ENGINE START/STOP button once to change the ignition switch to the ACC position (EVIC displays "ACC"),

3. Press the ENGINE START/STOP button a second time to change the ignition switch to the RUN position (EVIC displays “RUN”),
4. Press the ENGINE START/STOP button a third time to return the ignition switch to the OFF position (EVIC displays “OFF”).

Extreme Cold Weather (Below –20°F Or –29°C)

To ensure reliable starting at these temperatures, use of an externally powered electric engine block heater (available from your authorized dealer) is recommended.

If Engine Fails To Start

If the engine fails to start after you have followed the “Normal Starting” procedure, it may be flooded. Push the accelerator pedal all the way to the floor and hold it there while cranking the engine. This should clear any excess fuel in case the engine is flooded.

CAUTION!

To prevent damage to the starter, do not crank the engine for more than 15 seconds at a time. Wait 10 to 15 seconds before trying again.

WARNING!

- **Never pour fuel or other flammable liquids into the throttle body air inlet opening in an attempt to start the vehicle. This could result in a flash fire causing serious personal injury.**
- **Do not attempt to push or tow your vehicle to get it started. Vehicles equipped with an automatic transmission cannot be started this way. Unburned fuel could enter the catalytic converter and once the engine has started, ignite and damage the converter and vehicle.**

(Continued)

WARNING! *(Continued)*

- **If the vehicle has a discharged battery, booster cables may be used to obtain a start from a booster battery or the battery in another vehicle. This type of start can be dangerous if done improperly. Refer to "Jump Starting" in "What To Do In Emergencies" for further information.**

If the engine has been flooded, it may start to run, but not have enough power to continue running when the ignition button/key is released. If this occurs, continue cranking with the accelerator pedal pushed all the way to the floor. Release the accelerator pedal and the ignition button/key once the engine is running smoothly.

If the engine shows no sign of starting after two 15-second periods of cranking with the accelerator pedal held to the floor, the "Normal Starting" procedure should be repeated.

After Starting

The idle speed is controlled automatically and it will decrease as the engine warms up.

STOP/START SYSTEM — IF EQUIPPED

The Stop/Start function is developed to save fuel and reduce emissions. The system will stop the engine automatically during a vehicle stop if the required conditions are met. Releasing the brake pedal will automatically re-start the vehicle.

Automatic Mode

The Stop/Start feature is enabled after every normal customer engine start. It will remain in STOP/START NOT READY until you drive forward with a vehicle speed greater than 5 mph (8 km/h). At that time, the system will go into STOP/START READY and if all other conditions are met, can go into an STOP/START AUTO STOP ACTIVE "Autostop" mode.

To Activate The Autostop Mode, The Following Must Occur:

1. The system must be in STOP/START READY state. A STOP/START READY message will be displayed in the Electronic Vehicle Information Center (EVIC) within the Stop/Start section. Refer to "Electronic Vehicle Information Center (EVIC)" in "Understanding Your Instrument Panel" for further information.
2. The vehicle must be completely stopped.
3. The transmission Gear Selector must be in Drive and the brake pedal depressed.

The engine will shut down, the tachometer will move to the zero position and the stop/start telltale will illuminate indicating you are in an Autostop. While in an Autostop, the Climate Controls system may automatically adjust airflow to maintain cabin comfort. Customer settings will be maintained upon return to an engine running condition.

Possible Reasons The Engine Does Not AUTO STOP

Prior to engine shut down, the system will check many safety and comfort conditions to see if they are fulfilled. In following situations the engine will not stop:

- Driver's seat belt is not buckled
- Driver's door is not closed
- Outside temperature is less than 1°F (–17°C) or greater than 104°F (40°C)
- Battery temperature too warm or cold
- The vehicle is on a steep grade

- Cabin heating or cooling is in process and an acceptable cabin temperature has not been achieved
- HVAC is set to full defrost mode at a high blower speed
- Engine has not reached normal operating temperature
- Battery discharged
- The transmission is not in DRIVE
- Hood is open
- Vehicle is in 4LO transfer case mode

Other factors which can inhibit AutoStop include: fuel level, accelerator pedal input, engine temp too high and steering angle.

It may be possible for the vehicle to be driven several times without the STOP/START system going into a STOP/START READY state under more extreme conditions of the items listed above.

To Start The Engine While In Autostop Mode

While in DRIVE the engine will start when the brake pedal is released or the throttle pedal is depressed. The transmission will automatically reengage upon engine restart. During this transition the brakes will hold the vehicle to avoid undesired vehicle movement.

Conditions that will cause the engine to start automatically while in Autostop mode

The Engine Will Start Automatically When:

- The transmission selector is moved from DRIVE to REVERSE or NEUTRAL
- To maintain cabin temperature near the HVAC settings
- HVAC is set to full defrost mode
- Autostop time exceeds 5 minutes
- Battery voltage drops too low

- Low brake vacuum (e.g. after several brake pedal applications)
- STOP/START OFF switch is pressed
- 4WD system is put into 4LO mode
- The emissions system requires it
- A STOP/START system error occurs

Conditions that force an automatic shift to PARK while in Autostop mode:

The Engine Will Not Start Automatically and the Transmission will be placed in PARK if:

- The driver door is open and brake pedal released
- The driver door is open and the driver seat belt is unbuckled
- The engine hood has been opened
- A STOP/START system error occurs

The engine may then be restarted by moving the transmission shift selector out of PARK (e.g. to DRIVE) or, in some cases, only by a KEY START. The Electronic Vehicle Information Center (EVIC) will display a SHIFT OUT OF PARK message, or a STOP/START KEY START REQUIRED message, to indicate which action is required. Refer to "Electronic Vehicle Information Center (EVIC)" in "Understanding Your Instrument Panel" for further information.

To Manually Turn Off The Stop Start System

1. Press the STOP/START Off switch (located on the switch bank). The light on the switch will illuminate.

STOP/START OFF Switch

2. The STOP/START OFF message will appear in Electronic Vehicle Information Center (EVIC). Refer to "Electronic Vehicle Information Center (EVIC)" in "Understanding Your Instrument Panel" for further information.
3. At the next vehicle stop (after turning off the STOP/START system) the engine will not be stopped.
4. If the STOP/START system is manually turned off, the engine can only be started and stopped by cycling the ignition switch.
5. The STOP/START system will reset itself back to an ON condition every time the key is turned off and back on.

To Manually Turn On The Stop Start System

1. Press the STOP/START Off switch (located on the switch bank).
2. The light on the switch will turn off.

System Malfunction

If there is a malfunction in the STOP/START system, the system will not shut down the engine. A SERVICE STOP/START SYSTEM message will appear in the Electronic Vehicle Information Center (EVIC). Refer to "Electronic Vehicle Information Center (EVIC)" in "Understanding Your Instrument Panel" for further information.

The system will need to be checked by your authorized dealer.

ENGINE BLOCK HEATER — IF EQUIPPED

The engine block heater warms the engine, and permits quicker starts in cold weather. Connect the cord to a standard 110-115 Volt AC electrical outlet with a grounded, three-wire extension cord.

1500 Models

The engine block heater cord is routed under the hood on the passenger side of the vehicle near the right head lamp assembly. It is located between the front grill and the radiator, but underneath the black upper seal.

2500/3500 Models

The engine block heater cord is routed through the grille by the right front tow hook.

It includes a removable cap that is secured by a tethered strap. It also has a c-clip that is used for storage when not

in use for the winter months. During winter months, remove the heater cord wiring assembly from itself on the c-clip.

The engine block heater must be plugged in at least one hour to have an adequate warming effect on the engine.

WARNING!

Remember to disconnect the engine block heater cord before driving. Damage to the 110-115 Volt electrical cord could cause electrocution.

AUTOMATIC TRANSMISSION

CAUTION!

Damage to the transmission may occur if the following precautions are not observed:

- **Shift into PARK only after the vehicle has come to a complete stop.**
- **Shift into or out of REVERSE only after the vehicle has come to a complete stop and the engine is at idle speed.**
- **Do not shift between PARK, REVERSE, NEUTRAL, or DRIVE when the engine is above idle speed.**
- **Before shifting into any gear, make sure your foot is firmly pressing the brake pedal.**

NOTE: You must press and hold the brake pedal while shifting out of PARK.

WARNING!

- **It is dangerous to shift out of PARK or NEUTRAL if the engine speed is higher than idle speed. If your foot is not firmly pressing the brake pedal, the vehicle could accelerate quickly forward or in reverse. You could lose control of the vehicle and hit someone or something. Only shift into gear when the engine is idling normally and your foot is firmly pressing the brake pedal.**

(Continued)

WARNING! ***(Continued)***

- **Unintended movement of a vehicle could injure those in or near the vehicle. As with all vehicles, you should never exit a vehicle while the engine is running. Before exiting a vehicle, always apply the parking brake, shift the transmission into PARK, turn the engine OFF, and remove the key fob. When the ignition is in the OFF position, the transmission is locked in PARK, securing the vehicle against unwanted movement.**
- **When leaving the vehicle, always remove the key fob and lock your vehicle.**

(Continued)

WARNING! ***(Continued)***

- **Never leave children alone in a vehicle, or with access to an unlocked vehicle. Allowing children to be in a vehicle unattended is dangerous for a number of reasons. A child or others could be seriously or fatally injured. Children should be warned not to touch the parking brake, brake pedal or the transmission shifter.**
- **Do not leave the key fob in or near the vehicle (or in a location accessible to children), and do not leave the ignition (of a vehicle equipped with Keyless Enter-N-Go™) in the ACC or ON/RUN position. A child could operate power windows, other controls, or move the vehicle.**

Key Ignition Park Interlock

This vehicle is equipped with a Key Ignition Park Interlock which requires the transmission to be in PARK before the ignition switch can be turned to the full OFF (key removal) position. The key fob can only be removed from the ignition when the ignition is in the full OFF position, and the transmission is locked in PARK whenever the ignition switch is in the full OFF position.

NOTE: If a malfunction occurs, the system will trap the key fob in the ignition switch to warn you that this safety feature is inoperable. The engine can be started and stopped but the key fob cannot be removed until you obtain service.

Brake/Transmission Shift Interlock System

This vehicle is equipped with a Brake Transmission Shift Interlock System (BTSI) that holds the shift lever in PARK unless the brakes are applied. To shift the transmission out of PARK, the ignition switch must be turned to the ON/RUN position (engine running, for vehicles with eight-speed transmission) and the brake pedal must be pressed.

Eight-Speed Automatic Transmission – If Equipped

Your vehicle is equipped with a state of the art, fuel efficient eight-speed transmission. The electronic shifter control is located on the instrument panel. The transmission gear range (PRND) is displayed both above the shifter control and in the Electronic Vehicle Information Center (EVIC). To select a gear range, simply rotate the shifter control. You must press the brake pedal to shift the transmission out of PARK (see Brake/Transmission Shift Interlock System). You must also press the brake pedal to shift from NEUTRAL into DRIVE or REVERSE, when the vehicle is stopped or moving at low speeds. To shift past multiple gear ranges at once (such as Park to Drive), simply rotate the shifter control to the appropriate detent. Select the DRIVE range for normal driving.

The electronically-controlled transmission provides a precise shift schedule. The transmission electronics are self-calibrating; therefore, the first few shifts on a new vehicle may be somewhat abrupt. This is a normal condition, and precision shifts will develop within a few hundred miles (kilometers).

Only shift from DRIVE to PARK or REVERSE when the accelerator pedal is released and the vehicle is stopped. Be sure to keep your foot on the brake pedal when shifting between these gears.

The transmission shifter control has only PARK, REVERSE, NEUTRAL, and DRIVE positions. Manual downshifts can be made using the Electronic Range Select (ERS) switches (described later in this section). Pressing the GEAR-/GEAR+ switches (on the steering wheel) while in the DRIVE position will select the highest available transmission gear, and will display that gear in the instrument cluster as 8, 7, 6, 5, 4, 3, 2, 1.

Electronic Transmission Shifter

Gear Ranges

DO NOT race the engine when shifting from PARK or NEUTRAL into another gear range.

NOTE: After selecting any gear range, wait a moment to allow the selected gear to engage before accelerating. This is especially important when the engine is cold.

PARK

This range supplements the parking brake by locking the transmission. The engine can be started in this range. Never attempt to use PARK while the vehicle is in motion. Apply the parking brake when leaving the vehicle in this range.

When parking on a level surface, you may shift the transmission into PARK first, and then apply the parking brake.

When parking on a hill, apply the parking brake before shifting the transmission to PARK. As an added precaution, turn the front wheels toward the curb on a downhill grade and away from the curb on an uphill grade.

NOTE: On four-wheel drive vehicles be sure that the transfer case is in a drive position.

WARNING!

- **Never use the PARK position as a substitute for the parking brake. Always apply the parking brake fully when parked to guard against vehicle movement and possible injury or damage.**
- **Your vehicle could move and injure you and others if it is not in PARK. Make sure the transmission is in PARK before leaving the vehicle.**
- **It is dangerous to shift out of PARK or NEUTRAL if the engine speed is higher than idle speed. If your foot is not firmly pressing the brake pedal, the vehicle could accelerate quickly forward or in reverse. You could lose control of the vehicle and hit someone or something. Only shift into gear when the engine is idling normally and your foot is firmly pressing the brake pedal.**

(Continued)

WARNING! *(Continued)*

- **Unintended movement of a vehicle could injure those in or near the vehicle. As with all vehicles, you should never exit a vehicle while the engine is running. Before exiting a vehicle, always apply the parking brake, shift the transmission into PARK, turn the engine OFF, and remove the key fob. When the ignition is in the OFF position, the transmission is locked in PARK, securing the vehicle against unwanted movement.**
- **When leaving the vehicle, always remove the key fob and lock your vehicle.**

(Continued)

WARNING! *(Continued)*

- **Never leave children alone in a vehicle, or with access to an unlocked vehicle. Allowing children to be in a vehicle unattended is dangerous for a number of reasons. A child or others could be seriously or fatally injured. Children should be warned not to touch the parking brake, brake pedal or the transmission shifter. Do not leave the key fob in or near the vehicle (or in a location accessible to children), and do not leave the ignition (in a vehicle equipped with Keyless Enter-N-Go™) in the ACC or ON/RUN position. A child could operate power windows, other controls, or move the vehicle.**

(Continued)

WARNING! ***(Continued)***

- **Do not leave the key fob in or near the vehicle (or in a location accessible to children), and do not leave the ignition (of a vehicle equipped with Keyless Enter-N-Go™) in the ACC or ON/RUN position. A child could operate power windows, other controls, or move the vehicle.**
- **Before moving the shift lever out of PARK, you must start the engine, and also press the brake pedal. Otherwise, damage to the shift lever could result.**

CAUTION!

- **DO NOT race the engine when shifting from PARK or NEUTRAL into another gear range, as this can damage the drivetrain.**
- **Before moving the shift lever out of PARK, you must start the engine, and also press the brake pedal. Otherwise, damage to the shift lever could result.**

The following indicator should be used to ensure that you have engaged the transmission into the PARK position:

- With brake pedal released, look at the transmission gear position display and verify that it indicates the PARK position.

REVERSE

This range is for moving the vehicle backward. Shift into REVERSE only after the vehicle has come to a complete stop.

NEUTRAL

Use this range when the vehicle is standing for prolonged periods with the engine running. The engine may be started in this range. Apply the parking brake and shift the transmission into PARK if you must leave the vehicle.

WARNING!

Do not coast in NEUTRAL and never turn off the ignition to coast down a hill. These are unsafe practices that limit your response to changing traffic or road conditions. You might lose control of the vehicle and have a collision.

CAUTION!

Towing the vehicle, coasting, or driving for any other reason with the transmission in NEUTRAL can cause severe transmission damage. Refer to "Recreational Towing" in "Starting And Operating" and "Towing A Disabled Vehicle" in "What To Do In Emergencies" for further information.

DRIVE

This range should be used for most city and highway driving. It provides the smoothest upshifts and downshifts, and the best fuel economy. The transmission automatically upshifts through all forward gears. The DRIVE position provides optimum driving characteristics under all normal operating conditions.

When frequent transmission shifting occurs (such as when operating the vehicle under heavy loading conditions, in hilly terrain, traveling into strong head winds, or while towing heavy trailers), use the Electronic Range Select (ERS) switches (refer to "Electronic Range Select (ERS) Operation" in this section) to select a lower gear range. Under these conditions, using a lower gear range will improve performance and extend transmission life by reducing excessive shifting and heat buildup.

During extremely cold temperatures (-22°F [-30°C] or below), transmission operation may be modified depending on engine and transmission temperature as well as vehicle speed. Normal operation will resume once the transmission temperature has risen to a suitable level.

Transmission Limp Home Mode

Transmission function is monitored electronically for abnormal conditions. If a condition is detected that could result in transmission damage, Transmission Limp Home Mode is activated. In this mode, the transmission may operate only in certain gears, or may not shift at all. Vehicle performance may be severely degraded and the engine may stall. In some situations, the transmission may not re-engage if the engine is turned off and restarted. The Malfunction Indicator Light (MIL) may be illuminated. A message in the instrument cluster will inform the driver of the more serious conditions, and indicate what actions may be necessary.

In the event of a momentary problem, the transmission can be reset to regain all forward gears by performing the following steps:

NOTE: In cases where the instrument cluster message indicates the transmission may not re-engage after engine shutdown, perform this procedure only in a desired location (preferably, at your authorized dealer).

1. Stop the vehicle.
2. Shift the transmission into PARK, if possible. If not, shift the transmission to NEUTRAL.
3. Turn the ignition switch to the OFF position. On vehicles with Keyless Enter-N-Go™, press and hold the ignition switch until the engine turns OFF.
4. Wait approximately 30 seconds.
5. Restart the engine.
6. Shift into the desired gear range. If the problem is no longer detected, the transmission will return to normal operation.

NOTE: Even if the transmission can be reset, we recommend that you visit your authorized dealer at your earliest possible convenience. Your authorized dealer has diagnostic equipment to determine if the problem could recur.

If the transmission cannot be reset, authorized dealer service is required.

Electronic Range Select (ERS) Operation – Eight-Speed Transmission

The Electronic Range Select (ERS) switches allow the driver to limit the highest available gear when the transmission is in DRIVE. For example, if you shift the transmission into 3 (third gear), the transmission will not shift above third gear (except to prevent engine over-speed), but will shift down into second and first gears normally.

You can switch between DRIVE and ERS mode at any vehicle speed. When the shifter control is in the DRIVE position, the transmission will operate automatically, shifting between all available gears. Tapping the GEAR- switch (on the steering wheel) will activate ERS mode, display the current gear in the instrument cluster, and maintain that gear as the top available gear. Once in ERS mode, tapping the GEAR- or GEAR+ switch will change the top available gear.

1 — ERS (-) Switch 2 — ERS (+) Switch

To exit ERS mode, simply press and hold the GEAR+ switch until “D” is once again displayed in the instrument cluster.

WARNING!

Do not downshift for additional engine braking on a slippery surface. The drive wheels could lose their grip and the vehicle could skid, causing a collision or personal injury.

When to Use TOW/HAUL Mode

When driving in hilly areas, towing a trailer, carrying a heavy load, etc., and frequent transmission shifting occurs, press the TOW/HAUL switch to activate TOW/HAUL mode. This will improve performance and reduce the potential for transmission overheating or failure due to excessive shifting.

TOW/HAUL Switch

The "TOW/HAUL Indicator Light" will illuminate in the instrument cluster to indicate that TOW/HAUL mode has been activated. Pressing the switch a second time restores normal operation. Normal operation is always the default at engine start-up. If TOW/HAUL mode is desired, the switch must be pressed each time the engine is started.

Six-Speed Automatic Transmission — 1500 Models Only

The transmission gear position display (located in the instrument cluster) indicates the transmission gear range. The shift lever is mounted either on the right side of the steering column (if equipped) or on the console (if equipped). You must press the brake pedal to move the shift lever out of PARK (refer to "Brake/Transmission Shift Interlock System" in this section). To drive, move the shift lever from PARK or NEUTRAL to the DRIVE position. Pull the shift lever toward you when shifting into REVERSE or PARK, or when shifting out of PARK (column shift only).

The electronically-controlled transmission provides a precise shift schedule. The transmission electronics are self-calibrating; therefore, the first few shifts on a new vehicle may be somewhat abrupt. This is a normal condition, and precision shifts will develop within a few hundred miles (kilometers).

Only shift from DRIVE to PARK or REVERSE when the accelerator pedal is released and the vehicle is stopped. Be sure to keep your foot on the brake pedal when shifting between these gears.

The transmission shift lever has only PARK, REVERSE, NEUTRAL, and DRIVE shift positions. Manual down-shifts can be made using the Electronic Range Select (ERS) shift control (refer to "Electronic Range Select (ERS) Operation" in this section). Pressing the ERS (-/+) switches (column shift) or moving the shift lever to the left or right (-/+) (console shift) while in the DRIVE position will select the highest available transmission gear, and will display that gear in the instrument cluster as 6, 5, 4, 3, 2, 1.

Gear Ranges

DO NOT race the engine when shifting from PARK or NEUTRAL into another gear range.

NOTE: After selecting any gear range, wait a moment to allow the selected gear to engage before accelerating. This is especially important when the engine is cold.

PARK

This range supplements the parking brake by locking the transmission. The engine can be started in this range. Never attempt to use PARK while the vehicle is in motion. Apply the parking brake when leaving the vehicle in this range.

When parking on a level surface, you may shift the transmission into PARK first, and then apply the parking brake.

When parking on a hill, apply the parking brake before shifting the transmission to PARK, otherwise the load on the transmission locking mechanism may make it difficult to move the shift lever out of PARK. As an added precaution, turn the front wheels toward the curb on a downhill grade and away from the curb on an uphill grade.

WARNING!

- **Never use the PARK position as a substitute for the parking brake. Always apply the parking brake fully when parked to guard against vehicle movement and possible injury or damage.**

(Continued)

WARNING! *(Continued)*

- **Your vehicle could move and injure you and others if it is not completely in PARK. Check by trying to move the shift lever out of PARK with the brake pedal released. Make sure the transmission is in PARK before leaving the vehicle.**
- **It is dangerous to shift out of PARK or NEUTRAL if the engine speed is higher than idle speed. If your foot is not firmly pressing the brake pedal, the vehicle could accelerate quickly forward or in reverse. You could lose control of the vehicle and hit someone or something. Only shift into gear when the engine is idling normally and your foot is firmly pressing the brake pedal.**

(Continued)

WARNING! *(Continued)*

- **Unintended movement of a vehicle could injure those in and near the vehicle. As with all vehicles, you should never exit a vehicle while the engine is running. Before exiting a vehicle, always apply the parking brake, shift the transmission into PARK, turn the engine OFF, and remove the key fob. When the ignition is in the OFF position, the transmission is locked in PARK, securing the vehicle against unwanted movement.**
- **When leaving the vehicle, always remove the key fob and lock your vehicle.**

(Continued)

WARNING! *(Continued)*

- **Never leave children alone in a vehicle, or with access to an unlocked vehicle. Allowing children to be in a vehicle unattended is dangerous for a number of reasons. A child or others could be seriously or fatally injured. Children should be warned not to touch the parking brake, brake pedal or the shift lever. Do not leave the key fob in or near the vehicle (or in a location accessible to children), and do not leave the ignition (of a vehicle equipped with Keyless Enter-N-Go™) in the ACC or ON/RUN position. A child could operate power windows, other controls, or move the vehicle.**

CAUTION!

- **Before moving the shift lever out of PARK, you must turn the ignition switch from the OFF position to the ON/RUN position, and also press the brake pedal. Otherwise, damage to the shift lever could result.**
- **DO NOT race the engine when shifting from PARK or NEUTRAL into another gear range, as this can damage the drivetrain.**

The following indicators should be used to ensure that you have engaged the transmission into the PARK position:

- When shifting into PARK, pull the column-mounted shift lever toward you and move it all the way counterclockwise until it stops. For console-mounted shifter, firmly move the shift lever all the way forward and to the left until it stops.

- Release the shift lever and make sure it is fully seated in the PARK gate.
- Look at the transmission gear position display and verify that it indicates the PARK position.
- With brake pedal released, verify that the shift lever will not move out of PARK.

REVERSE

This range is for moving the vehicle backward. Shift into Reverse only after the vehicle has come to a complete stop.

NEUTRAL

Use this range when the vehicle is standing for prolonged periods with the engine running. The engine may be started in this range. Apply the parking brake and shift the transmission into PARK if you must leave the vehicle.

WARNING!

Do not coast in NEUTRAL and never turn off the ignition to coast down a hill. These are unsafe practices that limit your response to changing traffic or road conditions. You might lose control of the vehicle and have a collision.

CAUTION!

Towing the vehicle, coasting, or driving for any other reason with the transmission in NEUTRAL can cause severe transmission damage. Refer to "Recreational Towing" in "Starting And Operating" and "Towing A Disabled Vehicle" in "What To Do In Emergencies" for further information.

DRIVE

This range should be used for most city and highway driving. It provides the smoothest upshifts and downshifts, and the best fuel economy. The transmission automatically upshifts through underdrive first and second gears, direct third gear and overdrive fourth and fifth gears. The DRIVE position provides optimum driving characteristics under all normal operating conditions.

To access all six available gears, you must use the Electronic Range Select (ERS) shift control, described below.

When frequent transmission shifting occurs (such as when operating the vehicle under heavy loading conditions, in hilly terrain, traveling into strong head winds, or while towing heavy trailers), use the Electronic Range Select (ERS) shift control (refer to "Electronic Range Select (ERS) Operation)" in this section) to select a lower gear range. Under these conditions, using a lower gear range will improve performance and extend transmission life by reducing excessive shifting and heat buildup.

If the transmission temperature exceeds normal operating limits, the powertrain controller will modify the transmission shift schedule and expand the range of torque converter clutch engagement. This is done to prevent transmission damage due to overheating.

If the transmission becomes extremely hot or is in danger of overheating, the "Transmission Temperature Warning Light" may illuminate and the transmission may operate differently until the transmission cools down.

NOTE: Use caution when operating a heavily loaded vehicle at low speeds (such as towing a trailer up a steep grade, or in stop-and-go traffic) during hot weather. In these conditions, torque converter slip can impose a significant additional heat load on the cooling system. Downshifting the transmission to the lowest possible gear (when climbing a grade), or shifting to NEUTRAL (when stopped in heavy traffic) can help to reduce this excess heat generation.

During cold temperatures, transmission operation may be modified depending on engine and transmission temperature as well as vehicle speed. This feature improves warm up time of the engine and transmission to achieve maximum efficiency. Engagement of both the torque converter clutch and the top overdrive gear are inhibited until the transmission fluid is warm (refer to the "Note" under "Torque Converter Clutch" in this section).

During extremely cold temperatures (-16°F [-27°C] or below), operation may briefly be limited to first and direct gears only. Normal operation will resume once the transmission temperature has risen to a suitable level.

Transmission Limp Home Mode

Transmission function is monitored electronically for abnormal conditions. If a condition is detected that could result in transmission damage, Transmission Limp Home Mode is activated. In this mode, the transmission remains in direct gear regardless of which forward gear is selected. PARK, REVERSE, and NEUTRAL will continue to operate. The Malfunction Indicator Light (MIL) may be illuminated. Limp Home Mode allows the vehicle to be driven to an authorized dealer for service without damaging the transmission.

In the event of a momentary problem, the transmission can be reset to regain all forward gears by performing the following steps:

1. Stop the vehicle.
2. Shift the transmission into PARK.
3. Turn the ignition switch to the OFF position.
4. Wait approximately 10 seconds.
5. Restart the engine.
6. Shift into the desired gear range. If the problem is no longer detected, the transmission will return to normal operation.

NOTE: Even if the transmission can be reset, we recommend that you visit your authorized dealer at your earliest possible convenience. Your authorized dealer has diagnostic equipment to determine if the problem could recur.

If the transmission cannot be reset, authorized dealer service is required.

Electronic Range Select (ERS) Operation – Six-Speed Transmission

The Electronic Range Select (ERS) shift control allows the driver to limit the highest available gear when the shift lever is in the DRIVE position. For example, if you shift the transmission into 3 (third gear), the transmission will not shift above third gear, but will shift down into second and first gears normally.

Use of ERS (or TOW/HAUL mode) also enables an additional underdrive gear which is not normally used during through-gear accelerations. This additional gear can improve vehicle performance and cooling capability when towing a trailer on certain grades. In ERS mode, gears 1 though 3 are underdrive gears, and ERS 4 is direct drive. ERS 5 and 6 (Overdrive gears) are the same as the normal fourth and fifth gears.

You can switch between DRIVE and ERS mode at any vehicle speed. When the shift lever is in the DRIVE position, the transmission will operate automatically, shifting between all available gears. Tapping the ERS (-) switch (column shift) or tapping the shift lever to the left (-) (console shift) will activate ERS mode, display the current gear in the instrument cluster, and maintain that gear as the top available gear. For example, if you are in DRIVE and are in third (direct) gear, when you tap the shift lever/switch one time in the (-) direction, the display will show 4 (ERS 4 is direct gear). Another tap down (-) will shift the transmission down to ERS 3 (the added underdrive gear). Once in ERS mode, tapping ERS (-) or (+) will change the top available gear.

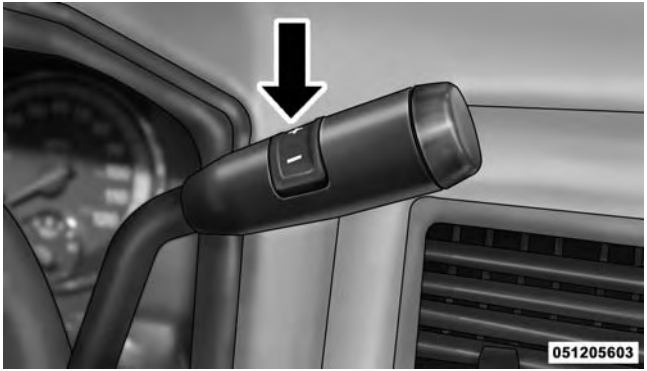

Column Shift Lever

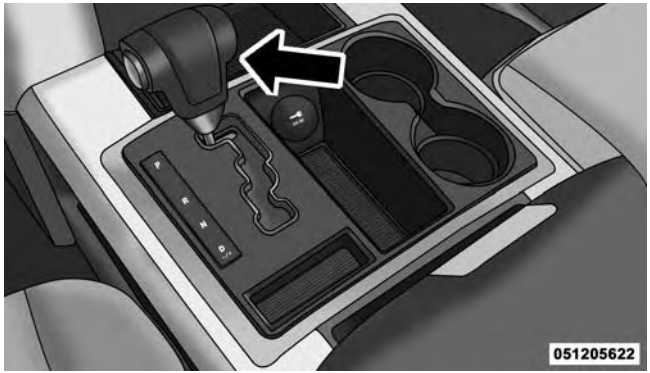

Console Shift Lever

To exit ERS mode, simply press and hold the shift lever to the right (+) (console shift) or press the ERS (+) switch (column shift) until "D" is once again displayed in the instrument cluster.

WARNING!

Do not downshift for additional engine braking on a slippery surface. The drive wheels could lose their grip and the vehicle could skid, causing a collision or personal injury.

NOTE: To select the proper gear position for maximum deceleration (engine braking), simply press and hold the shift lever to the left (-) (console shift) or the ERS (-) switch down (column shift). The transmission will shift to the range from which the vehicle can best be slowed down.

CAUTION!

When using ERS for engine braking while descending steep grades, be careful not to overspeed the engine. Apply the brakes as needed to prevent engine overspeed.

Overdrive Operation

The automatic transmission includes an electronically controlled Overdrive (fourth and fifth gears). The transmission will automatically shift into Overdrive if the following conditions are present:

- the shift lever is in the DRIVE position,
- the transmission fluid has reached an adequate temperature,
- the engine coolant (antifreeze) has reached an adequate temperature,
- vehicle speed is sufficiently high, and
- the TOW/HAUL switch has not been activated.

When To Use TOW/HAUL Mode

When driving in hilly areas, towing a trailer, carrying a heavy load, etc., and frequent transmission shifting occurs, press the TOW/HAUL switch to activate TOW/HAUL mode. This will improve performance and reduce the potential for transmission overheating or failure due to excessive shifting. When operating in TOW/HAUL mode, transmission upshifts are delayed, and the transmission will automatically downshift (for engine braking) when the throttle is closed and/or during steady braking maneuvers.

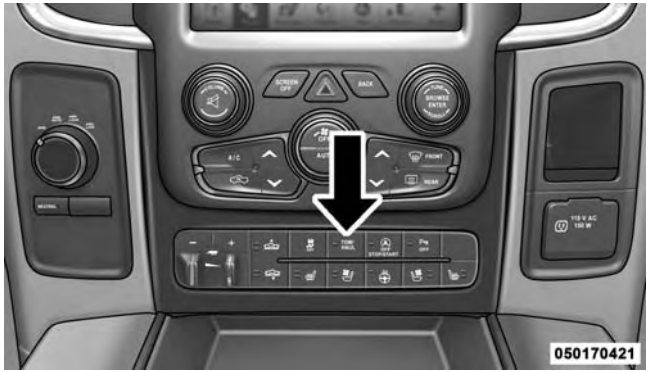

TOW/HAUL Switch

The "TOW/HAUL Indicator Light" will illuminate in the instrument cluster to indicate that TOW/HAUL mode has been activated. Pressing the switch a second time restores normal operation. Normal operation is always the default at engine start-up. If TOW/HAUL mode is desired, the switch must be pressed each time the engine is started.

WARNING!

Do not use the "TOW/HAUL" feature when driving in icy or slippery conditions. The increased engine braking can cause the rear wheels to slide, and the vehicle to swing around with the possible loss of vehicle control, which may cause an accident possibly resulting in personal injury or death.

Torque Converter Clutch

A feature designed to improve fuel economy has been included in the automatic transmission on your vehicle. A clutch within the torque converter engages automatically at calibrated speeds. This may result in a slightly different feeling or response during normal operation in the upper gears. When the vehicle speed drops or during some accelerations, the clutch automatically disengages.

NOTE:

- The torque converter clutch will not engage, and the transmission will not shift into the top overdrive gear, until the transmission fluid and engine coolant are warm [usually after 1 to 3 miles (2 to 5 km) of driving]. Because top gear is disabled, and the engine speed is higher when the torque converter clutch is not engaged, it may seem as if the transmission is not shifting properly when cold. This is normal. Using the Electronic Range Select (ERS) shift control, when the transmission is sufficiently warm, will demonstrate that the transmission is able to shift into and out of Overdrive.
- If the vehicle has not been driven for several days, the first few seconds of operation after shifting the transmission into gear may seem sluggish. This is due to the fluid partially draining from the torque converter into the transmission. This condition is normal and will not cause damage to the transmission. The torque converter will refill within five seconds after starting the engine.

Six-Speed Automatic Transmission — 2500/3500 Models Only

The transmission gear position display (located in the instrument cluster) indicates the transmission gear range. The shift lever is mounted on the right side of the steering column. You must press the brake pedal to move the shift lever out of PARK (refer to “Brake/Transmission Shift Interlock System” in this section). To drive, move the shift lever from PARK or NEUTRAL to the DRIVE position. Pull the shift lever toward you when shifting into REVERSE or PARK, or when shifting out of PARK.

The electronically-controlled transmission provides a precise shift schedule. The transmission electronics are self-calibrating; therefore, the first few shifts on a new

vehicle may be somewhat abrupt. This is a normal condition, and precision shifts will develop within a few hundred miles (kilometers).

Only shift from DRIVE to PARK or REVERSE when the accelerator pedal is released and the vehicle is stopped. Be sure to keep your foot on the brake pedal when shifting between these gears.

The transmission shift lever has only PARK, REVERSE, NEUTRAL, and DRIVE shift positions. Manual down-shifts can be made using the Electronic Range Select (ERS) shift control (refer to "Electronic Range Select (ERS) Operation" in this section). Pressing the ERS (-/+) switches (on the shift lever) while in the DRIVE position will select the highest available transmission gear, and will display that gear in the instrument cluster as 6, 5, 4, 3, 2, 1.

Gear Ranges

DO NOT race the engine when shifting from PARK or NEUTRAL into another gear range.

NOTE: After selecting any gear range, wait a moment to allow the selected gear to engage before accelerating. This is especially important when the engine is cold.

PARK

This range supplements the parking brake by locking the transmission. The engine can be started in this range. Never attempt to use PARK while the vehicle is in motion. Apply the parking brake when leaving the vehicle in this range.

When parking on a level surface, you may shift the transmission into PARK first, and then apply the parking brake.

When parking on a hill, apply the parking brake before shifting the transmission to PARK, otherwise the load on the transmission locking mechanism may make it difficult to move the shift lever out of PARK. As an added precaution, turn the front wheels toward the curb on a downhill grade and away from the curb on an uphill grade.

On four-wheel drive vehicles be sure that the transfer case is in a drive position.

WARNING!

- **Never use the PARK position as a substitute for the parking brake. Always apply the parking brake fully when parked to guard against vehicle movement and possible injury or damage.**

(Continued)

WARNING! ***(Continued)***

- **Your vehicle could move and injure you and others if it is not completely in PARK. Check by trying to move the shift lever out of PARK with the brake pedal released. Make sure the transmission is in PARK before leaving the vehicle.**
- **It is dangerous to shift out of PARK or NEUTRAL if the engine speed is higher than idle speed. If your foot is not firmly pressing the brake pedal, the vehicle could accelerate quickly forward or in reverse. You could lose control of the vehicle and hit someone or something. Only shift into gear when the engine is idling normally and your foot is firmly pressing the brake pedal.**

(Continued)

WARNING! *(Continued)*

- **Unintended movement of a vehicle could injure those in and near the vehicle. As with all vehicles, you should never exit a vehicle while the engine is running. Before exiting a vehicle, always apply the parking brake, shift the transmission into PARK, turn the engine OFF, and remove the key fob. When the ignition is in the OFF position, the transmission is locked in PARK, securing the vehicle against unwanted movement.**
- **When leaving the vehicle, always remove the key fob and lock your vehicle.**

(Continued)

WARNING! *(Continued)*

- **Never leave children alone in a vehicle, or with access to an unlocked vehicle. Allowing children to be in a vehicle unattended is dangerous for a number of reasons. A child or others could be seriously or fatally injured. Children should be warned not to touch the parking brake, brake pedal or the shift lever. Do not leave the key fob in or near the vehicle (or in a location accessible to children), and do not leave the ignition (of a vehicle equipped with Keyless Enter-N-Go™) in the ACC or ON/RUN position. A child could operate power windows, other controls, or move the vehicle.**

CAUTION!

- **Before moving the shift lever out of PARK, you must turn the ignition switch from the OFF position to the ON/RUN position, and also press the brake pedal. Otherwise, damage to the shift lever could result.**
- **DO NOT race the engine when shifting from PARK or NEUTRAL into another gear range, as this can damage the drivetrain.**

The following indicators should be used to ensure that you have engaged the transmission into the PARK position:

- When shifting into PARK, pull the shift lever toward you and move it all the way counterclockwise until it stops.
- Release the shift lever and make sure it is fully seated in the PARK gate.
- Look at the transmission gear position display and verify that it indicates the PARK position.
- With brake pedal released, verify that the shift lever will not move out of PARK.

REVERSE

This range is for moving the vehicle backward. Shift into REVERSE only after the vehicle has come to a complete stop.

NEUTRAL

Use this range when the vehicle is standing for prolonged periods with the engine running. The engine may be started in this range. Apply the parking brake and shift the transmission into PARK if you must leave the vehicle.

WARNING!

Do not coast in NEUTRAL and never turn off the ignition to coast down a hill. These are unsafe practices that limit your response to changing traffic or road conditions. You might lose control of the vehicle and have a collision.

CAUTION!

Towing the vehicle, coasting, or driving for any other reason with the transmission in NEUTRAL can cause severe transmission damage. Refer to "Recreational Towing" in "Starting And Operating" and "Towing A Disabled Vehicle" in "What To Do In Emergencies" for further information.

DRIVE

This range should be used for most city and highway driving. It provides the smoothest upshifts and downshifts, and the best fuel economy. The transmission automatically upshifts through underdrive first, second, and third gears, direct fourth gear and overdrive fifth and sixth gears. The DRIVE position provides optimum driving characteristics under all normal operating conditions.

When frequent transmission shifting occurs (such as when operating the vehicle under heavy loading conditions, in hilly terrain, traveling into strong head winds, or while towing heavy trailers), use the Electronic Range Select (ERS) shift control (refer to "Electronic Range Select (ERS) Operation" in this section) to select a lower gear range. Under these conditions, using a lower gear range will improve performance and extend transmission life by reducing excessive shifting and heat buildup.

If the transmission temperature exceeds normal operating limits, the powertrain controller will modify the transmission shift schedule and expand the range of torque converter clutch engagement. This is done to prevent transmission damage due to overheating.

If the transmission becomes extremely hot or is in danger of overheating, the "Transmission Temperature Warning Light" may illuminate and the transmission may operate differently until the transmission cools down.

NOTE: Use caution when operating a heavily loaded vehicle at low speeds (such as towing a trailer up a steep grade, or in stop-and-go traffic) during hot weather. In these conditions, torque converter slip can impose a significant additional heat load on the cooling system. Downshifting the transmission to the lowest possible gear (when climbing a grade), or shifting to NEUTRAL (when stopped in heavy traffic) can help to reduce this excess heat generation.

During cold temperatures, transmission operation may be modified depending on engine and transmission temperature as well as vehicle speed. This feature improves warm up time of the engine and transmission to achieve maximum efficiency. Engagement of both the torque converter clutch and the top overdrive gear are inhibited until the transmission fluid is warm (refer to the "Note" under "Torque Converter Clutch" in this section). During extremely cold temperatures (-16°F [-27°C] or below), operation may briefly be limited to first and direct gears only. Normal operation will resume once the transmission temperature has risen to a suitable level.

Transmission Limp Home Mode

Transmission function is monitored electronically for abnormal conditions. If a condition is detected that could result in transmission damage, Transmission Limp Home Mode is activated. In this mode, the transmission remains in fourth gear regardless of which forward gear is

selected. PARK, REVERSE, and NEUTRAL will continue to operate. The Malfunction Indicator Light (MIL) may be illuminated. Limp Home Mode allows the vehicle to be driven to an authorized dealer for service without damaging the transmission.

In the event of a momentary problem, the transmission can be reset to regain all forward gears by performing the following steps:

1. Stop the vehicle.
2. Shift the transmission into PARK.
3. Turn the ignition switch to the OFF position.
4. Wait approximately 10 seconds.
5. Restart the engine.
6. Shift into the desired gear range. If the problem is no longer detected, the transmission will return to normal operation.

NOTE: Even if the transmission can be reset, we recommend that you visit your authorized dealer at your earliest possible convenience. Your authorized dealer has diagnostic equipment to determine if the problem could recur.

If the transmission cannot be reset, authorized dealer service is required.

Electronic Range Select (ERS) Operation

The Electronic Range Select (ERS) shift control allows the driver to limit the highest available gear when the shift lever is in the DRIVE position. For example, if you shift the transmission into 3 (third gear), the transmission will not shift above third gear, but will shift down into second and first gears normally.

You can switch between DRIVE and ERS mode at any vehicle speed. When the shift lever is in the DRIVE position, the transmission will operate automatically,

shifting between all available gears. Tapping the ERS (-) switch will activate ERS mode, display the current gear in the instrument cluster, and maintain that gear as the top available gear. Once in ERS mode, tapping ERS (-) or (+) will change the top available gear.

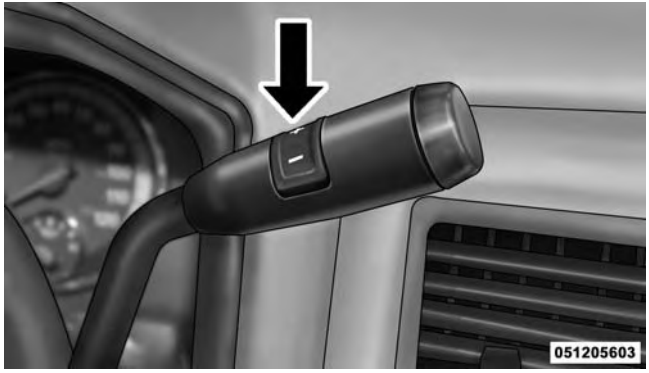

Column Shift Lever

To exit ERS mode, simply press and hold the ERS (+) switch until "D" is once again displayed in the instrument cluster.

WARNING!

Do not downshift for additional engine braking on a slippery surface. The drive wheels could lose their grip and the vehicle could skid, causing a collision or personal injury.

NOTE: To select the proper gear position for maximum deceleration (engine braking), simply press and hold the ERS (-) switch down. The transmission will shift to the range from which the vehicle can best be slowed down.

CAUTION!

When using ERS for engine braking while descending steep grades, be careful not to overspeed the engine. Apply the brakes as needed to prevent engine overspeed.

Overdrive Operation

The automatic transmission includes an electronically controlled Overdrive (fifth and sixth gears). The transmission will automatically shift into Overdrive if the following conditions are present:

- the shift lever is in the DRIVE position,
- the transmission fluid has reached an adequate temperature,
- the engine coolant has reached an adequate temperature,
- vehicle speed is sufficiently high, and
- the TOW/HAUL switch has not been activated.

When To Use TOW/HAUL Mode

When driving in hilly areas, towing a trailer, carrying a heavy load, etc., and frequent transmission shifting occurs, press the TOW/HAUL switch to activate TOW/HAUL mode. This will improve performance and reduce the potential for transmission overheating or failure due to excessive shifting. When operating in TOW/HAUL mode, transmission upshifts are delayed, and the transmission will automatically downshift (for engine braking) during steady braking maneuvers.

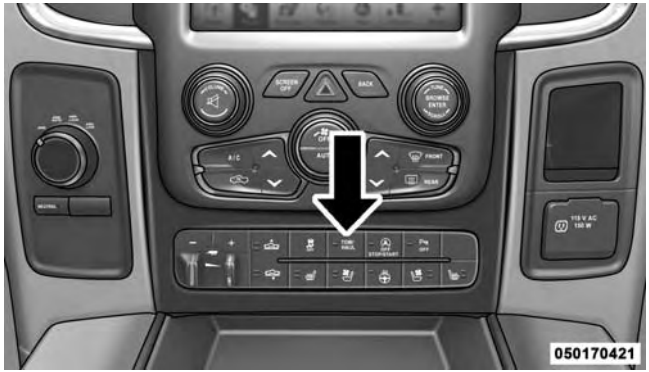

TOW/HAUL Switch

The "TOW/HAUL Indicator Light" will illuminate in the instrument cluster to indicate that TOW/HAUL mode has been activated. Pressing the switch a second time restores normal operation. Normal operation is always the default at engine start-up. If TOW/HAUL mode is desired, the switch must be pressed each time the engine is started.

WARNING!

Do not use the "TOW/HAUL" feature when driving in icy or slippery conditions. The increased engine braking can cause the rear wheels to slide, and the vehicle to swing around with the possible loss of vehicle control, which may cause an accident possibly resulting in personal injury or death.

Torque Converter Clutch

A feature designed to improve fuel economy has been included in the automatic transmission on your vehicle. A clutch within the torque converter engages automatically at calibrated speeds. This may result in a slightly different feeling or response during normal operation in the upper gears. When the vehicle speed drops or during some accelerations, the clutch automatically disengages.

NOTE:

- The torque converter clutch will not engage, and the transmission will not shift to sixth gear, until the transmission fluid and engine coolant are warm [usually after 1 to 3 miles (2 to 5 km) of driving]. Because sixth gear is disabled, and engine speed is higher when the torque converter clutch is not engaged, it may seem as if the transmission is not shifting properly when cold. This is normal. Using the Electronic Range Select (ERS) shift control, when the transmission is sufficiently warm, will demonstrate that the transmission is able to shift into and out of Overdrive.
- If the vehicle has not been driven for several days, the first few seconds of operation after shifting the transmission into gear may seem sluggish. This is due to the fluid partially draining from the torque converter into the transmission. This condition is normal and will not cause damage to the transmission. The torque converter will refill within five seconds after starting the engine.

FOUR-WHEEL DRIVE OPERATION — IF EQUIPPED

Four-wheel drive trucks are equipped with either a manually shifted transfer case or an electronically shifted transfer case. Refer to the operating instructions for your transfer case, located in this section for further information.

Manually Shifted Transfer Case – If Equipped

The transfer case provides four mode positions.

- Two-wheel drive high range (2H)
- Four-wheel drive high range (4H)
- Neutral (N)
- Four-wheel drive low range (4L)

This transfer case is intended to be driven in the 2H position for normal street and highway conditions such as dry, hard surfaced roads.

When additional traction is required, the 4H and 4L positions can be used to lock the front and rear driveshafts together and force the front and rear wheels to rotate at the same speed. This is accomplished by simply moving the shift lever to the desired positions. The 4H and 4L positions are intended for loose, slippery road surfaces only. Driving in the 4H and 4L positions on dry, hard surfaced roads may cause increased tire wear and damage to the driveline components.

The "Transfer Case Position Indicator Light" in the instrument cluster will alert the driver that the vehicle is in four-wheel drive and that the front and rear driveshafts are locked together. This light will illuminate when the transfer case is shifted into either the 4H or 4L position. There is no light for the 2H or NEUTRAL positions.

When operating your vehicle in 4L, the engine speed is approximately three times that of the 2H or 4H positions at a given road speed. Take care not to overspeed the engine and do not exceed 25 mph (40 km/h).

Proper operation of four-wheel drive vehicles depends on tires of equal size, type and circumference on each wheel. Any difference will adversely affect shifting and can cause damage to the drivetrain.

NOTE: Do not attempt to make a shift while only the front or rear wheels are spinning. The front and rear driveshaft speeds must be equal for the shift to take place. Shifting while only the front or rear wheels are spinning can cause damage to the transfer case.

Because four-wheel drive provides improved traction, there is a tendency to exceed safe turning and stopping speeds. Do not go faster than road conditions permit.

NOTE: Delayed shifts out of four-wheel drive may be experienced due to uneven tire wear, low or uneven tire pressures, excessive vehicle loading, or cold temperatures.

WARNING!

You or others could be injured or killed if you leave the vehicle unattended with the transfer case in the NEUTRAL position without first fully engaging the parking brake. The transfer case NEUTRAL position disengages both the front and rear driveshafts from the powertrain and will allow the vehicle to move regardless of the transmission position. The parking brake should always be applied when the driver is not in the vehicle.

For additional information on the appropriate use of each transfer case mode position, see the information below:

2H

Rear-Wheel Drive High Range - This range is for normal street and highway driving on dry hard surfaced roads.

4H

Four-Wheel Drive High Range - This range locks the front and rear driveshafts together forcing the front and rear wheels to rotate at the same speed. Additional traction for loose, slippery road surfaces only.

N

Neutral - This range disengages the front and rear driveshafts from the powertrain. To be used for flat towing behind another vehicle. Refer to “Recreational Towing” in “Starting and Operating” for further information.

4L

Four-Wheel Drive Low Range - This range locks the front and rear driveshafts together forcing the front and rear wheels to rotate at the same speed. Additional traction and maximum pulling power for loose, slippery road surfaces only. Do not exceed 25 mph (40 km/h).

CAUTION!

Do not use 4L (Low) range when operating the vehicle on dry pavement. Driveline hardware damage can result.

Shifting Procedure – Manually Shifted Transfer Case

2H To 4H

Shifting between 2H and 4H can be made with the vehicle stopped or in motion. If the vehicle is in motion, shifts can be made up to 55 mph (88 km/h). With the vehicle in motion, the transfer case will engage/disengage faster if you momentarily release the accelerator pedal after completing the shift. Apply a constant force when shifting the transfer case lever.

2H Or 4H To 4L

With the vehicle rolling at 2 to 3 mph (3 to 5 km/h), shift the transmission into NEUTRAL. While the vehicle is coasting at 2 to 3 mph (3 to 5 km/h), shift the transfer case lever firmly to the desired position. Do not pause in transfer case NEUTRAL.

NOTE:

- Pausing in transfer case NEUTRAL in vehicles equipped with an automatic transmission may require shutting the engine OFF to avoid gear clash while completing the shift. If difficulty occurs, shift the transmission into NEUTRAL, hold foot on brake, and turn the engine OFF. Make shift to the desired mode.

- Shifting into or out of 4L is possible with the vehicle completely stopped, however difficulty may occur due to the mating clutch teeth not being properly aligned. Several attempts may be required for clutch teeth alignment and shift completion to occur. The preferred method is with the vehicle rolling 2 to 3 mph (3 to 5 km/h). Avoid attempting to engage or disengage 4L with the vehicle moving faster than 2 to 3 mph (3 to 5 km/h).
- Do not attempt to shift into or from 4L while the transmission is in gear.

Transfer Case Position Indicator Light

The "Transfer Case Position Indicator Light" in the instrument cluster is used to alert the driver that the front axle is fully engaged and all four wheels are driving.

Electronically Shifted Transfer Case (Four-Position Switch) – If Equipped

This is an electronic shift transfer case and is operated by the 4WD Control Switch (Transfer Case Switch), which is located on the instrument panel.

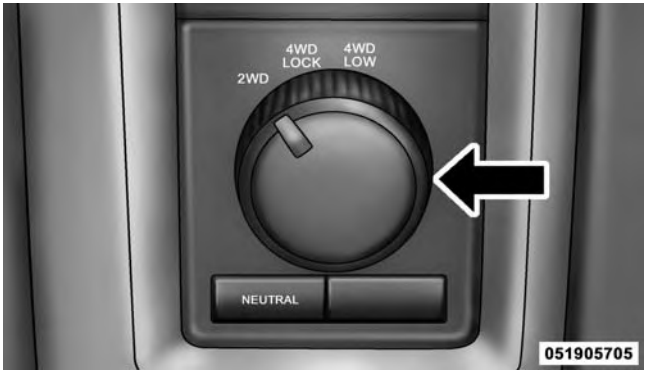

Transfer Case Switch (Four-Position)

This electronically shifted transfer case provides four mode positions:

- Two-wheel drive high range (2WD)
- Four-wheel drive lock range (4WD LOCK)
- Four-wheel drive low range (4WD LOW)
- Neutral (NEUTRAL)

This electronically shifted transfer case is designed to be driven in the two-wheel drive position (2WD) for normal street and highway conditions on dry, hard surfaced roads.

When additional traction is required, the transfer case 4WD LOCK and 4WD LOW positions can be used to maximize torque to the front driveshaft, forcing the front and rear wheels to rotate at the same speed. This is accomplished by rotating the 4WD Control Switch to the desired position. Refer to "Shifting Procedure" in this section for specific shifting instructions. The 4WD LOCK and 4WD LOW positions are designed for loose, slippery road surfaces only. Driving in the 4WD LOCK and 4WD LOW positions on dry hard surfaced roads may cause increased tire wear and damage to the driveline components.

NOTE: The transfer case NEUTRAL position is selected by pressing the recessed button located on the lower left hand corner of the 4WD Control Switch. The transfer case NEUTRAL position is to be used for recreational towing only. Refer to "Recreational Towing" in "Starting and Operating" for further information.

Transfer Case Position Indicator Lights

The Transfer Case Position Indicator Lights (4WD and 4LOW) are located in the instrument cluster and indicate the current and desired transfer case selection. When you select a different transfer case position, the indicator lights will do the following:

If All Shift Conditions Are Met:

1. The current position indicator light will turn OFF.
2. The selected position indicator light will flash until the transfer case completes the shift.
3. When the shift is complete, the indicator light for the selected position will stop flashing and remain ON.

If One Or More Shift Conditions Are Not Met:

1. The indicator light for the current position will remain ON.
2. The newly selected position indicator light will continue to flash.
3. The transfer case **will not** shift.

NOTE: Before retrying a selection, make certain that all the necessary requirements for selecting a new transfer case position have been met. To retry the selection, turn the control knob back to the current position, wait five seconds, and retry selection. To find the shift requirements, refer to the "Shifting Procedure" for your transfer case, located in this section.

The "SVC 4WD Warning Light" monitors the electronic shift four-wheel drive system. If this light remains on after engine start up or illuminates during driving, it means that the four-wheel drive system is not functioning properly and that service is required.

WARNING!

Always engage the parking brake when powering down the vehicle if the "SVC 4WD Warning Light" is illuminated. Not engaging the parking brake may allow the vehicle to roll, which may cause personal injury.

NOTE: Do not attempt to make a shift while only the front or rear wheels are spinning, as this can cause damage to driveline components.

When operating your vehicle in 4WD LOW, the engine speed is approximately three times that of the 2WD or 4WD LOCK positions at a given road speed. Take care not to overspeed the engine and do not exceed 25 mph (40 km/h).

Proper operation of four-wheel drive vehicles depends on tires of equal size, type and circumference on each wheel. Any difference in tire size can cause damage to the drivetrain.

Because four-wheel drive provides improved traction, there is a tendency to exceed safe turning and stopping speeds. Do not go faster than road conditions permit.

WARNING!

You or others could be injured or killed if you leave the vehicle unattended with the transfer case in the NEUTRAL position without first fully engaging the parking brake. The transfer case NEUTRAL position

(Continued)

WARNING! ***(Continued)***

disengages both the front and rear driveshafts from the powertrain and will allow the vehicle to move regardless of the transmission position. The parking brake should always be applied when the driver is not in the vehicle.

For additional information on the appropriate use of each transfer case mode position, see the information below:

2WD

Rear Wheel Drive High Range - This range is for normal street and highway driving on dry, hard surfaced roads.

4WD LOCK

Four-Wheel Drive Lock Range - This range maximizes torque to the front driveshaft, forcing the front and rear wheels to rotate at the same speed. This range provides additional traction for loose, slippery road surfaces only.

4WD LOW

Four-Wheel Drive Low Range - This range provides low speed four-wheel drive. It maximizes torque to the front driveshaft, forcing the front and rear wheels to rotate at the same speed. This range provides additional traction and maximum pulling power for loose, slippery road surfaces only. Do not exceed 25 mph (40 km/h).

N

Neutral - This range disengages both the front and rear driveshafts from the powertrain. To be used for flat towing behind another vehicle. Refer to “Recreational Towing” in “Starting and Operating” for further information.

Shifting Procedure

NOTE:

- If any of the requirements to select a new transfer case position have not been met, the transfer case will not shift. The position indicator light for the previous position will remain ON and the newly selected position indicator light will continue to flash until all the requirements for the selected position have been met. To retry a shift: return the control knob back to the original position, make certain all shift requirements have been met, wait five seconds and try the shift again.
- If all the requirements to select a new transfer case position have been met, the current position indicator light will turn OFF, the selected position indicator light will flash until the transfer case completes the shift. When the shift is complete, the position indicator light for the selected position will stop flashing and remain ON.

2WD To 4WD LOCK

Rotate the 4WD control switch to the desired position. Shifts between 2WD and 4WD LOCK can be done with the vehicle stopped or in motion. With the vehicle in motion, the transfer case will engage/disengage faster if you momentarily release the accelerator pedal after turning the control switch. If the vehicle is stopped, the ignition switch must be in the ON position with the engine either running or off. This shift cannot be completed if the ignition switch is in the ACC position.

NOTE: The four-wheel drive system will not allow shifts between 2WD/4WD LOCK if the front and/or rear wheels are spinning (no traction). In this situation, the selected position indicator light will flash and the original position indicator light will remain ON. At this time, reduce speed and stop spinning the wheels to complete the shift.

2WD Or 4WD LOCK To 4WD LOW

NOTE: When shifting into or out of 4WD LOW some gear noise may be heard. This noise is normal and is not detrimental to the vehicle or occupants.

Shifting can be performed with the vehicle rolling 2 to 3 mph (3 to 5 km/h) or completely stopped. You can use either of the following procedures:

Preferred Procedure

1. With the engine running, slow the vehicle to 2 to 3 mph (3 to 5 km/h).
2. Shift the transmission into NEUTRAL.
3. While still rolling, rotate the transfer case control switch to the desired position.
4. After the desired position indicator light is ON (not flashing), shift the transmission back into gear.

Alternate Procedure

1. Bring the vehicle to a complete stop.
2. With the ignition switch in the ON position and the engine running, shift the transmission into NEUTRAL.
3. Rotate the transfer case control switch to the desired position.
4. After the desired position indicator light is ON (not flashing), shift the transmission back into gear.

NOTE:

- If Steps 1 or 2 of either the Preferred or Alternate Procedure are not satisfied prior to attempting the shift, then the desired position indicator light will flash continuously while the original position indicator light is ON, until all requirements have been met.
- The ignition switch must be in the ON position for a shift to take place and for the position indicator lights to be operable. If the ignition switch is not in the ON position, the shift will not take place and no position indicator lights will be on or flashing.

Electronically Shifted Transfer Case (Five-Position Switch) – If Equipped

This is an electronic shift transfer case and is operated by the 4WD Control Switch (Transfer Case Switch), which is located on the instrument panel.

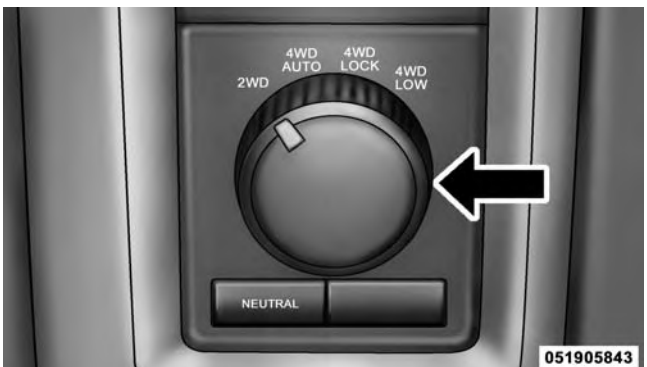

Transfer Case Switch (Five–Position)

This electronically shifted transfer case provides five mode positions:

- Two-wheel drive high range (2WD)
- Four-wheel drive automatic range (4WD AUTO)
- Four-wheel drive lock range (4WD LOCK)
- Four-wheel drive low range (4WD LOW)
- Neutral (NEUTRAL)

This electronically shifted transfer case is designed to be driven in the two–wheel drive position (2WD) or four-wheel drive position (4WD AUTO) for normal street and highway conditions on dry hard surfaced roads). Driving the vehicle in 2WD will have greater fuel economy benefits as the front axle is not engaged in 2WD.

For variable driving conditions, the 4WD AUTO mode can be used. In this mode, the front axle is engaged, but the vehicle's power is sent to the rear wheels. Four-wheel drive will be automatically engaged when the vehicle senses a loss of traction. Because the front axle is engaged, this mode will result in lower fuel economy than the 2WD mode.

When additional traction is required, the transfer case 4WD LOCK and 4WD LOW positions can be used to maximize torque to the front driveshaft, forcing the front and rear wheels to rotate at the same speed. This is accomplished by rotating the 4WD Control Switch to the desired position. Refer to "Shifting Procedure" for specific shifting instructions. The 4WD LOCK and 4WD LOW positions are designed for loose, slippery road surfaces only. Driving in the 4WD LOCK and 4WD LOW positions on dry hard surfaced roads may cause increased tire wear and damage to the driveline components.

NOTE: The transfer case NEUTRAL position is selected by depressing the recessed button located on the lower left hand corner of the 4WD Control Switch. The transfer case NEUTRAL position is to be used for recreational towing only. Refer to "Recreational Towing" in "Starting and Operating" for further information.

Transfer Case Position Indicator Lights

The Transfer Case Position Indicator Lights (4WD, 4LOW, and 4WD AUTO) are located in the instrument cluster and indicate the current and desired transfer case selection. When you select a different transfer case position, the indicator lights will do the following:

If All Shift Conditions Are Met:

1. The current position indicator light will turn OFF.
2. The selected position indicator light will flash until the transfer case completes the shift.
3. When the shift is complete, the indicator light for the selected position will stop flashing and remain ON.

If One Or More Shift Conditions Are Not Met:

1. The indicator light for the current position will remain ON.
2. The newly selected position indicator light will continue to flash.
3. The transfer case **will not** shift.

NOTE: Before retrying a selection, make certain that all the necessary requirements for selecting a new transfer case position have been met. To retry the selection, turn the control knob back to the current position, wait five seconds, and retry selection. To find the shift requirements, refer to the "Shifting Procedure" for your transfer case, located in this section.

The "SVC 4WD Warning Light" monitors the electronic shift four-wheel drive system. If this light remains on

after engine start up or illuminates during driving, it means that the four-wheel drive system is not functioning properly and that service is required.

WARNING!

Always engage the parking brake when powering down the vehicle if the "SVC 4WD Warning Light" is illuminated. Not engaging the parking brake may allow the vehicle to roll which may cause personal injury or death.

NOTE: Do not attempt to make a shift while only the front or rear wheels are spinning. This could cause damage to driveline components.

When operating your vehicle in 4WD LOW, the engine speed is approximately three times that of the 2WD, 4WD AUTO or 4WD LOCK positions at a given road speed. Take care not to overspeed the engine and do not exceed 25 mph (40 km/h).

Proper operation of four-wheel drive vehicles depends on tires of equal size, type and circumference on each wheel. Any difference in tire size can cause damage to the drivetrain.

Because four-wheel drive provides improved traction, there is a tendency to exceed safe turning and stopping speeds. Do not go faster than road conditions permit.

WARNING!

You or others could be injured or killed if you leave the vehicle unattended with the transfer case in the NEUTRAL position without first fully engaging the parking brake. The transfer case NEUTRAL position

(Continued)

WARNING! *(Continued)*

disengages both the front and rear driveshafts from the powertrain and will allow the vehicle to move regardless of the transmission position. The parking brake should always be applied when the driver is not in the vehicle.

For additional information on the appropriate use of each transfer case mode position, see the information below:

2WD

Rear-Wheel Drive High Range - This range is for normal street and highway driving on dry hard surfaced roads.

4WD AUTO

Four-Wheel Drive Auto Range - This range sends power to the rear wheels. The four–wheel drive system will be automatically engaged when the vehicle senses a loss of traction. Additional traction for varying road conditions.

4WD LOCK

Four-Wheel Drive Lock Range - This range maximizes torque to the front driveshaft, forcing the front and rear wheels to rotate at the same speed. Additional traction for loose, slippery road surfaces only.

4WD LOW

Four-Wheel Drive Low Range - This range provides low speed four-wheel drive. It maximizes torque to the front driveshaft , forcing the front and rear wheels to rotate at the same speed. This range provides additional traction and maximum pulling power for loose, slippery road surfaces only. Do not exceed 25 mph (40 km/h).

N

Neutral - This range disengages both the front and rear driveshafts from the powertrain. To be used for flat towing behind another vehicle. Refer to “Recreational Towing” in “Starting and Operating” for further information.

Shifting Procedure

NOTE:

- If any of the requirements to select a new transfer case position have not been met, the transfer case will not shift. The position indicator light for the previous position will remain ON and the newly selected position indicator light will continue to flash until all the requirements for the selected position have been met. To retry a shift: return the control knob back to the original position, make certain all shift requirements have been met, wait five seconds and try the shift again.
- If all the requirements to select a new transfer case position have been met, the current position indicator light will turn OFF, the selected position indicator light will flash until the transfer case completes the shift. When the shift is complete, the position indicator light for the selected position will stop flashing and remain ON.

Electronically Shifted Transfer Case (Five-Position Switch) – If Equipped

This is an electronic shift transfer case and is operated by the 4WD Control Switch (Transfer Case Switch), which is located on the instrument panel.

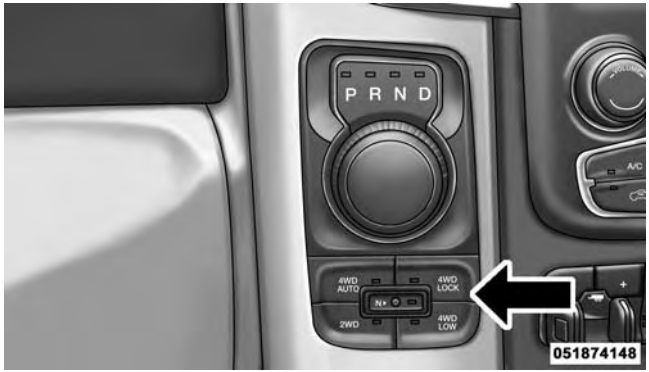

Transfer Case Switch (Five–Position)

This electronically shifted transfer case provides five mode positions:

- Two-wheel drive high range (2WD)
- Four-wheel drive automatic range (4WD AUTO)
- Four-wheel drive lock range (4WD LOCK)
- Four-wheel drive low range (4WD LOW)
- Neutral (NEUTRAL)

This electronically shifted transfer case is designed to be driven in the two–wheel drive position (2WD) or four-wheel drive position (4WD AUTO) for normal street and highway conditions on dry hard surfaced roads). Driving the vehicle in 2WD will have greater fuel economy benefits as the front axle is not engaged in 2WD.

For variable driving conditions, the 4WD AUTO mode can be used. In this mode, the front axle is engaged, but the vehicle's power is sent to the rear wheels. Four-wheel drive will be automatically engaged when the vehicle senses a loss of traction. Because the front axle is engaged, this mode will result in lower fuel economy than the 2WD mode.

When additional traction is required, the transfer case 4WD LOCK and 4WD LOW positions can be used to maximize torque to the front driveshaft, forcing the front

and rear wheels to rotate at the same speed. This is accomplished by rotating the 4WD Control Switch to the desired position. Refer to "Shifting Procedure" for specific shifting instructions. The 4WD LOCK and 4WD LOW positions are designed for loose, slippery road surfaces only. Driving in the 4WD LOCK and 4WD LOW positions on dry hard surfaced roads may cause increased tire wear and damage to the driveline components.

NOTE: The transfer case NEUTRAL position is selected by depressing the recessed button (with a ballpoint pen or similar object) located in the center of the 4WD Control Switch. The transfer case NEUTRAL position is to be used for recreational towing only. Refer to "Recreational Towing" in "Starting and Operating" for further information.

Transfer Case Position Indicator Lights

The Transfer Case Position Indicator Lights (4WD, 4LOW, and 4WD AUTO) are located in the instrument cluster and indicate the current and desired transfer case selection. When you select a different transfer case position, the indicator lights will do the following:

If All Shift Conditions Are Met:

1. The current position indicator light will turn OFF.
2. The selected position indicator light will flash until the transfer case completes the shift.
3. When the shift is complete, the indicator light for the selected position will stop flashing and remain ON.

If One Or More Shift Conditions Are Not Met:

1. The indicator light for the current position will remain ON.
2. The newly selected position indicator light will continue to flash.
3. The transfer case **will not** shift.

NOTE: Before retrying a selection, make certain that all the necessary requirements for selecting a new transfer case position have been met. To retry the selection, turn the control knob back to the current position, wait five seconds, and retry selection. To find the shift requirements, refer to the "Shifting Procedure" for your transfer case, located in this section.

The "SVC 4WD Warning Light" monitors the electronic shift four-wheel drive system. If this light remains on after engine start up or illuminates during driving, it means that the four-wheel drive system is not functioning properly and that service is required.

WARNING!

Always engage the parking brake when powering down the vehicle if the "SVC 4WD Warning Light" is illuminated. Not engaging the parking brake may allow the vehicle to roll which may cause personal injury or death.

NOTE: Do not attempt to make a shift while only the front or rear wheels are spinning. This could cause damage to driveline components.

When operating your vehicle in 4WD LOW, the engine speed is approximately three times that of the 2WD, 4WD AUTO or 4WD LOCK positions at a given road speed. Take care not to overspeed the engine and do not exceed 25 mph (40 km/h).

Proper operation of four-wheel drive vehicles depends on tires of equal size, type and circumference on each wheel. Any difference in tire size can cause damage to the drivetrain.

Because four-wheel drive provides improved traction, there is a tendency to exceed safe turning and stopping speeds. Do not go faster than road conditions permit.

WARNING!

You or others could be injured or killed if you leave the vehicle unattended with the transfer case in the NEUTRAL position without first fully engaging the parking brake. The transfer case NEUTRAL position disengages both the front and rear driveshafts from the powertrain and will allow the vehicle to move regardless of the transmission position. The parking brake should always be applied when the driver is not in the vehicle.

For additional information on the appropriate use of each transfer case mode position, see the information below:

2WD

Rear-Wheel Drive High Range - This range is for normal street and highway driving on dry hard surfaced roads.

4WD AUTO

Four-Wheel Drive Auto Range - This range sends power to the rear wheels. The four–wheel drive system will be automatically engaged when the vehicle senses a loss of traction. Additional traction for varying road conditions.

4WD LOCK

Four-Wheel Drive Lock Range - This range maximizes torque to the front driveshaft, forcing the front and rear wheels to rotate at the same speed. Additional traction for loose, slippery road surfaces only.

4WD LOW

Four-Wheel Drive Low Range - This range provides low speed four-wheel drive. It maximizes torque to the front driveshaft , forcing the front and rear wheels to rotate at the same speed. This range provides additional traction and maximum pulling power for loose, slippery road surfaces only. Do not exceed 25 mph (40 km/h).

N

Neutral - This range disengages both the front and rear driveshafts from the powertrain. To be used for flat towing behind another vehicle. Refer to “Recreational Towing” in “Starting and Operating” for further information.

Shifting Procedure

NOTE:

- If any of the requirements to select a new transfer case position have not been met, the transfer case will not shift. The position indicator light for the previous position will remain ON and the newly selected position indicator light will continue to flash until all the requirements for the selected position have been met.
- If all the requirements to select a new transfer case position have been met, the current position indicator light will turn OFF, the selected position indicator light will flash until the transfer case completes the shift. When the shift is complete, the position indicator light for the selected position will stop flashing and remain ON.

2WD To 4WD AUTO Or 4WD LOCK

Press the desired position on the 4WD Control Switch to shift the transfer case. Shifts between 2WD and 4WD AUTO and 4WD LOCK can be done with the vehicle stopped or in motion. With the vehicle in motion, the transfer case will engage/disengage faster if you momentarily release the accelerator pedal after turning the control switch. If the vehicle is stopped, the ignition switch must be in the ON position with the engine either running or OFF. This shift cannot be completed if the ignition switch is in the ACC position.

2WD Or 4WD AUTO Or 4WD LOCK To 4WD LOW

NOTE: When shifting into or out of 4WD LOW some gear noise may be heard. This noise is normal and is not detrimental to the vehicle or occupants.

Shifting can be performed with the vehicle rolling 2 to 3 mph (3 to 5 km/h) or completely stopped. Use either of the following procedures:

Preferred Procedure

1. With the engine running, slow the vehicle to 2 to 3 mph (3 to 5 km/h).
2. Shift the transmission into NEUTRAL.

3. While still rolling, press the desired position on the transfer case control switch.
4. After the desired position indicator light is ON (not flashing), shift the transmission back into gear.

Alternate Procedure

1. Bring the vehicle to complete stop.
2. With the ignition switch in the ON position and the engine running, shift the transmission into NEUTRAL.
3. Press the desired position on the transfer case control switch.
4. After the desired position indicator light is ON (not flashing), shift the transmission back into gear.

NOTE:

- If Steps 1 or 2 of either the Preferred or Alternate Procedure are not satisfied prior to attempting the shift or if they no longer are being met while the shift attempt is in process, the desired position indicator light will flash continuously while the original position indicator light is ON, until all requirements have been met.
- The ignition switch must be in the ON position for a shift to take place and for the position indicator lights to be operable. If the ignition switch is not in the ON position, then the shift will not take place and no position indicator lights will be on or flashing.

AIR SUSPENSION SYSTEM (1500 MODELS ONLY) — IF EQUIPPED

Description

The air suspension system provides full time load leveling capability along with the benefit of being able to adjust vehicle height by the push of a button.

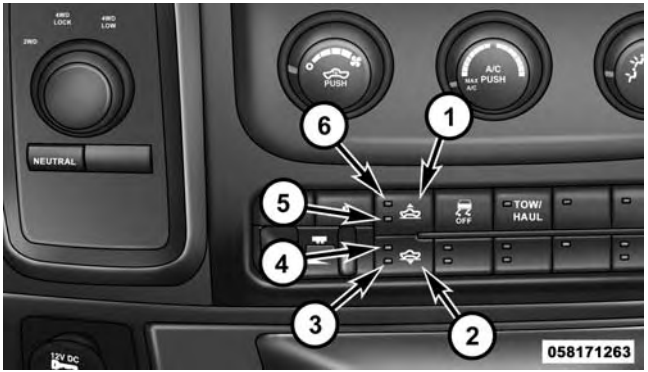

Air Suspension Switch

1 — Up Button
2 — Down Button
3 — Entry/Exit Mode Indicator Lamp (Customer selectable)

4 — Normal Ride Height Indicator Lamp (Customer selectable)
5 — Off-Road 1 Indicator Lamp (Customer selectable)
6 — Off-Road 2 Indicator Lamp (Customer selectable)

NOTE: The vehicle will automatically enter Aero Mode when the vehicle speed remains between 62 mph (100 km/h) and 66 mph (106 km/h) for greater than 20 seconds or if the vehicle speed exceeds 66 mph (106 km/h).

- **Normal Ride Height (NRH)** – This is the standard position of the suspension and is meant for normal driving.
- **Off-Road 1 (OR1) (Raises the vehicle approximately 1 in (26 mm)** – This position should be the primary position for all off-road driving until Off Road 2 (OR2) is needed. A smoother and more comfortable ride will result. To enter OR1, press the "Up" button once from the NRH position while the vehicle speed is below 35 mph (56 km/h). When in the OR1 position, if the vehicle speed remains between 40 mph (64 km/h) and 50 mph (80 km/h) for greater than 20 seconds or if the vehicle speed exceeds 50 mph (80 km/h), the vehicle will be automatically lowered to NRH. Off-Road 1 may not be available due to vehicle payload, an EVIC message will be displayed when this occurs. Refer to "Electronic Vehicle Information Center (EVIC)" in "Understanding Your Instrument Panel" for further information.
- **Off-Road 2 (OR2) (Raises the vehicle approximately 2 in (51 mm)** – This position is intended for off-roading use only where maximum ground clearance is required. To enter OR2, press the "Up" button twice from the NRH position or once from the OR1 position while vehicle speed is below 20 mph (32 km/h). While in OR2, if the vehicle speed exceeds 25 mph (40 km/h) the vehicle height will be automatically lowered to

OR1. Off-Road 2 may not be available due to vehicle payload, an EVIC message will be displayed when this occurs. Refer to "Electronic Vehicle Information Center (EVIC)" in "Understanding Your Instrument Panel" for further information.

- If the vehicle is in OFFROAD1 or OFFROAD2 setting, be aware of your surroundings, you may not have the clearance required for certain areas and vehicle damage may occur.

- **Aero Mode (Lowers the vehicle approximately .6 in (15 mm) – 1500 Models Only** – This position provides improved aerodynamics by lowering the vehicle. The vehicle will automatically enter Aero Mode when the vehicle speed remains between 62 mph (100 km/h) and 66 mph (106 km/h) for greater than 20 seconds or if the vehicle speed exceeds 66 mph (106 km/h). The vehicle will return to NRH from Aero Mode if the vehicle speed remains between 30 mph (48 km/h) and 35 mph (56 km/h) for greater than 20 seconds or if the vehicle speed falls below 30 mph (48 km/h).

NOTE: Aero Mode may be disabled through vehicle settings in the Electronic Vehicle Information Center (EVIC) or in the Uconnect® Access 8.4 Radio (If Equipped). Refer to "Electronic Vehicle Information Center (EVIC)" in "Understanding Your Instrument Panel" or "Uconnect® Access Settings" in "Understanding Your Instrument Panel" for further information.

- **Entry/Exit Mode (Lowers the vehicle approximately 2 in (51 mm)** – This position lowers the vehicle for easier passenger entry and exit as well as lowering the rear of the vehicle for easier loading and unloading of cargo. To enter Entry/Exit Mode, press the "Down" button once from the NRH while the vehicle speed is below 33 mph (53 km/h). Once the vehicle speed goes below 15 mph (24 km/h) the vehicle height will begin to lower. If the vehicle speed remains between 15 mph

(24 km/h) and 25 mph (40 km/h) for greater than 60 seconds, or the vehicle speed exceeds 25 mph (40 km/h) the Entry/Exit change will be cancelled. To return to Normal Height Mode, press the "Up" button once while in Entry/Exit or drive the vehicle over 15 mph (24 km/h). Entry/Exit mode may not be available due to vehicle payload, an EVIC message will be displayed when this occurs. Refer to "Electronic Vehicle Information Center (EVIC)" in "Understanding Your Instrument Panel" for further information.

NOTE: Entry/Exit mode may be achieved using your key fob for easier entry/loading. Refer to "A Word About Your Keys" in "Things To Know Before Starting Your Vehicle" for further information.

- When in ENTRY/EXIT setting, be aware of your surroundings, you may not have the clearance required for certain areas and vehicle damage may occur.

The system requires that the ignition be in ON/RUN position or the engine running for all user requested changes. When lowering the vehicle all of the doors, must be closed. If a door is opened at any time while the vehicle is lowering the change will not be completed until the open door(s) is closed.

This system uses a lifting and lowering pattern which keeps the headlights from incorrectly shining into oncoming traffic. When raising the vehicle, the rear of the vehicle will move up first and then the front. When lowering the vehicle, the front will move down first and then the rear.

After the engine is turned off, it may be noticed that the air suspension system operates briefly, this is normal. The system is correcting the position of the vehicle to ensure a proper appearance.

To assist with changing a spare tire, the air suspension system has a feature which allows the automatic leveling

to be disabled. Refer to “Electronic Vehicle Information Center (EVIC)” in “Understanding Your Instrument Panel” for further information.

NOTE: If equipped with a touch screen radio all enabling/disabling of air suspension features must be done through the radio. Refer to “Uconnect® Access Settings” in “Understanding Your Instrument Panel” for further information.

WARNING!

The air suspension system uses a high pressure volume of air to operate the system. To avoid personal injury or damage to the system, see your authorized dealer for service.

Air Suspension Modes

The Air Suspension system has multiple modes to protect the system in unique situations:

Tire/Jack Mode

To assist with changing a spare tire, the air suspension system has a feature which allows the automatic leveling to be disabled. Refer to “Electronic Vehicle Information Center (EVIC)” in “Understanding Your Instrument Panel” for further information.

NOTE: This mode is intended to be enabled with engine running.

Transport Mode

To assist with flat bed towing, the air suspension system has a feature which will put the vehicle into Entry/Exit height and disable the automatic load leveling system. Refer to “Electronic Vehicle Information Center (EVIC)” in “Understanding Your Instrument Panel” for further information.

NOTE: This mode is intended to be enabled with engine running.

Wheel Alignment Mode

Before performing a wheel alignment this mode must be enabled. Refer to "Electronic Vehicle Information Center (EVIC)" in "Understanding Your Instrument Panel" for further information.

NOTE: This mode is intended to be enabled with engine running.

Protection Mode

In order to "protect" the air suspension system, the vehicle will enter Protection Mode when load leveling cannot be achieved. Some driving may be required to clear the protection mode telltale in the EVIC. Refer to "Electronic Vehicle Information Center (EVIC)" in "Understanding Your Instrument Panel" for further information.

NOTE: If equipped with a touch screen radio all enabling/disabling of air suspension features must be done through the radio. Refer to "Uconnect® Access Settings" in "Understanding Your Instrument Panel" for further information.

Electronic Vehicle Information Center (EVIC) Display Messages

When the appropriate conditions exist, a message will appear in the EVIC display. Refer to "Electronic Vehicle Information Center (EVIC)" in "Understanding Your Instrument Panel" for further information.

An audible chime will be heard whenever a system error has been detected.

Operation

The indicator lamps 3 through 6 will illuminate to show the current position of the vehicle. Flashing indicator lamps will show a position which the system is working to achieve. When raising, if multiple indicator lamps are flashing, the highest flashing indicator lamp is the position the system is working to achieve. When lowering, if multiple indicators are flashing, the lowest solid indicator lamp is the position the system is working to achieve.

Pressing the "UP" button once will move the suspension one position higher from the current position, assuming all conditions are met (i.e. key in ON/RUN position, engine running, speed below threshold, etc). The "UP" button can be pressed multiple times, each press will raise the requested level by one position up to a maximum position of OR2 or the highest position allowed based on current conditions (i.e. vehicle speed, etc).

Pressing the "DOWN" button once will move the suspension one position lower from the current level, assuming all conditions are met (i.e. key in ON/RUN position, engine running, doors closed, speed below threshold, etc). The "DOWN" button can be pressed multiple times, each press will lower the requested level by one position down to a minimum of Entry/Exit Mode or the lowest position allowed based on current conditions (i.e. vehicle speed, etc.)

Automatic height changes will occur based on vehicle speed and the current vehicle height. The indicator lamps and EVIC messages will operate the same for automatic changes and user requested changes.

- Off-Road 2 (OR2) – Indicator lamps 3, 4, 5, and 6 will be illuminated when the vehicle is in OR2.
- Off-Road 1 (OR1) – Indicator lamps 3,4 and 5 will be illuminated when the vehicle is in OR1.

- Normal Ride Height (NRH)/Aero Mode – Indicator lamps 3 and 4 will be illuminated when the vehicle is in this position.
- Entry/Exit Mode – Indicator lamp 3 will be illuminated when the vehicle is in Entry Exit Mode. Entry/Exit mode can be requested up to 33 mph (53 km/h). If vehicle speed is reduced to, and kept below, 15 mph (24 km/h) indicator lamp 4 will flash and indicator lamp 3 will remain solid until Entry/Exit Mode is achieved at which point indicator lamp 4 will turn off.
- Transport Mode – No indicator lamps will be illuminated. Transport Mode is disabled by driving the vehicle.
- Tire/Jack Mode – indicator lamps 3 and 6 will be illuminated. Tire/Jack Mode is disabled by driving the vehicle.
- Wheel Alignment Mode – indicator lamps 3 and 4 will be illuminated. Wheel Alignment Mode is disabled by driving the vehicle.

AIR SUSPENSION SYSTEM (2500/3500 MODELS ONLY) — IF EQUIPPED

Description

The air suspension system is a rear leveling ride height system. The main purpose of this system is to maintain the truck's rear ride height level.

Rear Leveling Ride Height Switch

Normal Ride Height (NRH) – This is the standard position of the suspension and is meant for normal driving.

Trailer Mode (Lowers the vehicle approximately 1 in (25 mm) – This position will lower the suspension system to connect and level the trailer. The trailer button will blink continuously until trailer height has been achieved.

The system requires that the ignition be in ON/RUN position or the engine running for all user requested changes.

After the engine is turned off, it may be noticed that the air suspension system operates briefly, this is normal. The system is correcting the position of the vehicle to ensure a proper appearance.

To assist with changing a spare tire, the air suspension system has a feature which allows the automatic leveling to be disabled. Refer to “Electronic Vehicle Information Center (EVIC)” in “Understanding Your Instrument Panel” for further information.

NOTE: If equipped with a touch screen radio all enabling/disabling of air suspension features must be done through the radio. Refer to "Uconnect® Access Settings" in "Understanding Your Instrument Panel" for further information.

WARNING!

The air suspension system uses a high pressure volume of air to operate the system. To avoid personal injury or damage to the system, see your authorized dealer for service.

Air Suspension Modes

The Air Suspension system has multiple modes to protect the system in unique situations:

Tire/Jack Mode

To assist with changing a spare tire, the air suspension system has a feature which allows the automatic leveling to be disabled. This mode is intended to be used with engine running. Refer to "Electronic Vehicle Information Center (EVIC)" in "Understanding Your Instrument Panel" for further information.

NOTE: This mode is intended to be enabled with engine running.

Transport Mode

To assist with flat bed towing, the air suspension system has a feature which will put the vehicle below Normal Ride Height (NRH) and disable the automatic load leveling system. This mode is intended to be used with engine running. Refer to "Electronic Vehicle Information Center (EVIC)" in "Understanding Your Instrument Panel" for further information.

NOTE: This mode is intended to be enabled with engine running.

Wheel Alignment Mode

Before performing a wheel alignment this mode must be enabled. Refer to “Electronic Vehicle Information Center (EVIC)” in “Understanding Your Instrument Panel” for further information.

NOTE: This mode is intended to be enabled with engine running.

Protection Mode

In order to “protect” the air suspension system, the vehicle will enter Protection Mode when load leveling cannot be achieved. Some driving may be required to clear the protection mode telltale in the EVIC. Refer to “Electronic Vehicle Information Center (EVIC)” in “Understanding Your Instrument Panel” for further information.

NOTE: If equipped with a touch screen radio all enabling/disabling of air suspension features must be done through the radio. Refer to “Uconnect® Access Settings” in “Understanding Your Instrument Panel” for further information.

Electronic Vehicle Information Center (EVIC) Display Messages

When the appropriate conditions exist, a message will appear in the EVIC display. Refer to “Electronic Vehicle Information Center (EVIC)” in “Understanding Your Instrument Panel” for further information.

An audible chime will be heard whenever a system error has been detected.

Operation

Pushing the Trailer Mode button once, while at Normal Ride Height (NRH) will lower the vehicle to trailer level.

NOTE: The LED will continuously blink until vehicle trailer level that been achieved.

Pushing the Trailer Mode again will raise the vehicle to Normal Ride Height (NRH).

NOTE: The LED will continuously blink until Normal Ride Height (NRH) has been achieved.

- Transport Mode – No indicator lamps will be illuminated. Transport Mode is disabled by driving the vehicle.
- Tire/Jack Mode – The LED will be illuminated. Tire/Jack Mode is disabled by driving the vehicle.
- Wheel Alignment Mode – The LED will be illuminated. Wheel Alignment Mode is disabled by driving the vehicle.

AXLE LOCKER SYSTEM (POWER WAGON MODELS ONLY) — IF EQUIPPED

This vehicle is equipped with electronically locking front and rear differentials. These differentials, when engaged, mechanically lock together the axle shafts forcing the wheels to spin at an equal rate. This allows the vehicle to maintain its momentum and prevents it from becoming stuck. The locking front and rear differentials should only be engaged during low-speed, extreme off-road situations where one wheel is likely to not be in contact with the ground. It is not recommended to drive the vehicle with the differentials locked on pavement due to the reduced ability to turn and speed limitations.

CAUTION!

- **Do not lock the front or rear axle on hard surfaced roads. The ability to steer the vehicle is reduced and damage to the drivetrain may occur when the axles are locked on hard surfaced roads.**
- **Do not try to lock the rear axle if the vehicle is stuck and the tires are spinning. You can damage drivetrain components. Lock the rear axle before attempting situations or navigating terrain, which could possibly cause the vehicle to become stuck.**

The locking axles are controlled by the axle locker switch.

The switch has three positions, AXLE UNLOCK, REAR LOCK, and FRONT/REAR LOCK. Under normal driving conditions, the switch should be left in the AXLE UNLOCK position. In the AXLE UNLOCK position, the front and rear axles are unlocked. In the REAR LOCK position, the rear axle is locked. In the FRONT/REAR LOCK position, the front and rear axles are locked.

NOTE: Even when the axles are in the AXLE UNLOCK position, the limited slip differential in the rear axle still provides torque biasing capability for moderate low traction environments.

During the command to lock the axle, the indicator light will flash until the axle is locked. After the lock command has been successfully executed, the light will remain on solid.

To lock the rear axle, place the vehicle in 4LO. Refer to “Four Wheel Drive Operation” in “Starting and Operating” for further information. Move the axle locker switch position to REAR LOCK while traveling less than 3 mph (5 km/h). The RR indicator light will remain on when the rear axle is locked.

NOTE: Left to right wheel speed difference may be necessary to allow the axle to fully lock. If the indicator light is flashing after placing the switch in the REAR LOCK or FRONT/REAR LOCK position, drive the vehicle in a turn or on loose gravel to expedite the locking action.

WARNING!

Do not use the locked axle position for normal driving. A locked front axle is intended for off-road driving only. Locking the front axle during on-road driving will reduce the steering ability. This could cause a collision and you may be seriously injured.

To lock the front axle; move the axle locker switch to FRONT/REAR LOCK while traveling less than 3 mph (5 km/h). The indicator light will be solid when the front axle is locked.

NOTE: The rear axle must be locked before the front axle will lock.

To unlock the front axle; move the axle locker switch to REAR LOCK. The FRONT/REAR LOCK indicator light will go out when the axle is unlocked.

NOTE: The axle lockers could be torque locked due to side to side loads on the axle. Driving slowly while turning the steering wheel from a left hand turn to a right hand turn or driving in REVERSE for a short distance may be required to release the torque lock and unlock the axles.

To unlock the rear axle; move the axle locker switch to AXLE UNLOCK. The REAR LOCK indicator light will go out when the rear axle is unlocked.

STABILIZER/SWAY BAR SYSTEM — POWER WAGON ONLY

Your vehicle is equipped with an electronic disconnecting stabilizer/sway bar. This system allows greater front suspension travel in off-road situations.

Due to the use of taller springs, this vehicle has an increased ride height of approximately 1.9 in (48.3 mm) in the front and 1.5 in (38.1 mm) in the rear. A major advantage to increasing ride height is the positive effect it has on approach/departure and break over angles.

This system is controlled by the electronic control sway bar switch located on the instrument panel.

1 — On Road
2 — Off Road

The switch has two positions; On-Road and Off-Road. The system is normally in the On-Road mode, indicated by a solid green light. The stabilizer/sway bar should remain in the On-Road mode during normal driving conditions.

WARNING!

Do not disconnect the stabilizer bar and drive on hard surfaced roads or at speeds above 18 mph (29 km/h), you may lose control of the vehicle, which could result in serious injury or death. The front stabilizer bar enhances vehicle stability and is necessary for maintaining control of the vehicle. The system monitors vehicle speed and will attempt to reconnect the stabilizer bar at speeds over 18 mph (29 km/h). This is indicated by a flashing off road light and solid on road light. Once vehicle speed is reduced below 14 mph (22 km/h), the system will attempt to return to the Off-Road mode.

To disconnect the stabilizer/sway bar, shift to either 4HI or 4LO as shown in "Four Wheel Drive Operation" and press the right hand Off Road stabilizer/sway bar button to obtain the Off-Road position. The amber indicator light will flash until the stabilizer/sway bar has been fully disconnected.

NOTE: The stabilizer/sway bar may be torque locked due to left and right suspension height differences. This condition is due to driving surface differences or vehicle loading. In order for the stabilizer/sway bar to disconnect/reconnect, the right and left halves of the bar must be aligned. This alignment may require that the vehicle be driven onto level ground or rocked from side to side.

To return to the On-Road mode; press the left hand On Road stabilizer/sway bar button.

WARNING!

If the stabilizer/sway bar will not return to On-Road mode, vehicle stability is greatly reduced. Do not attempt to drive the vehicle over 18 mph (29 km/h). Driving faster than 18 mph (29 km/h) may cause loss of control of the vehicle, which could result in serious injury or death. Contact your local service center for assistance.

SAFE OFF-ROAD DRIVING — POWER WAGON ONLY

Off-Road Driving Tips And Vehicle Characteristics

Your vehicle has excellent on and off-road capabilities. These off-road capabilities will allow you to explore those wilderness trails where few travel, providing a source of exciting and satisfying recreation. Before you venture out, you should contact your local governmental agency to determine the designated off-road vehicle (ORV) trails or recreation areas. You should always tread lightly and only use established roads, trails or ORV recreational areas. The National Forest Service, Bureau of Land Management or local Department of Natural Resources are a wealth of information and usually have maps with marked trails.

Skid Plates And Underbody Protection

Steel skid plates protect the major driveline components of the truck including the fuel tank, transfer case and steering damper. In addition, this vehicle is equipped with boxed cross members and fore/aft rails. This additional protection allows the vehicle to be utilized in severe off-road situations that would be considered impassable by a normal truck.

Ramp Travel Index (RTI)

The ramp travel index is the distance, in inches, that you can drive your vehicle with one wheel on a 20-degree

ramp without lifting any other wheel off the ground. This distance up the ramp divided by the wheelbase of the vehicle and multiplied by 1,000 is the RTI. This vehicle has an RTI of 655, which means you can articulate one front wheel 32 inches in the air while the other three wheels remain in contact with the ground.

Water Fording Characteristics

Water fording characteristic is the vehicle's ability to cross a body of still water, where the powertrain and drivetrain are safe from water ingestion. This vehicle has high water fording characteristics with the ability to cross a pool of water, without stopping, 24 inches deep at a maximum speed of 10 mph (16 km/h) and a pool of water 30 inches deep at a maximum speed of 5 mph (8 km/h), both with an entrance ramp angle of 1.3 degrees.

CAUTION!

The door sill height is 25 inches. Water may intrude into the interior of the vehicle at greater depths.

Simultaneous Brake And Throttle Operation

Many off-road driving conditions require the simultaneous use of the brake and throttle (two footed driving). When climbing rocks, logs, or other stepped objects, using light brake pressure with light throttle will keep the vehicle from jerking or lurching. This technique is also used when you need to stop and restart a vehicle on a steep incline.

The Basics Of Off-Road Driving

You will encounter many types of terrain driving off-road. You should be familiar with the terrain and area before proceeding. There are many types of surface conditions: hard packed dirt, gravel, rocks, grass, sand,

mud, snow and ice. Every surface has a different effect on your vehicle's steering, handling and traction. Controlling your vehicle is one of the keys to successful off-road driving, so always keep a firm grip on the steering wheel and maintain a good driving posture. Avoid sudden accelerations, turns or braking. In most cases there are no road signs, posted speed limits or signal lights. Therefore you will need to use your own good judgment on what is safe and what isn't. When on a trail you should always be looking ahead for surface obstacles and changes in terrain. The key is to plan your future driving route while remembering what you are currently driving over.

CAUTION!

Never park your vehicle over dry grass or other combustible materials. The heat from your vehicle exhaust system could cause a fire.

WARNING!

Always wear your seat belt and firmly tie down cargo. Unsecured cargo can become projectiles in an off-road situation.

When To Use Low Range

When driving off-road, shift into 4L (Low Range) for additional traction or to improve handling and control on slippery or difficult terrain. Due to the lower gearing, low range will allow the engine to operate in a higher power range. This will allow you to idle over obstacles and down hills, with improved control and less effort. Also, use 4L (Low Range) in rain, ice, snow, mud, sand, to get heavy loads rolling, improve traction, or whenever 4H (High Range) traction will not do the job.

Driving In Snow, Mud And Sand

There is a drastic reduction in traction when driving in snow, mud or sand. The vehicle will be less responsive to steering, acceleration and braking inputs. Therefore you should accelerate slowly, leave greater stopping distances and avoid abrupt vehicle maneuvers. You want to keep a slow constant steady pace. The key is to maintain the vehicle's momentum.

- **Snow** – In heavy snow or for additional control and traction at slower speeds, shift the transmission to a low gear and shift the transfer case to 4L (Low Range) if necessary. Do not shift to a lower gear than necessary to maintain headway. Over-revving the engine can spin the wheels and traction will be lost. If you start to slow to a stop, try turning your steering wheel no more than a ¼ turn quickly back and forth, while still applying throttle. This will allow the tires to get a fresh "bite" and help maintain your momentum.

CAUTION!

On icy or slippery roads, do not downshift at high engine RPMs or vehicle speeds because engine braking may cause skidding and loss of control.

- **Mud** – Deep mud creates a great deal of suction around the tires and is very difficult to get through. You should use 4L (Low Range) with a gear low enough to maintain your momentum without shifting. If you start to slow to a stop, try turning your steering wheel no more than a ¼ turn quickly back and forth for additional traction. Mud holes pose an increased threat of vehicle damage and getting stuck. They are normally full of debris from previous vehicles getting stuck. As a good practice before entering any mud hole, get out and determine how deep it is, if there are any hidden obstacles and if the vehicle can be safely recovered if stuck.

- **Sand** – Soft sand is very difficult to travel through with full tire pressure. When crossing soft sandy spots in a trail maintain your vehicle's momentum and do not stop. The key to driving in soft sand using the appropriate tire pressure, accelerating slowly, avoiding abrupt maneuvers and maintaining the vehicle's momentum. If you are going to be driving on large soft sandy areas or dunes, reduce your tire pressure to a minimum of 15 psi (103 kPa) to allow for a greater tire surface area. Reduced tire pressure will drastically improve your traction and handling, while driving on the soft sand, but you must return the tires to normal air pressure before driving on pavement or other hard surfaces. Be sure you have a way to air the tires back up prior to reducing the pressure.

CAUTION!

Reduced tire pressures may cause tire unseating and total loss of air pressure. To reduce the risk of tire unseating, while at a reduced tire pressure, reduce your speed and avoid sharp turns or abrupt maneuvers.

Crossing Obstacles (Rocks And Other High Points)

While driving off road, you will encounter many types of terrain. These varying types of terrain bring different types of obstacles. Before proceeding review the path ahead to determine the correct approach and your ability to safely recover the vehicle if something goes wrong. Keeping a firm grip on the steering wheel, bring the vehicle to a complete stop and then inch the vehicle forward until it makes contact with the object. Apply the throttle lightly while holding a light brake pressure and ease the vehicle up and over the object.

WARNING!

Crossing obstacles can cause abrupt steering system loading which could cause you to loose control of your vehicle.

Using A Spotter

There are many times where it is hard to see the obstacle or determine the correct path. Determining the correct path can be extremely difficult when you are confronting many obstacles. In these cases have someone guide you over, through, or around the obstacle. Have the person stand a safe distance in front of you where they can see the obstacle, watch your tires and undercarriage, and guide you through.

Crossing Large Rocks

When approaching large rocks, choose a path which ensures you drive over the largest with your tires. This will lift your undercarriage over the obstacle. The tread of the tire is tougher and thicker than the side wall and is designed to take the abuse. Always look ahead and make every effort to cross the large rocks with your tires.

CAUTION!

- **Never attempt to straddle a rock that is large enough to strike your axles or undercarriage.**
- **Never attempt to drive over a rock which is large enough to contact the door sills.**

Crossing A Ravine, Gully, Ditch, Washout Or Rut

When crossing a ravine, gully, ditch, washout or a large rut, the angled approach is the key to maintaining your vehicle's mobility. Approach these obstacles at a 45-degree angle and let each tire go through the obstacle independently. You need to use caution when crossing large obstacles with steep sides. Do not attempt to cross any large obstacle with steep sides at an angle great

enough to put the vehicle at risk of a rollover. If you get caught in a rut, dig a small trench to the right or left at a 45-degree angle ahead of the front tires. Use the removed dirt to fill the rut ahead of the turnout you just created. You should now be able to drive out following the trench you just created at a 45-degree angle.

WARNING!

There is an increased risk of rollover when crossing an obstacle, at any angle, with steep sides.

Crossing Logs

To cross a log, approach it at a slight angle (approximately 10 to 15 degrees). This allows one front tire to be on top of the log while the other just starts to climb the log. While climbing the log, modulate your brake and accelerator to avoid spinning the log out from under your tires. Then ease the vehicle off the log using your brakes.

CAUTION!

Do not attempt to cross a log with a greater diameter than the running ground clearance or the vehicle will become high centered.

Getting High Centered

If you get hung up or high centered on an object, get out of the vehicle and try to determine what the vehicle is hung up on, where it is contacting the underbody and what is the best direction to recover the vehicle. Depending on what you are in contact with, jack the vehicle up and place a few rocks under the tires so the weight is off of the high point when you let the vehicle down. You can also try rocking the vehicle or winching the vehicle off the object.

CAUTION!

Winching or rocking the vehicle off hard objects increases the risk of underbody damage.

Hill Climbing

Hill climbing requires good judgment and a good understanding of your abilities and your vehicle's limitations. Hills can cause serious problems. Some are just too steep to climb and should not be attempted. You should always feel confident with the vehicle and your abilities. You should always climb hills straight up and down. Never attempt to climb a hill on an angle.

- **Before Climbing A Steep Hill** – As you approach a hill consider its grade or steepness. Determine if it is too steep. Look to see what the traction is on the hill side trail. Is the trail straight up and down? What is on top and the other side? Are there ruts, rocks, branches or other obstacles on the path? Can you safely recover the vehicle if something goes wrong? If everything looks good and you feel confident, then change transmission into a lower gear, shift the transfer case into 4L (Low) and proceed with caution. You should use first gear and 4L (Low Range) for very steep hills.
- **Driving Up Hill** – Once you have determined your ability to proceed and have shifted into the appropriate gear, line your vehicle up for the straightest possible run. Accelerate with an easy constant throttle and apply more power as you start up the hill. Do not race forward into a steep grade, the abrupt change of grade could cause you to lose control. If the front end begins to bounce, ease off the throttle slightly to bring all four tires back on the ground. As you approach the crest of the hill ease off the throttle and slowly proceed over the top. If the wheels start to slip as you approach the crest of a hill, ease off the accelerator and maintain headway by turning the steering wheel no more than a ¼ turn quickly back and forth. This will provide a

fresh "bite" into the surface and will usually provide enough traction to complete the climb. If you do not make it to the top, place the vehicle in REVERSE and back straight down the grade using engine resistance along with the vehicle brakes.

WARNING!

Never attempt to climb a hill at an angle or turn around on a steep grade. Driving across an incline increases the risk of a roll over, which may result in severe injury or death.

- **Driving Down Hill** – Before driving down a steep hill you need to determine if it is too steep for a safe descent. What is the surface traction? Is the grade too steep to maintain a slow controlled descent? Are there obstacles? Is it a straight descent? Is there plenty of distance at the base of the hill to regain control if the vehicle descends too fast? If you feel confident in your ability to proceed then make sure you are in 4L (Low Range) with the transmission in first gear (manually select first gear on automatic transmissions) and proceed with caution. Allow engine braking to control the descent and apply your brakes if necessary, but do not allow the tires to lock.

WARNING!

Do not descend a steep grade in NEUTRAL. Use vehicle brakes in conjunction with engine braking. Descending a grade too fast could cause you to lose control and be seriously injured or killed.

- **Driving Across An Incline** – If at all possible avoid driving across an incline. If it is necessary, know your vehicle's abilities. Driving across an incline places more weight on the down hill wheels, which increases the possibilities of a down hill slide or rollover. Make sure the surface has good traction with firm and stable

soils. If possible transverse the incline at an angle heading slightly up or down.

WARNING!

Driving across an incline increases the risk of a rollover , which may result in severe injury.

- **If You Stall Or Begin To Lose Headway** – If you stall or begin to lose headway while climbing a steep hill, allow your vehicle to come to a stop and immediately apply the brake. Restart the engine and shift into REVERSE. Back slowly down the hill allowing the compression braking of the engine and transmission to help regulate your speed. If the brakes are required to control vehicle speed, apply them lightly and avoid locking or skidding the tires.

WARNING!

If the engine stalls or you lose headway or cannot make it to the top of a steep hill or grade, never attempt to turn around. To do so may result in tipping and rolling the vehicle, which may result in severe injury. Always back carefully straight down a hill in REVERSE. Never back down a hill in NEUTRAL using only the vehicle brakes. Never drive diagonally across a hill, always drive straight up or down.

Driving Through Water

Extreme care should be taken crossing any type of water. Water crossings should be avoided if possible and only be attempted when necessary, in a safe responsible manner. You should only drive through areas which are designated and approved. You should tread lightly and

avoid damage to the environment. You should know your vehicle's abilities and be able to recover it if something goes wrong. You should never stop or shut a vehicle off when crossing deep water unless you ingested water into the engine air intake. If the engine stalls do not attempt to restart it. Determine if it has ingested water first. The key to any crossing is low and slow. You want to use first gear in 4L (Low Range) and proceed very slowly with a constant slow speed (3-5 mph [5–8 km/h] maximum) and light throttle. Keep the vehicle moving; do not try to accelerate through the crossing. After crossing any water higher than the bottom of the axle differentials, you should inspect all of the vehicle fluids for signs of water ingestion.

CAUTION!

Water ingestion into the axles, transmission, transfer case, engine or vehicle interior can occur if you drive too fast or through too deep of water. Water can cause permanent damage to engine, driveline or other vehicle components and your brakes will be less effective once wet and/or muddy.

- **Before You Cross Any Type Of Water** – As you approach any type of water you need to determine if you can cross it safely and responsibly. If necessary, get out and walk through the water or probe it with a stick. You need to be sure of its depth, approach angle, current and bottom condition. Be careful of murky or muddy waters, check for hidden obstacles. Make sure you will not be intruding on any wildlife and you can recover the vehicle if necessary. The key to a safe

crossing is the water depth, current and bottom conditions. On soft bottoms the vehicle will sink in, effectively increasing the water level on the vehicle. Be sure to consider this when determining the depth and the ability to safely cross.

- **Crossing Puddles, Pools, Flooded Areas Or Other Standing Water** – Puddles, pools, flooded or other standing water areas normally contain murky or muddy waters. These water types normally contain hidden obstacles and make it difficult to determine an accurate water depth, approach angle, and bottom condition. Murky or muddy water holes are where you want to hook up tow straps prior to entering. This makes for a faster, cleaner and easier vehicle recovery. If you are able to determine you can safely cross, than proceed using the low and slow method.

CAUTION!

Muddy waters can reduce the cooling system effectiveness by depositing debris onto the radiator.

- **Crossing Ditches, Streams, Shallow Rivers Or Other Flowing Water** – Flowing water can be extremely dangerous. Never attempt to cross a fast running stream or river even in shallow water. Fast moving water can easily push your vehicle downstream sweeping it out of control. Even in very shallow water, a high current can still wash the dirt out from around your tires putting you and your vehicle in jeopardy. There is still a high risk of personal injury and vehicle damage with slower water currents in depths greater than the vehicle's running ground clearance. You should never attempt to cross flowing water which is deeper than the vehicle's running ground clearance. Even the slowest current can push the heaviest vehicle

downstream out of control if the water is deep enough to push on the large surface area of the vehicle's body. Before you proceed determine the speed of the current, the water's depth, approach angle, bottom condition and if there are any obstacles, then cross at an angle heading slightly upstream using the low and slow technique.

WARNING!

Never drive through fast moving deep water. It can push your vehicle downstream, sweeping it out of control. This could put you and your passengers at risk of injury or drowning.

Airing Down For Off-Road Driving

Running lower tire pressure off-road can improve your ride comfort and vehicle traction. Reducing the tire air pressure allows the tire to bulge slightly, improving its surface area for better flotation and ability to mold or form to the ground contour. Different terrain, tires, and vehicles require different tire pressure. Hard surfaces like rock and heavier vehicles require higher pressures than softer surfaces such as sand and lighter vehicles. You will need to experiment to determine what is right for your situation. It is easier and faster to let air out than it is to replace it so, start high and lower it as required. Remember you must return the tires to normal air pressure before driving on road or at highway conditions. Be sure you have a way to return the tires to their normal on road air pressure.

CAUTION!

Reduced tire pressure increases the risk of tire damage and may cause tire unseating with total loss of air pressure. To reduce the risk of tire unseating, while at a reduced tire pressure, drive at slower speeds and avoid sharp turns or abrupt maneuvers.

Vehicle Recovery

If you drive off-road, you may encounter a situation where you will need to recover your vehicle. Vehicle recovery should always be given consideration before attempting a questionable obstacle. You should never go off-road driving without the ability to recover your vehicle from a situation. Having another vehicle with you usually works best for most situations. The first thing to do is assess the situation. Why are you stuck? Are you hung up on something? Would it be easier to go forward or to go backward? Can you still move the vehicle? Is there an anchor point to winch to? Are you alone or do you have another vehicle to help? Is there high risk of vehicle damage during the recovery process? Answering these questions will help you determine the best method of recovery. If you can still move the vehicle slightly and the only issue is slick ground, then rock cycling your vehicle would be the first choice. If you have ample room, an additional vehicle and there is low risk of vehicle impingement on the surroundings, then using a tow strap to the vehicle tow hooks would be fast and easy. If the vehicle is severely hung up or in a situation where great care needs to be taken during the recovery, then nothing can do the job better than a winch. If you are severely hung up on something you should jack the vehicle up and stack something under the wheels to allow the vehicle to roll off the object without causing further damage. This should be tried before attempting any recovery method.

CAUTION!

Pulling the vehicle off an obstacle, without first clearing the object, may result in additional underbody damage.

- **Rock Cycling Your Vehicle** – Rock cycling your vehicle is one of the easiest, fastest and most commonly used methods. This simply involves shifting your vehicle from DRIVE to REVERSE, while applying throttle after each shift. During this process, for additional traction, try turning your steering wheel quickly back and forth no more than a ¼ turn. If you are stuck in mud, sand, or snow try spinning your tires during this process to clean the debris from the tread and improve the traction. You want to create a rocking motion with the vehicle. This helps build vehicle momentum, which hopefully gets you out. Remember to ease off and on the accelerator before and after the shift. If after a few rock cycles your vehicle is not free, stop and try another method of recovery. Continuous rock cycling will only cause unnecessary damage to your vehicle and the environment.

CAUTION!

Damage can occur when spinning your tires at an excessive high speed. Do not spin your tires faster than an indicated 30 mph (48 km/h).

- **Using The Tow Hooks With A Tow Strap** – Tow straps are a quick and easy way to recover your vehicle from minor situations if you have a secondary vehicle which is not stuck. The tow hooks on your vehicle are designed to take the abusive force generated during vehicle recovery. Do not use the bumper or any other vehicle component as an attachment point. Using tow straps requires coordination between the two drivers. Good communication and line of sight are required for

a safe recovery. First connect the tow strap to the correct attachment points on both vehicles. There should be a least 20 to 30 feet between the vehicles to allow for a safe recovery. If necessary join two tow straps together using a 1 ½ inch hard wood dowel. This will keep the straps from becoming knotted and is safer than using a clevis pin if the strap breaks. Next have the tow vehicle backup, leaving two to three feet worth of slack in the strap. Then the tow vehicle, using light throttle, should accelerate tightening the strap providing the pulling force needed to free the vehicle. The vehicle being recovered should assist in the recovery, at the time of the snap, by slowly spinning the tires in the same direction as the pulling vehicle. After the vehicle becomes free, the driver of the previously stuck vehicle should signal they are free and should hit their brakes stopping both vehicles. The driver of the pulling vehicle should let off the throttle without using the brakes, once signaled by the other driver. This sequence is important to avoid having the recovered vehicle hit the pulling vehicle.

WARNING!

Never use tow straps with end hooks or link two straps with a clevis pin. These heavy metal objects could become projectiles if a strap breaks, which could cause severe injury. Never leave more than two or three feet of slack in the strap. More slack than this greatly increases the risk of injury and vehicle damage. Always keep everyone at least 30 feet away from a strapping or winching situation.

- **Winching (Refer To "Winch Operation" For Additional Information)** – Winching is most commonly used in the following situations: there is no support vehicle available, a high controlled force is required to recover the vehicle, there is a high risk of environmental or

vehicle damage, or where nothing else seems to work. A winch can deliver a high pulling force with a great deal of control. It allows you to walk the vehicle out of the situation in a slow controlled manner. This control works well for avoiding further vehicle damage. Once you decide it is time to use the winch look for a good anchor point. It needs to be strong enough to hold more than the vehicle's weight and provide a direction of pull as straight as possible. Use block and tackle if necessary to improve the angle of pull or increase the winch's pulling force. If the anchor point is a tree use a strap around its base and hook the cable to the strap. If it is another vehicle, then place that vehicle in PARK and block the front tires. If you cannot find an anchor point within reach try using your spare tire by burying it. Once you have determined an anchor point hook up the cable, ensuring there are a least five wraps of cable left on the drum, and place a floor mat or something else over the strung out cable. Placing something over the strung out cable helps keep the cable on the ground if it breaks. Next, place the vehicle in first gear and apply a very light throttle as you power the winch in. Be careful not to allow slack in the cable as you recover the vehicle. Do not try to guide the cable into the drum. If it starts to bunch up on one end, let it. You can re-spool the cable afterwards. Never use a winch cable as a tow strap and always stand back while winching.

WARNING!

Winch cables are under high tension when in use and can become a projectile if they fail. Never stand over or straddle the winch cable. Never jerk or overload the winch cable. Never stand in front of the vehicle while winching. Failure to follow these instructions can result in serious or fatal injury.

After Driving Off-Road

Off-road operation puts more stress on your vehicle than does most on-road driving. After going off-road, it is always a good idea to check for damage. That way you can get any problems taken care of right away and have your vehicle ready when you need it.

- Completely inspect the underbody of your vehicle. Check tires, body structure, steering, suspension, and exhaust system for damage.
- Inspect the radiator for mud and debris and clean as required.
- Check threaded fasteners for looseness, particularly on the chassis, drivetrain components, steering, and suspension. Retighten them, if required, and torque to the values specified in the Service Manual.
- Check for accumulations of plants or brush. These things could be a fire hazard. They might hide damage to fuel lines, brake hoses, axle pinion seals, and propeller shafts.
- After extended operation in mud, sand, water, or similar dirty conditions, have the radiator, fan, brake rotors, wheels, brake linings, and axle yokes inspected and cleaned as soon as possible.

WARNING!

Abrasive material in any part of the brakes may cause excessive wear or unpredictable braking. You might not have full braking power when you need it to prevent a collision. If you have been operating your vehicle in dirty conditions, get your brakes checked and cleaned as necessary.

- If you experience unusual vibration after driving in mud, slush or similar conditions, check the wheels for impacted material. Impacted material can cause a wheel imbalance and freeing the wheels of it will correct the situation.

LIMITED-SLIP DIFFERENTIAL

The limited-slip differential provides additional traction on snow, ice, mud, sand and gravel, particularly when there is a difference between the traction characteristics of the surface under the right and left rear wheels. During normal driving and cornering, the limited-slip unit performs similarly to a conventional differential. On slippery surfaces, however, the differential delivers more of the driving effort to the rear wheel having the better traction.

The limited-slip differential is especially helpful during slippery driving conditions. With both rear wheels on a slippery surface, a slight application of the accelerator will supply maximum traction. When starting with only one rear wheel on an excessively slippery surface, slight momentary application of the parking brake may be necessary to gain maximum traction.

WARNING!

On vehicles equipped with a limited-slip differential never run the engine with one rear wheel off the ground since the vehicle may drive through the rear wheel remaining on the ground. You could lose control of the vehicle.

Care should be taken to avoid sudden accelerations when both rear wheels are on a slippery surface. This could cause both rear wheels to spin, and allow the vehicle to slide sideways on the crowned surface of a road or in a turn.

DRIVING ON SLIPPERY SURFACES

Acceleration

Rapid acceleration on snow covered, wet, or other slippery surfaces may cause the driving wheels to pull erratically to the right or left. This phenomenon occurs when there is a difference in the surface traction under the rear (driving) wheels.

WARNING!

Rapid acceleration on slippery surfaces is dangerous. Unequal traction can cause sudden pulling of the rear wheels. You could lose control of the vehicle and possibly have a collision. Accelerate slowly and carefully whenever there is likely to be poor traction (ice, snow, wet mud, loose sand, etc.).

Traction

When driving on wet or slushy roads, it is possible for a wedge of water to build up between the tire and road surface. This is known as hydroplaning and may cause partial or complete loss of vehicle control and stopping ability. To reduce this possibility, the following precautions should be observed:

1. Slow down during rainstorms or when the roads are slushy.
2. Slow down if the road has standing water or puddles.
3. Replace tires when tread wear indicators first become visible.
4. Keep tires properly inflated.
5. Maintain sufficient distance between your vehicle and the vehicle in front of you to avoid a collision in a sudden stop.

DRIVING THROUGH WATER

Driving through water more than a few inches/centimeters deep will require extra caution to ensure safety and prevent damage to your vehicle.

Flowing/Rising Water

WARNING!

Do not drive on or across a road or path where water is flowing and/or rising (as in storm run-off). Flowing water can wear away the road or path's surface and cause your vehicle to sink into deeper water. Furthermore, flowing and/or rising water can carry your vehicle away swiftly. Failure to follow this warning may result in injuries that are serious or fatal to you, your passengers, and others around you.

Shallow Standing Water

Although your vehicle is capable of driving through shallow standing water, consider the following Caution and Warning before doing so.

CAUTION!

- **Always check the depth of the standing water before driving through it. Never drive through standing water that is deeper than the bottom of the tire rims mounted on the vehicle.**
- **Determine the condition of the road or the path that is under water and if there are any obstacles in the way before driving through the standing water.**
- **Do not exceed 5 mph (8 km/h) when driving through standing water. This will minimize wave effects.**

(Continued)

CAUTION! *(Continued)*

- **Driving through standing water may cause damage to your vehicle's drivetrain components. Always inspect your vehicle's fluids (i.e., engine oil, transmission, axle, etc.) for signs of contamination (i.e., fluid that is milky or foamy in appearance) after driving through standing water. Do not continue to operate the vehicle if any fluid appears contaminated, as this may result in further damage. Such damage is not covered by the New Vehicle Limited Warranty.**
- **Getting water inside your vehicle's engine can cause it to lock up and stall out, and cause serious internal damage to the engine. Such damage is not covered by the New Vehicle Limited Warranty.**

WARNING!

- **Driving through standing water limits your vehicle's traction capabilities. Do not exceed 5 mph (8 km/h) when driving through standing water.**
- **Driving through standing water limits your vehicle's braking capabilities, which increases stopping distances. Therefore, after driving through standing water, drive slowly and lightly press on the brake pedal several times to dry the brakes.**
- **Getting water inside your vehicle's engine can cause it to lock up and stall out, and leave you stranded.**
- **Failure to follow these warnings may result in injuries that are serious or fatal to you, your passengers, and others around you.**

OFF-ROAD DRIVING TIPS

Care should be taken when attempting to climb steep hills or driving diagonally across a hill or slope. If natural obstacles force you to travel diagonally up or down a hill, choose a mild angle and keep as little side tilt as possible. Keep the vehicle moving and make turns slowly and cautiously.

If you must back down a hill, back straight down using REVERSE gear. Never back down in NEUTRAL or diagonally across the hill.

When driving over sand, mud, and other soft terrain, shift to low gear and drive steadily. Apply the accelerator slowly to avoid spinning the wheels.

Do not reduce the tire pressures for this type of driving.

After Driving Off-Road

Off-road operation puts more stress on your vehicle than does most on-road driving. After going off-road, it is always a good idea to check for damage. That way you can get any problems taken care of right away and have your vehicle ready when you need it.

- Completely inspect the underbody of your vehicle. Check tires, body structure, steering, suspension, and exhaust system for damage.
- Inspect the radiator for mud and debris and clean as required.

- Check threaded fasteners for looseness, particularly on the chassis, drivetrain components, steering, and suspension. Retighten them, if required, and torque to the values specified in the Service Manual.
- Check for accumulations of plants or brush. These things could be a fire hazard. They might hide damage to fuel lines, brake hoses, axle pinion seals, and propeller shafts.
- After extended operation in mud, sand, water, or similar dirty conditions, have the radiator, fan, brake rotors, wheels, brake linings, and axle yokes inspected and cleaned as soon as possible.

WARNING!

Abrasive material in any part of the brakes may cause excessive wear or unpredictable braking. You might not have full braking power when you need it to prevent a collision. If you have been operating your vehicle in dirty conditions, get your brakes checked and cleaned as necessary.

- If you experience unusual vibration after driving in mud, slush or similar conditions, check the wheels for impacted material. Impacted material can cause a wheel imbalance and freeing the wheels of it will correct the situation.

WINCH USAGE (POWER WAGON ONLY) — IF EQUIPPED

Things To Know Before Using Your Winch

General Winch Information

Your vehicle is equipped with an electric vehicle recovery winch. This winch uses the electrical power from the vehicle charging system to power a motor that winds wire rope into the winch drum via planetary gear reduction. By nature, a winch is capable of generating very high forces and should be used with care. Do not operate the winch without reading and understanding the complete winch owner's manual.

Tensioning The Wire Rope

The winch rope must be properly tensioned before use. Follow the instructions below to tension the rope:

1. Un-spool the wire rope leaving five wraps of rope on the winch drum.
2. Attach the hook to a suitable anchor point.

CAUTION!

Be certain the anchor will withstand the load required to tension the wire rope.

3. Apply at least 500 lbs (227 kg) of tension to the rope while winding the rope. Always use care to ensure the rope does not pile up on one side of the drum and is neatly wound onto the drum.

CAUTION!

Wire rope must spool on the winch drum in the direction indicated on the drum rotation decal on the winch.

Low Voltage Interrupt

Your winch is equipped with a device that will interrupt winch function if the vehicle charging system voltage drops to a low level. The winch will not power-in or out for 30 seconds if this device is tripped. If the interrupt is tripped, the vehicle should be operated at high idle for a few minutes to allow the vehicle charging system to recover before continuing to winch.

Winch Motor Thermal Protection

Your winch is equipped with a thermal protection device in the motor. If the winch is operated for an excessive duration, the device may interrupt motor function to protect the winch motor. During this time the winch will power-out but will not power-in. Allow the winch motor to cool for a few minutes before continuing to winch. The winch will resume normal function once the motor cools.

Understanding The Features Of Your Winch

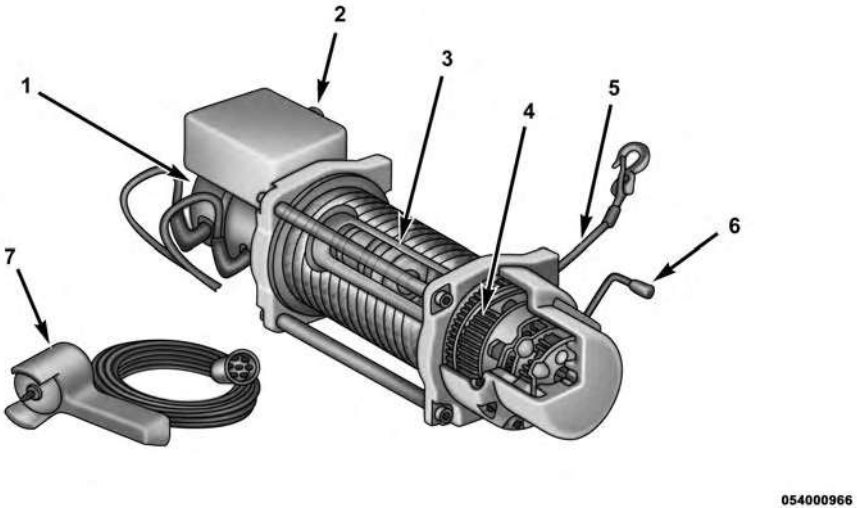

Winch Components

1. **Motor:** The winch motor is powered by the vehicle charging system and features a thermal protection switch that automatically stops motor function in the power-in direction if the motor gets too hot.
2. **Remote Socket:** The remote socket allows the remote control to be attached to the control pack to allow the winch to function.
3. **Winch Drum With Integral Brake:** The winch drum allows the wire rope to be stored on the winch and transmits force to the wire rope. The winch is equipped with an integral brake that will stop rotation of the winch drum if the winch motor is stopped.
4. **3-Stage Planetary Gear Set:**Provides balance between speed and pulling power.
5. **Wire Rope:** The wire rope allows the winch to be connected to an anchor to provide a pulling force.
6. **Clutch Lever:** The clutch lever allows the winch drum to be disconnected from the winch motor to allow the wire rope to be pulled from the winch by hand.
7. **Remote Control:** The remote control provides the interface between the winch operator and the winch. The remote control provides the ability to power the winch in, out, and stop the winch. To operate the winch, the toggle switch is pressed down to power the winch in and up to power the winch out. The winch will stop if the switch is left in the neutral (center) position.

CAUTION!

If not installed, the hook strap must be placed on the hook.

Fairlead: The fairlead acts as a guide for the wire rope and minimizes damage to the rope.

Winch Accessories

The following accessories are necessary to attach the winch to anchors, change direction of pull, and for safe winching.

054000967

Gloves: Wire rope, through use, will develop "barbs" which can slice skin. It is extremely important to wear protective gloves while operating the winch or handling the wire rope. Avoid loose fitting clothes or anything that could become entangled in the wire rope and other moving parts.

054000968

Snatch/Block Pulley: Used properly, the multi-purpose snatch block allows you to (1) increase the winch's pulling power; and (2) change your pulling direction without damaging the wire rope. Proper use of the snatch block is covered in "Before You Pull."

054000969

Clevis/D-Shackles: The D-Shackle is a safe means of connecting the looped ends of cables, straps and snatch blocks. The shackle's pin is threaded to allow easy removal.

054000970

Tree Trunk Protector: Typically made of tough, high-quality nylon, it provides the operator an attachment point for the winch rope to a wide variety of anchor points and objects, as well as protect living trees.

Operating Your Winch

WARNING!

Failure to observe any of these warnings regarding proper winch usage may result in severe injury.

- **Always use supplied hook strap to hold the hook when spooling wire rope in or out.**
- **Never use as a hoist.**
- **Never use to move persons.**
- **Never exceed winch or wire rope rated capacity.**
- **Always wear heavy leather gloves when handling the wire rope.**
- **Never touch wire rope or hook while in tension or under load.**
- **Never engage or disengage clutch if winch is under load, wire rope is in tension, or wire rope drum is moving.**

(Continued)

WARNING! ***(Continued)***

- **Always stand clear of wire rope and load and keep others away during winching.**
- **Always keep hands and clothing clear of the wire rope, hook and fairlead opening during operation and when spooling.**
- **Never wrap wire rope back onto itself. Always use a choker chain, wire choker rope or tree trunk protector on the anchor.**
- **Never attach a recovery strap to the winch hook to increase the length of a pull.**
- **Never attempt to tow a vehicle with the recovery strap attached directly to the winch hook.**
- **Never use "bungee" straps that develop tremendous and potentially dangerous amounts of force when stretched.**

(Continued)

WARNING! ***(Continued)***

- **Always disconnect the remote control when not in use.**
- **Never winch when there are less than five wraps of wire rope around the winch drum.**
- **Always pass remote control through a window to avoid pinching lead in door, then using remote inside a vehicle.**
- **Never leave the remote control plugged into the winch while free spooling, rigging or sitting idle.**

General Information

Practice using your winch before you get stuck. Some key points to remember when using your winch are:

1. Always take your time to assess the situation and plan your pull carefully.
2. Always take your time when using a winch.
3. Use the right equipment for the situation.
4. Always wear leather gloves and do not allow the wire rope to slip through your hands when handling the rope.
5. Only the operator should handle the wire rope and remote control.
6. Think safety at all times.

Vehicle Recovery Using The Winch

CAUTION!

- **Always Know Your Winch: Take the time to fully read and understand the included Installation and Operations Guide, and Basic Guide to Winching Techniques, in order to understand your winch and the winching operation.**

(Continued)

CAUTION! ***(Continued)***

- **Always inspect winch installation and wire rope condition before operating the winch. Frayed, kinked or damaged wire rope must be replaced immediately. Loose or damaged winch installation must be corrected immediately.**
- **Always be sure any element which can interfere with safe winching operations is removed prior to initiating winching.**
- **Always keep remote control lead clear of the drum, wire rope and rigging.**
- **Inspect for cracks, pinches, frayed wires, or loose connections. Replace if damaged.**
- **Be careful not to pull the Winch Cable Collar through the rollers. Watch and listen to Winch for proper snugness.**

1. Inspect the winch, winch mount, and wire rope for damage. Do not use the winch if the mount is loose or rope shows excessive wear or damage.

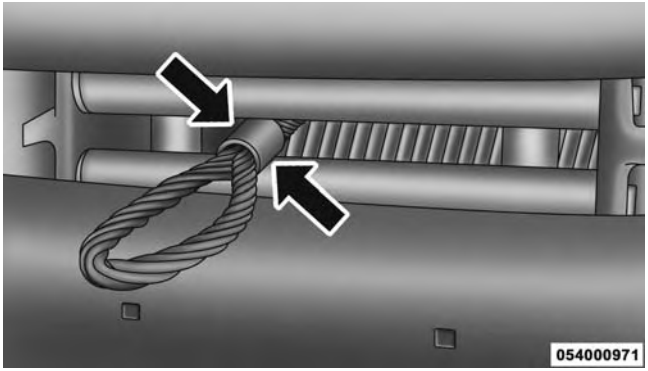

2. Put on gloves.
3. Disengage the clutch to allow free spooling of the winch drum, rotate the clutch lever on the winch to disengage. Freespooling conserves battery power.

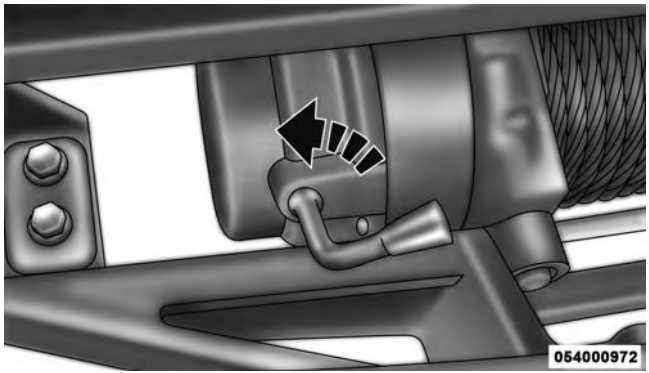

Free Spool

4. Free the winch hook and attach the hook strap. Free the winch hook from its anchor point. Attach the hook strap to the hook (if not attached).

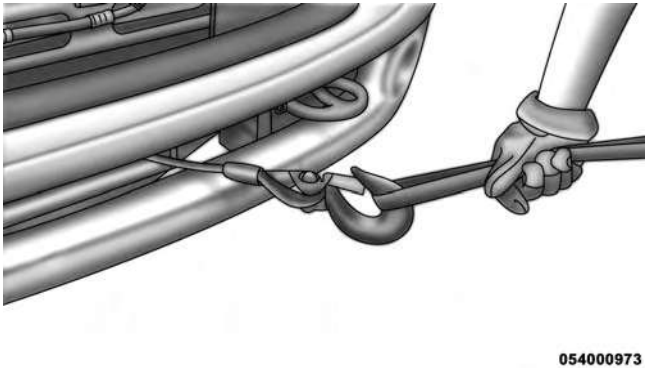

Hook Strap

5. Pull the wire to the anchor point. Pull out enough wire rope to reach your anchor point. Be sure to keep a certain amount of tension on the wire as it can become twisted and over-wrapped when slackened, leading to wire rope damage. To prevent losing the end, hold the hook strap while you work.

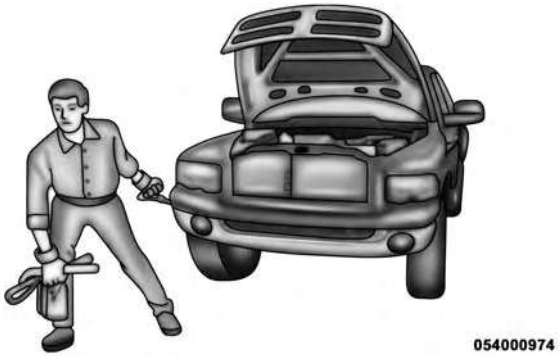

6. Secure to the anchor point. Once you have established your anchor point, secure the tree-trunk protector or choker-chain around the object.

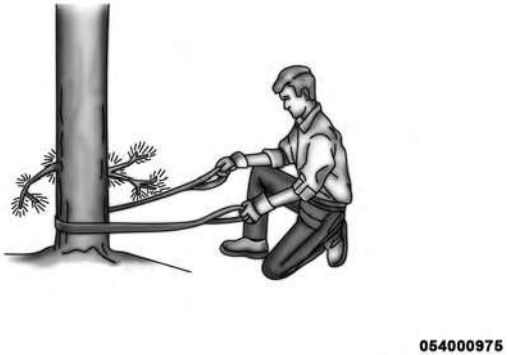

Tree Trunk Protector

CAUTION!

Always be certain the anchor you select will withstand the load.

NOTE: How to choose an anchor point: A secure anchor is critical to winching operations. An anchor must be strong enough to hold while winching. Natural anchors include trees, stumps and rocks. Hook the cable as low as possible. If no natural anchors are available when recovering another vehicle, your vehicle becomes the anchor point. In this case, be sure to put the transmission in NEUTRAL, apply the hand brake and block its wheels to prevent your vehicle from moving. Ideally, you'll want an anchor point that will enable you to pull straight in the direction the vehicle will move. This allows the wire rope to wind tightly and evenly onto the spooling drum. An anchor point as far away as possible will provide the winch with its greatest pulling power.

7. Attach the Clevis/D-shackle and Tree Trunk Protector. Attach the shackle to the two ends of the strap or chain and through the hook loop, being careful not to over tighten (tighten and back-off 1/2 turn).

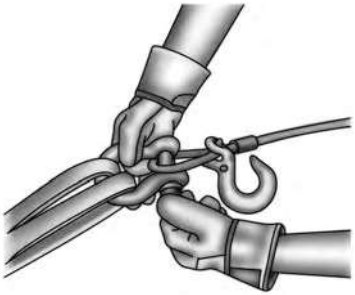

054000976

Clevis/D-Shackles

8. Lock the clutch. Lock the winch drum by rotating the clutch lever on the winch to engage.

NOTE: Always ensure the clutch is fully engaged or disengaged.

9. Connect the remote control to the winch control box, located behind the front bumper. Be careful not to let the remote control cord dangle in front of the winch. If you choose to control the winch from inside your vehicle, always pass the remote through a window to avoid pinching the cord in the door. Always disconnect the remote control when not in use.

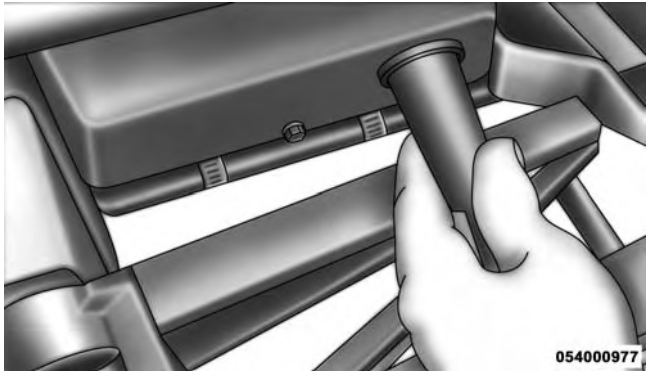

10. Put wire rope under tension. Using the remote control switch, slowly wind the wire rope until no slack remains. Once the wire rope is under tension, stand well clear of it and never step over it.

11. Check your anchor. Make sure all connections are secured and free of debris before continuing with the winching procedure.

12. Check wire rope. The wire rope should be neatly wound around the spooling drum. Improper winding can cause damage to the wire rope.

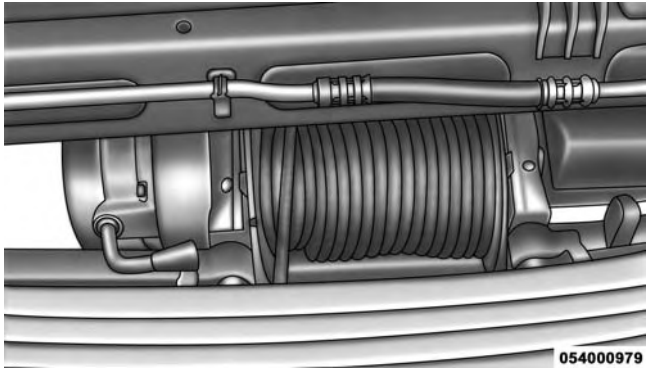

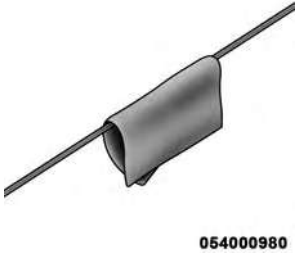

In certain situations you may decide to throw a heavy blanket or similar object over the wire rope. A heavy blanket can absorb energy should the wire rope break. Place it on the wire rope midway between the winch and the anchor point. Do this before the wire rope is put under tension. Do not approach or move the blanket once tension is applied. Do not allow it to get pulled into the fairlead. If it is necessary to move or remove the blanket, slack the tension on the wire rope first.

13. **Establish "no people" zones:** Make your intentions clear. Be sure that everyone in the immediate vicinity surrounding the winching operation is completely aware of your intentions before you pull. **Declare where the spectators should not stand - never behind or in front of the vehicle and never near the wire rope or snatch block. Your situation may have other "no people" zones.**

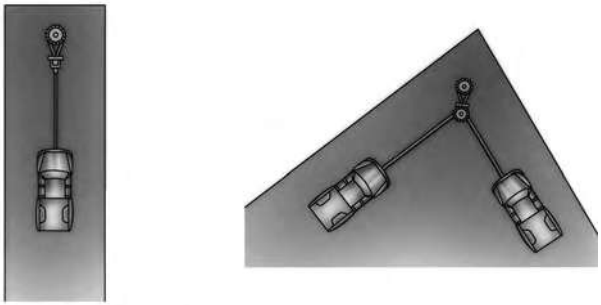

054000981

No People Zones

14. Begin winching. With the winching vehicles engine on and light tension already on the wire rope, begin winching slowly and steadily. Be sure that the wire rope is winding evenly and tightly around the spooling drum. For additional assistance, the winched vehicle can be slowly driven while being pulled by the winch. Continue pulling until the vehicle is on stable ground. If you are able to drive the vehicle, the winching operation is complete.

Using The Remote Control

NOTE:

- Avoid overheating the winch motor. For extended winching, stop at reasonable intervals to allow the winch motor to cool down.

- **What to look for under load:** The wire rope must always spool onto the drum as indicated by the drum rotation decal on the winch. As you power-in, make sure the wire rope winds evenly and tightly on the drum. This prevents the outer wire wraps from drawing into the inner wraps, binding and damaging the wire rope. Avoid shock loads by using the control switch intermittently to take up wire rope slack. Shock loads can momentarily far exceed the winch and wire rope ratings. During side pulls the wire rope tends to stack up at one end of the drum. This stack can become large enough to cause serious damage to the winch. So, line up pulls as straight ahead as possible and stop winching if the wire rope comes close to the tie rods or mounting plate. To fix an uneven stack, spool out that section of the rope and reposition it to the opposite end of the drum, which will free up space for continued winching.

15. Secure vehicle. Once recovery of the vehicle is complete, be sure to secure the vehicle's brakes and shift the transmission to PARK. Release tension in the wire rope.
16. Disconnect the wire rope, and disconnect from the anchor.
17. Rewind the wire rope. The person handling the wire rope should walk the rope in and not let it slide through the hand, control the winch at all times.

WARNING!

To prevent serious injury, NEVER put your fingers inside the hook area as you are powering-in.

NOTE: How to spool under no load: Arrange the remote control lead so it cannot be caught in the winch. Arrange the wire rope so it will not kink or tangle when spooled. Be sure any wire rope already on the spooling drum is wound tightly and evenly layered. Tighten and straighten the layer if necessary. Keep the wire rope under light tension and spool the wire rope back and onto the winch drum in even layers. Stop frequently to tighten and straighten the layers as necessary. Repeat this process until the winch hook is the same distance as the full length of the remote control from the winch. Pinch the hook between your thumb and forefinger and attach the hook strap. Hold the hook strap between the thumb and forefinger to keep tension on the wire rope. Walk the wire rope towards the fairlead, carefully spooling in the remaining wire rope. By pulsing the remote control switch.

18. Store the hook on the most outboard loop of the tow hook.

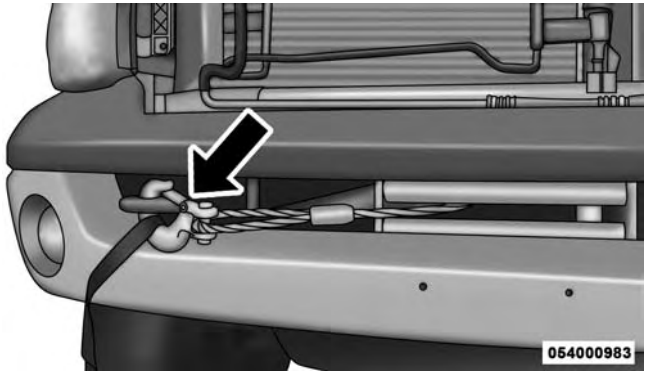

19. Disconnect the remote control. Disconnect the remote control cord from the control box and store in a clean and dry place. Winching operations are now complete. Put the cap on the solenoid plug-in.

NOTE: Always store the remote control in a protected, clean, dry area.

Rigging Techniques

Various winching situations will require application of other winching techniques. These could range from too little distance to achieve maximum pull using straight line rigging, simply increasing pulling power, or maintaining a straight-line pulling situation. You will have to assess what technique is correct for your situation. Think "safety" at all times.

How To Change The Pulling Direction

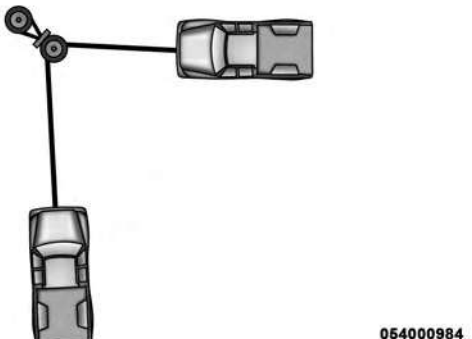

Change Pulling Directions

All winching operations should have a straight line from the winch to the object being pulled. This minimizes the wire rope collecting on one side of the drum affecting pulling efficiency and damaging wire rope. A snatch block, secured to a point directly in front of the vehicle will enable you to change your pulling direction while still allowing the wire rope to be at 90° to wind properly onto the spooling drum.

Increasing Pulling Power

In some cases, you may find yourself needing more pulling power. The use of snatch blocks increases mechanical advantage and that increases your pulling power.

Double Line

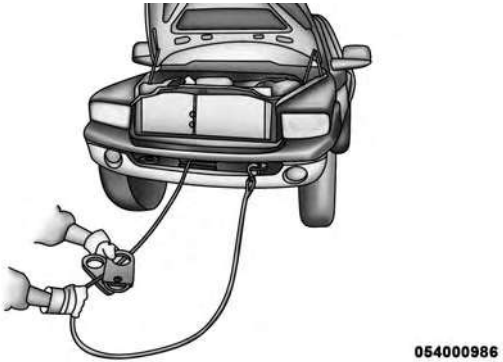

Because pulling power decreases with the number of layers of wire rope on the winch drum, you can use a snatch block to double line out more wire rope. This decreases the number of layers of wire rope on the drum, and increases pulling power. Start by feeding out enough wire rope to free the winch hook. Attach the hook to your vehicle's frame/tow hook and run the wire rope through a snatch block. Disengage the clutch and, using the snatch block, pull out enough wire to reach your anchor point. Do not attach the hook to the mounting kit. Secure to the anchor point with a tree trunk protector or choker chain. Attach the clevis/shackle. Attach the shackle to the two ends of the strap/chain, being careful not to over tighten (tighten and back-off 1/2 turn).

POWER STEERING — 1500 Models

The electric power steering system will give you good vehicle response and increased ease of maneuverability in tight spaces. The system will vary its assist to provide light efforts while parking and good feel while driving. If the electric steering system experiences a fault that prevents it from providing assist, you will still have the ability to steer the vehicle manually.

WARNING!

Continued operation with reduced or no power steering assist could pose a safety risk to yourself and others. Service should be obtained as soon as possible.

If the Steering icon is flashing, it indicates that the vehicle needs to be taken to the dealer for service. It is likely the vehicle has lost power steering assistance.

If the Steering icon is displayed and the "POWER STEERING SYSTEM OVER TEMP" message is displayed on the EVIC screen, they indicate that extreme steering maneuvers may have occurred which caused an over temperature condition in the power steering system. Once driving conditions are safe, pull over and let the vehicle idle for a few moments until the icon and message turn off. Refer to "Electronic Vehicle Information (EVIC)" in "Understanding Your Instrument Panel" for further information.

If the Steering icon is displayed and the "SERVICE POWER STEERING – ASSIST OFF" message is displayed the EVIC screen, they indicate the vehicle needs to be taken to the dealer for service. Refer to "Electronic Vehicle Information (EVIC)" in "Understanding Your Instrument Panel" for further information.

NOTE:

- Even if the power steering assistance is no longer operational, it is still possible to steer the vehicle. Under these conditions there will be a substantial increase in steering effort, especially at low speeds and during parking maneuvers.
- If the condition persists, see your authorized dealer for service.

POWER STEERING — 2500/3500 Models

The standard power steering system will give you good vehicle response and increased ease of maneuverability in tight spaces. The system will provide mechanical steering capability if power assist is lost.

If for some reason the power assist is interrupted, it will still be possible to steer your vehicle. Under these conditions, you will observe a substantial increase in steering effort, especially at very low vehicle speeds and during parking maneuvers.

NOTE:

- Increased noise levels at the end of the steering wheel travel are considered normal and do not indicate that there is a problem with the power steering system.
- Upon initial start-up in cold weather, the power steering pump may make noise for a short amount of time. This is due to the cold, thick fluid in the steering system. This noise should be considered normal, and it does not in any way damage the steering system.

WARNING!

Continued operation with reduced power steering assist could pose a safety risk to yourself and others. Service should be obtained as soon as possible.

CAUTION!

Prolonged operation of the steering system at the end of the steering wheel travel will increase the steering fluid temperature and it should be avoided when possible. Damage to the power steering pump may occur.

Power Steering Fluid Check– 2500/3500 Models

Checking the power steering fluid level at a defined service interval is not required. The fluid should only be checked if a leak is suspected, abnormal noises are apparent, and/or the system is not functioning as anticipated. Coordinate inspection efforts through an authorized dealer.

CAUTION!

Do not use chemical flushes in your power steering system as the chemicals can damage your power steering components. Such damage is not covered by the New Vehicle Limited Warranty.

WARNING!

Fluid level should be checked on a level surface and with the engine off to prevent injury from moving parts and to ensure accurate fluid level reading. Do not overfill. Use only manufacturer's recommended power steering fluid.

If necessary, add fluid to restore to the proper indicated level. With a clean cloth, wipe any spilled fluid from all surfaces. Refer to "Fluids, Lubricants, and Genuine Parts" in "Maintaining Your Vehicle" for further information.

FUEL SAVER TECHNOLOGY 5.7L/6.4L ENGINES ONLY – IF EQUIPPED

This feature offers improved fuel economy by shutting off four of the engine's eight cylinders during light load and cruise conditions. The system is automatic with no driver inputs or additional driving skills required.

NOTE: This system may take some time to return to full functionality after a battery disconnect.

PARKING BRAKE

Before leaving the vehicle, make sure that the parking brake is fully applied. Also, be certain to leave the transmission in PARK.

The foot operated parking brake is located below the lower left corner of the instrument panel. To apply the park brake, firmly push the park brake pedal fully. To release the parking brake, pull the parking brake release handle.

Parking Brake Release

When the parking brake is applied with the ignition switch ON, the "Brake Warning Light" in the instrument cluster will illuminate.

NOTE:

- When the parking brake is applied and the transmission is placed in gear, the "Brake Warning Light" will flash. If vehicle speed is detected, a chime will sound to alert the driver. Fully release the parking brake before attempting to move the vehicle.
- This light only shows that the parking brake is applied. It does not show the degree of brake application.

When parking on a hill, it is important to turn the front wheels toward the curb on a downhill grade and away from the curb on an uphill grade. Apply the parking brake before placing the shift lever in PARK, otherwise the load on the transmission locking mechanism may make it difficult to move the shift lever out of PARK. The parking brake should always be applied whenever the driver is not in the vehicle.

WARNING!

- **Never use the PARK position as a substitute for the parking brake. Always apply the parking brake fully when parked to guard against vehicle movement and possible injury or damage.**
- **Never leave children alone in a vehicle, or with access to an unlocked vehicle. Leaving unattended children in a vehicle is dangerous for a number of reasons. A child or others could be seriously or fatally injured.**
- **Do not leave the key fob in or near the vehicle (or in a location accessible to children, and do not leave a vehicle equipped with Keyless Enter-N-Go in the ACC or ON/RUN mode). A child could operate power windows, other controls, or move the vehicle.**

(Continued)

WARNING! *(Continued)*

- **Be sure the parking brake is fully disengaged before driving; failure to do so can lead to brake failure and a collision.**
- **Always fully apply the parking brake when leaving your vehicle or it may roll and cause damage or injury. Also, be certain to leave the transmission in PARK. Failure to do so may cause the vehicle to roll and cause damage or injury.**

CAUTION!

If the Brake System Warning Light remains on with the parking brake released, a brake system malfunction is indicated. Have the brake system serviced by an authorized dealer immediately.

BRAKE SYSTEM

If power assist is lost for any reason (for example, repeated brake applications with the engine off), the brakes will still function. However, you will experience a substantial increase in braking effort to stop the vehicle.

If either the front or rear hydraulic system loses normal braking capability, the remaining system will still function with some loss of overall braking effectiveness. This will be evident by increased pedal travel during application, greater pedal force required to slow or stop, and activation of the “Brake Warning Light” and the “ABS Warning Light” (if equipped) during brake use.

Four-Wheel Anti-Lock Brake System

WARNING!

The Four-Wheel Anti-Lock Brake System contains sophisticated electronic equipment. It may be susceptible to interference caused by improperly installed or high output radio transmitting equipment. This interference can cause possible loss of anti-lock braking capability. Installation of such equipment should be performed by qualified professionals.

The Four-Wheel Anti-Lock Brake System (ABS) is designed to aid the driver in maintaining vehicle control under adverse braking conditions. The system operates with a separate computer to modulate hydraulic pressure to prevent wheel lockup and help avoid skidding on slippery surfaces.

The system's pump motor runs during an ABS stop to provide regulated hydraulic pressure. The pump motor makes a low humming noise during operation. This is normal.

The ABS conducts a low-speed selftest at about 10 mph (16 km/h). If you have your foot lightly on the brake while this test is occurring, you may feel slight pedal movement. The movement can be more apparent on ice and snow. This is normal.

When you are in a severe braking condition involving use of the ABS, you will experience some pedal drop as the vehicle comes to a complete stop. This is the result of the system reverting to the base brake system and is normal.

Engagement of the ABS may be accompanied by a pulsing sensation. You may also hear a clicking noise. These occurrences are normal, and indicate that the system is functioning.

ABS Warning Light

The ABS includes an amber warning light. When the light is illuminated, the ABS is not functioning. The system reverts to standard, non-anti-lock brakes.

WARNING!

- **Pumping of the anti-lock brakes will diminish their effectiveness and may lead to a collision. Pumping makes the stopping distance longer. Just press firmly on your brake pedal when you need to slow down or stop.**
- **The Anti-Lock Brake System (ABS) cannot prevent the natural laws of physics from acting on the vehicle, nor can it increase braking or steering efficiency beyond that afforded by the condition of the vehicle brakes and tires or the traction afforded.**

(Continued)

WARNING! ***(Continued)***

- **The ABS cannot prevent collisions, including those resulting from excessive speed in turns, following another vehicle too closely, or hydroplaning.**
- **The capabilities of an ABS-equipped vehicle must never be exploited in a reckless or dangerous manner which could jeopardize the user's safety or the safety of others.**

Hydraulic Brake Assist – 2500/3500 Models Only – Except Power Wagon

The brake system power assist is provided by a hydro-boost unit which shares fluid with the power steering system. You may experience some clicking or hissing noises from the hydro-boost system during hard braking conditions.

NOTE: Under cold temperatures, pedal effort will be higher than normal until the power steering fluid reaches operating temperature.

ELECTRONIC BRAKE CONTROL SYSTEM

Your vehicle is equipped with an advanced electronic brake control system that includes Anti-Lock Brake System (ABS), Traction Control System (TCS), Brake Assist System (BAS), Electronic Roll Mitigation (ERM), Hill Start Assist (HSA), Hill Decent Control (HDC), Electronic Stability Control (ESC) and Trailer Sway Control (TSC). All of the systems work together to enhance vehicle stability and control in various driving conditions, and are commonly referred to as ESC.

Anti-Lock Brake System (ABS)

The ABS aids the driver in maintaining vehicle control under adverse braking conditions. The system controls hydraulic brake pressure to prevent wheel lockup and help avoid skidding on slippery surfaces during braking.

NOTE: ABS improves steering control of the vehicle during hard braking maneuvers.

WARNING!

- **ABS cannot prevent the natural laws of physics from acting on the vehicle, nor can it increase braking or steering efficiency beyond that afforded by the condition of the vehicle brakes and tires or the traction afforded.**
- **The ABS cannot prevent collisions, including those resulting from excessive speed in turns, following another vehicle too closely, or hydroplaning.**
- **The capabilities of an ABS-equipped vehicle must never be exploited in a reckless or dangerous manner which could jeopardize the user's safety or the safety of others.**

Traction Control System (TCS) – If Equipped

The TCS monitors the amount of wheel spin of each of the driven wheels. If wheel spin is detected, brake pressure is applied to the slipping wheel(s), and engine power is reduced to provide enhanced acceleration and stability. A feature of the TCS functions similarly to a limited-slip differential and controls the wheel spin across a driven axle. If one wheel on a driven axle is spinning faster than the other, the system will apply the brake of the spinning wheel. This will allow more engine torque to be applied to the wheel that is not spinning. This feature remains active even if TCS and ESC are in the "Partial Off" mode. Refer to "Electronic Stability Control (ESC)" in this section of this manual. This brake pressure modulation transfers drive torque from slipping to non-slipping wheels to provide optimal forward traction.

Brake Assist System (BAS) – If Equipped

The BAS is designed to optimize the vehicle's braking capability during emergency braking maneuvers. The BAS detects an emergency braking situation by sensing the rate and amount of brake application and then applies optimum pressure to the brakes. The system applies optimum pressure to the brakes in emergency braking conditions. This can help reduce braking distances. The BAS complements the ABS. Applying the brakes very quickly results in the best BAS assistance. To receive the benefit of BAS, you must apply continuous braking pressure during the stopping sequence. Do not reduce brake pedal pressure unless braking is no longer desired.

Once the brake pedal is released, the BAS is deactivated.

WARNING!

- **The BAS cannot prevent the natural laws of physics from acting on the vehicle, nor can it increase braking efficiency beyond that afforded by the condition of the vehicle brakes and tires or the traction afforded.**
- **The BAS cannot prevent collisions, including those resulting from excessive speed in turns, following another vehicle too closely, or hydroplaning.**
- **The capabilities of a BAS-equipped vehicle must never be exploited in a reckless or dangerous manner which could jeopardize the user's safety or the safety of others.**

Hill Start Assist (HSA) – If Equipped

The HSA system is designed to assist the driver in launching a vehicle on an incline. HSA will maintain the level of brake pressure the driver inputs for a short duration once the driver takes his foot off of the brake pedal. If the driver does not apply the throttle during this short duration, the system will release brake pressure and the vehicle will roll down the incline. The system will release brake pressure in proportion to the amount of throttle applied.

During operation, HSA will activate the brake control system and a clicking noise may occur. If your foot is on the brake pedal during operation you may feel a slight pedal movement. The clicking and pedal movement is normal and both will stop when HSA becomes inactive.

HSA Activation Criteria

The following criteria must be met in order for HSA to activate:

- Vehicle must be stopped
- Vehicle must be on an approximate 7% or greater incline
- Gear selection matches vehicle uphill direction (i.e., vehicle facing uphill is in forward gear; vehicle backing uphill is in REVERSE gear).

WARNING!

There may be situations on minor hills (i.e., less than 7%), with a loaded vehicle or while pulling a trailer where the system will not activate and slight rolling may occur, which could cause a collision with another vehicle or object. Always remember the driver is responsible for braking the vehicle.

The system will only work if the intended direction of the vehicle and vehicle gear match. For example, if the intended direction is forward up a hill and the vehicle is in DRIVE and the activation criteria are met, HSA will activate.

The system will work in REVERSE and all forward gears, and will not activate if the vehicle is placed in NEUTRAL.

Towing And Hauling With HSA

The HSA system does not know if your vehicle is loaded or towing a trailer unless the TOW/HAUL switch, located on the center stack, is selected. When activated, the "TOW/HAUL Indicator Light" will illuminate in the instrument cluster. Refer to "Automatic Transmission" in "Starting and Operating" for further information. In order to accommodate the extra weight entailed under towing and hauling conditions and to increase driver comfort while launching on a hill, the system recognizes when the TOW/HAUL switch is activated and compensates by releasing brake pressure at a slower rate while throttle is applied in order to prevent the vehicle from rolling down the hill.

WARNING!

- **If you use a trailer brake controller with your trailer, your trailer brakes may be activated and deactivated with the brake switch. If so, when the brake pedal is released, there may not be enough brake pressure to hold the vehicle and trailer on a hill and this could cause a collision with another vehicle or object behind you. In order to avoid rolling down the incline while resuming acceleration, manually activate the trailer brake or apply more vehicle brake pressure prior to releasing the brake pedal. Always remember the driver is responsible for braking the vehicle.**

(Continued)

WARNING! ***(Continued)***

- **HSA is not a parking brake. If you stop the vehicle on a hill without putting the transmission in PARK or using the parking brake, it will roll down the incline and could collide with another vehicle, object or person, and cause serious or fatal injury. Always remember to use the parking brake while parking on a hill and that the driver is responsible for braking the vehicle.**

HSA Off

Non-EVIC Equipped Vehicles

If you wish to turn off the HSA system, follow this procedure:

1. Start with the engine OFF, and the vehicle in PARK with the wheels straight.
2. Start the engine.
3. With the engine running and the brake applied, rotate the steering wheel 180° counterclockwise from center.
4. Press the "ESC Off" switch four times within 20 seconds. The "ESC Off Indicator Light" should appear and disappear four times.
5. Rotate the steering wheel 360° clockwise (180° clockwise from center).
6. Cycle ignition switch OFF then ON.
7. If the sequence was completed properly, the "ESC Off Indicator Light" will blink several times to confirm HSA is off.

Steps 1 through 7 must be completed within 90 seconds to turn off HSA. Repeat steps 1 through 7 to re-enable HSA functionality.

EVIC Equipped Vehicles

HSA is a Customer Programmable Feature on a EVIC equipped vehicle. If you wish to turn off the HSA feature, refer to "Electronic Vehicle Information Center (EVIC)/ Customer Programmable Features" in "Understanding Your Instrument Panel" for further information.

Hill Descent Control (HDC) – If Equipped (Power Wagon Only)

HDC is intended for low speed off road driving while in 4WD Low Range. HDC maintains vehicle speed while descending hills, during various driving situations. HDC controls vehicle speed by actively controlling the brakes.

HDC has three states:

1. Off (feature is not enabled and will not activate).
2. Enabled (feature is enabled and ready but activation conditions are not met, or driver is actively overriding with brake or throttle application).
3. Active (feature is enabled and actively controlling vehicle speed).

Enabling HDC

HDC is enabled by pressing the HDC switch, but the following conditions must also be met to enable HDC:

- Driveline is in 4WD Low Range.
- Vehicle speed is below 5mph.
- Parking brake is released.
- Driver door is closed.

Activating HDC

Once HDC is enabled it will activate automatically if driven down a grade of sufficient magnitude (greater than approximately 8%). The set speed for HDC is

selectable by the driver, and can be adjusted by using +/- gear shifter. The following summarizes the HDC set speeds:

Gear	Approximate HDC Set Speed
1st	0.8 mph (1.3 km/h)
2nd	2 mph (3.2 km/h)
3rd	3 mph (4.8 km/h)
4th	4 mph (6.4 km/h)
5th	5 mph (8 km/h)
6th	6 mph (9.6 km/h)
D	6 mph (9.6 km/h)
R	1 mph (1.6 km/h)
N	1 mph (3.2 km/h)
P	Not Applicable

NOTE: During HDC the +/- gear shifter input is used for HDC target speed selection and will put the transmission into ERS but will not affect the gear chosen by the transmission unless in Driver Override. During HDC the transmission will shift appropriately for the driver-selected set speed and corresponding driving conditions.

Driver Override:

The driver may override HDC activation with throttle or brake application at any time. While in driver override the transmission will be in ERS which is a top gear limiter and the vehicle will shift from 1st through the gear that is being displayed.

Deactivating HDC

HDC will be deactivated but remain available if any of the following conditions occur:

- Driver overrides HDC set speed with throttle or brake application.
- Vehicle speed exceeds 20 mph but remains below 40 mph.
- Vehicle is on a downhill grade of insufficient magnitude (less than approximately 8%), is on level ground, or is on an uphill grade.
- Vehicle is shifted to park.

Disabling HDC

HDC will deactivate and be disabled if any of the following conditions occur:

- The driver presses the HDC switch.
- The driveline is shifted out of 4WD Low Range.
- The parking brake is applied.
- Driver door opens.
- The vehicle is driven greater than 20 mph for greater than 70 seconds.
- The vehicle is drive greater than 40 mph (HDC exits immediately).

Feedback to the driver:

The instrument cluster has a HDC icon and a HDC switch which has an LED which offers feedback to the driver about the state HDC is in.

- The cluster icon and switch lamp will illuminate and remain on solid when HDC is enabled or activated. This is the normal operating condition for HDC.
- The cluster icon and switch lamp will flash for several seconds then extinguish when the driver presses the HDC switch but enable conditions are not met.
- The cluster icon and switch lamp will flash for several seconds then extinguish when HDC deactivates due to excess speed.
- The cluster icon and switch lamp will flash when HDC deactivates due to overheated brakes. The flashing will stop and HDC will activate again once the brakes have cooled sufficiently.

WARNING!

HDC is only intended to assist the driver in controlling vehicle speed when descending hills. The driver must remain attentive to the driving conditions and is responsible for maintaining a safe vehicle speed.

Electronic Stability Control (ESC) – If Equipped

The ESC system enhances directional control and stability of the vehicle under various driving conditions. ESC corrects for oversteering or understeering of the vehicle by applying the brake of the appropriate wheel to assist in counteracting the oversteer or understeer condition. Engine power may also be reduced to help the vehicle maintain the desired path.

ESC uses sensors in the vehicle to determine the vehicle path intended by the driver and compares it to the actual path of the vehicle. When the actual path does not match

the intended path, ESC applies the brake of the appropriate wheel to assist in counteracting the oversteer or understeer condition.

- Oversteer - when the vehicle is turning more than appropriate for the steering wheel position.
- Understeer - when the vehicle is turning less than appropriate for the steering wheel position.

All Two-Wheel Drive Vehicles And Four-Wheel Drive Vehicles In 2WD, 4WD AUTO, Or 4WD LOCK Modes Can Choose The Following ESC Operating Modes:

ESC On

This is the normal operating mode for ESC in 2WD/4WD AUTO/4WD LOCK modes and in 2WD vehicles. Whenever the vehicle is started or the transfer case (if equipped) is shifted from 4WD LOW or Neutral, back to 4WD LOCK or 4WD AUTO, the ESC system will be in this mode. This mode should be used for almost all driving situations. ESC should only be turned to "Partial Off" or "ESC Off" for specific reasons as noted below.

WARNING!

Electronic Stability Control (ESC) cannot prevent the natural laws of physics from acting on the vehicle, nor can it increase the traction afforded by prevailing road conditions. ESC cannot prevent accidents, including those resulting from excessive speed in turns, driving on very slippery surfaces, or hydroplaning. ESC also cannot prevent accidents resulting from loss of vehicle control due to inappropriate driver input for the conditions. Only a safe, attentive, and skillful driver can prevent accidents. The capabilities of an ESC equipped vehicle must never be exploited in a reckless or dangerous manner which could jeopardize the user's safety or the safety of others.

ESC Partial Off

This mode is entered by momentarily pressing the “ESC Off” switch. When in ″Partial Off″ mode, the TCS portion of ESC, except for the “limited slip” feature described in the TCS section, has been disabled and the ″ESC Off Indicator Light″ will be illuminated. All other stability features of ESC function normally. This mode is intended to be used if the vehicle is in deep snow, sand, or gravel conditions and more wheel spin than TCS would normally allow is required to gain traction. To turn ESC on again, momentarily press the “ESC Off” switch. This will restore the normal “ESC On” mode of operation.

NOTE: To improve the vehicle’s traction when driving with snow chains or starting off in deep snow, sand or gravel, it may be desirable to switch to the “Partial Off” mode by pressing the “ESC Off” switch. Once the situation requiring ESC to be switched to the “Partial Off” mode is overcome, turn ESC back on by momentarily pressing the “ESC Off” switch. This may be done while the vehicle is in motion.

WARNING!

- **When in "Partial Off" mode, the TCS functionality of ESC, (except for the limited slip feature described in the TCS section), has been disabled and the "ESC Off Indicator Light" will be illuminated. When in "Partial Off" mode, the engine power reduction feature of TCS is disabled, and the enhanced vehicle stability offered by the ESC system is reduced.**
- **Trailer Sway control (TSC) is disabled when the ESC system is in the "Partial Off" mode.**

All Four-Wheel Drive Vehicles In 4WD AUTO And 4WD LOCK Modes Can Also Choose The Following ESC Operating Mode. This Is The Only ESC Operating Mode in 4WD LOW:

Full Off

This mode is intended for off-road use when ESC stability features could inhibit vehicle maneuverability due to trail conditions. This mode is entered by pressing and holding the "ESC Off" switch for five seconds when the vehicle is stopped and the engine is running. After five seconds, the "ESC Off Indicator Light" will illuminate and the "ESC Off" message will appear in the odometer. Press and release the trip odometer button located on the instrument cluster to clear this message.

NOTE: The "ESC OFF" message will display and the audible chime will sound when the shift lever is placed into the PARK position from any other position and then moved out of the PARK position. This will occur even if the message was previously cleared.

In this mode, ESC and TCS except for the "limited slip" feature described in the TCS section are turned off until the vehicle reaches a speed of 40 mph (64 km/h). At 40 mph (64 km/h) the system returns to "Partial Off" mode, described above. When the vehicle speed drops below 35 mph (56 km/h) the ESC system shuts off. ESC is off at low vehicle speeds so that it will not interfere with off-road driving but ESC function returns to provide the stability feature at speeds above 40 mph (64 km/h). The "ESC Off Indicator Light" will always be illuminated when ESC is off. To turn ESC on again, momentarily press the "ESC Off" switch. This will restore the normal "ESC On" mode of operation.

"ESC Off" is the only operating mode for ESC in 4WD LOW. Whenever the vehicle is started in 4WD LOW or the transfer case (if equipped) is shifted from 4WD LOCK or NEUTRAL, to 4WD LOW, the ESC system will be in this mode.

WARNING!

In the ESC "Full Off" mode, the engine torque reduction and stability features are disabled. Therefore, the enhanced vehicle stability offered by ESC is unavailable. In an emergency evasive maneuver the ESC system will not engage to assist in maintaining stability. "ESC Off" mode is intended for off-highway or off-road use only.

ESC Activation/Malfunction Indicator Light And ESC OFF Indicator Light

The "ESC Activation/Malfunction Indicator Light" in the instrument cluster will come on when the ignition switch is turned to the ON position. It should go out with the engine running. If the "ESC Activation/Malfunction Indicator Light" comes on continuously with the engine running, a malfunction has been detected in the ESC system. If this light remains on after several ignition cycles, and the vehicle has been driven several miles (kilometers) at speeds greater than 30 mph (48 km/h), see your authorized dealer as soon as possible to have the problem diagnosed and corrected.

The "ESC Activation/Malfunction Indicator Light" (located in the instrument cluster) starts to flash as soon as the tires lose traction and the ESC system becomes active. The "ESC Activation/Malfunction Indicator Light" also flashes when TCS is active. If the "ESC Activation/Malfunction Indicator Light" begins to flash during acceleration, ease up on the accelerator and apply as little throttle as possible. Be sure to adapt your speed and driving to the prevailing road conditions.

NOTE:

- The "ESC Activation/Malfunction Indicator Light" and the "ESC OFF Indicator Light" come on momentarily each time the ignition switch is turned ON.
- Each time the ignition is turned ON, the ESC system will be ON even if it was turned off previously.
- The ESC system will make buzzing or clicking sounds when it is active. This is normal; the sounds will stop when ESC becomes inactive following the maneuver that caused the ESC activation.

The "ESC OFF Indicator Light" indicates the Electronic Stability Control (ESC) is partially off or full off.

Trailer Sway Control (TSC) – If Equipped

The TSC system uses sensors in the vehicle to recognize an excessively swaying trailer and will take the appropriate actions to attempt to stop the sway. The system may reduce engine power and apply the brake of the appropriate wheel(s) to counteract the sway of the trailer. TSC will become active automatically once an excessively swaying trailer is recognized. No driver action is required to activate. Note that TSC cannot stop all trailers from swaying. Always use caution when towing a trailer and follow the trailer tongue weight recommendations. Refer to "Trailer Towing" in "Starting and Operating" for further information. When TSC is functioning, the "ESC Activation/Malfunction Indicator Light" will flash, the engine power may be reduced and you may feel the brakes being applied to individual wheels to attempt to stop the trailer from swaying. TSC is disabled when the ESC system is in the "Partial Off" or "Full Off" modes.

TSC is only active in the default “ESC On” mode. TSC can be disabled by pressing the “ESC Off” switch and entering “ESC Partial Off” mode. It is not active in the “ESC Partial Off” or “ESC Off” modes. Refer to the ESC portion of this section for an explanation of the different ESC operating modes.

WARNING!

If TSC activates while driving, slow the vehicle down, stop at the nearest safe location, and adjust the trailer load to eliminate trailer sway.

TIRE SAFETY INFORMATION

Tire Markings

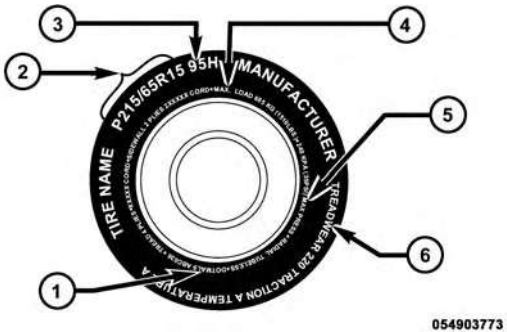

1 — U.S. DOT Safety Standards Code (TIN)
2 — Size Designation
3 — Service Description
4 — Maximum Load
5 — Maximum Pressure
6 — Treadwear, Traction and Temperature Grades

NOTE:

- P (Passenger) - Metric tire sizing is based on U.S. design standards. P-Metric tires have the letter "P" molded into the sidewall preceding the size designation. Example: P215/65R15 95H.
- European-Metric tire sizing is based on European design standards. Tires designed to this standard have the tire size molded into the sidewall beginning with the section width. The letter "P" is absent from this tire size designation. Example: 215/65R15 96H.
- LT (Light Truck) - Metric tire sizing is based on U.S. design standards. The size designation for LT-Metric tires is the same as for P-Metric tires except for the letters "LT" that are molded into the sidewall preceding the size designation. Example: LT235/85R16.
- Temporary spare tires are spares designed for temporary emergency use only. Temporary high pressure compact spare tires have the letter "T" or "S" molded into the sidewall preceding the size designation. Example: T145/80D18 103M.
- High flotation tire sizing is based on U.S. design standards and it begins with the tire diameter molded into the sidewall. Example: 31x10.5 R15 LT.

Tire Sizing Chart

EXAMPLE:
Size Designation:
P = Passenger car tire size based on U.S. design standards **"....blank...."** = Passenger car tire based on European design standards **LT** = Light truck tire based on U.S. design standards **T or S** = Temporary spare tire **31** = Overall diameter in inches (in)
215 = Section width in millimeters (mm)
65 = Aspect ratio in percent (%) — Ratio of section height to section width of tire **10.5** = Section width in inches (in)
R = Construction code — "R" means radial construction — "D" means diagonal or bias construction
15 = Rim diameter in inches (in)

EXAMPLE:
Service Description:
95 = Load Index — A numerical code associated with the maximum load a tire can carry
H = Speed Symbol — A symbol indicating the range of speeds at which a tire can carry a load corresponding to its load index under certain operating conditions — The maximum speed corresponding to the speed symbol should only be achieved under specified operating conditions (i.e., tire pressure, vehicle loading, road conditions, and posted speed limits)
Load Identification:
"....blank...." = Absence of any text on the sidewall of the tire indicates a Standard Load (SL) tire
Extra Load (XL) = Extra load (or reinforced) tire
Light Load (LL) = Light load tire
C, D, E, F, G = Load range associated with the maximum load a tire can carry at a specified pressure
Maximum Load— Maximum load indicates the maximum load this tire is designed to carry
Maximum Pressure— Maximum pressure indicates the maximum permissible cold tire inflation pressure for this tire

Tire Identification Number (TIN)

The TIN may be found on one or both sides of the tire, however, the date code may only be on one side. Tires with white sidewalls will have the full TIN, including the date code, located on the white sidewall side of the tire. Look for the TIN on the outboard side of black sidewall tires as mounted on the vehicle. If the TIN is not found on the outboard side, then you will find it on the inboard side of the tire.

EXAMPLE:
DOT MA L9 ABCD 0301
DOT = Department of Transportation — This symbol certifies that the tire is in compliance with the U.S. Department of Transportation tire safety standards and is approved for highway use
MA = Code representing the tire manufacturing location (two digits)
L9 = Code representing the tire size (two digits)

EXAMPLE:
DOT MA L9 ABCD 0301
ABCD = Code used by the tire manufacturer (one to four digits)
03 = Number representing the week in which the tire was manufactured (two digits) — 03 means the 3rd week
01 = Number representing the year in which the tire was manufactured (two digits) — 01 means the year 2001 — Prior to July 2000, tire manufacturers were only required to have one number to represent the year in which the tire was manufactured. Example: 031 could represent the 3rd week of 1981 or 1991

Tire Terminology And Definitions

Term	Definition
B-Pillar	The vehicle B-Pillar is the structural member of the body located behind the front door.
Cold Tire Inflation Pressure	Cold tire inflation pressure is defined as the tire pressure after the vehicle has not been driven for at least 3 hours, or driven less than 1 mile (1.6 km) after sitting for a three hour period. Inflation pressure is measured in units of PSI (pounds per square inch) or kPa (kilopascals).
Maximum Inflation Pressure	The maximum inflation pressure is the maximum permissible cold tire inflation pressure for this tire. The maximum inflation pressure is molded into the sidewall.
Recommended Cold Tire Inflation Pressure	Vehicle manufacturer's recommended cold tire inflation pressure as shown on the tire placard.
Tire Placard	A paper label permanently attached to the vehicle describing the vehicle's loading capacity, the original equipment tire sizes and the recommended cold tire inflation pressures.

Tire Loading And Tire Pressure

Tire And Loading Information Placard Location

NOTE: The proper cold tire inflation pressure is listed on the driver's side B-Pillar or the rear edge of the driver's side door.

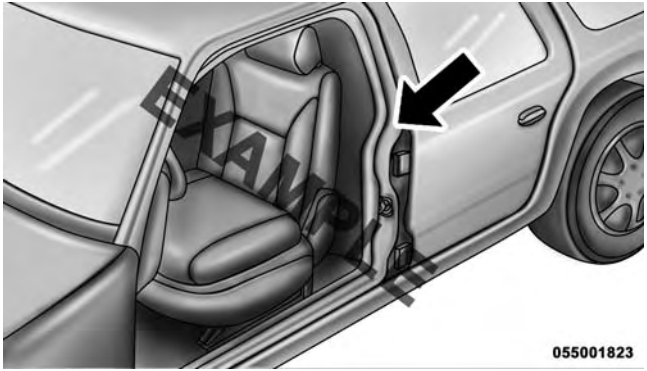

B-Pillar Location for Tire And Loading Information Placard

Tire And Loading Information Placard

Tire and Loading Information Placard

This placard tells you important information about the:

1) number of people that can be carried in the vehicle

2) total weight your vehicle can carry

3) tire size designed for your vehicle

4) cold tire inflation pressures for the front, rear, and spare tires.

Loading

The vehicle maximum load on the tire must not exceed the load carrying capacity of the tire on your vehicle. You will not exceed the tire's load carrying capacity if you adhere to the loading conditions, tire size, and cold tire inflation pressures specified on the Tire and Loading Information placard and in the "Vehicle Loading" section of this manual.

NOTE: Under a maximum loaded vehicle condition, gross axle weight ratings (GAWRs) for the front and rear axles must not be exceeded. For further information on GAWRs, vehicle loading, and trailer towing, refer to "Vehicle Loading" in this section.

To determine the maximum loading conditions of your vehicle, locate the statement "The combined weight of occupants and cargo should never exceed XXX lbs or XXX kg" on the Tire and Loading Information placard. The combined weight of occupants, cargo/luggage and trailer tongue weight (if applicable) should never exceed the weight referenced here.

Steps For Determining Correct Load Limit

1. Locate the statement "The combined weight of occupants and cargo should never exceed XXX lbs or XXX kg" on your vehicle's placard.
2. Determine the combined weight of the driver and passengers that will be riding in your vehicle.
3. Subtract the combined weight of the driver and passengers from XXX lbs or XXX kg.

4. The resulting figure equals the available amount of cargo and luggage load capacity. For example, if "XXX" amount equals 1,400 lbs (635 kg) and there will be five 150 lb (68 kg) passengers in your vehicle, the amount of available cargo and luggage load capacity is 650 lbs (295 kg) (since 5 x 150 = 750, and 1400 – 750 = 650 lbs [295 kg]).
5. Determine the combined weight of luggage and cargo being loaded on the vehicle. That weight may not safely exceed the available cargo and luggage load capacity calculated in Step 4.
6. If your vehicle will be towing a trailer, load from your trailer will be transferred to your vehicle. Consult this manual to determine how this reduces the available cargo and luggage load capacity of your vehicle.

NOTE:

- The following table shows examples on how to calculate total load, cargo/luggage, and towing capacities of your vehicle with varying seating configurations and number and size of occupants. This table is for illustration purposes only and may not be accurate for the seating and load carry capacity of your vehicle.
- For the following example, the combined weight of occupants and cargo should never exceed 865 lbs (392 kg).

Occupants			Combined weight of occupants and cargo from Tire Placard	MINUS	Combined Occupant's weight	=	AVAILABLE Cargo/Luggage and Trailer Tongue Weight
TOTAL	FRONT	REAR					
EXAMPLE 1							
5	2	3	865 lbs	minus	Occupant 1: 200 lbs Occupant 2: 130 lbs Occupant 3: 160 lbs Occupant 4: 100 lbs Occupant 5: 80 lbs TOTAL WEIGHT: 670 lbs 670 lbs	=	195 lbs
EXAMPLE 2							
3	2	1	865 lbs	minus	Occupant 1: 210 lbs Occupant 2: 180 lbs Occupant 3: 150 lbs TOTAL WEIGHT: 540 lbs 540 lbs	=	325 lbs
EXAMPLE 3							
2	2	0	865 lbs	minus	Occupant 1: 200 lbs Occupant 2: 200 lbs TOTAL WEIGHT: 400 lbs 400 lbs	=	465 lbs

EXAMPLE

811a4d11

WARNING!

Overloading of your tires is dangerous. Overloading can cause tire failure, affect vehicle handling, and increase your stopping distance. Use tires of the recommended load capacity for your vehicle. Never overload them.

TIRES — GENERAL INFORMATION

Tire Pressure

Proper tire inflation pressure is essential to the safe and satisfactory operation of your vehicle. Three primary areas are affected by improper tire pressure:

Safety

WARNING!

- **Improperly inflated tires are dangerous and can cause collisions.**
- **Under-inflation increases tire flexing and can result in over-heating and tire failure.**
- **Over-inflation reduces a tire's ability to cushion shock. Objects on the road and chuckholes can cause damage that result in tire failure.**
- **Over-inflated or under-inflated tires can affect vehicle handling and can fail suddenly, resulting in loss of vehicle control.**
- **Unequal tire pressures can cause steering problems. You could lose control of your vehicle.**

(Continued)

WARNING! ***(Continued)***

- **Unequal tire pressures from one side of the vehicle to the other can cause the vehicle to drift to the right or left.**
- **Always drive with each tire inflated to the recommended cold tire inflation pressure.**

Economy

Improper inflation pressures can cause uneven wear patterns to develop across the tire tread. These abnormal wear patterns will reduce tread life resulting in a need for earlier tire replacement. Under-inflation also increases tire rolling resistance resulting in higher fuel consumption.

Ride Comfort And Vehicle Stability

Proper tire inflation contributes to a comfortable ride. Over-inflation produces a jarring and uncomfortable ride. Both under-inflation and over-inflation affect the stability of the vehicle and can produce a feeling of sluggish response or over responsiveness in the steering.

Unequal tire pressures from side to side may cause erratic and unpredictable steering response.

Unequal tire pressure from side to side may cause the vehicle to drift left or right.

Tire Inflation Pressures

The proper cold tire inflation pressure is listed on the driver's side "B" Pillar or rear edge of the driver's side door.

At least once a month:

- Check and adjust tire pressure with a good quality pocket-type pressure gauge. Do not make a visual judgement when determining proper inflation. Tires may look properly inflated even when they are under-inflated.
- Inspect tires for signs of tire wear or visible damage.

CAUTION!

After inspecting or adjusting the tire pressure, always reinstall the valve stem cap. This will prevent moisture and dirt from entering the valve stem, which could damage the valve stem.

Inflation pressures specified on the placard are always "cold tire inflation pressure." Cold tire inflation pressure is defined as the tire pressure after the vehicle has not been driven for at least three hours, or driven less than 1 mile (1.6 km) after a three hour period. The cold tire inflation pressure must not exceed the maximum inflation pressure molded into the tire sidewall.

Check tire pressures more often if subject to a wide range of outdoor temperatures, as tire pressures vary with temperature changes.

Tire pressures change by approximately 1 psi (7 kPa) per 12°F (7°C) of air temperature change. Keep this in mind when checking tire pressure inside a garage, especially in the winter.

Example: If garage temperature = 68°F (20°C) and the outside temperature = 32°F (0°C) then the cold tire inflation pressure should be increased by 3 psi (21 kPa), which equals 1 psi (7 kPa) for every 12°F (7°C) for this outside temperature condition.

Tire pressure may increase from 2 to 6 psi (13 to 40 kPa) during operation. DO NOT reduce this normal pressure build up or your tire pressure will be too low.

Tire Pressures For High Speed Operation

The manufacturer advocates driving at safe speeds and within posted speed limits. Where speed limits or conditions are such that the vehicle can be driven at high speeds, maintaining correct tire inflation pressure is very important. Increased tire pressure and reduced vehicle loading may be required for high-speed vehicle operation. Refer to your authorized tire or original equipment vehicle dealer for recommended safe operating speeds, loading and cold tire inflation pressures.

WARNING!

High speed driving with your vehicle under maximum load is dangerous. The added strain on your tires could cause them to fail. You could have a serious collision. Do not drive a vehicle loaded to the maximum capacity at continuous speeds above 75 mph (120 km/h).

Radial Ply Tires

WARNING!

Combining radial ply tires with other types of tires on your vehicle will cause your vehicle to handle poorly. The instability could cause a collision. Always use radial ply tires in sets of four. Never combine them with other types of tires.

Tire Repair

If your tire becomes damaged, it may be repaired if it meets the following criteria:

- The tire has not been driven on when flat,
- The damage is only on the tread section of your tire (sidewall damage is not repairable) and
- The puncture is no greater than ¼″ (6 mm)

Consult an authorized tire dealer for tire repairs and additional information.

Damaged Run Flat tires, or Run Flat tires that have experienced a loss of pressure should be replaced immediately with another Run Flat tire of identical size and service description (Load Index and Speed Code).

Tire Types

All Season Tires – If Equipped

All Season tires provide traction for all seasons (spring, summer, fall and winter). Traction levels may vary between different all season tires. All season tires can be identified by the M+S, M&S, M/S or MS designation on the tire sidewall. Use all season tires only in sets of four; failure to do so may adversely affect the safety and handling of your vehicle.

Summer Or Three Season Tires – If Equipped

Summer tires provide traction in both wet and dry conditions, and are not intended to be driven in snow or on ice. Summer tires will not contain the all season designation or mountain/snowflake symbol on the tire sidewall. Use summer tires only in sets of four; failure to do so may adversely affect the safety and handling of your vehicle.

Snow Tires

Some areas of the country require the use of snow tires during the winter. Snow tires can be identified by a mountain/snowflake symbol on the tire sidewall.

If you need snow tires, select tires equivalent in size and type to the original equipment tires. Use snow tires only in sets of four; failure to do so may adversely affect the safety and handling of your vehicle.

Snow tires generally have lower speed ratings than what was originally equipped with your vehicle and should not be operated at sustained speeds over 75 mph (120 km/h). For speeds above 75 mph (120 km/h) refer to original equipment or an authorized tire dealer for recommended safe operating speeds, loading and cold tire inflation pressures.

While studded tires improve performance on ice, skid and traction capability on wet or dry surfaces may be poorer than that of non-studded tires. Some states prohibit studded tires; therefore, local laws should be checked before using these tire types.

Run Flat Tires – If Equipped

Run Flat tires allow you the capability to drive 50 miles (80 km) at 50 mph (80 km/h) after a rapid loss of inflation pressure. This rapid loss of inflation is referred to as the run flat mode. A run flat mode occurs when the tire inflation pressure is of/or below 14 psi (96 kPa). Once a Run Flat tire reaches the run flat mode it has limited driving capabilities and needs to be replaced immediately. A Run Flat tire is not repairable.

It is not recommended driving a vehicle loaded at full capacity or to tow a trailer while a tire is in the run flat mode.

See the Tire Pressure Monitoring Section for more information.

Spare Tires – If Equipped

NOTE: For vehicles equipped with TIREFIT instead of a spare tire, please refer to "TIREFIT KIT" in What To Do In Emergencies for further information.

CAUTION!

Because of the reduced ground clearance, do not take your vehicle through an automatic car wash with a compact, full size or limited-use temporary spare installed. Damage to the vehicle may result.

Spare Tire Matching Original Equipped Tire And Wheel – If Equipped

Your vehicle may be equipped with a spare tire and wheel equivalent in look and function to the original equipment tire and wheel found on the front or rear axle of your vehicle. This spare tire may be used in the tire rotation for your vehicle. If your vehicle has this option refer to an authorized tire dealer for the recommended tire rotation pattern.

Compact Spare Tire – If Equipped

The compact spare is for temporary emergency use only. You can identify if your vehicle is equipped with a compact spare by looking at the spare tire description on the Tire and Loading Information Placard located on the driver's side door opening or on the sidewall of the tire. Compact spare tire descriptions begin with the letter "T" or "S" preceding the size designation. Example: T145/80D18 103M.

T, S = Temporary Spare Tire

Since this tire has limited tread life the original equipment tire should be repaired (or replaced) and reinstalled on your vehicle at the first opportunity.

Do not install a wheel cover or attempt to mount a conventional tire on the compact spare wheel, since the wheel is designed specifically for the compact spare tire. Do not install more than one compact spare tire and wheel on the vehicle at any given time.

WARNING!

Compact spares are for temporary emergency use only. With these spares, do not drive more than 50 mph (80 km/h). Temporary use spares have limited tread life. When the tread is worn to the tread wear indicators, the temporary use spare tire needs to be replaced. Be sure to follow the warnings, which apply to your spare. Failure to do so could result in spare tire failure and loss of vehicle control.

Full Size Spare – If Equipped

The full size spare is for temporary emergency use only. This tire may look like the originally equipped tire on the front or rear axle of your vehicle, but it is not. This spare tire may have limited tread life. When the tread is worn to the tread wear indicators, the temporary use full size spare tire needs to be replaced. Since it is not the same as your original equipment tire, replace (or repair) the original equipment tire and reinstall on the vehicle at the first opportunity.

Limited-Use Spare – If Equipped

The limited-use spare tire is for temporary emergency use only. This tire is identified by a label located on the limited-use spare wheel. This label contains the driving limitations for this spare. This tire may look like the original equipped tire on the front or rear axle of your vehicle, but it is not. Installation of this limited-use spare tire affects vehicle handling. Since it is not the same as your original equipment tire, replace (or repair) the original equipment tire and reinstall on the vehicle at the first opportunity.

WARNING!

Limited-use spares are for emergency use only. Installation of this limited-use spare tire affects vehicle handling. With this tire, do not drive more than the speed listed on the limit-use spare wheel. Keep inflated to the cold tire inflation pressures listed on your Tire and Loading Information Placard located on the driver's side B-Pillar or the rear edge of the driver's side door. Replace (or repair) the original equipment tire at the first opportunity and reinstall it on your vehicle. Failure to do so could result in loss of vehicle control.

Tire Spinning

When stuck in mud, sand, snow, or ice conditions, do not spin your vehicle's wheels above 30 mph (48 km/h) or for longer than 30 seconds continuously without stopping when you are stuck.

Refer to "Freeing A Stuck Vehicle" in "What To Do In Emergencies" for further information.

WARNING!

Fast spinning tires can be dangerous. Forces generated by excessive wheel speeds may cause tire damage or failure. A tire could explode and injure someone. Do not spin your vehicle's wheels faster than 30 mph (48 km/h) for more than 30 seconds continuously when you are stuck, and do not let anyone near a spinning wheel, no matter what the speed.

Tread Wear Indicators

Tread wear indicators are in the original equipment tires to help you in determining when your tires should be replaced.

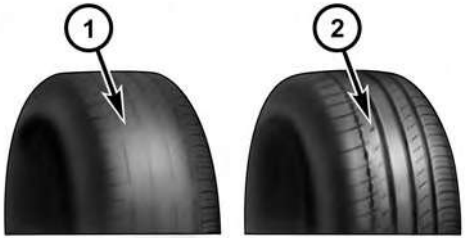

055007576

1 — Worn Tire
2 — New Tire

These indicators are molded into the bottom of the tread grooves. They will appear as bands when the tread depth becomes 1/16 in (2 mm). When the tread is worn to the tread wear indicators, the tire should be replaced. Refer to replacement tires in this section for further information.

Life Of Tire

The service life of a tire is dependent upon varying factors including, but not limited to:

- Driving style
- Tire pressure
- Distance driven
- Performance tires, tires with a speed rating of V or higher, and summer tires typically have a reduced tread life. Rotation of these tires per the vehicle maintenance schedule is highly recommended.

WARNING!

Tires and the spare tire should be replaced after six years, regardless of the remaining tread. Failure to follow this warning can result in sudden tire failure. You could lose control and have a collision resulting in serious injury or death.

Keep dismounted tires in a cool, dry place with as little exposure to light as possible. Protect tires from contact with oil, grease, and gasoline.

Replacement Tires

The tires on your new vehicle provide a balance of many characteristics. They should be inspected regularly for wear and correct cold tire inflation pressure. The manufacturer strongly recommends that you use tires equivalent to the originals in size, quality and performance when replacement is needed. Refer to the paragraph on "Tread Wear Indicators". Refer to the Tire and Loading Information placard or the Vehicle Certification Label for the size designation of your tire. The Load Index and Speed Symbol for your tire will be found on the original equipment tire sidewall. See the Tire Sizing Chart example found in the Tire Safety Information section of this manual for more information relating to the Load Index and Speed Symbol of a tire.

It is recommended to replace the two front tires or two rear tires as a pair. Replacing just one tire can seriously affect your vehicle's handling. If you ever replace a wheel, make sure that the wheel's specifications match those of the original wheels.

It is recommended you contact your authorized tire or original equipment dealer with any questions you may have on tire specifications or capability. Failure to use equivalent replacement tires may adversely affect the safety, handling, and ride of your vehicle.

WARNING!

- **Do not use a tire, wheel size or rating other than that specified for your vehicle. Some combinations of unapproved tires and wheels may change suspension dimensions and performance characteristics, resulting in changes to steering, handling, and braking of your vehicle. This can cause unpredictable handling and stress to steering and suspension components. You could lose control and have a collision resulting in serious injury or death. Use only the tire and wheel sizes with load ratings approved for your vehicle.**
- **Never use a tire with a smaller load index or capacity, other than what was originally equipped on your vehicle. Using a tire with a smaller load index could result in tire overloading and failure. You could lose control and have a collision.**

(Continued)

WARNING! ***(Continued)***

- **Failure to equip your vehicle with tires having adequate speed capability can result in sudden tire failure and loss of vehicle control.**

CAUTION!

Replacing original tires with tires of a different size may result in false speedometer and odometer readings.

SUPPLEMENTAL TIRE PRESSURE INFORMATION — IF EQUIPPED

A light load vehicle condition is defined as two passengers [150 lbs (68 kg) each] plus 200 lbs (91 kg) of cargo. Cold tire inflation pressures for a lightly loaded vehicle will be found on the face of the driver's door.

TIRE CHAINS (TRACTION DEVICES)

Use of traction devices require sufficient tire-to-body clearance. Follow these recommendations to guard against damage.

- Traction device must be of proper size for the tire, as recommended by the traction device manufacturer.

Please follow the table below for proper tire size, chain type, and axle recommendations:

Vehicle	Axle Recommendations	Tire Sizes	Chain Class
1500 Models	Rear Only	P265/70R17	S Class
2500 Models	Rear Only	LT245/70R17E LT265/70R18E LT275/70R18E	U Class
2500 Power Wagon Models	Rear Only	LT285/70R17D	U Class
3500 (Single Rear Wheel) Models	Rear Only	LT265/70R18E LT275/70R18E	U Class
3500 (Dual Rear Wheel) Models	Front/Rear	LT235/80R17E	U Class

WARNING!

Using tires of different size and type (M+S, Snow) between front and rear axles can cause unpredictable handling. You could lose control and have a collision.

CAUTION!

To avoid damage to your vehicle or tires, observe the following precautions:

- **Because of restricted traction device clearance between tires and other suspension components, it is important that only traction devices in good condition are used. Broken devices can cause serious damage. Stop the vehicle immediately if noise occurs that could indicate device breakage. Remove the damaged parts of the device before further use.**

(Continued)

CAUTION! ***(Continued)***

- **Install device as tightly as possible and then retighten after driving about ½ mile (0.8 km).**
- **Do not exceed 30 mph (48 km/h).**
- **Drive cautiously and avoid severe turns and large bumps, especially with a loaded vehicle.**
- **Do not drive for prolonged period on dry pavement.**
- **Observe the traction device manufacturer's instructions on the method of installation, operating speed, and conditions for use. Always use the suggested operating speed of the device manufacturer's if it is less than 30 mph (48 km/h).**
- **Do not use traction devices on a compact spare tire.**

TIRE ROTATION RECOMMENDATIONS

Tires on the front and rear axles of vehicles operate at different loads and perform different steering, driving, and braking functions. For these reasons, they wear at unequal rates.

These effects can be reduced by timely rotation of tires. The benefits of rotation are especially worthwhile with aggressive tread designs such as those on all season type tires. Rotation will increase tread life, help to maintain mud, snow and wet traction levels and contribute to a smooth, quiet ride.

Refer to the "Maintenance Schedule" for the proper maintenance intervals. More frequent rotation is permissible if desired. The reasons for any rapid or unusual wear should be corrected prior to rotation being performed.

The suggested rotation method is the "forward cross" shown in the following diagram. This rotation pattern does not apply to some directional tires that must not be reversed.

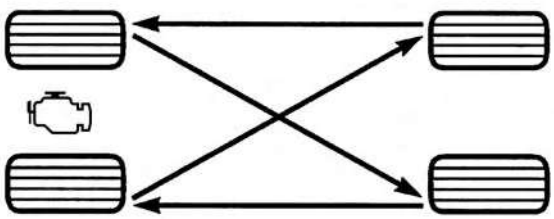

Tire Rotation

Directional Tires – If Equipped

For the R/T package with 22″ tires and wheels, the rotational direction of the tire must be taken into consideration when rotating the tires. The recommended rotation pattern for directional tires is shown below.

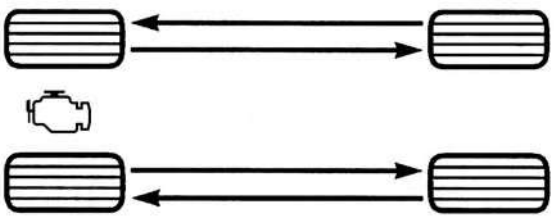

Tire Rotation

Dual Rear Wheels – If Equipped

The tires used on dual wheel assemblies should be matched for wear to prevent overloading one tire in a set. To check if tires are even, lay a straight edge across all four tires. The straight edge should touch all the tires.

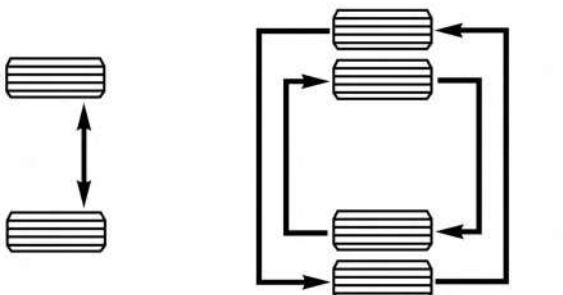

Tire Rotation

CAUTION!

3500 Dual Rear Tires may only have one approved direction of rotation. This is to accommodate the asymmetrical design (tread pattern) of the On/Off-Road tire and the use of Outline White Letter (OWL) tires.

- **When replacing a flat, the spare tire may have to be remounted on the rim, or installed at a different location, to maintain the correct placement of the tire on the wheel relative to the tire/wheel position on the truck. For example, if the spare is used to replace an outer rear tire it will have to be remounted on the rim so that the wheel is dished inward. That way the tread design of asymmetrical tires and the white writing of the OWL tires will maintain proper position.**

TIRE PRESSURE MONITOR SYSTEM (TPMS)

The Tire Pressure Monitor System (TPMS) will warn the driver of a low tire pressure based on the vehicle recommended cold placard pressure.

The tire pressure will vary with temperature by about 1 psi (6.9 kPa) for every 12°F (6.5°C). This means that when the outside temperature decreases, the tire pressure will decrease. Tire pressure should always be set based on cold inflation tire pressure. This is defined as the tire pressure after the vehicle has not been driven for at least three hours, or driven less than 1 mile (1.6 km) after a three hour period. The cold tire inflation pressure must not exceed the maximum inflation pressure molded into the tire sidewall. Refer to “Tires – General Information” in “Starting and Operating” for information on how to properly inflate the vehicle’s tires. The tire pressure will

also increase as the vehicle is driven - this is normal and there should be no adjustment for this increased pressure.

The TPMS will warn the driver of a low tire pressure if the tire pressure falls below the low-pressure warning limit for any reason, including low temperature effects and natural pressure loss through the tire.

The TPMS will continue to warn the driver of low tire pressure as long as the condition exists, and will not turn off until the tire pressure is at or above the recommended cold placard pressure. Once the low tire pressure warning (Tire Pressure Monitoring [TPM] Telltale Light) illuminates, you must increase the tire pressure to the recommended cold placard pressure in order for the "Tire Pressure Monitoring Telltale Light" to turn off. The system will automatically update and the "Tire Pressure Monitoring Telltale Light" will turn off once the system receives the updated tire pressures. The vehicle may need to be driven for up to 20 minutes above 15 mph (25 km/h) in order for the TPMS to receive this information.

For example, your vehicle may have a recommended cold (parked for more than three hours) placard pressure of 30 psi (207 kPa). If the ambient temperature is 68°F (20°C) and the measured tire pressure is 27 psi (186 kPa), a temperature drop to 20°F (-7°C) will decrease the tire pressure to approximately 23 psi (158 kPa). This tire pressure is sufficiently low enough to turn ON the "Tire Pressure Monitoring Telltale Light." Driving the vehicle may cause the tire pressure to rise to approximately 27 psi (186 kPa), but the "Tire Pressure Monitoring Telltale Light" will still be ON. In this situation, the "Tire Pressure Monitoring Telltale Light" will turn OFF only after the tires are inflated to the vehicle's recommended cold placard pressure value.

CAUTION!

- **The TPMS has been optimized for the original equipment tires and wheels. TPMS pressures and warning have been established for the tire size equipped on your vehicle. Undesirable system operation or sensor damage may result when using replacement equipment that is not of the same size, type, and/or style. Aftermarket wheels can cause sensor damage. Do not use aftermarket tire sealants or balance beads if your vehicle is equipped with a TPMS, as damage to the sensors may result.**
- **After inspecting or adjusting the tire pressure, always reinstall the valve stem cap. This will prevent moisture and dirt from entering the valve stem, which could damage the TPM sensor.**

NOTE:

- The TPMS is not intended to replace normal tire care and maintenance or to provide warning of a tire failure or condition.
- The TPMS should not be used as a tire pressure gauge while adjusting your tire pressure.
- Driving on a significantly under-inflated tire causes the tire to overheat and can lead to tire failure. Under-inflation also reduces fuel efficiency and tire tread life, and may affect the vehicle's handling and stopping ability.

- The TPMS is not a substitute for proper tire maintenance, and it is the driver's responsibility to maintain correct tire pressure using an accurate tire pressure gauge, even if under-inflation has not reached the level to trigger illumination of the "Tire Pressure Monitoring Telltale Light."
- Seasonal temperature changes will affect tire pressure, and the TPMS will monitor the actual tire pressure in the tire.

Base System

The Tire Pressure Monitor System (TPMS) uses wireless technology with wheel rim mounted electronic sensors to monitor tire pressure levels. Sensors mounted to each wheel as part of the valve stem transmit tire pressure readings to the receiver module.

NOTE: It is particularly important for you to check the tire pressure in all of the tires on your vehicle monthly and to maintain the proper pressure.

The TPMS consists of the following components:

- Receiver module,
- Four TPM sensors, and
- TPM Telltale Light

The matching full size spare wheel and tire assembly (if equipped) has a TPM sensor. The matching full size spare can be used in place of any of the four road tires. The TPMS will only monitor the pressure in the full size spare when it is used in place of a road tire. Otherwise, a spare with a pressure below the low-pressure limit will not cause the "Tire Pressure Monitoring Telltale Light" to illuminate or the chime to sound.

Tire Pressure Monitoring Low Pressure Warnings

The "Tire Pressure Monitoring Telltale Light" will illuminate in the instrument cluster, a "LOW TIRE PRESSURE" message will display in the EVIC, and a chime will sound when tire pressure is low in one or more of the four active road tires. An "Inflate to XX" message will also be displayed. Should this occur, you should stop as soon as possible, check the inflation pressure of each tire on your vehicle, and inflate each tire to the vehicle's recommended cold placard pressure value as shown in the "Inflate to XX" message. Once the system receives the updated tire pressures, the system will automatically update and the "Tire Pressure Monitoring Telltale Light" and "LOW TIRE PRESSURE" message will turn off. The vehicle may need to be driven for up to 20 minutes above 15 mph (25 km/h) in order for the TPMS to receive this information.

Service TPMS Warning

If a system fault is detected, the "Tire Pressure Monitoring Telltale Light" will flash on and off for 75 seconds and then remain on solid. The system fault will also sound a chime. If the ignition switch is cycled, this sequence will repeat, providing the system fault still exists. The "Tire Pressure Monitoring Telltale Light" will turn off when the fault condition no longer exists. A system fault can occur due to any of the following:

1. Signal interference due to electronic devices or driving next to facilities emitting the same radio frequencies as the TPM sensors.
2. Installing aftermarket window tinting that contains materials that may block radio wave signals.
3. Accumulation of snow or ice around the wheels or wheel housings.
4. Using tire chains on the vehicle.
5. Using wheels/tires not equipped with TPM sensors.

Vehicles with Full Size Spare

1. The matching full size spare wheel and tire assembly has a TPM sensor that can be monitored by the TPMS.
2. If you install the full size spare in place of a road tire that has a pressure below the low-pressure warning limit, upon the next ignition switch cycle, a chime will sound, a "LOW TIRE PRESSURE" message will be displayed, and the "Tire Pressure Monitoring Telltale Light" will turn ON. An "Inflate to XX" message will also be displayed.
3. Driving the vehicle for up to 20 minutes above 15 mph (24 km/h) will turn off the "Tire Pressure Monitoring Telltale Light" and "LOW TIRE PRESSURE" message, as long as no tire pressure is below the low-pressure warning limit in any of the four active road tires.

Premium System – If Equipped

The Tire Pressure Monitor System (TPMS) uses wireless technology with wheel rim mounted electronic sensors to monitor tire pressure levels. Sensors mounted to each wheel as part of the valve stem transmit tire pressure readings to the receiver module.

NOTE: It is particularly important for you to check the tire pressure in all of the tires on your vehicle monthly and to maintain the proper pressure.

The TPMS consists of the following components:

- Receiver module,
- Four TPM sensors,
- Various TPMS messages, which display in the Electronic Vehicle Information Center (EVIC), and
- TPM Telltale Light

The matching full size spare wheel and tire assembly (if equipped) has a TPM sensor. The full size spare can be used in place of any of the four road tires. A spare with a pressure below the low-pressure limit will not cause the "Tire Pressure Monitoring Telltale Light" to illuminate or the chime to sound.

Tire Pressure Monitoring Low Pressure Warnings

The "Tire Pressure Monitoring Telltale Light" will illuminate in the instrument cluster and a chime will sound when tire pressure is low in one or more of the four active road tires. In addition, the EVIC will display a "LOW TIRE PRESSURE" message for a minimum of five seconds and a graphic showing the pressure values of each tire with the low tire pressure values flashing or in a different color. An "Inflate to XX" message will also be displayed.

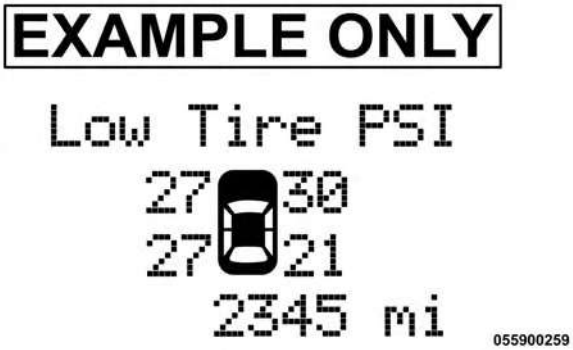

Should this occur, you should stop as soon as possible and inflate the tires with a low pressure condition (those flashing or in a different color in the EVIC graphic) to the vehicle's recommended cold placard pressure inflation value as shown in the "Inflate to XX" message. Once the system receives the updated tire pressures, the system will automatically update, the graphic display in the

EVIC will stop flashing or return to it's original color, and the "Tire Pressure Monitoring Telltale Light" will turn off. The vehicle may need to be driven for up to 20 minutes above 15 mph (24 km/h) in order for the TPMS to receive this information.

Service TPMS Warning

If a system fault is detected, the "Tire Pressure Monitoring Telltale Light" will flash on and off for 75 seconds and then remain on solid. The system fault will also sound a chime. In addition, the EVIC will display a "SERVICE TPM SYSTEM" message for a minimum of five seconds and then display dashes (- -) in place of the pressure value to indicate which sensor is not being received.

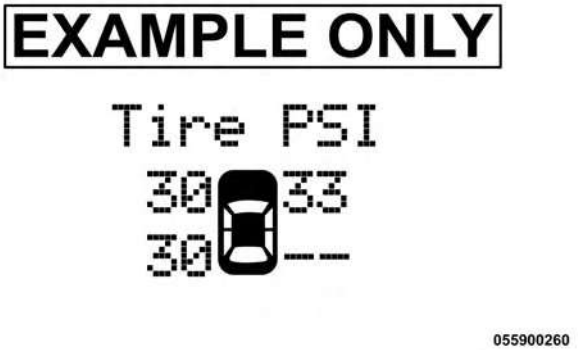

If the ignition switch is cycled, this sequence will repeat, providing the system fault still exists. If the system fault no longer exists, the "Tire Pressure Monitoring Telltale Light" will no longer flash, and the "SERVICE TPM

SYSTEM" message will no longer display, and a pressure value will display in place of the dashes. A system fault can occur due to any of the following:

1. Signal interference due to electronic devices or driving next to facilities emitting the same radio frequencies as the TPM sensors.
2. Installing aftermarket window tinting that contains materials that may block radio wave signals.
3. Accumulation of snow or ice around the wheels or wheel housings.
4. Using tire chains on the vehicle.
5. Using wheels/tires not equipped with TPM sensors.

Vehicles with Full Size Spare

1. The matching full size spare wheel and tire assembly has a TPM sensor that can be monitored by the TPMS.
2. If you install the full size spare in place of a road tire that has a pressure below the low-pressure warning limit, upon the next ignition switch cycle, a chime will sound and the "Tire Pressure Monitoring Telltale Light" will turn ON. In addition, the EVIC will display a "LOW TIRE PRESSURE" message and a graphic showing the low tire pressure value flashing or in a different color. An "Inflate to XX" message will also be displayed.
3. After driving the vehicle for up to 20 minutes above 15 mph (25 km/h) the "Tire Pressure Monitoring Telltale Light" will turn OFF and the pressure value will be updated and stop flashing or return to it's original color, as long as no tire pressure is below the low-pressure warning limit in any of the four active road tires.

Tire Pressure Information System (TPIS) 3500 Series Trucks

Your vehicle may be equipped with a Tire Pressure Information System (TPIS).

The Tire Pressure Information System (TPIS) uses wireless technology with wheel rim mounted electronic sensors to transmit tire pressure levels. Sensors mounted to each wheel as part of the valve stem transmit tire pressure readings to the receiver module.

NOTE: It is particularly important for you to check the tire pressure in all of the tires on your vehicle monthly and to maintain the proper pressure.

The TPIS consists of the following components:

- Receiver module
- Four TPM sensors (Single Rear Wheel (SRW) applications)
- Six TPM sensors (Dual Rear Wheel (DRW) applications)
- Pressure display in the Electronic Vehicle Information Center (EVIC)

The TPIS system will display all four (Single Rear Wheel (SRW) applications) or six (Dual Rear Wheel (DRW) applications) tire pressure values EVIC display.

If a system fault is detected, the EVIC will display a "SERVICE TPM SYSTEM" message for a minimum of five seconds and then display dashes (- -) in place of the pressure value to indicate which sensor is not being received.

If the ignition switch is cycled, this sequence will repeat, providing the system fault still exists. If the system fault no longer exists, the "SERVICE TPM SYSTEM" message will no longer be displayed, and a pressure value will display in place of the dashes. A system fault can occur due to any of the following:

- Signal interference due to electronic devices or driving next to facilities emitting the same radio frequencies as the TPM sensors.
- Installing aftermarket window tinting that contains materials that may block radio wave signals.
- Accumulation of snow or ice around the wheels or wheel housings.
- Using tire chains on the vehicle.
- Using wheels/tires not equipped with TPM sensors.

General Information

This device complies with Part 15 of the FCC rules and RSS 210 of Industry Canada. Operation is subject to the following conditions:

- This device may not cause harmful interference.
- This device must accept any interference received, including interference that may cause undesired operation.

The TPM sensors are regulated under one of the following licenses:

United States	GQ4-61T
Canada	1470A-42T

FUEL REQUIREMENTS

3.6L/6.4L Engine

800dfab6

These engines are designed to meet all emissions regulations and provide excellent fuel economy and performance when using high quality unleaded "regular" gasoline having an octane rating of 87. The use of premium gasoline is not recommended, as it will not provide any benefit over regular gasoline in these engines.

5.7L Engines

800dfab7

This engine is designed to meet all emissions regulations and provide satisfactory fuel economy and performance when using high quality unleaded gasoline having an octane range of 87 to 89. The manufacturer recommends the use of 89 octane for optimum performance. The use of premium gasoline is not recommended, as it will not provide any benefit over regular gasoline in these engines.

Light spark knock at low engine speeds is not harmful to your engine. However, continued heavy spark knock at high speeds can cause damage and immediate service is required. Poor quality gasoline can cause problems such as hard starting, stalling, and hesitations. If you experience these symptoms, try another brand of gasoline before considering service for the vehicle.

Over 40 auto manufacturer's world wide have issued and endorsed consistent gasoline specifications (the Worldwide Fuel Charter, WWFC) which define fuel properties necessary to deliver enhanced emissions, performance, and durability for your vehicle. The manufacturer recommends the use of gasolines that meet the WWFC specifications, if they are available.

Reformulated Gasoline

Many areas of the country require the use of cleaner burning gasoline referred to as "Reformulated Gasoline." Reformulated gasolines contain oxygenates and are specifically blended to reduce vehicle emissions and improve air quality.

The manufacturer supports the use of reformulated gasolines. Properly blended reformulated gasolines will provide excellent performance and durability of engine and fuel system components.

Gasoline/Oxygenate Blends

Some fuel suppliers blend unleaded gasoline with oxygenates such as 10% ethanol, MTBE, and ETBE. Oxygenates are required in some areas of the country during the winter months to reduce carbon monoxide emissions. Fuels blended with these oxygenates may be used in your vehicle.

CAUTION!

Do not use gasolines containing Methanol or Ethanol. Use of these blends may result in starting and driveability problems and may damage critical fuel system components.

Problems that result from using methanol/gasoline or E-85 ethanol blends are not the responsibility of the manufacturer. While MTBE is an oxygenate made from methanol, it does not have the negative effects of methanol.

E-85 Usage In Non-Flex Fuel Vehicles

Non-FFV vehicles are compatible with gasoline containing 10% ethanol (E10). Gasoline with higher ethanol content may void the New Vehicle Limited Warranty.

If a Non-FFV vehicle is inadvertently fueled with E-85 fuel, the engine will have some or all of these symptoms:

- operate in a lean mode
- OBD II “Malfunction Indicator Light” on
- poor engine performance
- poor cold start and cold drivability
- increased risk for fuel system component corrosion

To fix a Non-FFV vehicle inadvertently fueled once with E-85 perform the following:

- drain the fuel tank (see your authorized dealer)
- change the engine oil and oil filter
- disconnect and reconnect the battery to reset the engine controller memory

More extensive repairs will be required for prolonged exposure to E-85 fuel.

MMT In Gasoline

MMT (Methylcyclopentadienyl Manganese Tricarbonyl) is a manganese-containing metallic additive that is blended into some gasoline to increase octane. Gasoline blended with MMT provides no performance advantage beyond gasoline of the same octane number without MMT. Gasoline blended with MMT reduces spark plug life and reduces emissions system performance in some vehicles. The manufacturer recommends that gasoline without MMT be used in your vehicle. The MMT content of gasoline may not be indicated on the gasoline pump, therefore, you should ask your gasoline retailer whether the gasoline contains MMT. MMT is prohibited in Federal and California reformulated gasoline.

Materials Added To Fuel

All gasoline sold in the United States is required to contain effective detergent additives. Use of additional detergents or other additives is not needed under normal

conditions and they would result in additional cost. Therefore, you should not have to add anything to the fuel.

Fuel System Cautions

CAUTION!

Follow these guidelines to maintain your vehicle's performance:

- **The use of leaded gas is prohibited by Federal law. Using leaded gasoline can impair engine performance and damage the emissions control system.**

(Continued)

CAUTION! ***(Continued)***

- **An out-of-tune engine or certain fuel or ignition malfunctions can cause the catalytic converter to overheat. If you notice a pungent burning odor or some light smoke, your engine may be out of tune or malfunctioning and may require immediate service. Contact your authorized dealer for service assistance.**
- **The use of fuel additives, which are now being sold as octane enhancers, is not recommended. Most of these products contain high concentrations of methanol. Fuel system damage or vehicle performance problems resulting from the use of such fuels or additives is not the responsibility of the manufacturer.**

NOTE: Intentional tampering with the emissions control system can result in civil penalties being assessed against you.

Carbon Monoxide Warnings

WARNING!

Carbon monoxide (CO) in exhaust gases is deadly. Follow the precautions below to prevent carbon monoxide poisoning:

- **Do not inhale exhaust gases. They contain carbon monoxide, a colorless and odorless gas, which can kill. Never run the engine in a closed area, such as a garage, and never sit in a parked vehicle with the engine running for an extended period. If the vehicle is stopped in an open area with the engine running for more than a short period, adjust the ventilation system to force fresh, outside air into the vehicle.**

(Continued)

WARNING! ***(Continued)***

- **Guard against carbon monoxide with proper maintenance. Have the exhaust system inspected every time the vehicle is raised. Have any abnormal conditions repaired promptly. Until repaired, drive with all side windows fully open.**

ADDING FUEL

The fuel filler cap (gas cap) is located behind the fuel filler door, on the left side of the vehicle. Open the fuel door and remove the fuel cap by turning it counterclockwise.

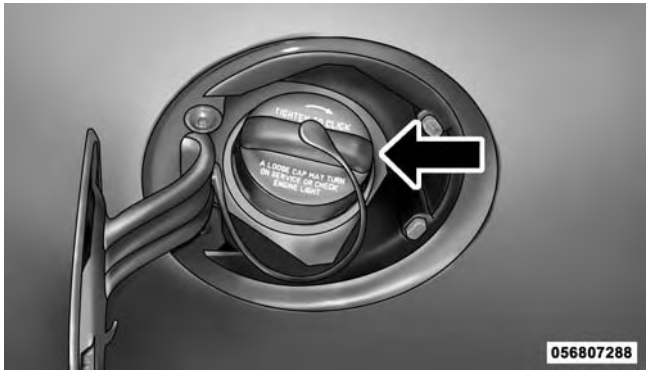

Fuel Filler Cap

NOTE: When removing the fuel filler cap, lay the cap tether in the hook, located on the fuel filler door.

CAUTION!

- **Damage to the fuel system or emissions control system could result from using an improper fuel tank filler tube cap (gas cap).**
- **A poorly fitting gas cap could let impurities into the fuel system.**
- **A poorly fitting gas cap may cause the "Malfunction Indicator Light (MIL)" to turn on.**
- **To avoid fuel spillage and overfilling, do not "top off" the fuel tank after filling. When the fuel nozzle "clicks" or shuts off, the fuel tank is full.**

WARNING!

- **Never have any smoking materials lit in or near the vehicle when the gas cap is removed or the tank is being filled.**

(Continued)

WARNING! ***(Continued)***

- **Never add fuel to the vehicle when the engine is running.**
- **A fire may result if gasoline is pumped into a portable container that is inside of a vehicle. You could be burned. Always place gas containers on the ground while filling.**

NOTE:

- Tighten the gas cap until you hear a "clicking" sound. This is an indication that the gas cap is tightened properly. The MIL in the instrument cluster may turn on if the gas cap is not secured properly. Make sure that the gas cap is tightened each time the vehicle is refueled.
- When the fuel nozzle "clicks" or shuts off, the fuel tank is full.

WARNING!

Static electricity can cause an ignition of flammable liquid, vapor or gas in any vehicle or trailer. To reduce risk of serious injury or death when filling containers:

- **Always place container on the ground before filling.**
- **Keep the pump nozzle in contact with the container when you are filling it.**
- **Use only approved containers for flammable liquid.**
- **Do not leave container unattended while filling.**
- **A static electric charge could cause a spark and fire hazard.**

Loose Fuel Filler Cap Message

If the vehicle diagnostic system determines that the fuel filler cap is loose, improperly installed, or damaged, a loose gascap indicator will display in the EVIC telltale display area. Refer to “Electronic Vehicle Information Center (EVIC) in “Understanding Your Instrument Panel” for further information. Tighten the fuel filler cap properly and press the SELECT button to turn off the message. If the problem continues, the message will appear the next time the vehicle is started.

VEHICLE LOADING

Certification Label

As required by National Highway Traffic Safety Administration regulations, your vehicle has a certification label affixed to the driver’s side door or pillar.

This label contains the month and year of manufacture, Gross Vehicle Weight Rating (GVWR), Gross Axle Weight Rating (GAWR) front and rear, and Vehicle Identification Number (VIN). A Month-Day-Hour (MDH) number is included on this label and indicates the Month, Day and Hour of manufacture. The bar code that appears on the bottom of the label is your VIN.

Gross Vehicle Weight Rating (GVWR)

The GVWR is the total permissible weight of your vehicle including driver, passengers, vehicle, options and cargo. The label also specifies maximum capacities of front and rear axle systems (GAWR). Total load must be limited so GVWR and front and rear GAWR are not exceeded.

Payload

The payload of a vehicle is defined as the allowable load weight a truck can carry, including the weight of the driver, all passengers, options and cargo.

Gross Axle Weight Rating (GAWR)

The GAWR is the maximum permissible load on the front and rear axles. The load must be distributed in the cargo area so that the GAWR of each axle is not exceeded.

Each axle GAWR is determined by the components in the system with the lowest load carrying capacity (axle, springs, tires or wheels). Heavier axles or suspension components sometimes specified by purchasers for increased durability does not necessarily increase the vehicle's GVWR.

Tire Size

The tire size on the Vehicle Certification Label represents the actual tire size on your vehicle. Replacement tires must be equal to the load capacity of this tire size.

Rim Size

This is the rim size that is appropriate for the tire size listed.

Inflation Pressure

This is the cold tire inflation pressure for your vehicle for all loading conditions up to full GAWR.

Curb Weight

The curb weight of a vehicle is defined as the total weight of the vehicle with all fluids, including vehicle fuel, at full capacity conditions, and with no occupants or cargo loaded into the vehicle. The front and rear curb weight values are determined by weighing your vehicle on a commercial scale before any occupants or cargo are added.

Loading

The actual total weight and the weight of the front and rear of your vehicle at the ground can best be determined by weighing it when it is loaded and ready for operation.

The entire vehicle should first be weighed on a commercial scale to insure that the GVWR has not been exceeded.

The weight on the front and rear of the vehicle should then be determined separately to be sure that the load is properly distributed over the front and rear axle. Weighing the vehicle may show that the GAWR of either the front or rear axles has been exceeded but the total load is within the specified GVWR. If so, weight must be shifted from front to rear or rear to front as appropriate until the specified weight limitations are met. Store the heavier items down low and be sure that the weight is distributed equally. Stow all loose items securely before driving.

Improper weight distributions can have an adverse effect on the way your vehicle steers and handles and the way the brakes operate.

CAUTION!

Do not load your vehicle any heavier than the GVWR or the maximum front and rear GAWR. If you do,

(Continued)

CAUTION! ***(Continued)***

parts on your vehicle can break, or it can change the way your vehicle handles. This could cause you to lose control. Also overloading can shorten the life of your vehicle.

TRAILER TOWING

In this section you will find safety tips and information on limits to the type of towing you can reasonably do with your vehicle. Before towing a trailer, carefully review this information to tow your load as efficiently and safely as possible.

To maintain the New Vehicle Limited Warranty coverage, follow the requirements and recommendations in this manual concerning vehicles used for trailer towing.

Common Towing Definitions

The following trailer towing related definitions will assist you in understanding the following information:

Gross Vehicle Weight Rating (GVWR)

The GVWR is the total allowable weight of your vehicle. This includes driver, passengers, cargo and tongue weight. The total load must be limited so that you do not exceed the GVWR. Refer to "Vehicle Loading/Vehicle Certification Label" in "Starting and Operating" for further information.

Gross Trailer Weight (GTW)

The GTW is the weight of the trailer plus the weight of all cargo, consumables and equipment (permanent or temporary) loaded in or on the trailer in its "loaded and ready for operation" condition. The recommended way to measure GTW is to put your fully loaded trailer on a vehicle scale. The entire weight of the trailer must be supported by the scale.

Gross Combination Weight Rating (GCWR)

The GCWR is the total permissible weight of your vehicle and trailer when weighed in combination.

Gross Axle Weight Rating (GAWR)

The GAWR is the maximum capacity of the front and rear axles. Distribute the load over the front and rear axles evenly. Make sure that you do not exceed either front or rear GAWR. Refer to "Vehicle Loading/Vehicle Certification Label" in "Starting and Operating" for further information.

WARNING!

It is important that you do not exceed the maximum front or rear GAWR. A dangerous driving condition can result if either rating is exceeded. You could lose control of the vehicle and have an accident.

Tongue Weight (TW)

The tongue weight is the downward force exerted on the hitch ball by the trailer. In most cases it should not be less than 10% of the trailer load. You must consider this as part of the load on your vehicle.

Frontal Area

The frontal area is the maximum height multiplied by the maximum width of the front of a trailer.

Trailer Sway Control

The trailer sway control can be a mechanical telescoping link that can be installed between the hitch receiver and the trailer tongue that typically provides adjustable friction associated with the telescoping motion to dampen any unwanted trailer swaying motions while traveling.

If equipped, the electronic Trailer Sway Control (TSC) recognizes a swaying trailer and automatically applies individual wheel brakes and/or reduces engine power to attempt to eliminate the trailer sway.

Weight-Carrying Hitch

A weight-carrying hitch supports the trailer tongue weight, just as if it were luggage located at a hitch ball or some other connecting point of the vehicle. These kinds of hitches are the most popular on the market today and they are commonly used to tow small and medium sized trailers.

Weight-Distributing Hitch

A weight-distributing system works by applying leverage through spring (load) bars. They are typically used for heavier loads to distribute trailer tongue weight to the tow vehicle's front axle and the trailer axle(s). When used in accordance with the manufacturer's directions, it provides for a more level ride, offering more consistent steering and brake control, thereby enhancing towing safety. The addition of a friction/hydraulic sway control also dampens sway caused by traffic and crosswinds and contributes positively to tow vehicle and trailer stability. Trailer sway control and a weight distributing (load equalizing) hitch are recommended for heavier Tongue Weights (TW) and may be required depending on vehicle and trailer configuration/loading to comply with GAWR requirements.

WARNING!

- **An improperly adjusted weight distributing hitch system may reduce handling, stability and braking performance and could result in an accident.**
- **Weight distributing systems may not be compatible with surge brake couplers. Consult with your hitch and trailer manufacturer or a reputable Recreational Vehicle dealer for additional information.**

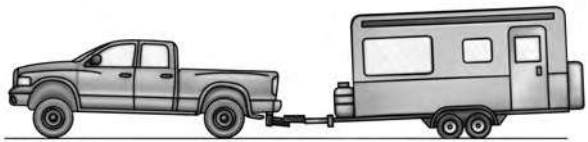

057003770

EXAMPLE — Without Weight-Distributing Hitch (Incorrect)

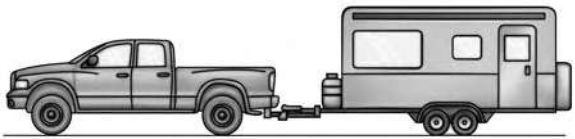

057003769

EXAMPLE — With Weight-Distributing Hitch (Correct)

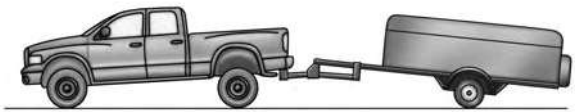

057003768

EXAMPLE — Improper Adjustment of Weight-Distributing Hitch (Incorrect)

Fifth-Wheel Hitch

The fifth-wheel hitch is a special high platform with a coupling that mounts over the rear axle of the tow vehicle in the truck bed. It connects a vehicle and fifth-wheel trailer with a coupling king pin.

Gooseneck Hitch

The gooseneck hitch employs a pivoted coupling arm which attaches to a ball mounted in the bed of a pickup truck. The coupling arm connects to the hitch mounted over the rear axle in the truck bed.

Trailer Hitch Type and Maximum Trailer Weight

The following chart provides the maximum trailer weight a given factory equipped trailer hitch type can tow and should be used to assist you in selecting the correct trailer hitch for your intended towing condition.

Trailer Hitch Type and Maximum Trailer Weight	
Hitch Type	**Max. Trailer Hitch Max. Trailer Weight**
Class III Bumper Hitch - 1500 Model	5,000 lbs (2 268 kg)
Class IV - 1500 Model	10,450 lbs (4 740 kg)
Class V - 2500/3500 Models	17,000 lbs (7 711 kg)
Fifth Wheel - 2500/ 3500 Models	25,000 lbs (11 339 kg)
Gooseneck - 2500 Model	20,000 lbs (9 071 kg)
Gooseneck - 3500 Model	30,000 lbs (13 636 kg)
Refer to the “Trailer Towing Weights (Maximum Trailer Weight Ratings)” for the Maximum Gross Trailer Weight (GTW) towable for your given drive-train.	

All trailer hitches should be professionally installed on your vehicle.

Trailer Towing Weights (Maximum Trailer Weight Ratings)

The rear bumper is intended to tow trailers up to a 5,000 lbs (2 268 kg) without added equipment or alterations to the standard equipment.

Ram 1500 4x2

	ST	SLT/Outdoorsman	Sport/Laramie
3.6L V-6 8–Speed Automatic Transmission	Standard Towing: 5,000 lbs (2 268 kg) Max Towing: 6,500 lbs (2 948 kg) Max Payload: 1,910 lbs (866 kg)	Standard Towing: 5,000 lbs (2 268 kg) Max Towing: 6,500 lbs (2 948 kg) Max Payload: 1,890 lbs (857 kg)	–
5.7L HEMI® V-8 6–Speed Automatic Transmission	Standard Towing: 5,000 lbs (2 268 kg) Max Towing: 10,450 lbs (4 740 kg) Max Payload: 1,730 lbs (785 kg)	Standard Towing: 5,000 lbs (2 268 kg) Max Towing: 10,450 lbs (4 740 kg) Max Payload: 1,700 lbs (771 kg)	Standard Towing: 5,000 lbs (2 268 kg) Max Towing: 10,300 lbs (4 672 kg) Max Payload: 1,570 lbs (712 kg)

Ram 1500 4x4

	ST	SLT/Outdoorsman	Sport/Laramie
3.6L V-6 8–Speed Automatic Transmission	Standard Towing: 5,000 lbs (2 268 kg) Max Towing: 6,300 lbs (2 857 kg) Max Payload: 1,930 lbs (875 kg)	Standard Towing: 5,000 lbs (2 268 kg) Max Towing: 6,250 lbs (2 834 kg) Max Payload: 1,900 lbs (861 kg)	–
5.7L HEMI® V-8 6–Speed Automatic Transmission	Standard Towing: 5,000 lbs (2 268 kg) Max Towing: 10,350 lbs (4 694 kg) Max Payload: 1,490 lbs (676 kg)	Standard Towing: 5,000 lbs (2 268 kg) Max Towing: 10,350 lbs (4 695 kg) Max Payload: 1,470 lbs (667 kg)	Standard Towing: 5,000 lbs (2 268 kg) Max Towing: 10,050 lbs (4 558 kg) Max Payload: 1,400 lbs (635 kg)

Ram 2500 And 3500

	ST	SLT/Outdoorsman/Sport	Laramie
5.7L HEMI® V-8 6–Speed Automatic Transmission	Max Towing: 10,100 lbs (4 581 kg) Max Payload: 1,780 lbs (807 kg)	Max Towing: 12,300 lbs (5 579 kg) Max Payload: 3,120 lbs (1 415 kg)	–
6.4L HEMI® V-8 6–Speed Automatic Transmission	Max Towing: 10,100 lbs (4 581 kg) Max Payload: 1,780 lbs (807 kg)	Max Towing: 12,300 lbs (5 579 kg) Max Payload: 3,120 lbs (1 415 kg)	–

NOTE: For additional trailer towing information (maximum trailer weight ratings) refer to the following website addresses:

- **http://www.ramtrucks.com**
- **http://www.ramtruck.ca (Canada)**

Trailer And Tongue Weight

Always load a trailer with 60% to 65% of the weight in the front of the trailer. This places 10% to 15% of the GTW on the tow hitch of your vehicle. Loads balanced over the wheels or heavier in the rear can cause the trailer to sway **severely** side to side which will cause loss of control of the vehicle and trailer. Failure to load trailers heavier in front is the cause of many trailer collisions. Never exceed

the maximum tongue weight stamped on your trailer hitch.

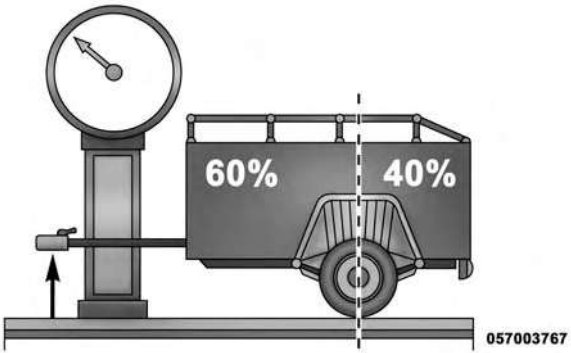

Consider the following items when computing the weight on the rear axle of the vehicle:

- The tongue weight of the trailer
- The weight of any other type of cargo or equipment put in or on your vehicle
- The weight of the driver and all passengers.

NOTE: Remember that everything put into or on the trailer adds to the load on your vehicle. Also, additional factory-installed options or dealer-installed options must be considered as part of the total load on your vehicle. Refer to "Tire Safety Information/Tire and Loading Information Placard" in "Starting and Operating" for further information.

Towing Requirements

To promote proper break-in of your new vehicle drivetrain components the following guidelines are recommended:

CAUTION!

- **Do not tow a trailer at all during the first 500 miles (805 km) the new vehicle is driven. The engine, axle or other parts could be damaged.**
- **Then, during the first 500 miles (805 km) that a trailer is towed, do not drive over 50 mph (80 km/h) and do not make starts at full throttle. This helps the engine and other parts of the vehicle wear in at the heavier loads.**

WARNING!

Improper towing can lead to a collision. Follow these guidelines to make your trailer towing as safe as possible:

- **Make certain that the load is secured in the trailer and will not shift during travel. When trailering cargo that is not fully secured, dynamic load shifts can occur that may be difficult for the driver to control. You could lose control of your vehicle and have a collision.**
- **When hauling cargo or towing a trailer, do not overload your vehicle or trailer. Overloading can cause a loss of control, poor performance or damage to brakes, axle, engine, transmission, steering, suspension, chassis structure or tires.**

(Continued)

WARNING! *(Continued)*

- **Safety chains must always be used between your vehicle and trailer. Always connect the chains to the hook retainers of the vehicle hitch. Cross the chains under the trailer tongue and allow enough slack for turning corners.**
- **Vehicles with trailers should not be parked on a grade. When parking, apply the parking brake on the tow vehicle. Put the tow vehicle transmission in PARK. For four-wheel drive vehicles, make sure the transfer case is not in NEUTRAL. Always, block or "chock" the trailer wheels.**
- **GCWR must not be exceeded.**

(Continued)

WARNING! *(Continued)*

- **Total weight must be distributed between the tow vehicle and the trailer such that the following four ratings are not exceeded:**

  1. GVWR

  2. GTW

  3. GAWR

  4. Trailer tongue weight rating for the trailer hitch utilized.

Towing Requirements – Tires

- Do not attempt to tow a trailer while using a compact spare tire.
- Proper tire inflation pressures are essential to the safe and satisfactory operation of your vehicle. Refer to "Tires – General Information" in "Starting and Operating" for proper tire inflation procedures.
- Check the trailer tires for proper tire inflation pressures before trailer usage.
- Check for signs of tire wear or visible tire damage before towing a trailer. Refer to "Tires – General Information" in "Starting and Operating" for the proper inspection procedure.
- When replacing tires, refer to "Tires – General Information" in "Starting and Operating" for proper tire replacement procedures. Replacing tires with a higher load carrying capacity will not increase the vehicle's GVWR and GAWR limits.

Towing Requirements – Trailer Brakes

- Do **not** interconnect the hydraulic brake system or vacuum system of your vehicle with that of the trailer. This could cause inadequate braking and possible personal injury.
- An electronically actuated trailer brake controller is required when towing a trailer with electronically actuated brakes. When towing a trailer equipped with a hydraulic surge actuated brake system, an electronic brake controller is not required.
- Trailer brakes are recommended for trailers over 1,000 lbs (454 kg) and required for trailers in excess of 1,653 lbs (750 kg).

CAUTION!

If the trailer weighs more than 1,000 lbs (454 kg) loaded, it should have its own brakes and they should be of adequate capacity. Failure to do this could lead to accelerated brake lining wear, higher brake pedal effort, and longer stopping distances.

WARNING!

- **Do not connect trailer brakes to your vehicle's hydraulic brake lines. It can overload your brake system and cause it to fail. You might not have brakes when you need them and could have an accident.**

(Continued)

WARNING! ***(Continued)***

- **Towing any trailer will increase your stopping distance. When towing you should allow for additional space between your vehicle and the vehicle in front of you. Failure to do so could result in an accident.**

Integrated Trailer Brake Module – If Equipped

Your vehicle may have an Integrated Trailer Brake Module (ITBM) for Electric and Electric Over Hydraulic (EOH) trailer brakes.

NOTE: This module has been designed and verified with electric trailer brakes and new electric over hydraulic systems. Some previous EOH systems may not be compatible with ITBM.

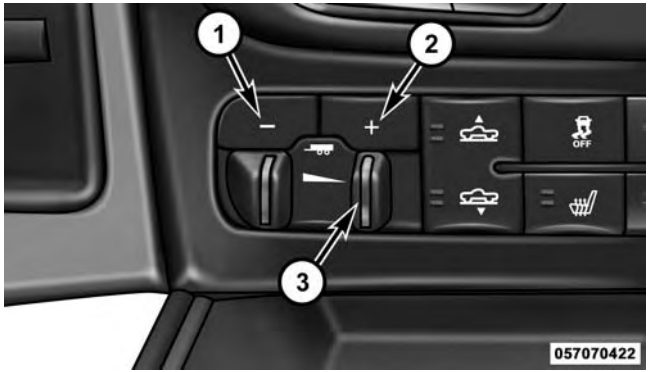

1 — GAIN Adjustment Button
2 — GAIN Adjustment Button
3 — Manual Brake Control Lever

The user interface consists of the following:

Manual Brake Control Lever

Slide the manual brake control lever to the right to activate power to the trailer's electric brakes independent of the tow vehicle's brakes. If the manual brake control lever is activated while the brake is also applied, the greater of the two inputs determines the power sent to the trailer brakes.

The trailer and the vehicle's brake lamps will come on when either vehicle braking or manual trailer brakes are applied.

Trailer Brake Status Indicator Light

This light indicates the trailer electrical connection status.

If no electrical connection is detected after the ignition is turned on, pressing the GAIN adjustment button or sliding the manual brake control lever will display the GAIN setting for 10 seconds and the "Trailer Brake Status Indicator Light" will not be displayed.

If a fault is detected in the trailer wiring or the Integrated Trailer Brake Module (ITBM), the "Trailer Brake Status Indicator Light" will flash.

GAIN Adjustment Buttons (+/-)

Pressing these buttons will adjust the brake control power output to the trailer brakes in 0.5 increments. The GAIN setting can be increased to a maximum of 10 or decreased to a minimum of 0 (no trailer braking).

GAIN

The GAIN setting is used to set the trailer brake control for the specific towing condition and should be changed as towing conditions change. Changes to towing conditions include trailer load, vehicle load, road conditions and weather.

Adjusting GAIN

NOTE: This should only be performed in a traffic free environment at speeds of approximately 20–25 mph (30–40 km/h).

1. Make sure the trailer brakes are in good working condition, functioning normally, and properly adjusted. See your trailer dealer if necessary.
2. Hook up the trailer and make the electrical connections according to the trailer manufacturer's instructions.

3. When a trailer with electric/EOH brakes is plugged in, the trailer connected message should appear in the EVIC (if the connection is not recognized by the ITBM, braking functions will not be available), the GAIN setting will illuminate and the correct type of trailer must be selected from the EVIC options.
4. Press the UP or DOWN button on the steering wheel until “TRAILER TOW” appears on the screen.
5. Press the RIGHT arrow on the steering wheel to enter “TRAILER TOW”.
6. Press the UP or DOWN buttons until Trailer Brake Type appears on the screen.

NOTE: 1500 Models Only – Light Electric and Heavy Electric will only be available due to the tow capacities of the vehicle.

7. Press the RIGHT arrow and then press the UP or DOWN buttons until the proper Trailer Brake Type appears on the screen.
8. In a traffic-free environment, tow the trailer on a dry, level surface at a speed of 20–25 mph (30–40 km/h) and squeeze the manual brake control lever completely.
9. If the trailer wheels lockup (indicated by squealing tires), reduce the GAIN setting; if the trailer wheels turn freely, increase the GAIN setting.

Repeat Steps 8 and 9 until the GAIN setting is at a point just below trailer wheel lockup. If towing a heavier trailer, trailer wheel lockup may not be attainable even with the maximum GAIN setting of 10.

	Light Electric	Heavy Electric	Light EOH	Heavy EOH
Type of Trailer Brakes	Electric Trailer Brakes	Electric Trailer Brakes	Electric over Hydraulic Trailer Brakes	Electric over Hydraulic Trailer Brakes
Load	*Under 10,000 lbs	*Above 10,000 lbs	*Under 10,000 lbs	*Above 10,000lbs

* The suggested selection depends and may change depending on the customer preferences for braking performance. Condition of the trailer brakes, driving and road state may also affect the selection.

EVIC Display Messages

The trailer brake control interacts with the Electronic Vehicle Information Center (EVIC). Display messages, along with a single chime, will be displayed when a malfunction is determined in the trailer connection, trailer brake control, or on the trailer. Refer to "Electronic Vehicle Information Center" in "Understanding Your Instrument Panel" for further information.

CAUTION!

Connecting a trailer that is not compatible with the ITBM system may result in reduced or complete loss of trailer braking. There may be a increase in stopping distance or trailer instability which could result in damage to your vehicle, trailer, or other property.

WARNING!

Connecting a trailer that is not compatible with the ITBM system may result in reduced or complete loss of trailer braking. There may be a increase in stopping distance or trailer instability which could result in personal injury.

NOTE:

- An aftermarket controller may be available for use with trailers with air or electric-over-hydraulic trailer brake systems. To determine the type of brakes on your trailer and the availability of controllers, check with your trailer manufacturer or dealer.
- Removal of the ITBM will cause errors and it may cause damage to the electrical system and electronic modules of the vehicle. See your authorized dealer if an aftermarket module is to be installed.

Towing Requirements – Trailer Lights And Wiring

Whenever you pull a trailer, regardless of the trailer size, stoplights and turn signals on the trailer are required for motoring safety.

The Trailer Tow Package may include a four- and seven-pin wiring harness. Use a factory approved trailer harness and connector.

NOTE: Do not cut or splice wiring into the vehicles wiring harness.

The electrical connections are all complete to the vehicle but you must mate the harness to a trailer connector. Refer to the following illustrations.

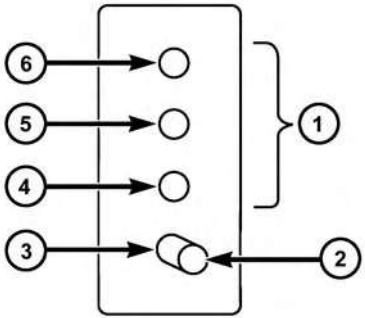

057003766

Four-Pin Connector

1 — Female Pins
2 — Male Pin
3 — Ground
4 — Park
5 — Left Stop/Turn
6 — Right Stop/Turn

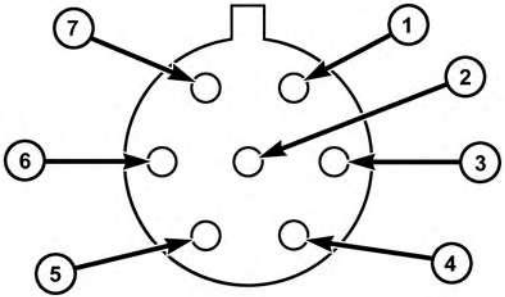

057003765

Seven-Pin Connector

1 — Battery
2 — Backup Lamps
3 — Right Stop/Turn
4 — Electric Brakes
5 — Ground
6 — Left Stop/Turn
7 — Running Lamps

Towing Tips

Before setting out on a trip, practice turning, stopping and backing the trailer up in an area away from heavy traffic.

Automatic Transmission

The "DRIVE" range can be selected when towing. The transmission controls include a drive strategy to avoid frequent shifting when towing. However, if frequent shifting does occur while in DRIVE, select "TOW/HAUL" mode or select a lower gear range (using the Electronic Range Select (ERS) switches).

NOTE: Using "TOW/HAUL" mode or selecting a lower gear range (using the ERS switches) while operating the vehicle under heavy loading conditions will improve performance and extend transmission life by reducing excessive shifting and heat build up. This action will also provide better engine braking.

When towing a loaded trailer up steep grades at low speeds (20 mph [32 km/h] or below), holding your vehicle in first gear (using the ERS switches) can help to avoid transmission overheating.

If you regularly tow a trailer for more than 45 minutes of continuous operation, then change the automatic transmission fluid and filter(s) as specified for ″police, taxi, fleet, or frequent trailer towing.″. Refer to "Maintenance Schedule" for the proper maintenance intervals.

NOTE: Check the automatic transmission fluid level before towing (6-speed automatic only).

Tow/Haul Mode

To reduce potential for automatic transmission overheating, turn the "TOW/HAUL" feature ON when driving in hilly areas, or select a lower gear range (using the Electronic Range Select (ERS) switches) on more severe grades.

Electronic Speed Control – If Equipped

- Do not use in hilly terrain or with heavy loads.
- When using the speed control, if you experience speed drops greater than 10 mph (16 km/h), disengage until you can get back to cruising speed.
- Use speed control in flat terrain and with light loads to maximize fuel efficiency.

Cooling System

To reduce potential for engine and transmission overheating, take the following actions:

City Driving

When stopped for short periods of time, shift the transmission into NEUTRAL and increase engine idle speed.

Highway Driving

Reduce speed.

Air Conditioning

Turn off temporarily.

Air Suspension System

To aid in attaching/detaching the trailer from the vehicle, the air suspension system can be used. Refer to "Air Suspension System" in "Starting and Operating" for further information.

NOTE: The vehicle must remain in the engine running position while attaching a trailer for proper leveling of the air suspension system.

SNOWPLOW

1500 Models Only

NOTE: Do not use this model vehicle for snowplow applications.

WARNING!

Snowplows and other aftermarket equipment should not be added to the front end of your vehicle. The airbag crash sensors may be affected by the change in the front end structure. The airbags could deploy unexpectedly or could fail to deploy during a collision resulting in serious injury or death.

CAUTION!

Using this vehicle for snowplow applications can cause damage to the vehicle.

WARNING!

Attaching a snowplow to this vehicle could adversely affect performance of the airbag system in a collision.

(Continued)

WARNING! ***(Continued)***

Do not expect that the airbag will perform as described earlier in this manual.

2500/3500 Models Only

Snowplow Prep Packages are available as a factory installed option. These packages include components necessary to equip your vehicle with a snowplow.

NOTE: Before installation of a snowplow it is highly recommended that the owner/installer obtain and follow the recommendations contained within the current Body Builders Guide. See your authorized dealer, installer or snowplow manufacturer for this information. There are unique electrical systems that must be connected to properly assure operator safety and prevent overloading vehicle systems.

WARNING!

Attaching a snowplow to this vehicle could adversely affect performance of the airbag system in a collision. Do not expect that the airbag will perform as described earlier in this manual.

CAUTION!

The "Lamp Out" indicator could illuminate if exterior lamps are not properly installed.

Before Plowing

- Check the hydraulic system for leaks and proper fluid level.
- Check the mounting bolts and nuts for proper tightness.
- Check the runners and cutting edge for excessive wear. The cutting edge should be 1/4 to 1/2 in (6 cm to 1.2 cm) above ground in snow plowing position.
- Check that snowplow lighting is connected and functioning properly.

Snowplow Prep Package Model Availability

For Information about snowplow applications visit www.ramtrucks.com or refer to the current Body Builders Guide.

1. The maximum number of occupants in the truck should not exceed two.
2. The total GVWR or the Front GAWR or the Rear GAWR should never be exceeded.
3. Cargo capacity will be reduced by the addition of options or passengers, etc.

The loaded vehicle weight, including the snowplow system, all aftermarket accessories, driver, passengers, options, and cargo, must not exceed either the Gross Vehicle Weight (GVWR) or Gross Axle Weight (GAWR) ratings. These weights are specified on the Safety Compliance Certification Label on the driver's side door opening.

NOTE: Detach the snowplow when transporting passengers.

Vehicle front end wheel alignment was set to specifications at the factory without consideration for the weight of the plow. Front end toe-in should be checked and reset if necessary at the beginning and end of the snowplow season. This will help prevent uneven tire wear.

The blade should be lowered whenever the vehicle is parked.

Maintain and operate your vehicle and snowplow equipment following the recommendations provided by the specific snowplow manufacturer.

Over The Road Operation With Snowplow Attached

The blade restricts air flow to the radiator and causes the engine to operate at higher than normal temperatures. Therefore, when transporting the plow, angle the blade completely and position it as low as road or surface conditions permit. Do not exceed 40 mph (64 km/h). The operator should always maintain a safe stopping distance and allow adequate passing clearance.

Operating Tips

Under ideal snow plowing conditions, 20 mph (32 km/h) should be maximum operating speed. The operator should be familiar with the area and surface to be cleaned. Reduce speed and use extreme caution when plowing unfamiliar areas or under poor visibility.

General Maintenance

Snowplows should be maintained in accordance with the plow manufacturer's instructions.

Keep all snowplow electrical connections and battery terminals clean and free of corrosion.

When plowing snow, to avoid transmission and drive-train damage, the following precautions should be observed.

- Operate with transfer case in 4L when plowing small or congested areas where speeds are not likely to exceed 15 mph (24 km/h). At higher speeds operate in 4H.
- Vehicles with automatic transmissions should use 4L range when plowing deep or heavy snow for extended periods of time to avoid transmission overheating.
- Do not shift the transmission unless the engine has returned to idle and wheels have stopped. Make a practice of stepping on the brake pedal while shifting the transmission.

RECREATIONAL TOWING (BEHIND MOTORHOME, ETC.)

Towing This Vehicle Behind Another Vehicle

Towing Condition	Wheels OFF The Ground	Two-Wheel Drive Models	Four-Wheel Drive Models
Flat Tow	NONE	**NOT ALLOWED**	**See Instructions** • Automatic transmission in PARK • Manual transmission in gear (NOT in NEUTRAL) • Transfer case in NEUTRAL (N) • Tow in forward direction
Dolly Tow	Front	**NOT ALLOWED**	**NOT ALLOWED**
	Rear	OK	**NOT ALLOWED**
On Trailer	ALL	OK	OK

NOTE: Vehicles equipped with air suspension must be lowered to the "Entry/Exit" (lowest) level, and have automatic leveling disabled, before tying them down (from the body) on a trailer or flatbed truck. Refer to "Air Suspension – If Equipped" for more information. If the vehicle cannot be lowered to the "Entry/Exit" level (for example, engine will not run), tie-downs must be fastened to the axles (not to the body). Failure to follow these instructions may cause fault codes to be set and/or cause loss of proper tie-down tension.

Recreational Towing – Two-Wheel Drive Models

DO NOT flat tow this vehicle. Damage to the drivetrain will result.

Recreational towing (for two-wheel drive models) is allowed **ONLY** if the rear wheels are **OFF** the ground. This may be accomplished using a tow dolly or vehicle trailer. If using a tow dolly, follow this procedure:

1. Properly secure the dolly to the tow vehicle, following the dolly manufacturer's instructions.
2. Drive the rear wheels onto the tow dolly.
3. Firmly apply the parking brake. Place automatic transmission in PARK, manual transmission in gear (not in NEUTRAL).
4. Properly secure the rear wheels to the dolly, following the dolly manufacturer's instructions.
5. Turn the ignition switch to the OFF position and remove the key fob.
6. Install a suitable clamping device, designed for towing, to secure the front wheels in the straight position.

CAUTION!

- **Towing with the rear wheels on the ground will cause severe transmission damage. Damage from improper towing is not covered under the New Vehicle Limited Warranty.**
- **Do not disconnect the driveshaft because fluid may leak from the transmission, causing damage to internal parts.**

Recreational Towing – Four-Wheel Drive Models

NOTE: Both the manual shift and electronic shift transfer cases must be shifted into NEUTRAL (N) for recreational towing. Automatic transmissions must be shifted into PARK for recreational towing. Manual transmissions must be placed in gear (NOT in NEUTRAL) for recreational towing. Refer to the following for the proper transfer case NEUTRAL (N) shifting procedure for your vehicle.

CAUTION!

- **Front or rear wheel lifts must not be used. Internal damage to the transmission or transfer case will occur if a front or rear wheel lift is used when recreational towing.**

(Continued)

CAUTION! *(Continued)*

- **Tow only in the forward direction. Towing this vehicle backwards can cause severe damage to the transfer case.**
- **Automatic transmissions must be placed in PARK for recreational towing.**
- **Manual transmissions must be placed in gear (not in Neutral) for recreational towing.**
- **Before recreational towing, perform the procedure outlined under "Shifting Into NEUTRAL (N)" to be certain that the transfer case is fully in NEUTRAL (N). Otherwise, internal damage will result.**
- **Towing this vehicle in violation of the above requirements can cause severe transmission and/or transfer case damage. Damage from improper towing is not covered under the New Vehicle Limited Warranty.**

(Continued)

CAUTION! *(Continued)*

- **Do not disconnect the rear driveshaft because fluid will leak from the transfer case, causing damage to internal parts.**
- **Do not use a bumper-mounted clamp-on tow bar on your vehicle. The bumper face bar will be damaged.**

Shifting Into NEUTRAL (N)

Use the following procedure to prepare your vehicle for recreational towing.

WARNING!

You or others could be injured or killed if you leave the vehicle unattended with the transfer case in the NEUTRAL (N) position without first fully engaging

(Continued)

WARNING! ***(Continued)***

the parking brake. The transfer case NEUTRAL (N) position disengages both the front and rear driveshafts from the powertrain and will allow the vehicle to move, even if the transmission is in PARK. The parking brake should always be applied when the driver is not in the vehicle.

CAUTION!

It is necessary to follow these steps to be certain that the transfer case is fully in NEUTRAL (N) before recreational towing to prevent damage to internal parts.

1. Bring the vehicle to a complete stop, with the engine running. Firmly apply the parking brake.
2. Shift the transmission to NEUTRAL.
3. Press and hold the brake pedal.
4. Depress the clutch pedal on a manual transmission.
5.
   - With manual shift transfer case, shift the transfer case lever into NEUTRAL (N).
   - With electronic shift transfer case, press and hold the transfer case NEUTRAL (N) button. Some models have a small, recessed "N" button (at the center of the transfer case switches) that must be pressed using a ballpoint pen or similar object. Other models have a rectangular NEUTRAL switch, below the rotary transfer case control knob. The NEUTRAL (N) indicator light will blink while the shift is in progress. The light will stop blinking (stay on solid) when the shift to NEUTRAL (N) is complete. After the shift is completed and the NEUTRAL (N) light stays on, release the NEUTRAL (N) button.
6. Release the parking brake.

7. Shift the transmission into REVERSE.
8. Release the brake pedal (and clutch pedal on manual transmissions) for five seconds and ensure that there is no vehicle movement.
9. Repeat steps 7 and 8 with automatic transmission in DRIVE or manual transmission in first gear.
10. Shift the transmission to NEUTRAL. Firmly apply the parking brake. Turn OFF the engine. For vehicles with Keyless Enter-N-Go, press and hold the ENGINE START/STOP button until the engine shuts off.
11. Shift the transmission into PARK or place manual transmission in gear (NOT in Neutral). On 8-speed transmissions the shifter will automatically select PARK when the engine is turned off.
12. Turn the ignition switch to the OFF position, then cycle the key or the Keyless Enter-N-Go button to the RUN position and back to the OFF position. Remove the key fob from the ignition switch.
13. Attach the vehicle to the tow vehicle using a suitable tow bar.
14. Release the parking brake.

NOTE: With electronic shift transfer case:

- Steps 2 through 4 are requirements that must be met prior to pressing the NEUTRAL (N) button, and must continue to be met until the shift has been completed. If any of these requirements are not met prior to pressing the NEUTRAL (N) button or are no longer met during the shift, the NEUTRAL (N) indicator light will flash continuously until all requirements are met or until the NEUTRAL (N) button is released.

- The ignition switch must be in the ON/RUN position for a shift to take place and for the position indicator lights to be operable. If the ignition switch is not in the ON/RUN position, the shift will not take place and no position indicator lights will be on or flashing.
- A flashing NEUTRAL (N) position indicator light indicates that shift requirements have not been met.

Shifting Out Of NEUTRAL (N)

Use the following procedure to prepare your vehicle for normal usage.

1. Bring the vehicle to a complete stop, leaving it connected to the tow vehicle.
2. Firmly apply the parking brake.
3. Press and hold the brake pedal.
4. Start the engine. Shift the transmission into NEUTRAL. Depress the clutch pedal on a manual transmission.
   - With manual shift transfer case, shift the transfer case lever to the desired position.
   - With electronic shift transfer case with rotary selector switch, press and hold the transfer case NEUTRAL (N) button until the NEUTRAL (N) indicator light turns off. After the NEUTRAL (N) indicator light turns off, release the NEUTRAL (N) button. After the NEUTRAL (N) button has been released, the transfer case will shift to the position indicated by the selector switch.
   - With electronic shift transfer case with pushbutton selector switch, press and hold the switch for the desired transfer case position, until the NEUTRAL (N) indicator light turns off and the desired position indicator light turns on.

NOTE: When shifting out of transfer case NEUTRAL (N), turning the engine OFF is not required, but may be helpful to avoid gear clash. With the 8-speed automatic transmission, the engine must remain running, since turning the engine OFF will shift the transmission to PARK (and the transmission must be in NEUTRAL for the transfer case to shift out of NEUTRAL).

5. Turn the engine OFF. Shift automatic transmission into PARK. On 8-speed transmissions the shifter will automatically select PARK when the engine is turned off.
6. Release the brake pedal (and clutch pedal on a manual transmission).
7. Disconnect vehicle from the tow vehicle.
8. Start the engine.
9. Press and hold the brake pedal.
10. Release the parking brake.
11. Shift the transmission into gear, release the brake pedal (and clutch pedal on manual transmissions), and check that the vehicle operates normally.

NOTE: With electronic shift transfer case:

- Steps 3 and 4 are requirements that must be met prior to pressing the button to shift out of NEUTRAL (N), and must continue to be met until the shift has been completed. If any of these requirements are not met before pressing the button or are no longer met during the shift, the NEUTRAL (N) indicator light will flash continuously until all requirements are met or until the button is released.
- The ignition switch must be in the ON/RUN position for a shift to take place and for the position indicator lights to be operable. If the ignition switch is not in the ON/RUN position, the shift will not take place and no position indicator lights will be on or flashing.
- A flashing NEUTRAL (N) position indicator light indicates that shift requirements have not been met.

WHAT TO DO IN EMERGENCIES

CONTENTS

- HAZARD WARNING FLASHERS 607
- IF YOUR ENGINE OVERHEATS 607
- JACKING AND TIRE CHANGING 1500 SERIES TRUCKS 608
  - Jack Location. 609
  - Removal Of Jack And Tools (1500 Series) 609
  - Removing The Spare Tire 611
  - Preparations 615
  - Jack Instructions (1500 Series) 616
  - To Stow The Flat Or Spare 622
  - Reinstalling The Jack And Tools (1500 Series) 624
  - Hub Caps/Wheel Covers — If Equipped 626
  - Wheel Nuts 627
- JACKING AND TIRE CHANGING 2500 AND 3500 SERIES TRUCKS 628
  - Jack Location. 628
  - Removal Of Jack And Tools (2500, 3500 Series) 628
  - Removing The Spare Tire 630
  - Preparations 634

- Jack Instructions (2500, 3500 Series) 635
- To Stow The Flat Or Spare 641
- Reinstalling The Jack And Tools (2500 And 3500 Series) 643
- Hub Caps/Wheel Covers — If Equipped 645
- Wheel Nuts 646

■ HOISTING 649

■ JUMP-STARTING PROCEDURES 650
- Preparations For Jump-Start 650
- Jump-Starting Procedure 652

■ FREEING A STUCK VEHICLE 654

■ EMERGENCY TOW HOOKS — IF EQUIPPED 655

■ SHIFT LEVER OVERRIDE 656
- Column Shifter — If Equipped 656
- Center Console Shifter — If Equipped 657

■ MANUAL PARK RELEASE — 8 SPEED TRANSMISSION 658

■ TOWING A DISABLED VEHICLE 660
- Two-Wheel Drive Models 662
- Four-Wheel Drive Models. 663

HAZARD WARNING FLASHERS

The Hazard Warning flasher switch is located on the upper switch bank just below the radio.

Press the switch to turn on the Hazard Warning flasher. When the switch is activated, all directional turn signals will flash on and off to warn oncoming traffic of an emergency. Press the switch a second time to turn off the Hazard Warning flashers.

This is an emergency warning system and it should not be used when the vehicle is in motion. Use it when your vehicle is disabled and it is creating a safety hazard for other motorists.

When you must leave the vehicle to seek assistance, the Hazard Warning flashers will continue to operate even though the ignition is placed in the OFF position.

NOTE: With extended use the Hazard Warning flashers may wear down your battery.

IF YOUR ENGINE OVERHEATS

In any of the following situations, you can reduce the potential for overheating by taking the appropriate action.

- On the highways — slow down.
- In city traffic — while stopped, place the transmission in NEUTRAL, but do not increase the engine idle speed.

NOTE: There are steps that you can take to slow down an impending overheat condition:

- If your air conditioner (A/C) is on, turn it off. The A/C system adds heat to the engine cooling system and turning the A/C off can help remove this heat.
- You can also turn the temperature control to maximum heat, the mode control to floor and the blower control to high. This allows the heater core to act as a supplement to the radiator and aids in removing heat from the engine cooling system.

CAUTION!

Driving with a hot cooling system could damage your vehicle. If the temperature gauge reads HOT (H), pull over and stop the vehicle. Idle the vehicle with the air conditioner turned off until the pointer drops back into the normal range. If the pointer remains on HOT (H), and you hear continuous chimes, turn the engine off immediately and call for service.

WARNING!

You or others can be badly burned by hot engine coolant (antifreeze) or steam from your radiator. If you see or hear steam coming from under the hood, do not open the hood until the radiator has had time to cool. Never try to open a cooling system pressure cap when the radiator or coolant bottle is hot.

JACKING AND TIRE CHANGING 1500 SERIES TRUCKS

WARNING!

- **Do not attempt to change a tire on the side of the vehicle close to moving traffic. Pull far enough off the road to avoid the danger of being hit when operating the jack or changing the wheel.**
- **Being under a jacked-up vehicle is dangerous. The vehicle could slip off the jack and fall on you. You could be crushed. Never put any part of your body under a vehicle that is on a jack. If you need to get under a raised vehicle, take it to a service center where it can be raised on a lift.**
- **Never start or run the engine while the vehicle is on a jack.**

(Continued)

WARNING! ***(Continued)***

- **The jack is designed to be used as a tool for changing tires only. The jack should not be used to lift the vehicle for service purposes. The vehicle should be jacked on a firm level surface only. Avoid ice or slippery areas.**

NOTE: To assist with changing a spare tire, the air suspension system has a feature which allows the automatic leveling to be disabled. Refer to "Electronic Vehicle Information Center (EVIC)" in "Understanding Your Instrument Panel" for further information.

Jack Location

The jack and jack tools are stored under the front passenger seat.

Removal Of Jack And Tools (1500 Series)

To access the jack and jack tools you must remove the plastic access cover, located on the side of the front passengers seat. To remove the cover, pull the front part of the cover (closest to the front of the seat) toward you to release a locking tab. Once the front of the cover is loose, slide the cover toward the front of the seat until it is free from the seat frame.

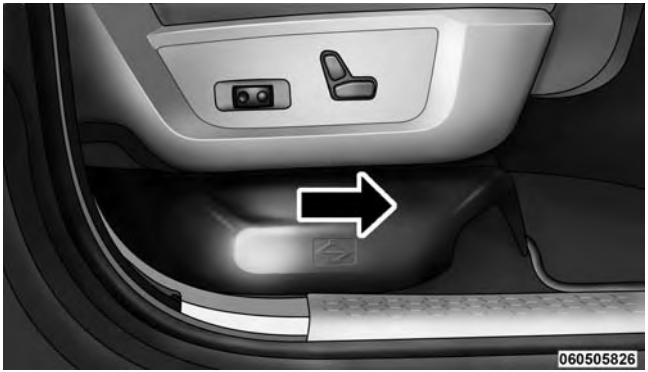

Jack Access Cover

Remove the jack and tools by turning the wing bolt counterclockwise, remove the wing bolt and then slide the assembly out from under the seat.

Jack And Tools (1500 Series)

Release the tool bag straps from the jack and remove tools from bag.

Jack And Tool Bag

WARNING!

After using the jack and tools, always reinstall them in the original carrier and location. While driving

(Continued)

WARNING! *(Continued)*

you may experience abrupt stopping, rapid acceleration or sharp turns. A loose jack, tools, bracket or other objects in the vehicle may move around with force, resulting in serious injury.

Removing The Spare Tire

1. Remove the spare tire before attempting to jack up the truck. Attach the wheel wrench to the jack extension tube with the curved angle facing away from the vehicle. Insert the tube through the access hole between the lower tailgate and the top of the bumper and into the winch mechanism tube.

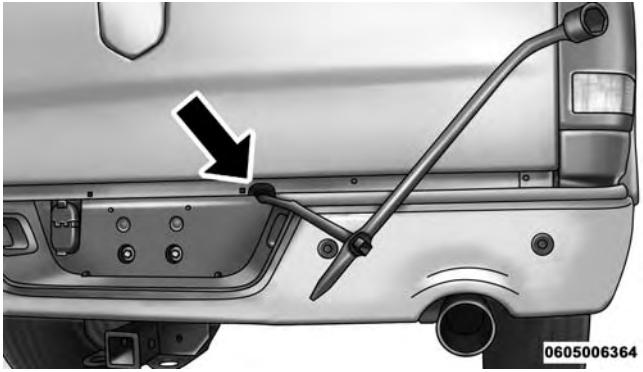

2. Rotate the wheel wrench handle counterclockwise until the spare tire is on the ground with enough cable slack to allow you to pull it out from under the vehicle.

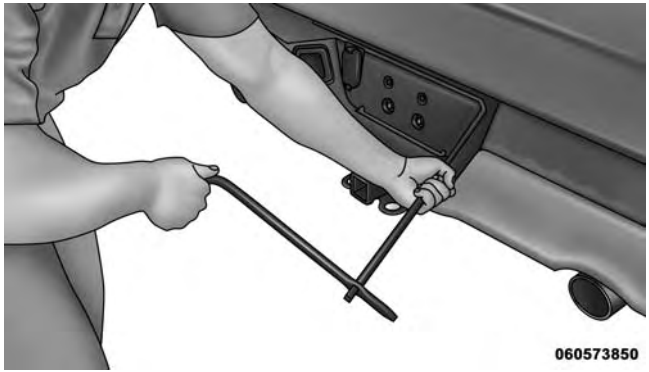

3. Pull the spare tire out from under the vehicle to gain access to the spare tire retainer.

4. Lift the spare tire with one hand to give clearance to tilt the retainer at the end of the cable.

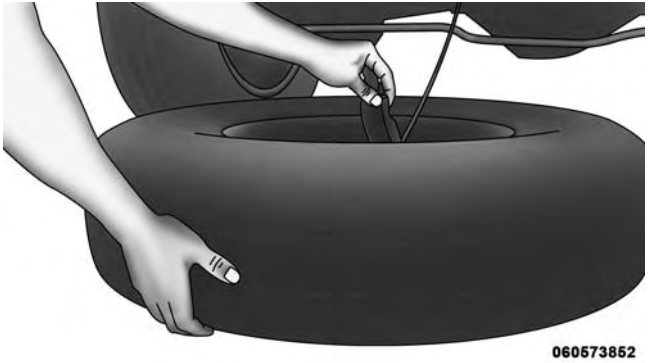

5. Pull the retainer through the center of the wheel.

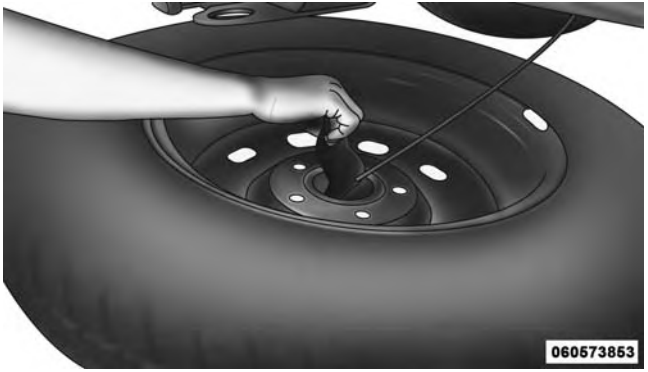

NOTE: The winch mechanism is designed for use with the jack extension tube only. Use of an air wrench or other power tools is not recommended and can damage the winch.

Preparations

1. Park the vehicle on a firm, level surface. Avoid ice or slippery areas.

WARNING!

Do not attempt to change a tire on the side of the vehicle close to moving traffic, pull far enough off the road to avoid the danger of being hit when operating the jack or changing the wheel.

2. Turn on the Hazard Warning flasher.
3. Set the parking brake.
4. Place the shift lever into PARK. On four-wheel drive vehicles, shift the transfer case to the 4L position.
5. Turn the ignition OFF.

Block both the front and rear of the wheel diagonally opposite the jacking position. For example, if the right front wheel is being changed, block the left rear wheel.

NOTE: Passengers should not remain in the vehicle when the vehicle is being jacked.

Jack Instructions (1500 Series)

WARNING!

Carefully follow these tire changing warnings to help prevent personal injury or damage to your vehicle:

- **Always park on a firm, level surface as far from the edge of the roadway as possible before raising the vehicle.**
- **Turn on the Hazard Warning flasher.**
- **Block the wheel diagonally opposite the wheel to be raised.**
- **Set the parking brake firmly and set an automatic transmission in PARK; a manual transmission in REVERSE.**
- **Never start or run the engine with the vehicle on a jack.**

(Continued)

WARNING! ***(Continued)***

- **Do not let anyone sit in the vehicle when it is on a jack.**
- **Do not get under the vehicle when it is on a jack. If you need to get under a raised vehicle, take it to a service center where it can be raised on a lift.**
- **Only use the jack in the positions indicated and for lifting this vehicle during a tire change.**
- **If working on or near a roadway, be extremely careful of motor traffic.**
- **To assure that spare tires, flat or inflated, are securely stowed, spares must be stowed with the valve stem facing the ground.**

Jack Warning Label

CAUTION!

Do not attempt to raise the vehicle by jacking on locations other than those indicated in the Jacking Instructions for this vehicle.

1. Remove the spare wheel, jack, and tools from storage.
2. Using the wheel wrench, loosen, but do not remove, the wheel nuts by turning them counterclockwise one turn while the wheel is still on the ground.
3. Placement of the jack:

4x2 Series Trucks Front Jacking Location

There is a jack location indicator on the rear portion of the lower control arm.

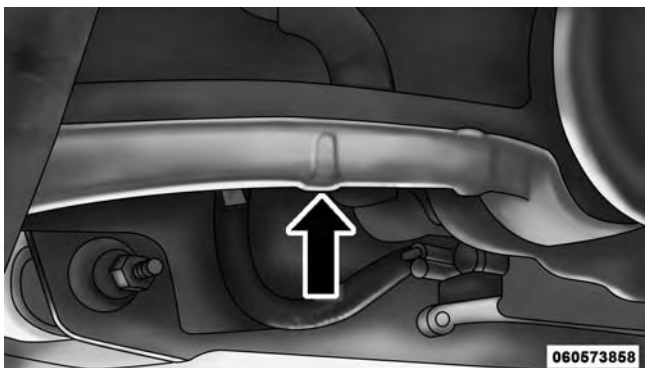

4X2 Front Jacking Location Indicator

When changing a front wheel, place the scissor jack under the rear portion of the lower control arm as shown below.

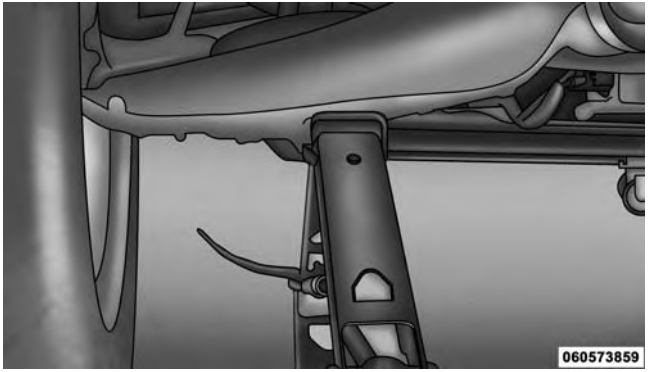

4X2 Front Jacking Location

4x4 Series Trucks Front Jacking Location

There is a jack location indicator on the rear portion of the lower control arm.

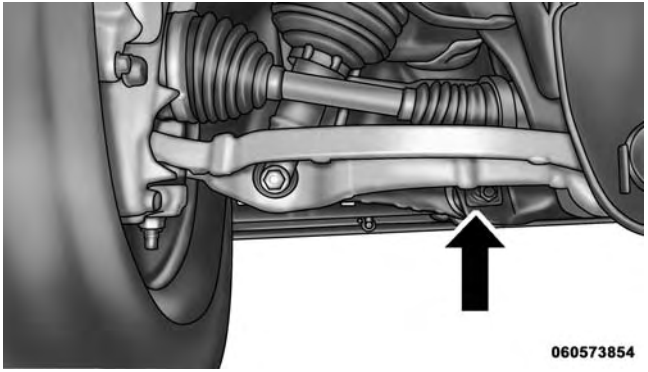

4X4 Front Jacking Location Indicator

When changing a front wheel, place the scissor jack under the rear portion of the lower control arm as shown below.

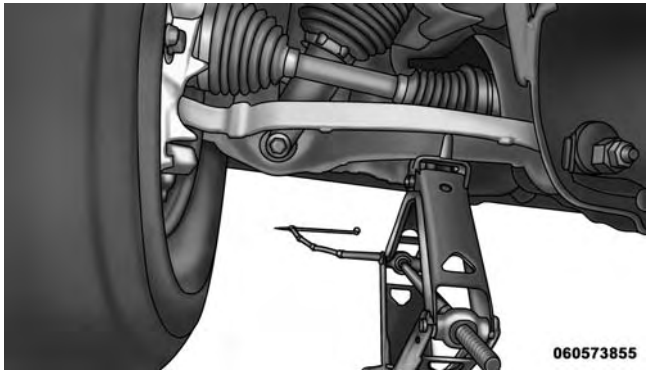

4X4 Front Jacking Location

4x2 and 4x4 Rear Jacking Location

Operate the jack using the jack drive tube and the wheel wrench. The tube extension may be used but is not required.

For 4x2 and 4x4 trucks, when changing a rear wheel, assemble the jack drive tube to the jack and connect the drive tube to the extension tube. Place the jack under the axle between the wheel and the shock bracket with the drive tubes extending to the rear.

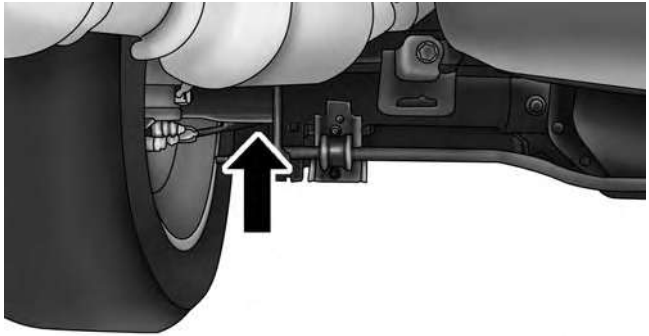

Rear Jacking Location

Connect the jack tube extension and wheel wrench.

CAUTION!

Before raising the wheel off the ground, make sure that the jack will not damage surrounding truck parts and adjust the jack position as required.

4. By rotating the lug wrench clockwise, raise the vehicle until the wheel just clears the surface.

WARNING!

Raising the vehicle higher than necessary can make the vehicle unstable and cause a collision. It could slip off the jack and hurt someone near it. Raise the vehicle only enough to remove the tire.

5. Remove the wheel nuts and pull the wheel off. Install the spare wheel and wheel nuts with the cone shaped end of the wheel nuts toward the wheel. To avoid the risk of forcing the vehicle off the jack, do not fully tighten the wheel nuts until the vehicle has been lowered.

6. Using the lug wrench, finish tightening the wheel nuts using a crisscross pattern. The correct wheel nut tightness for a cone type wheel nut is 120–140 ft lbs (160–190 N·m) torque, for a flanged type wheel nut is 130–160 ft lbs (175–215 N·m) torque. If in doubt about the correct tightness, have them checked with a torque wrench by your authorized dealer or at a service station.

WARNING!

A loose tire or jack thrown forward in a collision or hard stop could injure someone in the vehicle. Always stow the jack parts and the extra tire and wheel in the places provided.

7. Install the wheel center cap and remove the wheel blocks. Do not install chrome or aluminum wheel center caps on the spare wheel. This may result in cap damage.

8. Lower the jack to its fully closed position. If the bottle jack will not lower by turning the dial (thumbwheel) by hand, it may be necessary to use the jack drive tube in order to lower the jack. Stow the replaced tire, jack, and tools as previously described.

9. Adjust the tire pressure when possible.

NOTE: Do not oil wheel studs. For chrome wheels, do not substitute with chrome plated wheel nuts.

To Stow The Flat Or Spare

NOTE: Vehicles equipped with aluminum wheels cannot be stored under the vehicle because the wheel retainer will not fit through the wheel pilot hole. Secure the flat tire in the bed of the truck. **Have the flat tire repaired or replaced immediately.**

WARNING!

A loose tire thrown forward in a collision or hard stop could injure the occupants in the vehicle. Have the deflated (flat) tire repaired or replaced immediately.

1. Turn the wheel so that the valve stem is facing the ground and toward the rear of the vehicle for convenience in checking the spare tire inflation. Slide the wheel retainer through the center of the wheel.

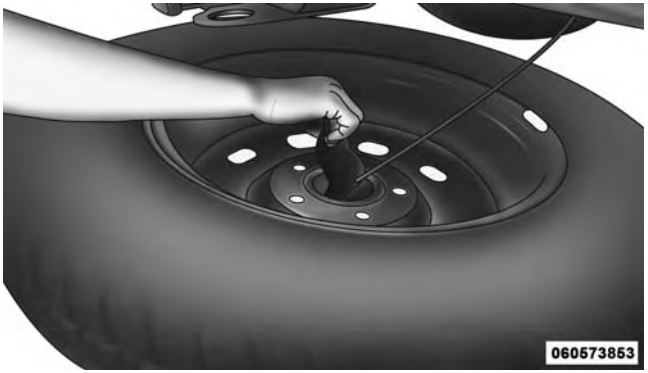

2. Lift the spare tire with one hand to give clearance to tilt the retainer at the end of the cable and position it properly across the wheel opening.

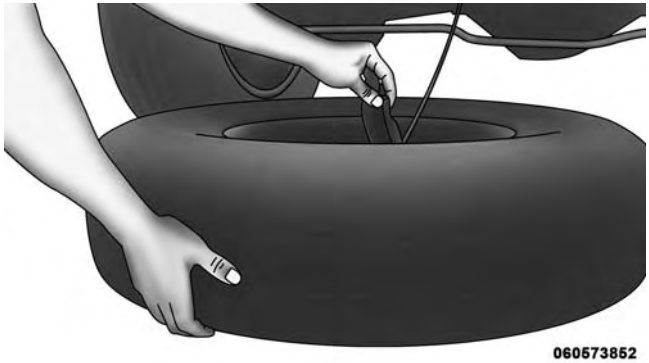

3. Attach the wheel wrench to the jack extension tube with the curved angle facing away from the vehicle. Insert the tube through the access hole between the lower tailgate and the top of the bumper and into the winch mechanism tube.

4. Rotate the lug wrench handle clockwise until the wheel is drawn into place against the underside of the vehicle. Continue to rotate until you feel the winch mechanism slip, or click three or four times. It cannot be overtightened. Push against the tire several times to ensure it is firmly in place.

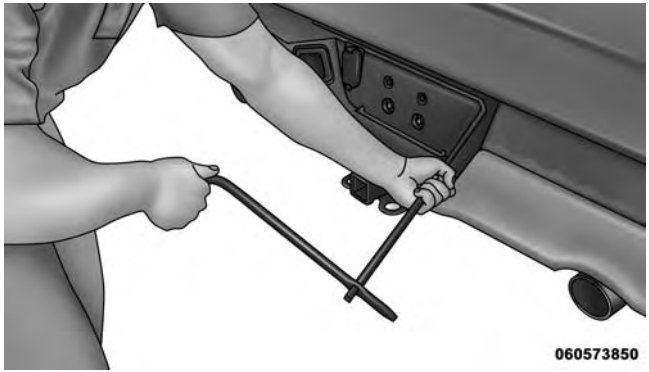

NOTE: The winch mechanism is designed for use with the jack extension tube only. Use of an air wrench or other power tools is not recommended and can damage the winch.

Reinstalling The Jack And Tools (1500 Series)

1. Tighten the jack all the way down by turning the jack turn-screw counterclockwise until the jack is snug.
2. Position the jack and tool bag. Make sure the lug wrench is under the jack near the jack turn-screw.

Jack And Tool Bag

3. Secure the tool bag straps to the jack.

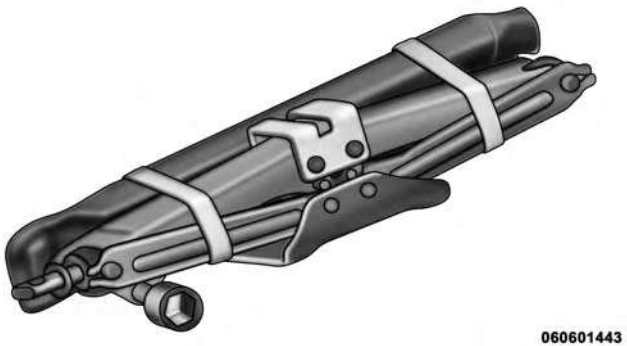

Jack And Tools Tied

4. Place the jack and tools in the storage position holding the jack by the jack turn-screw, slip the jack and tools under the seat so that the bottom slot engages into the fastener on the floor.

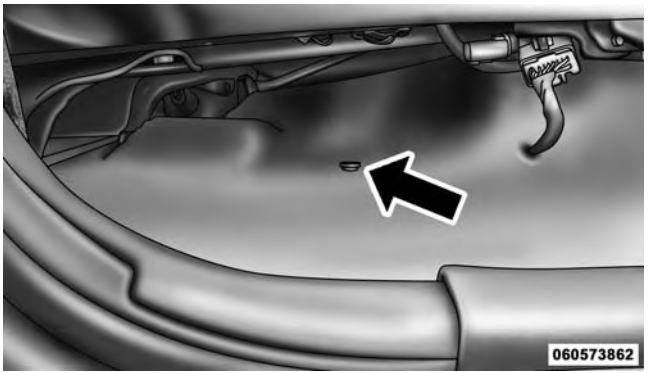

Jack Hold Down Fastener

NOTE: Ensure that the jack slides into the front hold down location.

5. Turn the wing bolt clockwise to secure to the floor pan. Reinstall the plastic cover.

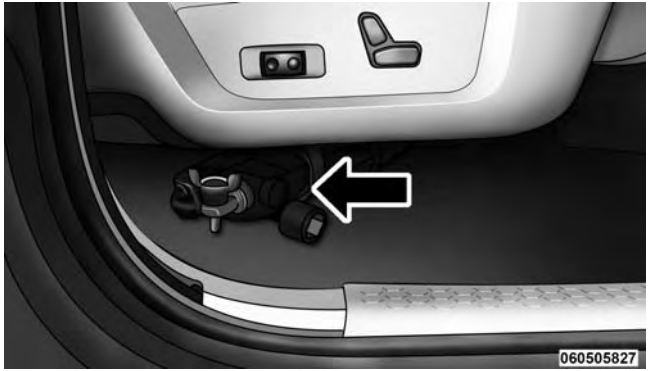

Jack And Tools (1500 Series)

WARNING!

After using the jack and tools, always reinstall them in the original carrier and location. While driving

(Continued)

WARNING! ***(Continued)***

you may experience abrupt stopping, rapid acceleration or sharp turns. A loose jack, tools, bracket or other objects in the vehicle may move around with force, resulting in serious injury.

Hub Caps/Wheel Covers — If Equipped

The hub caps must be removed before raising the vehicle off the ground.

CAUTION!

Use a back-and-forth motion to remove the hub cap. Do not use a twisting motion when removing the hub cap, damage to the hub cap finish may occur.

You must use the flat end of the lug wrench to pry off the wheel skins. Insert the flat tip completely and using a

back-and-forth motion, loosen the wheel skin. Repeat this procedure around the tire until the skin pops off.

Replace the wheel skins first using a rubber mallet. When replacing the hub caps, tilt the cap retainer over the lug nut bolt circle and strike the high side down with a rubber mallet. Be sure that the hub caps and wheel skins are firmly seated around the wheel.

Wheel Nuts

All wheel nuts should be tightened occasionally to eliminate the possibility of wheel studs being sheared or the bolt holes in the wheels becoming elongated. This is especially important during the first few hundred miles/kilometers of operation to allow the wheel nuts to become properly set. All wheel nuts should first be firmly seated against the wheel. The wheel nuts should then be tightened to recommended torque. Tighten the wheel nuts to final torque in increments. Progress around the bolt circle, tightening the wheel nut opposite to the wheel nut just previously tightened until final torque is achieved. Recommended torques are shown in the following chart.

Type Nut	Stud Size	Hex Size	Torque Ft Lbs	Torque Newton Meters
Cone	M14 x 1.5	22 mm	120-140	160-190
Flanged	M14 x 1.5	22 mm	130-160	175-215

JACKING AND TIRE CHANGING 2500 AND 3500 SERIES TRUCKS

WARNING!

- **Do not attempt to change a tire on the side of the vehicle close to moving traffic. Pull far enough off the road to avoid the danger of being hit when operating the jack or changing the wheel.**
- **Being under a jacked-up vehicle is dangerous. The vehicle could slip off the jack and fall on you. You could be crushed. Never put any part of your body under a vehicle that is on a jack. If you need to get under a raised vehicle, take it to a service center where it can be raised on a lift.**
- **Never start or run the engine while the vehicle is on a jack.**

(Continued)

WARNING! ***(Continued)***

- **The jack is designed to be used as a tool for changing tires only. The jack should not be used to lift the vehicle for service purposes. The vehicle should be jacked on a firm level surface only. Avoid ice or slippery areas.**

Jack Location

The jack and jack tools are stored under the front passenger seat.

Removal Of Jack And Tools (2500, 3500 Series)

To access the jack and jack tools you must remove the plastic access cover, located on the side of the front passengers seat. To remove the cover, pull the front part of the cover (closest to the front of the seat) toward you to release a locking tab. Once the front of the cover is loose, slide the cover toward the front of the seat until it is free from the seat frame.

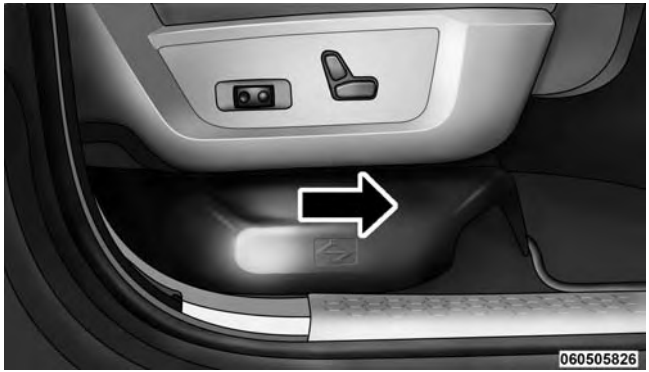

Jack Access Cover

Remove the jack and tools by turning the wing bolt counterclockwise, remove the wing bolt and then slide the assembly out from under the seat.

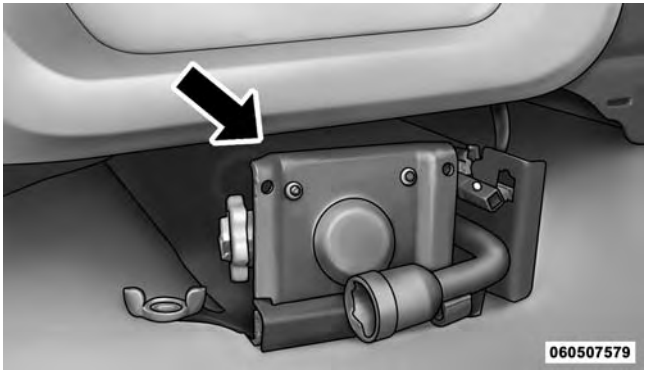

Jack And Tools (2500/3500 Series)

Remove the jack and tools from the bracket assembly. Turn the jack-turn-screw counterclockwise to release jack from bracket assembly.

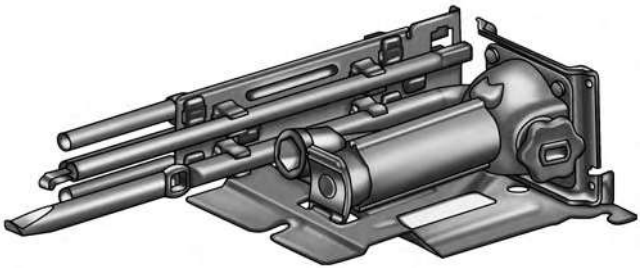

Jack And Tools Bracket Assembly

WARNING!

After using the jack and tools, always reinstall them in the original carrier and location. While driving

(Continued)

WARNING! ***(Continued)***

you may experience abrupt stopping, rapid acceleration or sharp turns. A loose jack, tools, bracket or other objects in the vehicle may move around with force, resulting in serious injury.

Removing The Spare Tire

1. Remove the spare tire before attempting to jack up the truck. Attach the wheel wrench to the jack extension tube with the curved angle facing away from the vehicle. Insert the tube through the access hole between the lower tailgate and the top of the bumper and into the winch mechanism tube.

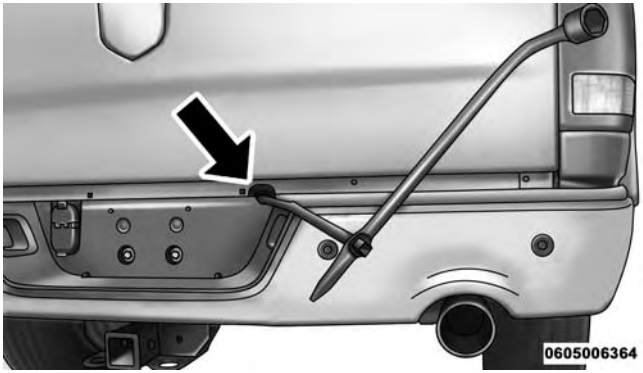

2. Rotate the wheel wrench handle counterclockwise until the spare tire is on the ground with enough cable slack to allow you to pull it out from under the vehicle.

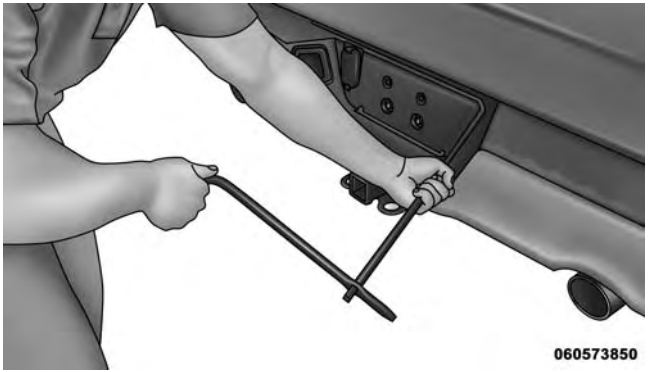

3. Pull the spare tire out from under the vehicle to gain access to the spare tire retainer.

4. Lift the spare tire with one hand to give clearance to tilt the retainer at the end of the cable.

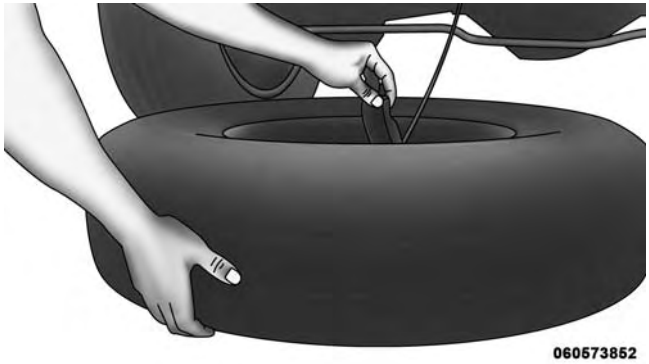

5. Pull the retainer through the center of the wheel.

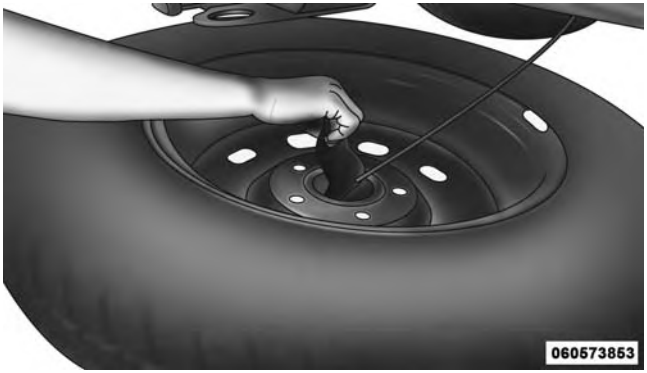

NOTE: The winch mechanism is designed for use with the jack extension tube only. Use of an air wrench or other power tools is not recommended and can damage the winch.

Preparations

1. Park the vehicle on a firm, level surface. Avoid ice or slippery areas.

WARNING!

Do not attempt to change a tire on the side of the vehicle close to moving traffic, pull far enough off the road to avoid the danger of being hit when operating the jack or changing the wheel.

2. Turn on the Hazard Warning flasher.
3. Set the parking brake.
4. Place the shift lever into PARK. On four-wheel drive vehicles, shift the transfer case to the 4L position.
5. Turn the ignition OFF.

Block both the front and rear of the wheel diagonally opposite the jacking position. For example, if the right front wheel is being changed, block the left rear wheel.

NOTE: Passengers should not remain in the vehicle when the vehicle is being jacked.

Jack Instructions (2500, 3500 Series)

WARNING!

Carefully follow these tire changing warnings to help prevent personal injury or damage to your vehicle:

- **Always park on a firm, level surface as far from the edge of the roadway as possible before raising the vehicle.**
- **Turn on the Hazard Warning flasher.**
- **Block the wheel diagonally opposite the wheel to be raised.**
- **Set the parking brake firmly and set an automatic transmission in PARK; a manual transmission in REVERSE.**
- **Never start or run the engine with the vehicle on a jack.**

(Continued)

WARNING! ***(Continued)***

- **Do not let anyone sit in the vehicle when it is on a jack.**
- **Do not get under the vehicle when it is on a jack. If you need to get under a raised vehicle, take it to a service center where it can be raised on a lift.**
- **Only use the jack in the positions indicated and for lifting this vehicle during a tire change.**
- **If working on or near a roadway, be extremely careful of motor traffic.**
- **To assure that spare tires, flat or inflated, are securely stowed, spares must be stowed with the valve stem facing the ground.**

Jack Warning Label

CAUTION!

Do not attempt to raise the vehicle by jacking on locations other than those indicated in the Jacking Instructions for this vehicle.

1. Remove the spare wheel, jack, and tools from storage.
2. Using the lug wrench, loosen, but do not remove, the wheel nuts by turning them counterclockwise one turn while the wheel is still on the ground.
3. Placement of the jack:

4x2 Series Trucks Front Jacking Location

For 2500 and 3500 4x2 series trucks, when changing a front wheel, place the bottle jack under the frame rail behind the wheel. Locate the jack as far forward as possible on the straight part of the frame.

Operate the jack using the jack drive tube and the wheel wrench. The tube extension, may be used, but is not required.

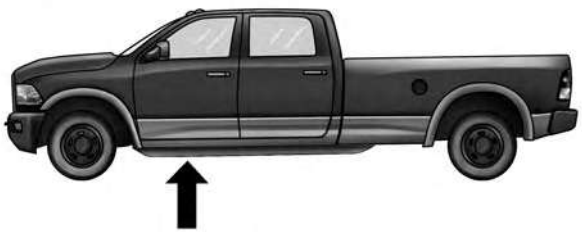

4x2 Front Jacking Location

4x4 Series Trucks Front Jacking Location

For 2500 and 3500 4x4 series trucks, when changing the front wheel, assemble the jack drive tube to the jack and connect the drive tube to the extension tube. Place the jack under the axle as close to the tire as possible with the drive tubes extending to the front. Connect the jack tube extension and wheel wrench.

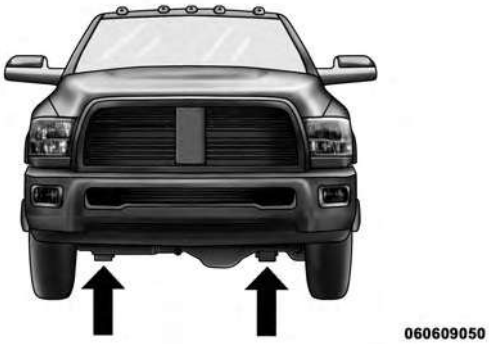

4x4 Front Jacking Location

4x2 and 4x4 Rear Jacking Location

For 4x2 and 4x4 trucks, when changing a rear wheel, assemble the jack drive tube to the jack and connect the drive tube to the extension tube. Place the jack under the axle between the spring and the shock absorber with the drive tubes extending to the rear.

Rear Jacking Location (All)

Connect the jack tube extension and wheel wrench.

CAUTION!

Before raising the wheel off the ground, make sure that the jack will not damage surrounding truck parts and adjust the jack position as required.

NOTE: If the bottle jack will not lower by turning the dial (thumbwheel) by hand, it may be necessary to use the jack drive tube in order to lower the jack.

4. By rotating the wheel wrench clockwise, raise the vehicle until the wheel just clears the surface.

WARNING!

Raising the vehicle higher than necessary can make the vehicle unstable and cause a collision. It could slip off the jack and hurt someone near it. Raise the vehicle only enough to remove the tire.

5. Remove the wheel nuts and pull the wheel off. On single rear-wheel (SRW) trucks, install the spare wheel and wheel nuts with the cone shaped end of the wheel nuts toward the wheel. On 3500 dual rear-wheel models (DRW) the wheel nuts are a two-piece assembly with a flat face. Lightly tighten the wheel nuts. To avoid the risk of forcing the vehicle off the jack, do not fully tighten the wheel nuts until the vehicle has been lowered.

6. Using the lug wrench, finish tightening the wheel nuts using a crisscross pattern. The correct wheel nut tightness for a cone type wheel nut is 120–140 ft lbs (160–190 N·m) torque, for a flanged type wheel nut is 130–160 ft lbs (175–215 N·m) torque. If in doubt about the correct tightness, have them checked with a torque wrench by your authorized dealer or at a service station.

WARNING!

A loose tire or jack thrown forward in a collision or hard stop could injure someone in the vehicle. Always stow the jack parts and the extra tire and wheel in the places provided.

7. Install the wheel center cap and remove the wheel blocks. Do not install chrome or aluminum wheel center caps on the spare wheel. This may result in cap damage.

8. Lower the jack to its fully closed position. If the bottle jack will not lower by turning the dial (thumbwheel) by hand, it may be necessary to use the jack drive tube in order to lower the jack. Stow the replaced tire, jack, and tools as previously described.

9. Adjust the tire pressure when possible.

NOTE: Do not oil wheel studs. For chrome wheels, do not substitute with chrome plated wheel nuts.

To Stow The Flat Or Spare

NOTE: Have the flat tire repaired or replaced immediately.

WARNING!

A loose tire thrown forward in a collision or hard stop could injure the occupants in the vehicle. Have the deflated (flat) tire repaired or replaced immediately.

1. Turn the wheel so that the valve stem is facing the ground and toward the rear of the vehicle for convenience in checking the spare tire inflation. Slide the wheel retainer through the center of the wheel.

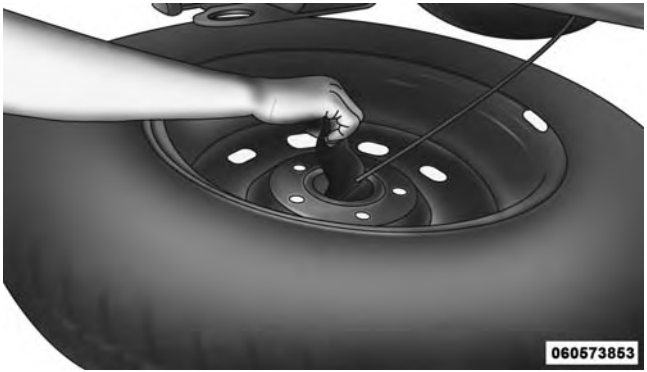

2. Lift the spare tire with one hand to give clearance to tilt the retainer at the end of the cable and position it properly across the wheel opening.

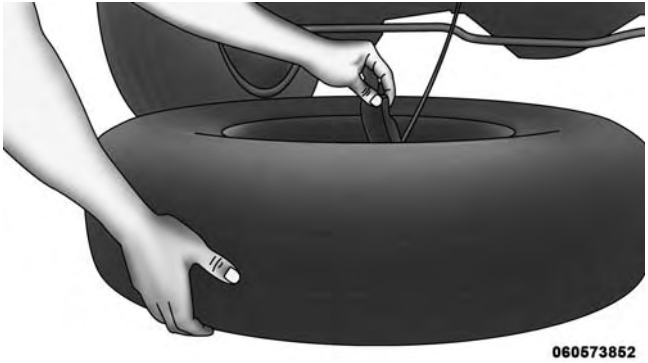

3. Attach the wheel wrench to the jack extension tube with the curved angle facing away from the vehicle. Insert the tube through the access hole between the lower tailgate and the top of the bumper and into the winch mechanism tube.

4. Rotate the lug wrench handle clockwise until the wheel is drawn into place against the underside of the vehicle. Continue to rotate until you feel the winch mechanism slip, or click three or four times. It cannot be overtightened. Push against the tire several times to ensure it is firmly in place.

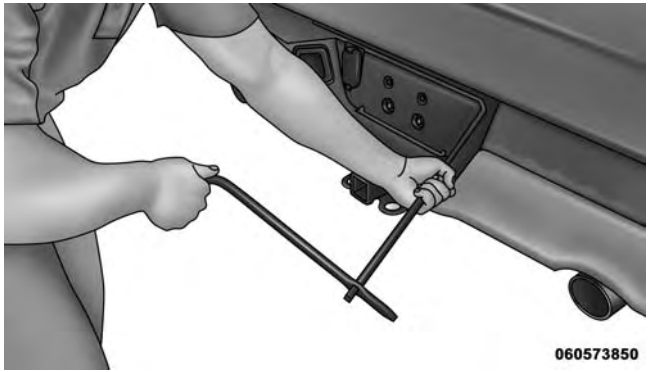

NOTE: The winch mechanism is designed for use with the jack extension tube only. Use of an air wrench or other power tools is not recommended and can damage the winch.

Reinstalling The Jack And Tools (2500 And 3500 Series)

1. Tighten the jack all the way down by turning the jack turn-screw counterclockwise until the jack is snug.
2. Position the jack and tools into bracket assembly. Make sure the lug wrench is under the jack near the jack turn-screw. Snap tools into bracket assembly clips. Install the jack into bracket assembly and turn the jack-turn-screw clockwise until jack is snug into bracket assembly.

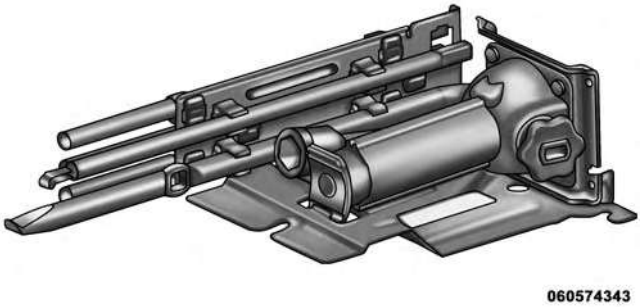

Jack And Tools Bracket Assembly

3. Place the jack and tool bracket assembly in the storage position holding the jack by the jack turn-screw, slip the jack and tools under the seat so that the bottom slot engages into the fastener on the floor.

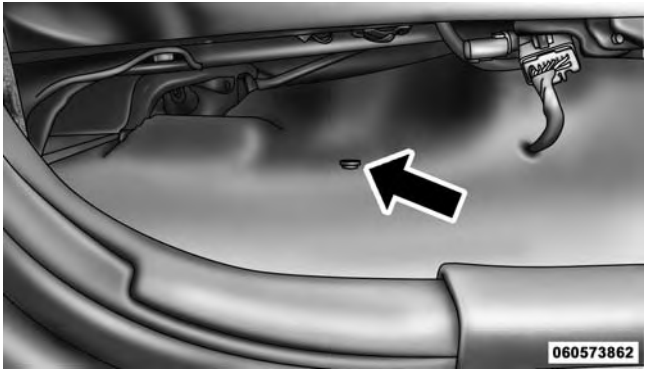

Jack Hold Down Fastener

NOTE: Ensure that the jack and tool bracket assembly slides into the front hold down location.

4. Turn the wing bolt clockwise to secure to the floor pan. Reinstall the plastic cover.

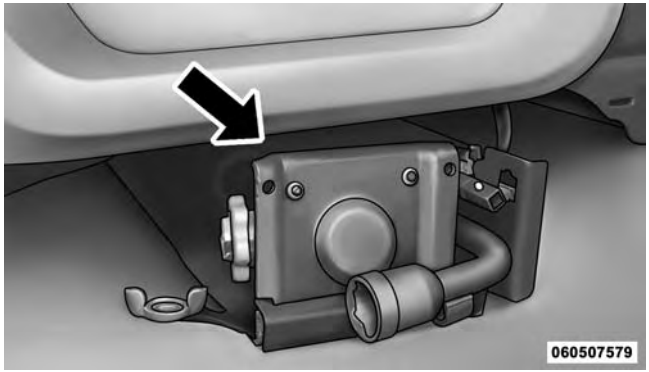

Jack And Tools (2500/3500 Series)

Hub Caps/Wheel Covers — If Equipped

The hub caps must be removed before raising the vehicle off the ground.

CAUTION!

Use extreme caution when removing the front and rear center caps. Damage can occur to the center cap and/or the wheel if screwdriver type tools are used. A pulling motion, not a pry off motion, is recommended to remove the caps.

For single rear wheel (SRW) models, use the blade on the end of the lug wrench to pry the hub cap off. Insert the blade end into the pry off notch and carefully pop off the hub cap with a back and forth motion.

On 3500 models with dual rear wheels (DRW), you must first remove the hub caps. The jack handle driver has a hook at one end that will fit in the pry off notch of the rear hub caps. Position the hook and pull out on the ratchet firmly. The hub cap should pop off. The wheel skins can now be removed. For the front hub cap on models use the blade on the end of the lug wrench to pry the caps off. The wheel skin can now be removed.

CAUTION!

- **Use a back and forth motion to remove the hub cap. Do not use a twisting motion when removing the hub cap, damage to the hub cap; finish may occur.**
- **The rear hub caps on the dual rear wheel has two pry off notches. Make sure that the hook of the jack handle driver is located squarely in the cap notch before attempting to pull off.**

You must use the flat end of the lug wrench to pry off the wheel skins. Insert the flat tip completely and using a back and forth motion, loosen the wheel skin. Repeat this procedure around the tire until the skin pops off.

Replace the wheel skins first using a rubber mallet. When replacing the hub caps, tilt the cap retainer over the lug nut bolt circle and strike the high side down with a rubber mallet. Be sure that the hub caps and wheel skins are firmly seated around the wheel.

Wheel Nuts

All wheel nuts should be tightened occasionally to eliminate the possibility of wheel studs being sheared or the bolt holes in the wheels becoming elongated. This is especially important during the first few hundred miles/kilometers of operation to allow the wheel nuts to become properly set. All wheel nuts should first be firmly seated against the wheel. The wheel nuts should then be tightened to recommended torque. Tighten the wheel

nuts to final torque in increments. Progress around the bolt circle, tightening the wheel nut opposite to the wheel nut just previously tightened until final torque is achieved. Recommended torques are shown in the following chart.

Type Nut	Stud Size	Hex Size	Torque Ft Lbs	Torque Newton Meters
Cone	M14 x 1.5	22 mm	120-140	160-190
Flanged	M14 x 1.5	22 mm	130-160	175-215

8-Stud — Dual Rear Wheels

Dual wheels are flat-mounted and center-piloted. The lug nuts are a two-piece assembly. When the tires are being rotated or replaced, clean these lug nuts and add two drops of oil at the interface between the hex and the washer.

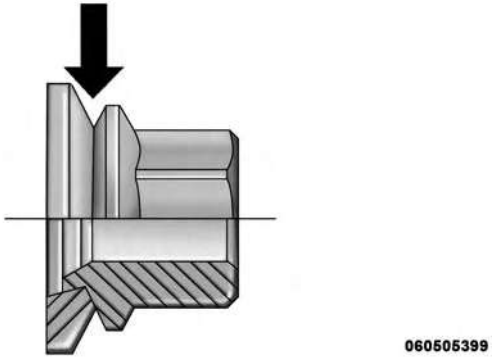

Oiling Location

Slots in the wheels will assist in properly orienting the inner and outer wheels. Align these slots when assembling the wheels for best access to the tire valve on the inner wheel. The tires of both dual wheels must be completely off the ground when tightening, to ensure wheel centering and maximum wheel clamping.

Dual wheel models require a special heavy-duty lug nut tightening adapter (included with the vehicle) to correctly tighten the lug nuts. Also, when it is necessary to remove and install dual rear wheels, use a proper vehicle lifting device.

NOTE: When installing a spare tire as part of a dual rear wheel end combination, the tire diameter of the two individual tires must be compared. If there is a significant difference, the larger tire should be installed in a front location. The correct direction of rotation for dual tire installations must also be observed.

These dual rear wheels should be tightened as follows:

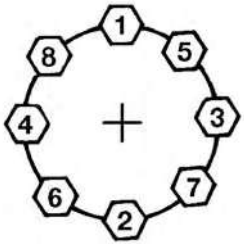

060505400

Tightening Pattern

1. Tighten the wheel nuts in the numbered sequence to a snug fit.
2. Retighten the wheel nuts in the same sequence to the torques listed in the table. Go through the sequence a second time to verify that specific torque has been achieved. Retighten to specifications at 100 miles (160 km) and after 500 miles (800 km).

It is recommended that wheel stud nuts be kept torqued to specifications at all times. Torque wheel stud nuts to specifications at each lubrication interval.

HOISTING

A conventional floor jack may be used at the jacking locations. Refer to the graphics that show jacking locations. However, a floor jack or frame hoist must never be used on any other parts of the underbody.

CAUTION!

Never use a floor jack directly under the differential housing of a loaded truck or damage to your vehicle may result.

JUMP-STARTING PROCEDURES

If your vehicle has a discharged battery it can be jump-started using a set of jumper cables and a battery in another vehicle or by using a portable battery booster pack. Jump-starting can be dangerous if done improperly so please follow the procedures in this section carefully.

NOTE: When using a portable battery booster pack follow the manufacturer's operating instructions and precautions.

CAUTION!

Do not use a portable battery booster pack or any other booster source with a system voltage greater than 12 Volts or damage to the battery, starter motor, alternator or electrical system may occur.

WARNING!

Do not attempt jump-starting if the battery is frozen. It could rupture or explode and cause personal injury.

Preparations For Jump-Start

The battery in your vehicle is located in the front of the engine compartment, behind the left headlight assembly.

NOTE: The positive battery post is covered with a protective cap. Lift up on the cap to gain access to the positive battery post.

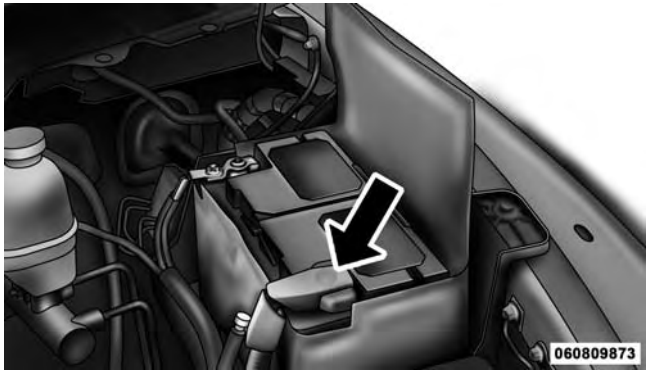

Positive Battery Post

WARNING!

- **Take care to avoid the radiator cooling fan whenever the hood is raised. It can start anytime the ignition switch is ON. You can be injured by moving fan blades.**
- **Remove any metal jewelry such as rings, watch bands and bracelets that could make an inadvertent electrical contact. You could be seriously injured.**
- **Batteries contain sulfuric acid that can burn your skin or eyes and generate hydrogen gas which is flammable and explosive. Keep open flames or sparks away from the battery.**

1. Set the parking brake, shift the automatic transmission into PARK and turn the ignition to LOCK.
2. Turn off the heater, radio, and all unnecessary electrical accessories.

3. If using another vehicle to jump-start the battery, park the vehicle within the jumper cables reach, set the parking brake and make sure the ignition is OFF.

WARNING!

Do not allow vehicles to touch each other as this could establish a ground connection and personal injury could result.

Jump-Starting Procedure

WARNING!

Failure to follow this procedure could result in personal injury or property damage due to battery explosion.

CAUTION!

Failure to follow these procedures could result in damage to the charging system of the booster vehicle or the discharged vehicle.

1. Connect the positive **(+)** end of the jumper cable to the positive **(+)** post of the discharged vehicle.
2. Connect the opposite end of the positive **(+)** jumper cable to the positive **(+)** post of the booster battery.
3. Connect the negative end **(-)** of the jumper cable to the negative **(-)** post of the booster battery.
4. Connect the opposite end of the negative **(-)** jumper cable to a good engine ground (exposed metal part of the discharged vehicle's engine) away from the battery and the fuel injection system.

WARNING!

Do not connect the cable to the negative post (-) of the discharged battery. The resulting electrical spark could cause the battery to explode and could result in personal injury.

5. Start the engine in the vehicle that has the booster battery, let the engine idle a few minutes, and then start the engine in the vehicle with the discharged battery.

Once the engine is started, remove the jumper cables in the reverse sequence:

6. Disconnect the negative **(-)** jumper cable from the engine ground of the vehicle with the discharged battery.
7. Disconnect the negative end **(-)** of the jumper cable from the negative **(-)** post of the booster battery.
8. Disconnect the opposite end of the positive **(+)** jumper cable from the positive **(+)** post of the booster battery.
9. Disconnect the positive **(+)**end of the jumper cable from the positive **(+)** post of the discharged vehicle.

If frequent jump-starting is required to start your vehicle you should have the battery and charging system inspected at your authorized dealer.

CAUTION!

Accessories plugged into the vehicle power outlets draw power from the vehicle's battery, even when not in use (i.e., cellular phones, etc.). Eventually, if plugged in long enough without engine operation, the vehicle's battery will discharge sufficiently to degrade battery life and/or prevent the engine from starting.

FREEING A STUCK VEHICLE

If your vehicle becomes stuck in mud, sand, or snow, it can often be moved using a rocking motion. Turn the steering wheel right and left to clear the area around the front wheels. Then shift back and forth between DRIVE and REVERSE (with automatic transmission) or 2nd gear and REVERSE (with manual transmission), while gently pressing the accelerator. Use the least amount of accelerator pedal pressure that will maintain the rocking motion, without spinning the wheels or racing the engine.

NOTE: For trucks equipped with 8-speed automatic transmission: Shifts between DRIVE and REVERSE can only be achieved at wheel speeds of 5 mph (8 km/h) or less. Whenever the transmission remains in NEUTRAL for more than 2 seconds, you must press the brake pedal to engage DRIVE or REVERSE.

CAUTION!

Racing the engine or spinning the wheels may lead to transmission overheating and failure. Allow the engine to idle with the transmission in NEUTRAL for at least one minute after every five rocking-motion cycles. This will minimize overheating and reduce the risk of transmission failure during prolonged efforts to free a stuck vehicle.

NOTE: Press the "ESC Off" switch, to place the Electronic Stability Control (ESC) system in "Partial Off" mode, before rocking the vehicle. Refer to "Electronic Brake Control" in "Starting And Operating" for further information. Once the vehicle has been freed, press the "ESC Off" switch again to restore "ESC On" mode.

CAUTION!

- **When "rocking" a stuck vehicle by shifting between DRIVE/2nd gear and REVERSE, do not spin the wheels faster than 15 mph (24 km/h), or drivetrain damage may result.**
- **Revving the engine or spinning the wheels too fast may lead to transmission overheating and failure. It can also damage the tires. Do not spin the wheels above 30 mph (48 km/h) while in gear (no transmission shifting occurring).**

WARNING!

Fast spinning tires can be dangerous. Forces generated by excessive wheel speeds may cause damage, or even failure, of the axle and tires. A tire could

(Continued)

WARNING! ***(Continued)***

explode and injure someone. Do not spin your vehicle's wheels faster than 30 mph (48 km/h) or for longer than 30 seconds continuously without stopping when you are stuck and do not let anyone near a spinning wheel, no matter what the speed.

EMERGENCY TOW HOOKS — IF EQUIPPED

Your vehicle may be equipped with emergency tow hooks.

NOTE: For off-road recovery, it is recommended to use both of the front tow hooks to minimize the risk of damage to the vehicle.

WARNING!

- **Do not use a chain for freeing a stuck vehicle. Chains may break, causing serious injury or death.**
- **Stand clear of vehicles when pulling with tow hooks. Tow straps may become disengaged, causing serious injury.**

CAUTION!

Tow hooks are for emergency use only to rescue a vehicle stranded off-road. Do not use tow hooks for tow truck hookup or highway towing. You could damage your vehicle.

SHIFT LEVER OVERRIDE

If a malfunction occurs and the shift lever cannot be moved out of the PARK position, you can use one of the following procedures to temporarily move the shift lever:

Column Shifter — If Equipped

1. Turn the engine off.
2. Firmly apply the parking brake.
3. Tilt the steering wheel to the full up position.
4. Press and maintain firm pressure on the brake pedal.
5. Insert a screwdriver or similar tool, into the access port (ringed circle) on the bottom of the steering column and push and hold the override release lever up.

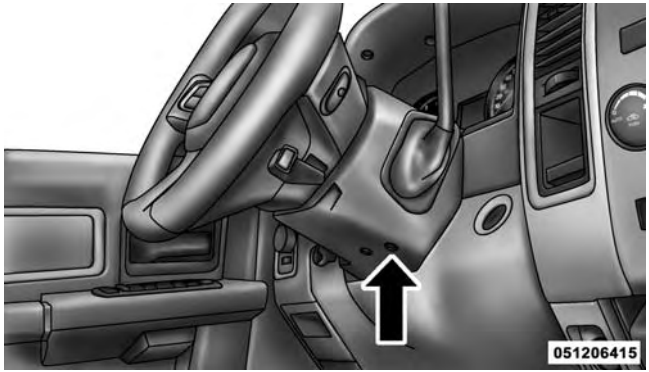

Shift Lever Override Access Port

6. Move the shift lever to the NEUTRAL position.
7. The vehicle may then be started in NEUTRAL.

Center Console Shifter — If Equipped

1. Turn the engine off.
2. Firmly apply the parking brake.
3. Using a small screwdriver or similar tool, remove the shift lever override access cover (located to the right of the shift lever).
4. Press and maintain firm pressure on the brake pedal.
5. Insert the screwdriver or similar tool into the access hole, and push and hold the override release lever down.

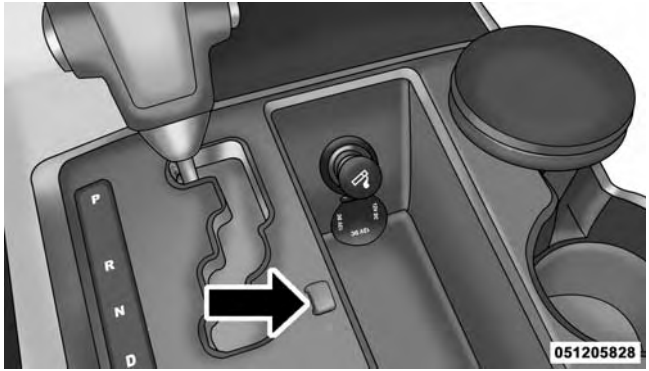

Shift Lever Override Access Cover

6. Move the shift lever to the NEUTRAL position.
7. The vehicle may then be started in NEUTRAL.
8. Reinstall the shift lever override access cover.

MANUAL PARK RELEASE — 8 SPEED TRANSMISSION

WARNING!

Always secure your vehicle by fully applying the parking brake, before activating the Manual Park Release. Activating the Manual Park Release will allow your vehicle to roll away if it is not secured by the parking brake or by proper connection to a tow vehicle. Activating the Manual Park Release on an unsecured vehicle could lead to serious injury or death for those in or around the vehicle.

In order to push or tow the vehicle in cases where the transmission will not shift out of PARK (such as a dead battery), a Manual Park Release is available.

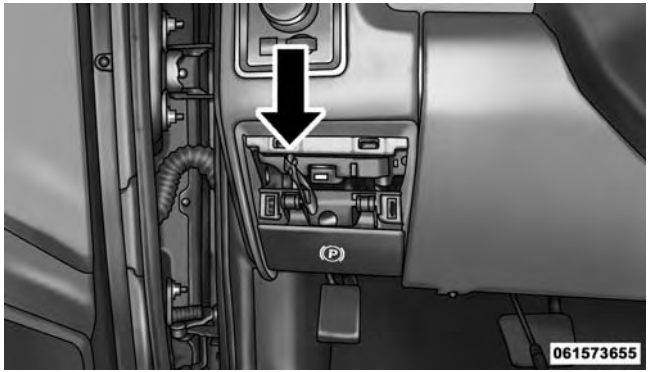

Manual Park Release Pull Strap

Follow these steps to use the Manual Park Release:

1. Firmly apply the parking brake.
2. Using a small screwdriver or similar tool, remove the Manual Park Release access cover, which is just above the parking brake release handle, below and to the left of the steering column.
3. Using the screwdriver or similar tool, push the Manual Park Release lever locking tab (just below the middle of the lever) to the right.
4. While holding the locking tab in the disengaged position, pull the tether strap to rotate the lever rearward, until it locks in place pointing towards the driver's seat. Release the locking tab and verify that the Manual Park Release lever is locked in the released position.
5. The vehicle is now out of PARK and can be towed. Release the parking brake only when the vehicle is securely connected to a tow vehicle.

To Reset The Manual Park Release:

1. Push the locking tab to the right, to unlock the lever.
2. Rotate the Manual Park Release lever forward to its original position, until the locking tab snaps into place to secure the lever.
3. Pull gently on the tether strap to confirm that the lever is locked in its stowed position.
4. Re-install the access cover.

TOWING A DISABLED VEHICLE

This section describes procedures for towing a disabled vehicle using a commercial wrecker service. If the transmission and drivetrain are operable, disabled vehicles may also be towed as described under “Recreational Towing” in the “Starting and Operating” section.

NOTE: Vehicles equipped with air suspension must be lowered , and placed in transport mode, before tying them down (from the body) on a trailer or flatbed truck. Refer to ″Air Suspension″ in ″Starting and Operating″ for more information. If the vehicle cannot be lowered to the transport mode (for example, engine will not run), tie-downs must be fastened to the axles (not to the body). Failure to follow these instructions may cause fault codes to be set and/or cause loss of proper tie-down tension.

Towing Condition	Wheels OFF the Ground	2WD Models	4WD Models
Flat Tow	NONE	**If transmission is operable:** • Transmission in **NEUTRAL** • 30 mph (48 km/h) **max speed** • 15 miles (24 km) **max** distance (6–speed transmission) • 30 miles (48 km) **max** distance (8–speed transmission)	**See instructions in "Recreational Towing" under "Starting and Operating"** • Automatic Transmission in **PARK** • Manual Transmission in gear (**NOT** NEUTRAL) • Transfer Case in **NEUTRAL (N)** • Tow in **forward** direction
Wheel Lift or Dolly Tow	Front		**NOT ALLOWED**
	Rear	OK	**NOT ALLOWED**
Flatbed	**ALL**	**BEST METHOD**	**BEST METHOD**

Proper towing or lifting equipment is required to prevent damage to your vehicle. Use only tow bars and other equipment designed for this purpose, following equipment manufacturer's instructions. Use of safety chains is mandatory. Attach a tow bar or other towing device to main structural members of the vehicle, not to bumpers or associated brackets. State and local laws regarding vehicles under tow must be observed.

If you must use the accessories (wipers, defrosters, etc.) while being towed, the ignition must be in the ON/RUN position, not the ACC position.

If the key fob is unavailable or the vehicle's battery is discharged, see "Manual Park Release" or "Shift Lever Override" in this section for instructions on shifting the automatic transmission out of PARK for towing.

CAUTION!

Do not use sling type equipment when towing. When securing the vehicle to a flat bed truck, do not attach to front or rear suspension components. Damage to your vehicle may result from improper towing.

Two-Wheel Drive Models

The manufacturer recommends towing your vehicle with all four wheels **OFF** the ground using a flatbed.

If flatbed equipment is not available, and the transmission is operable, this vehicle may be towed (with rear wheels on the ground) under the following conditions:

- The transmission must be in NEUTRAL.
- The towing speed must not exceed 30 mph (48 km/h).
- The towing distance must not exceed 15 miles (24 km) for 6-speed transmission, or 30 miles (48 km) for 8-speed transmission.

If the transmission is not operable, or the vehicle must be towed faster than 30 mph (48 km/h) or farther than 15 miles (24 km), for 6-speed transmission, or 30 miles (48 km) for 8-speed transmission, tow with the rear wheels **OFF** the ground. Acceptable methods are to tow the vehicle on a flatbed, or with the front wheels raised and the rear wheels on a towing dolly, or (when using a suitable steering wheel stabilizer to hold the front wheels

in the straight position) with the rear wheels raised and the front wheels on the ground.

CAUTION!

Towing this vehicle in violation of the above requirements can cause severe engine and/or transmission damage. Damage from improper towing is not covered under the New Vehicle Limited Warranty.

Four-Wheel Drive Models

The manufacturer recommends towing with all wheels **OFF** the ground. Acceptable methods are to tow the vehicle on a flatbed or with one end of vehicle raised and the opposite end on a towing dolly.

If flatbed equipment is not available, and the transfer case is operable, the vehicle may be towed (in the forward direction, with **ALL** wheels on the ground), **IF** the transfer case is in NEUTRAL (N) and the transmission is in **PARK** (for automatic transmissions) or in gear (NOT in Neutral, for manual transmissions). Refer to "Recreational Towing" in "Starting And Operating" for detailed instructions.

CAUTION!

- **Front or rear wheel lifts must not be used. Internal damage to the transmission or transfer case will occur if a front or rear wheel lift is used when towing.**
- **Towing this vehicle in violation of the above requirements can cause severe transmission and/or transfer case damage. Damage from improper towing is not covered under the New Vehicle Limited Warranty.**

MAINTAINING YOUR VEHICLE

CONTENTS

- ENGINE COMPARTMENT — 3.6L 668
- ENGINE COMPARTMENT — 5.7L 669
- ENGINE COMPARTMENT — 6.4L 670
- ONBOARD DIAGNOSTIC SYSTEM (OBD II) . . .671
  - Loose Fuel Filler Cap Message 671
- EMISSIONS INSPECTION AND MAINTENANCE PROGRAMS 672
- REPLACEMENT PARTS 673
- DEALER SERVICE 673
- MAINTENANCE PROCEDURES 674
  - Engine Oil 675
  - Engine Oil Filter 678
  - Engine Air Cleaner Filter 679
  - Maintenance-Free Battery 679
  - Air Conditioner Maintenance 681
  - Front Driveshaft Lubrication – 2500/3500 (Four-Wheel Drive) Models (Ram Trucks Only) 682

- Body Lubrication 682
- Windshield Wiper Blades 683
- Adding Washer Fluid 683
- Exhaust System 684
- Cooling System 687
- Brake System 694
- Rear Axle And 4x4 Front Driving Axle Fluid Level 696
- Transfer Case 697
- Automatic Transmission 698
- Appearance Care And Protection From Corrosion 702

■ FUSES 709
- POWER DISTRIBUTION CENTER 709

■ VEHICLE STORAGE 720

■ REPLACEMENT BULBS 720

■ BULB REPLACEMENT 722
- Base Quad / Premium Bi-Halogen: Low Beam Headlamp, High Beam Headlamp, Front Park And Turn – If Equipped 722
- Fog Lamps – If Equipped 725
- Rear Tail/Stop, Turn Signal And Backup Lamps 725
- Center High-Mounted Stoplamp (CHMSL) With Cargo Lamp 727

□ Cab Top Clearance Lamps – If Equipped 729

□ Rear Lamp Bar ID Marker (Dual Rear Wheels) — If Equipped 730

□ Side Marker Lamps (Dual Rear Wheels) — If Equipped 731

■ FLUID CAPACITIES 732

■ FLUIDS, LUBRICANTS AND GENUINE PARTS 734

□ Engine 734

□ Chassis 736

ENGINE COMPARTMENT — 3.6L

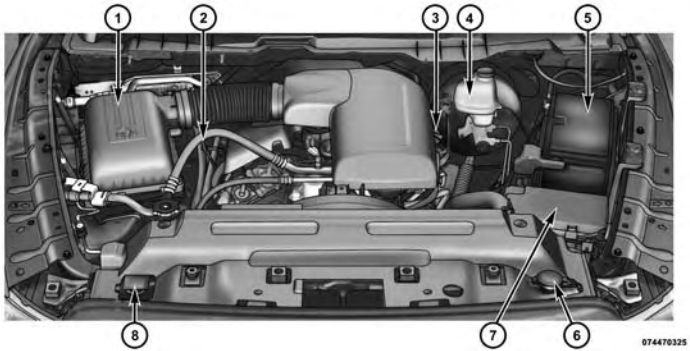

1 — Air Cleaner Filter
2 — Engine Oil Dipstick
3 — Engine Oil Fill
4 — Brake Fluid Reservoir
5 — Battery
6 — Washer Fluid Reservoir
7 — Power Distribution Center (Fuses)
8 — Engine Coolant Reservoir

ENGINE COMPARTMENT — 5.7L

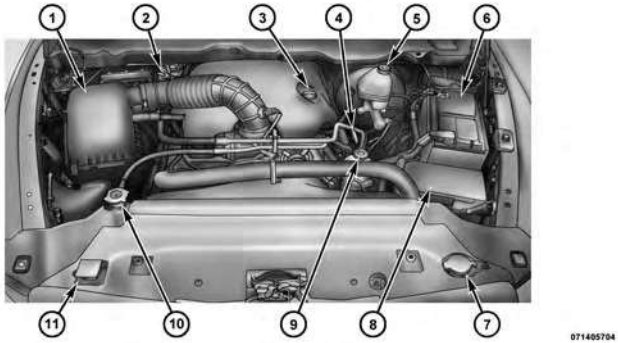

1 — Air Cleaner Filter
2 — Automatic Transmission Dipstick (6-Speed Trans Only)
3 — Engine Oil Fill
4 — Engine Oil Dipstick
5 — Brake Fluid Reservoir
6 — Battery
7 — Washer Fluid Reservoir
8 — Power Distribution Center (Fuses)
9 — Power Steering Fluid Reservoir (2500/3500 Models Only)
10 — Coolant Pressure Cap
11 — Engine Coolant Reservoir

ENGINE COMPARTMENT — 6.4L

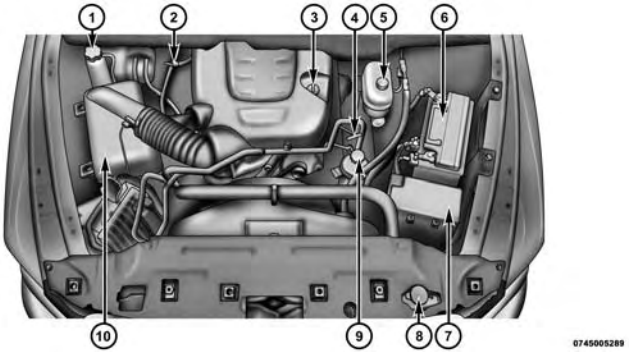

1 — Coolant Pressure Bottle
2 — Transmission Dipstick
3 — Engine Oil Fill
4 — Engine Oil Dipstick
5 — Brake Fluid Reservoir
6 — Battery
7 — Power Distribution Center (PDC)
8 — Washer Solvent
9 — Power Steering Fluid Reservoir
10 — Air Cleaner Filter

ONBOARD DIAGNOSTIC SYSTEM (OBD II)

Your vehicle is equipped with a sophisticated onboard diagnostic system called OBD II. This system monitors the performance of the emissions, engine, and automatic transmission control systems. When these systems are operating properly, your vehicle will provide excellent performance and fuel economy, as well as engine emissions well within current government regulations.

If any of these systems require service, the OBD II system will turn on the "Malfunction Indicator Light (MIL)." It will also store diagnostic codes and other information to assist your service technician in making repairs. Although your vehicle will usually be drivable and not need towing, see your authorized dealer for service as soon as possible.

CAUTION!

- **Prolonged driving with the MIL on could cause further damage to the emission control system. It could also affect fuel economy and drivability. The vehicle must be serviced before any emissions tests can be performed.**
- **If the MIL is flashing, while the engine is running, severe catalytic converter damage and power loss will soon occur. Immediate service is required.**

Loose Fuel Filler Cap Message

If the vehicle diagnostic system determines that the fuel filler cap is loose, improperly installed, or damaged, a loose gascap indicator will display in the EVIC telltale display area. Refer to "Electronic Vehicle Information Center (EVIC) in "Understanding Your Instrument Panel" for further information. Tighten the fuel filler cap properly and press

the SELECT button to turn off the message. If the problem continues, the message will appear the next time the vehicle is started.

A loose, improperly installed, or damaged fuel filler cap may also turn on the Malfunction Indicator Light (MIL).

EMISSIONS INSPECTION AND MAINTENANCE PROGRAMS

In some localities, it may be a legal requirement to pass an inspection of your vehicle's emissions control system. Failure to pass could prevent vehicle registration.

For states that require an Inspection and Maintenance (I/M), this check verifies the "Malfunction Indicator Light (MIL)" is functioning and is not on when the engine is running, and that the OBD II system is ready for testing.

Normally, the OBD II system will be ready. The OBD II system may **not** be ready if your vehicle was recently serviced, recently had a dead battery or a battery replacement. If the OBD II system should be determined not ready for the I/M test, your vehicle may fail the test.

Your vehicle has a simple ignition key-actuated test, which you can use prior to going to the test station. To check if your vehicle's OBD II system is ready, you must do the following:

1. Cycle the ignition switch to the ON position, but do not crank or start the engine.
2. If you crank or start the engine, you will have to start this test over.
3. As soon as you cycle the ignition switch to the ON position, you will see the MIL symbol come on as part of a normal bulb check.

4. Approximately 15 seconds later, one of two things will happen:

- The MIL will flash for about 10 seconds and then return to being fully illuminated until you turn OFF the ignition or start the engine. This means that your vehicle's OBD II system is **not ready** and you should **not** proceed to the I/M station.
- The MIL will not flash at all and will remain fully illuminated until you turn OFF the ignition or start the engine. This means that your vehicle's OBD II system is **ready** and you can proceed to the I/M station.

If your OBD II system is **not ready,** you should see your authorized dealer or repair facility. If your vehicle was recently serviced or had a battery failure or replacement, you may need to do nothing more than drive your vehicle as you normally would in order for your OBD II system to update. A recheck with the above test routine may then indicate that the system is now ready.

Regardless of whether your vehicle's OBD II system is ready or not, if the MIL is illuminated during normal vehicle operation you should have your vehicle serviced before going to the I/M station. The I/M station can fail your vehicle because the MIL is on with the engine running.

REPLACEMENT PARTS

Use of genuine MOPAR® parts for normal/scheduled maintenance and repairs is highly recommended to ensure the designed performance. Damage or failures caused by the use of non-MOPAR® parts for maintenance and repairs will not be covered by the New Vehicle Limited Warranty.

DEALER SERVICE

Your authorized dealer has the qualified service personnel, special tools, and equipment to perform all service operations in an expert manner. Service Manuals are

available which include detailed service information for your vehicle. Refer to these Service Manuals before attempting any procedure yourself.

NOTE: Intentional tampering with emissions control systems may void your warranty and could result in civil penalties being assessed against you.

WARNING!

You can be badly injured working on or around a motor vehicle. Only do service work for which you have the knowledge and the proper equipment. If you have any doubt about your ability to perform a service job, take your vehicle to a competent mechanic.

MAINTENANCE PROCEDURES

The pages that follow contain the **required** maintenance services determined by the engineers who designed your vehicle.

Besides those maintenance items specified in the fixed maintenance schedule, there are other components which may require servicing or replacement in the future.

CAUTION!

- **Failure to properly maintain your vehicle or perform repairs and service when necessary could result in more costly repairs, damage to other components or negatively impact vehicle performance. Immediately have potential malfunctions examined by an authorized dealer or qualified repair center.**

(Continued)

CAUTION! *(Continued)*

- **Your vehicle has been built with improved fluids that protect the performance and durability of your vehicle and also allow extended maintenance intervals. Do not use chemical flushes in these components as the chemicals can damage your engine, transmission, power steering or air conditioning. Such damage is not covered by the New Vehicle Limited Warranty. If a flush is needed because of component malfunction, use only the specified fluid for the flushing procedure.**

Engine Oil

Checking Oil Level

To assure proper lubrication of your vehicle's engine, the engine oil must be maintained at the correct level. Check the oil level at regular intervals, such as every fuel stop. The best time to check the engine oil level is about five minutes after a fully warmed up engine is shut off.

Checking the oil while the vehicle is on level ground will improve the accuracy of the oil level readings. Always maintain the oil level within the SAFE zone on the dipstick. Adding one quart of oil when the reading is at the bottom of the SAFE zone will result in a reading at the top of the safe zone on these engines.

CAUTION!

Overfilling or underfilling the crankcase will cause oil aeration or loss of oil pressure. This could damage your engine.

Change Engine Oil

The oil change indicator system will remind you that it is time to take your vehicle in for scheduled maintenance. Refer to the "Maintenance Schedule" for further information.

NOTE: Under no circumstances should oil change intervals exceed 10,000 miles (16,000 km) or twelve months, whichever occurs first.

Engine Oil Selection

For best performance and maximum protection under all types of operating conditions, the manufacturer only recommends engine oils that are API Certified and meet the requirements of Chrysler Material Standard MS-6395.

American Petroleum Institute (API) Engine Oil Identification Symbol

This symbol means that the oil has been certified by the American Petroleum Institute (API). The manufacturer only recommends API Certified engine oils.

CAUTION!

Do not use chemical flushes in your engine oil as the chemicals can damage your engine. Such damage is not covered by the New Vehicle Limited Warranty.

Engine Oil Viscosity – 3.6L/5.7L Engines (1500 Models Only)

MOPAR SAE 5W-20 engine oil or equivalent Pennzoil® or Shell Helix® is recommended for all operating temperatures. This engine oil improves low temperature starting and vehicle fuel economy.

The engine oil filler cap also shows the recommended engine oil viscosity for your vehicle. For information on engine oil filler cap location, refer to "Engine Compartment" in "Maintaining Your Vehicle" for further information.

NOTE: SAE 5W-30 engine oil approved to Fiat 9.55535-S1 or Fiat 9.55535-S3 may be used when SAE 5W-20 engine oil meeting MS-6395 is not available.

Engine Oil Viscosity – 5.7L Engine (2500/3500 Models Only)

MOPAR SAE 5W-20 engine oil or equivalent Pennzoil® or Shell Helix® is recommended for all operating temperatures. This engine oil improves low temperature starting and vehicle fuel economy. The engine oil filler cap also shows the recommended engine oil viscosity for your engine. For information on engine oil filler cap location, refer to "Engine Compartment" in "Maintaining Your Vehicle" for further information.

NOTE: Vehicles equipped with a 5.7L engine must use SAE 5W-20 oil. Failure to do so may result in improper operation of the Multi-Displacement System (MDS). Refer to "Multi-Displacement System" in "Starting and Operating" for further information.

Lubricants which do not have both the engine oil certification mark and the correct SAE viscosity grade number should not be used.

NOTE: For 2500/3500 trucks with a 5.7L engine operating under a gross combined weight rating of 14,000 lbs (6 350 kg) or greater, SAE 5W-30 engine oil is recommended for all operating temperatures.

Engine Oil Viscosity – 6.4L Engine

Use Pennzoil UltraTM 0W40 engine or equivalent MOPAR oil meeting the Chrysler Material Standard MS-12633 for use in all operating temperatures.

The engine oil filler cap also shows the recommended engine oil viscosity for your engine. For information on engine oil filler cap location, refer to the "Engine Compartment" in this section.

Synthetic Engine Oils

You may use synthetic engine oils provided the recommended oil quality requirements are met, and the recommended maintenance intervals for oil and filter changes are followed.

Disposing Of Used Engine Oil And Oil Filters

Care should be taken in disposing of used engine oil and oil filters from your vehicle. Used oil and oil filters, indiscriminately discarded, can present a problem to the environment. Contact your authorized dealer, service station or governmental agency for advice on how and where used oil and oil filters can be safely discarded in your area.

Engine Oil Filter

The engine oil filter should be replaced with a new filter at every engine oil change.

Engine Oil Filter Selection

This manufacturer's engines have a full-flow type oil filter. Use a filter of this type for replacement. The quality of replacement filters varies considerably. Only high

quality filters should be used to assure most efficient service. MOPAR® engine oil filters are a high quality oil filter and are recommended.

Engine Air Cleaner Filter

Refer to the "Maintenance Schedule" for the proper maintenance intervals.

WARNING!

The air induction system (air cleaner, hoses, etc.) can provide a measure of protection in the case of engine backfire. Do not remove the air induction system (air cleaner, hoses, etc.) unless such removal is necessary for repair or maintenance. Make sure that no one is near the engine compartment before starting the vehicle with the air induction system (air cleaner, hoses, etc.) removed. Failure to do so can result in serious personal injury.

Engine Air Cleaner Filter Selection

The quality of replacement engine air cleaner filters varies considerably. Only high quality filters should be used to assure most efficient service. MOPAR® engine air cleaner filters are a high quality filter and are recommended.

Maintenance-Free Battery

Your vehicle is equipped with a maintenance-free battery. You will never have to add water, nor is periodic maintenance required.

WARNING!

- **Battery fluid is a corrosive acid solution and can burn or even blind you. Do not allow battery fluid to contact your eyes, skin, or clothing. Do not lean over a battery when attaching clamps. If acid splashes in eyes or on skin, flush the area immediately with large amounts of water. Refer to "Jump-Starting Procedures" in "What To Do In Emergencies" for further information.**
- **Battery gas is flammable and explosive. Keep flame or sparks away from the battery. Do not use a booster battery or any other booster source with an output greater than 12 Volts. Do not allow cable clamps to touch each other.**
- **Battery posts, terminals, and related accessories contain lead and lead compounds. Wash hands after handling.**

CAUTION!

- **It is essential when replacing the cables on the battery that the positive cable is attached to the positive post and the negative cable is attached to the negative post. Battery posts are marked positive (+) and negative (-) and are identified on the battery case. Cable clamps should be tight on the terminal posts and free of corrosion.**
- **If a "fast charger" is used while the battery is in the vehicle, disconnect both vehicle battery cables before connecting the charger to the battery. Do not use a "fast charger" to provide starting voltage.**

Air Conditioner Maintenance

For best possible performance, your air conditioner should be checked and serviced by an authorized dealer at the start of each warm season. This service should include cleaning of the condenser fins and a performance test. Drive belt tension should also be checked at this time.

CAUTION!

Do not use chemical flushes in your air conditioning system as the chemicals can damage your air conditioning components. Such damage is not covered by the New Vehicle Limited Warranty.

WARNING!

- **Use only refrigerants and compressor lubricants approved by the manufacturer for your air conditioning system. Some unapproved refrigerants are flammable and can explode, injuring you. Other unapproved refrigerants or lubricants can cause the system to fail, requiring costly repairs. Refer to Warranty Information Book, located on the DVD, for further warranty information.**
- **The air conditioning system contains refrigerant under high pressure. To avoid risk of personal injury or damage to the system, adding refrigerant or any repair requiring lines to be disconnected should be done by an experienced technician.**

Refrigerant Recovery And Recycling

R-134a Air Conditioning Refrigerant is a hydrofluorocarbon (HFC) that is endorsed by the Environmental Protection Agency and is an ozone-saving product. However, the manufacturer recommends that air conditioning service be performed by authorized dealer or other service facilities using recovery and recycling equipment.

NOTE: Use only manufacturer approved A/C system sealers, stop leak products, seal conditioners, compressor oil, and refrigerants.

Front Driveshaft Lubrication – 2500/3500 (Four-Wheel Drive) Models (Ram Trucks Only)

Lubricate the front driveshaft grease fitting at each oil change. Refer to the "Maintenance Schedule" for the proper maintenance intervals. Use MOPAR® Type MS-6560 (lithium-based grease), or equivalent.

Body Lubrication

Locks and all body pivot points, including such items as seat tracks, door hinge pivot points and rollers, liftgate, tailgate, sliding doors and hood hinges, should be lubricated periodically with a lithium based grease, such as MOPAR® Spray White Lube to assure quiet, easy operation and to protect against rust and wear. Prior to the application of any lubricant, the parts concerned should be wiped clean to remove dust and grit; after lubricating excess oil and grease should be removed. Particular attention should also be given to hood latching components to ensure proper function. When performing other underhood services, the hood latch, release mechanism and safety catch should be cleaned and lubricated.

The external lock cylinders should be lubricated twice a year, preferably in the Fall and Spring. Apply a small amount of a high quality lubricant, such as MOPAR® Lock Cylinder Lubricant directly into the lock cylinder.

Windshield Wiper Blades

Clean the rubber edges of the wiper blades and the windshield periodically with a sponge or soft cloth and a mild nonabrasive cleaner. This will remove accumulations of salt or road film.

Operation of the wipers on dry glass for long periods may cause deterioration of the wiper blades. Always use washer fluid when using the wipers to remove salt or dirt from a dry windshield.

Avoid using the wiper blades to remove frost or ice from the windshield. Keep the blade rubber out of contact with petroleum products such as engine oil, gasoline, etc.

NOTE: Life expectancy of wiper blades varies depending on geographical area and frequency of use. Poor performance of blades may be present with chattering, marks, water lines or wet spots. If any of these conditions are present, clean the wiper blades or replace as necessary.

Adding Washer Fluid

The fluid reservoir is located under the hood and should be checked for fluid level at regular intervals. Fill the reservoir with windshield washer solvent only (not radiator antifreeze). When refilling the washer fluid reservoir, take some washer fluid and apply it to a cloth or towel and wipe the wiper blades clean. This will help blade performance.

To prevent freeze-up of your windshield washer system in cold weather, select a solution or mixture that meets or exceeds the temperature range of your climate. This rating information can be found on most washer fluid containers.

WARNING!

Commercially available windshield washer solvents are flammable. They could ignite and burn you. Care must be exercised when filling or working around the washer solution.

After the engine has warmed up, operate the defroster for a few minutes to reduce the possibility of smearing or freezing the fluid on the cold windshield. Windshield washer solution used with water as directed on the container, aids cleaning action, reduces the freezing point to avoid line clogging, and is not harmful to paint or trim.

Exhaust System

The best protection against carbon monoxide entry into the vehicle body is a properly maintained engine exhaust system.

If you notice a change in the sound of the exhaust system; or if the exhaust fumes can be detected inside the vehicle; or when the underside or rear of the vehicle is damaged; have an authorized technician inspect the complete exhaust system and adjacent body areas for broken, damaged, deteriorated, or mispositioned parts. Open seams or loose connections could permit exhaust fumes to seep into the passenger compartment. In addition, have the exhaust system inspected each time the vehicle is raised for lubrication or oil change. Replace as required.

WARNING!

- **Exhaust gases can injure or kill. They contain carbon monoxide (CO), which is colorless and odorless. Breathing it can make you unconscious and can eventually poison you. To avoid breathing CO, refer to "Safety Tips/Exhaust Gas" in "Things To Know Before Starting Your Vehicle" for further information.**
- **A hot exhaust system can start a fire if you park over materials that can burn. Such materials might be grass or leaves coming into contact with your exhaust system. Do not park or operate your vehicle in areas where your exhaust system can contact anything that can burn.**

CAUTION!

- **The catalytic converter requires the use of unleaded fuel only. Leaded gasoline will destroy the effectiveness of the catalyst as an emissions control device and may seriously reduce engine performance and cause serious damage to the engine.**
- **Damage to the catalytic converter can result if your vehicle is not kept in proper operating condition. In the event of engine malfunction, particularly involving engine misfire or other apparent loss of performance, have your vehicle serviced promptly. Continued operation of your vehicle with a severe malfunction could cause the converter to overheat, resulting in possible damage to the converter and vehicle.**

Under normal operating conditions, the catalytic converter will not require maintenance. However, it is important to keep the engine properly tuned to assure proper catalyst operation and prevent possible catalyst damage.

NOTE: Intentional tampering with emissions control systems can result in civil penalties being assessed against you.

In unusual situations involving grossly malfunctioning engine operation, a scorching odor may suggest severe and abnormal catalyst overheating. If this occurs, stop the vehicle, turn off the engine and allow it to cool. Service, including a tune-up to manufacturer's specifications, should be obtained immediately.

To minimize the possibility of catalytic converter damage:

- Do not shut off the engine or interrupt the ignition, when the transmission is in gear and the vehicle is in motion.
- Do not try to start the engine by pushing or towing the vehicle.
- Do not idle the engine with any spark plug wires disconnected or removed, such as when diagnostic testing, or for prolonged periods during very rough idle or malfunctioning operating conditions.

Cooling System

WARNING!

You or others can be badly burned by hot engine coolant (antifreeze) or steam from your radiator. If you see or hear steam coming from under the hood, do not open the hood until the radiator has had time to cool. Never try to open a cooling system pressure cap when the radiator is hot.

Engine Coolant Checks

Check the engine coolant (antifreeze) protection every 12 months (before the onset of freezing weather, where applicable). If the engine coolant (antifreeze) is dirty or rusty in appearance, the system should be drained, flushed and refilled with fresh coolant. Check the front of the A/C condenser (if equipped) or radiator for any accumulation of bugs, leaves, etc. If dirty, clean by gently spraying water from a garden hose vertically down the face of the A/C condenser (if equipped) or the back of the radiator core.

Check the engine cooling system hoses for brittle rubber, cracking , tears, cuts and tightness of the connection at the coolant recovery bottle and radiator. Inspect the entire system for leaks.

With the engine at normal operating temperature (but not running), check the cooling system pressure cap for proper vacuum sealing by draining a small amount of engine coolant (antifreeze) from the radiator drain cock. The radiator drain cock is located in the lower radiator tank. If the cap is sealing properly, the engine coolant (antifreeze) will begin to drain from the coolant expansion bottle. DO NOT REMOVE THE COOLANT PRESSURE CAP WHEN THE COOLING SYSTEM IS HOT.

Cooling System – Drain, Flush, And Refill

If the engine coolant (antifreeze) is dirty or contains a considerable amount of sediment, clean and flush with a reliable cooling system cleaner. Follow with a thorough rinsing to remove all deposits and chemicals. Properly dispose of old engine coolant (antifreeze).

Refer to the "Maintenance Schedule" for the proper maintenance intervals.

Selection Of Coolant

Refer to "Fluids, Lubricants, and Genuine Parts" in "Maintaining Your Vehicle" for further information.

CAUTION!

- **Mixing of engine coolant (antifreeze) other than specified Organic Additive Technology (OAT) engine coolant (antifreeze), may result in engine damage and may decrease corrosion protection. Organic Additive Technology (OAT) engine coolant is different and should not be mixed with Hybrid Organic Additive Technology (HOAT) engine coolant (antifreeze) or any "globally compatible" coolant (antifreeze). If a non-OAT engine coolant (antifreeze) is introduced into the cooling system in an emergency, the cooling system will need to be drained, flushed, and refilled with fresh OAT coolant (conforming to MS-12106), by an authorized dealer as soon as possible.**

(Continued)

CAUTION! ***(Continued)***

- **Do not use water alone or alcohol-based engine coolant (antifreeze) products. Do not use additional rust inhibitors or antirust products, as they may not be compatible with the radiator engine coolant and may plug the radiator.**
- **This vehicle has not been designed for use with propylene glycol-based engine coolant (antifreeze). Use of propylene glycol-based engine coolant (antifreeze) is not recommended.**

Adding Coolant

Your vehicle has been built with an improved engine coolant (OAT coolant conforming to MS-12106) that allows extended maintenance intervals. This engine coolant (antifreeze) can be used up to ten years or 150,000 miles (240,000 km) before replacement. To prevent reducing this extended maintenance period, it is important that you use the same engine coolant (OAT coolant conforming to MS-12106) throughout the life of your vehicle.

Please review these recommendations for using Organic Additive Technology (OAT) engine coolant (antifreeze) that meets the requirements of Chrysler Material Standard MS-12106. When adding engine coolant (antifreeze):

- We recommend using MOPAR® Antifreeze/Coolant 10 Year/150,000 Mile Formula OAT (Organic Additive Technology) that meets the requirements of Chrysler Material Standard MS-12106.
- Mix a minimum solution of 50% OAT engine coolant that meets the requirements of Chrysler Material Standard MS-12106 and distilled water. Use higher concentrations (not to exceed 70%) if temperatures below –34° F (–37° C) are anticipated.
- Use only high purity water such as distilled or deionized water when mixing the water/engine coolant

(antifreeze) solution. The use of lower quality water will reduce the amount of corrosion protection in the engine cooling system.

Please note that it is the owner's responsibility to maintain the proper level of protection against freezing according to the temperatures occurring in the area where the vehicle is operated.

NOTE: Mixing engine coolant (antifreeze) types is not recommended and can result in cooling system damage. If HOAT and OAT coolant are mixed in an emergency, have a authorized dealer drain, flush, and refill with OAT coolant (conforming to MS-12106) as soon as possible.

Cooling System Pressure Cap

The cap must be fully tightened to prevent loss of engine coolant (antifreeze), and to ensure that the engine coolant (antifreeze) will return to the radiator from the coolant expansion bottle.

The cap should be inspected and cleaned if there is any accumulation of foreign material on the sealing surfaces.

WARNING!

- **The warning words "DO NOT OPEN HOT" on the cooling system pressure cap are a safety precaution. Never add engine coolant (antifreeze) when the engine is overheated. Do not loosen or remove the cap to cool an overheated engine. Heat causes pressure to build up in the cooling system. To prevent scalding or injury, do not remove the pressure cap while the system is hot or under pressure.**
- **Do not use a pressure cap other than the one specified for your vehicle. Personal injury or engine damage may result.**

Disposal Of Used Engine Coolant

Used ethylene glycol-based engine coolant (antifreeze) is a regulated substance requiring proper disposal. Check with your local authorities to determine the disposal rules for your community. To prevent ingestion by animals or children, do not store ethylene glycol-based engine coolant (antifreeze) in open containers or allow it to remain in puddles on the ground. If ingested by a child or pet, seek emergency assistance immediately. Clean up any ground spills immediately.

Checking Coolant Level – 3.6L and 5.7L Engines

With the engine OFF and cold, the level of the engine coolant should be between the MIN and MAX range on the dipstick.

To check the coolant level:

1. Open the coolant reservoir.

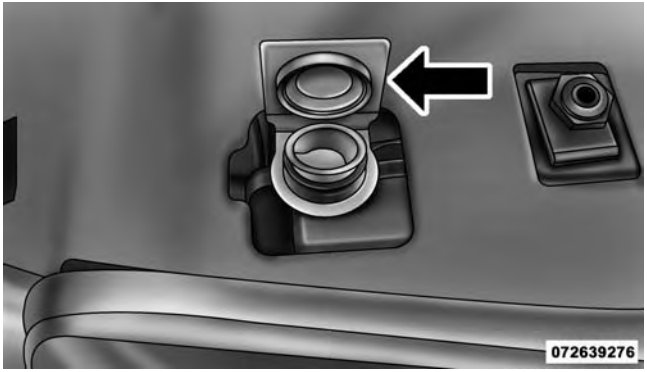

2. Lift and remove the plastic dipstick from the reservoir neck.

3. Check the coolant level on the dipstick.

The radiator normally remains completely full, so there is no need to remove the radiator cap unless checking for engine coolant (antifreeze) freeze point or replacing engine coolant (antifreeze). Advise your service attendant of this. As long as the engine operating temperature is satisfactory, the coolant bottle need only be checked once a month.

When additional engine coolant (antifreeze) is needed to maintain the proper level, it should be added to the coolant bottle. Do not overfill.

Checking Coolant Level – 6.4L Engine

The level of the coolant in the pressurized coolant bottle should be between the “MIN” and “MAX” range on the bottle when the engine is cold.

The radiator normally remains completely full, so there is no need to remove the cap unless checking for coolant freeze point or replacing engine coolant (antifreeze). Advise your service attendant of this. As long as the engine operating temperature is satisfactory, the coolant bottle need only be checked once a month. When additional engine coolant (antifreeze) is needed to maintain the proper level, it should be added to the coolant bottle. Do not overfill.

Points To Remember

NOTE: When the vehicle is stopped after a few miles/kilometers of operation, you may observe vapor coming from the front of the engine compartment. This is normally a result of moisture from rain, snow, or high humidity accumulating on the radiator and being vaporized when the thermostat opens, allowing hot engine coolant (antifreeze) to enter the radiator.

If an examination of your engine compartment shows no evidence of radiator or hose leaks, the vehicle may be safely driven. The vapor will soon dissipate.

- Do not overfill the coolant expansion bottle.
- Check the coolant freeze point in the radiator and in the coolant expansion bottle. If engine coolant (antifreeze) needs to be added, the contents of the coolant expansion bottle must also be protected against freezing.
- If frequent engine coolant (antifreeze) additions are required, the cooling system should be pressure tested for leaks.
- Maintain engine coolant (antifreeze) concentration at a minimum of 50% OAT coolant (conforming to MS-12106) and distilled water for proper corrosion protection of your engine which contains aluminum components.
- Make sure that the coolant expansion bottle overflow hoses are not kinked or obstructed.
- Keep the front of the radiator clean. If your vehicle is equipped with air conditioning, keep the front of the condenser clean.
- Do not change the thermostat for Summer or Winter operation. If replacement is ever necessary, install ONLY the correct type thermostat. Other designs may result in unsatisfactory engine coolant (antifreeze) performance, poor gas mileage, and increased emissions.

Brake System

In order to assure brake system performance, all brake system components should be inspected periodically. Refer to the "Maintenance Schedule" for the proper maintenance intervals.

WARNING!

Riding the brakes can lead to brake failure and possibly a collision. Driving with your foot resting or riding on the brake pedal can result in abnormally high brake temperatures, excessive lining wear, and possible brake damage. You would not have your full braking capacity in an emergency.

Brake Fluid Level Check

The fluid level of the master cylinder should be checked when performing under the hood service or immediately if the brake system warning lamp indicates system failure.

The brake master cylinder has a translucent plastic reservoir. On the outboard side of the reservoir, there is a "MAX" dot and an "MIN" dot. The fluid level must be kept within these two dots. Do not add fluid above the MAX mark because leakage may occur at the cap.

With disc brakes the fluid level can be expected to fall as the brake linings wear. However, an unexpected drop in fluid level may be caused by a leak and a system check should be conducted.

Use only the manufacturer's recommended brake fluid. Refer to "Fluids, Lubricants, and Genuine Parts" in "Maintaining Your Vehicle" for further information.

WARNING!

- **Use only manufacturer's recommended brake fluid. Refer to "Fluids, Lubricants, and Genuine Parts" in "Maintaining Your Vehicle" for further information. Using the wrong type of brake fluid can severely damage your brake system and/or impair its performance. The proper type of brake fluid for your vehicle is also identified on the original factory installed hydraulic master cylinder reservoir.**

(Continued)

WARNING! ***(Continued)***

- **To avoid contamination from foreign matter or moisture, use only new brake fluid or fluid that has been in a tightly closed container. Keep the master cylinder reservoir cap secured at all times. Brake fluid in a open container absorbs moisture from the air resulting in a lower boiling point. This may cause it to boil unexpectedly during hard or prolonged braking, resulting in sudden brake failure. This could result in a collision.**
- **Overfilling the brake fluid reservoir can result in spilling brake fluid on hot engine parts, causing the brake fluid to catch fire. Brake fluid can also damage painted and vinyl surfaces, care should be taken to avoid its contact with these surfaces.**

(Continued)

WARNING! ***(Continued)***

- **Do not allow petroleum based fluid to contaminate the brake fluid. Brake seal components could be damaged, causing partial or complete brake failure. This could result in a collision.**

Rear Axle And 4x4 Front Driving Axle Fluid Level

For normal service, periodic fluid level checks are not required. When the vehicle is serviced for other reasons the exterior surfaces of the axle assembly should be inspected. If gear oil leakage is suspected inspect the fluid level. Refer to "Fluids, Lubricants, and Genuine Parts" in "Maintaining Your Vehicle" for further information. This inspection should be made with the vehicle in a level position.

For 1500 Model axles, the fluid level should be even with the bottom of the fill hole (within 1/4 in (6.4 mm) of edge of hole) for the FDU215 HD front axle and C235FE rear axle.

For all 2500/3500 Model axles, the fluid level should be 1/4 in ± 1/4 in (6.4 mm ± 6.4 mm) below the fill hole on the 9.25 in front and 3/4 in ± 1/4 in (19 mm ± 6.4 mm) on 10.5 in rear axles. The 11.5 in rear axle level should be 1/4 in ± 1/4 in (6.4 mm ± 6.4 mm) below the fill hole.

Drain And Refill

Refer to the "Maintenance Schedule" for the proper maintenance intervals.

Lubricant Selection

Refer to "Fluids, Lubricants, and Genuine Parts" in "Maintaining Your Vehicle" for further information.

NOTE: The presence of water in the gear lubricant will result in corrosion and possible failure of differential components. Operation of the vehicle in water, as may be encountered in some off-highway types of service, will require draining and refilling the axle to avoid damage.

Limited-Slip Differentials

1500 Model rear axles equipped with a Limited Slip Differential require that 5 oz. (148 ml) MOPAR® Limited Slip Additive be added to the gear lubricant. Refer to "Fluids, Lubricants, and Genuine Parts" in "Maintaining Your Vehicle" for further information. The MOPAR® Limited Slip Additive should be added to the gear lubricant whenever a fluid change is made to an axle equipped with a Limited Slip Differential.

2500/3500 Model axles **DO NOT REQUIRE** any limited slip oil additive (friction modifiers).

NOTE: When refilling an axle with a Limited Slip Differential, (which requires a Limited Slip Additive), the Limited Slip Additive should be added before the gear lubricant is added to insure proper additive fill.

Transfer Case

Drain And Refill

Refer to the "Maintenance Schedule" for the proper maintenance intervals.

Lubricant Selection

Refer to "Fluids, Lubricants, and Genuine Parts" in "Maintaining Your Vehicle" for further information.

Fluid Level Check

This fluid level can be checked by removing the filler plug. The fluid level should be to the bottom edge of the filler plug hole with the vehicle in a level position.

Automatic Transmission

Selection Of Lubricant

It is important to use the proper transmission fluid to ensure optimum transmission performance and life. Use only the manufacturer's specified transmission fluid. Refer to "Fluids, Lubricants, and Genuine Parts" in this section for fluid specifications. It is important to maintain the transmission fluid at the correct level using the recommended fluid. No chemical flushes should be used in any transmission; only the approved lubricant should be used.

CAUTION!

Using a transmission fluid other than the manufacturer's recommended fluid may cause deterioration in transmission shift quality and/or torque converter shudder. Refer to "Fluids, Lubricants, and Genuine Parts" in this section for fluid specifications.

Special Additives

The manufacturer strongly recommends against using any special additives in the transmission. Automatic Transmission Fluid (ATF) is an engineered product and its performance may be impaired by supplemental additives. Therefore, do not add any fluid additives to the transmission. The only exception to this policy is the use of special dyes for diagnosing fluid leaks. Avoid using transmission sealers as they may adversely affect seals.

CAUTION!

Do not use chemical flushes in your transmission as the chemicals can damage your transmission components. Such damage is not covered by the New Vehicle Limited Warranty.

Fluid Level Check – Eight-Speed Transmission

The fluid level is preset at the factory and does not require adjustment under normal operating conditions. Routine fluid level checks are not required, therefore the transmission has no dipstick. Your authorized dealer can check your transmission fluid level using special service tools.

If you notice fluid leakage or transmission malfunction, visit your authorized dealer immediately to have the transmission fluid level checked. Operating the vehicle with an improper fluid level can cause severe transmission damage.

CAUTION!

- **If a transmission fluid leak occurs, visit your authorized dealer immediately. Severe transmission damage may occur. Your authorized dealer has the proper tools to adjust the fluid level accurately.**

Fluid Level Check – Six-Speed Transmission

It is best to check the fluid level when the transmission is at normal operating temperature (170-180°F / 77-82°C). This normally occurs after at least 15 miles (25 km) of driving. At normal operating temperature the fluid cannot be held comfortably between the fingertips. You can read the transmission sump temperature in the EVIC display (refer to “Electronic Vehicle Information Center [EVIC]” for further information).

Use the following procedure to check the transmission fluid level properly:

1. Monitor the transmission temperature using the EVIC display, and operate the vehicle as required to reach the normal operating temperature.
2. Park the vehicle on level ground.
3. Run the engine at normal idle speed for at least 60 seconds, and leave the engine running for the rest of this procedure.
4. Fully apply the parking brake and press the brake pedal.
5. Place the shift lever momentarily into each gear position (allowing time for the transmission to fully engage in each position), ending with the transmission in PARK.
6. Remove the dipstick, wipe it clean and reinsert it until seated.
7. Remove the dipstick again and note the fluid level on both sides. The fluid level reading is only valid if there is a solid coating of oil on both sides of the dipstick. Note that the holes in the dipstick will be full of fluid if the actual level is at or above the hole. The fluid level should be between the "HOT" (upper) reference holes on the dipstick at normal operating temperature. If the fluid level is low, add fluid through the dipstick tube to bring it to the proper level. **Do not overfill.** Use ONLY the recommended fluid (see "Fluids, Lubricants, and Genuine Parts" for fluid specifications). After adding any quantity of oil through the dipstick tube, wait a minimum of two minutes for the oil to fully drain into the transmission before rechecking the fluid level.

NOTE: If it is necessary to check the transmission **below** the operating temperature, the fluid level should be between the two "COLD" (lower) holes on the dipstick with the fluid at 60-70°F / 16-21°C. Only use the COLD region of the dipstick as a rough reference when setting the fluid level after a transmission service or fluid change. Re-check the fluid level, and adjust as required, once the transmission reaches normal operating temperature.

CAUTION!

If the fluid temperature is below 50°F (10°C) it may not register on the dipstick. Do not add fluid until the temperature is elevated enough to produce an accurate reading. Run the engine at idle, in PARK, to warm the fluid.

8. Check for leaks. Release the parking brake.

NOTE: To prevent dirt and water from entering the transmission after checking or replenishing fluid, make sure that the dipstick cap is properly reseated. It is normal for the dipstick cap to spring back slightly from its fully seated position, as long as its seal remains engaged in the dipstick tube.

Fluid And Filter Changes – Eight-Speed Transmission

Under normal operating conditions, the fluid installed at the factory will provide satisfactory lubrication for the life of the vehicle.

Routine fluid and filter changes are not required. However change the fluid and filter if the fluid becomes contaminated (with water, etc.), or if the transmission is disassembled for any reason.

Fluid And Filter Changes – Six-Speed Transmission

Refer to the "Maintenance Schedule" for the proper maintenance intervals.

In addition, change the fluid and filter(s) if the fluid becomes contaminated (with water, etc.), or if the transmission is disassembled for any reason.

Appearance Care And Protection From Corrosion

Protection Of Body And Paint From Corrosion

Vehicle body care requirements vary according to geographic locations and usage. Chemicals that make roads passable in snow and ice and those that are sprayed on trees and road surfaces during other seasons are highly corrosive to the metal in your vehicle. Outside parking, which exposes your vehicle to airborne contaminants, road surfaces on which the vehicle is operated, extreme hot or cold weather and other extreme conditions will have an adverse effect on paint, metal trim, and underbody protection.

The following maintenance recommendations will enable you to obtain maximum benefit from the corrosion resistance built into your vehicle.

What Causes Corrosion?

Corrosion is the result of deterioration or removal of paint and protective coatings from your vehicle.

The most common causes are:

- Road salt, dirt and moisture accumulation.
- Stone and gravel impact.
- Insects, tree sap and tar.
- Salt in the air near seacoast localities.
- Atmospheric fallout/industrial pollutants.

Washing

- Wash your vehicle regularly. Always wash your vehicle in the shade using MOPAR® Car Wash, or a mild car wash soap, and rinse the panels completely with clear water.
- If insects, tar, or other similar deposits have accumulated on your vehicle, use MOPAR® Super Kleen Bug and Tar Remover to remove.
- Use a high quality cleaner wax, such as MOPAR® Cleaner Wax to remove road film, stains and to protect your paint finish. Take care never to scratch the paint.
- Avoid using abrasive compounds and power buffing that may diminish the gloss or thin out the paint finish.

CAUTION!

- **Do not use abrasive or strong cleaning materials such as steel wool or scouring powder that will scratch metal and painted surfaces.**
- **Use of power washers exceeding 1,200 psi (8 274 kPa) can result in damage or removal of paint and decals.**

Special Care

- If you drive on salted or dusty roads or if you drive near the ocean, hose off the undercarriage at least once a month.
- It is important that the drain holes in the lower edges of the doors, rocker panels, and trunk be kept clear and open.

- If you detect any stone chips or scratches in the paint, touch them up immediately. The cost of such repairs is considered the responsibility of the owner.
- If your vehicle is damaged due to a collision or similar cause that destroys the paint and protective coating, have your vehicle repaired as soon as possible. The cost of such repairs is considered the responsibility of the owner.
- If you carry special cargo such as chemicals, fertilizers, de-icer salt, etc., be sure that such materials are well packaged and sealed.
- If a lot of driving is done on gravel roads, consider mud or stone shields behind each wheel.
- Use MOPAR® Touch Up Paint on scratches as soon as possible. Your authorized dealer has touch up paint to match the color of your vehicle.

Wheel And Wheel Trim Care

- All wheels and wheel trim, especially aluminum and chrome plated wheels, should be cleaned regularly with a mild soap and water to prevent corrosion.
- To remove heavy soil and/or excessive brake dust, use MOPAR® Wheel Cleaner.

CAUTION!

Do not use scouring pads, steel wool, a bristle brush, or metal polishes. Do not use oven cleaner. These products may damage the wheel's protective finish. Avoid automatic car washes that use acidic solutions or harsh brushes that may damage the wheel's protective finish. Only MOPAR® Wheel Cleaner or equivalent is recommended.

Stain Repel Fabric Cleaning Procedure – If Equipped

Stain Repel seats may be cleaned in the following manner:

- Remove as much of the stain as possible by blotting with a clean, dry towel.
- Blot any remaining stain with a clean, damp towel.
- For tough stains, apply MOPAR® Total Clean, or a mild soap solution to a clean, damp cloth and remove stain. Use a fresh, damp towel to remove soap residue.
- For grease stains, apply MOPAR® Multi-Purpose Cleaner to a clean, damp cloth and remove stain. Use a fresh, damp towel to remove soap residue.
- Do not use any harsh solvents or any other form of protectants on Stain Repel products.

Interior Care

Use MOPAR® Total Clean to clean fabric upholstery and carpeting.

Use MOPAR® Total Clean to clean vinyl upholstery.

MOPAR® Total Clean is specifically recommended for leather upholstery.

Your leather upholstery can be best preserved by regular cleaning with a damp soft cloth. Small particles of dirt can act as an abrasive and damage the leather upholstery and should be removed promptly with a damp cloth. Stubborn soils can be removed easily with a soft cloth and MOPAR® Total Clean. Care should be taken to avoid soaking your leather upholstery with any liquid. Please do not use polishes, oils, cleaning fluids, solvents, detergents, or ammonia-based cleaners to clean your leather upholstery. Application of a leather conditioner is not required to maintain the original condition.

WARNING!

Do not use volatile solvents for cleaning purposes. Many are potentially flammable, and if used in closed areas they may cause respiratory harm.

CAUTION!

Do not use Alcohol and Alcohol-based and/or Keton based cleaning products to clean leather seats, as damage to the seat may result.

Cleaning Headlights

Your vehicle is equipped with plastic headlights and fog lights (if equipped) that are lighter and less susceptible to stone breakage than glass headlights.

Plastic is not as scratch resistant as glass and therefore different lens cleaning procedures must be followed.

To minimize the possibility of scratching the lenses and reducing light output, avoid wiping with a dry cloth. To remove road dirt, wash with a mild soap solution followed by rinsing.

Do not use abrasive cleaning components, solvents, steel wool or other aggressive material to clean the lenses.

Glass Surfaces

All glass surfaces should be cleaned on a regular basis with MOPAR® Glass Cleaner, or any commercial household-type glass cleaner. Never use an abrasive type cleaner. Use caution when cleaning the inside rear window equipped with electric defrosters or the right rear quarter window equipped with the radio antenna. Do not use scrapers or other sharp instrument that may scratch the elements.

When cleaning the rear view mirror, spray cleaner on the towel or rag that you are using. Do not spray cleaner directly on the mirror.

Cleaning Plastic Instrument Cluster Lenses

The lenses in front of the instruments in this vehicle are molded in clear plastic. When cleaning the lenses, care must be taken to avoid scratching the plastic.

1. Clean with a wet soft rag. A mild soap solution may be used, but do not use high alcohol content or abrasive cleaners. If soap is used, wipe clean with a clean damp rag.
2. Dry with a soft cloth.

Seat Belt Maintenance

Do not bleach, dye or clean the belts with chemical solvents or abrasive cleaners. This will weaken the fabric. Sun damage can also weaken the fabric.

If the belts need cleaning, use a mild soap solution or lukewarm water. Do not remove the belts from the car to wash them. Dry with a soft cloth.

Replace the belts if they appear frayed or worn or if the buckles do not work properly.

Tri-Fold Soft Tonneau Cover Care

For cleaning and protecting the vinyl Tri-Fold Tonneau cover, use MOPAR® Whitewall & Vinyl Top Cleaner and MOPAR® Leather and Vinyl Conditioner/Protectant.

Spray-On Bedliner – If Equipped

During ownership, the shine and luster of the Spray-On Bedliner can fade from oxidation, road dirt, heavy-duty hauling and hard water stains. Weathering and UV exposure will lead to fading, dulling, and loss of gloss over time.

To help maintain the appearance of your Spray-On Bedliner, the manufacturer recommends you periodically

rinse all loose dirt from your truck bed and clean your truck at least twice per year using the MOPAR® Spray-On Bedliner Conditioner available at your local authorized dealer.

To Help Maintain The Appearance Of Your Spray-On Bedliner, Follow The Steps Below:

1. Rinse your truck bed out with water to remove any loose dirt and debris.
2. Mix a mild soap or detergent with water with a soft cloth or brush.
3. Rinse bedliner with water.
4. Once dry, apply a small amount of MOPAR® Spray-On Bedliner Conditioner to a moist towel or sponge and wipe over the entire surface of the truck bedliner.

WARNING!

Do not use silicon-based protection products to clean your bedliner. Silicon-based products can become slippery and may result in personal injury.

Spray-On Bedliners are chemically-resistant to many different types of chemicals (including gasoline, oil, hydraulic fluids) for short periods of time. If a spill occurs on your Spray-On Bedliner, rinse the truck out as soon as possible to avoid permanent damage.

Repairing The Spray-On Bedliner

While extremely tough, it is possible to damage a Spray-On Bedliner. One common condition is when loading a heavy pallet and dragging that pallet across the floor of the bed. If a nail or sharp point is exposed under the weight of the pallet a scratch or tear is possible. While not covered by your new vehicle warranty, a cosmetic fix

to cover the metal exposed by the scratch is required. To repair a tear or gouge, follow the directions provided in the MOPAR® Quick Repair Kit.

FUSES

POWER DISTRIBUTION CENTER

The Power Distribution Center is located in the engine compartment near the battery. This center contains cartridge fuses, micro fuses, relays, and circuit breakers. A description of each fuse and component may be stamped on the inside cover, otherwise the cavity number of each fuse is stamped on the inside cover that corresponds to the following chart.

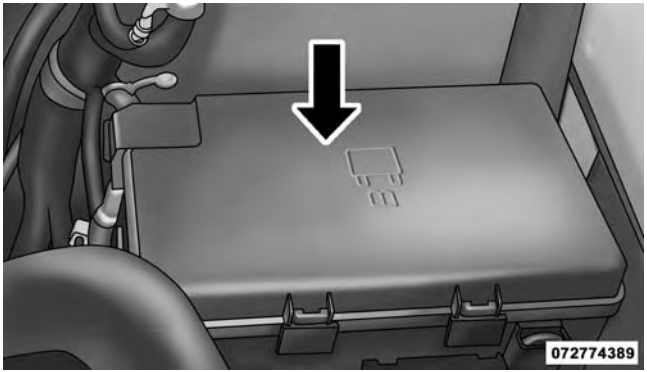

Power Distribution Center Location

Cavity	Cartridge Fuse	Micro Fuse	Description
F01	80 Amp Red		Rad Fan Control Module – If equipped
F03	60 Amp Yellow		Rad Fan – If Equipped
F05	40 Amp Green		Compressor for Air Suspension – If Equipped
F06	40 Amp Green		Antilock Brakes/ Electronic Stability Control Pump
F07	40 Amp Green		Starter Solenoid

Cavity	Cartridge Fuse	Micro Fuse	Description
F08	40 Amp Green (Gas & Cummins Diesel) 20 Amp Yellow (1500 LD Diesel)		Emissions Diesel – If Equipped

Cavity	Cartridge Fuse	Micro Fuse	Description
F09	40 Amp Green (Gas & Cummins Diesel) 30 Amp Pink (1500 LD Diesel)		Diesel Fuel Heater – If Equipped
F10	40 Amp Green		Body Controller / Exterior Lighting #2

Cavity	Cartridge Fuse	Micro Fuse	Description
F10	50 Amp Red		Body Controller / Exterior Lighting #2 – If Equipped with Stop/Start
F11	30 Amp Pink		Integrated Trailer Brake Module – If Equipped
F12	40 Amp Green		Body Controller #3 / Interior Lights
F13	40 Amp Green		Blower Motor
F14	40 Amp Green		Body Controller #4 / Power Locks

Cavity	Cartridge Fuse	Micro Fuse	Description
F15	30 Amp Pink		Electric Park Brake Right Side – If Equipped
F19	30 Amp Pink		SCR – If Equipped
F20	30 Amp Pink		Passenger Door Module
F21	30 Amp Pink		Drive Train Control Module
F22	20 Amp Yellow		Engine Control Module
F23	30 Amp Pink		Body Controller #1

Cavity	Cartridge Fuse	Micro Fuse	Description
F24	30 Amp Pink		Driver Door Module
F25	30 Amp Pink		Front Wiper Low Speed
F25	30 Amp Pink		Front Wiper High Speed
F26	30 Amp Pink		Antilock Brakes/ Stability Control Module/Valves
F28	20 Amp Yellow		Trailer Tow Backup Lights – If Equipped

Cavity	Cartridge Fuse	Micro Fuse	Description
F29	20 Amp Yellow		Trailer Tow Parking Lights – If Equipped
F30	30 Amp Pink		Trailer Tow Receptacle
F32	30 Amp Pink		Drive Train Control Module – If Equipped
F33	20 Amp Yellow		Cummins Diesel Fuel Heater #1 – If Equipped / Rear Blower – If Equipped

Cavity	Cartridge Fuse	Micro Fuse	Description
F34	30 Amp Pink		Vehicle System Interface Module #2 – If Equipped
F35	30 Amp Pink		Sunroof – If Equipped
F36	30 Amp Pink		Rear Defroster– If Equipped
F37	30 Amp Pink		Cummins Diesel Fuel Heater #2 if equipped
F38	30 Amp Pink		Power Inverter 115V AC– If Equipped

Cavity	Cartridge Fuse	Micro Fuse	Description
F39	30 Amp Pink		Vehicle System Interface Module #1– If Equipped
F41		10 Amp Red	Active Grill Shutter
F42		20 Amp Yellow	Horn
F43		10 Amp Red	Snow Plow (Left) – If Equipped
F44		10 Amp Red	Diagnostic Port
F46		10 Amp Red	Tire Pressure Monitor

Cavity	Cartridge Fuse	Micro Fuse	Description
F47		10 Amp Red	Snow Plow (Right) – If Equipped
F49		10 Amp Red	Instrument Panel Cluster
F50		20 Amp Yellow	Air Suspension Control Module – If Equipped
F51		10 Amp Red	Ignition Node Module / Keyless Ignition
F52		5 Amp Tan	Battery Sensor

Cavity	Car-tridge Fuse	Micro Fuse	Description
F53		20 Amp Yellow	Trailer Tow – Left Turn/Stop Lights
F54		20 Amp Yellow	Adjustable Pedals
F55		20 Amp Yellow	E38 Radio – If Equipped
F56		15 Amp Blue	Additional Diesel Content – If Equipped
F57		20 Amp Yellow	Transmission

Cavity	Car-tridge Fuse	Micro Fuse	Description
F58		20 Amp Yellow (Gas Engine) / 25 Amp Natural (Cum-mins Diesel Engine)	Engine Cooling Pump
F60		15 Amp Blue	Underhood Lamp
F61		20 Amp Yellow	Power Take-off Unit – If Equipped

Cavity	Cartridge Fuse	Micro Fuse	Description
F62		10 Amp Red	Air Conditioning Clutch
F63		20 Amp Yellow	IgnitionCoils (Gas), Urea Heater (Cummins Diesel)
F64		25 Amp Natural	Fuel Injectors / Powertrain
F65		10 Amp Red	USB interface
F66		10 Amp Red	Sunroof / Passenger Window Switches / Rain Sensor

Cavity	Cartridge Fuse	Micro Fuse	Description
F67		10 Amp Red	CD / DVD / Bluetooth Hands-free Module – If Equipped
F69		15 Amp Blue	Mod SCR 12V (Cummins Diesel) – If Equipped
F70		30 Amp Green	Fuel Pump Motor
F71		25 Amp Natural	Amplifier
F72		10 Amp Red	Voltage Stabilizer Modules – If Equipped

Cavity	Cartridge Fuse	Micro Fuse	Description
F74		20 Amp Yellow (Gas Engine & 1500 LD Diesel) / 10 Amp Red (Cummins Diesel Engine)	Brake Vacuum Pump Gas/Diesel – If Equipped
F75		10 Amp Red	Coolant Temperature Valve Actuator

Cavity	Cartridge Fuse	Micro Fuse	Description
F76		10 Amp Red	Antilock Brakes/ Electronic Stability Control
F77		10 Amp Red	Drivetrain Control Module/Front Axle Disconnect Module
F78		10 Amp Red	Engine Control Module / Electric Power Steering
F79		15 Amp Blue	Clearance Lights
F80		10 Amp Red	Universal Garage Door Opener / Compass

Cavity	Car-tridge Fuse	Micro Fuse	Description
F81		20 Amp Yellow	Trailer Tow Right Turn/Stop Lights
F82		10 Amp Red	Steering Column Control Module/ Cruise Control
F84		15 Amp Blue	Switch Bank/ Instrument Cluster
F85		10 Amp Red	Airbag Module
F86		10 Amp Red	Airbag Module

Cavity	Car-tridge Fuse	Micro Fuse	Description
F87		10 Amp Red	Air Suspension-If Equipped / Trailer Tow / Steering Column Control Module
F88		15 Amp Blue	Instrument Panel Cluster
F90/F91		20 Amp Yellow	Power Outlet (Rear seats) Customer Selectable
F93		20 Amp Yellow	Cigar Lighter
F94		10 Amp Red	Shifter / Transfer Case Module

Cavity	Cartridge Fuse	Micro Fuse	Description
F95		10 Amp Red	Rear Camera / Park Assist
F96		10 Amp Red	Rear Seat Heater Switch
F97		25 Amp Natural	Rear Heated Seats & Heated Steering Wheel – If Equipped
F98		25 Amp Natural	Front Heated Seats – If Equipped

Cavity	Cartridge Fuse	Micro Fuse	Description
F99		10 Amp Red	Climate Control
F101		15 Amp Blue	Electrochromatic Mirror / Smart High Beams – If Equipped
F104		20 Amp Yellow	Power Outlets (Instrument Panel/ Center Console)

CAUTION!

- **When installing the power distribution center cover, it is important to ensure the cover is properly positioned and fully latched. Failure to do so may allow water to get into the power distribution center and possibly result in an electrical system failure.**
- **When replacing a blown fuse, it is important to use only a fuse having the correct amperage rating. The use of a fuse with a rating other than indicated may result in a dangerous electrical system overload. If a properly rated fuse continues to blow, it indicates a problem in the circuit that must be corrected.**

VEHICLE STORAGE

If you are storing your vehicle for more than 21 days, we recommend that you take the following steps to minimize the drain on your vehicle's battery:

- Disconnect the negative cable from battery.
- Any time you store your vehicle or keep it out of service (i.e., vacation) for two weeks or more, run the air conditioning system at idle for about five minutes in the fresh air and high blower setting. This will ensure adequate system lubrication to minimize the possibility of compressor damage when the system is started again.

REPLACEMENT BULBS

All of the inside bulbs are brass or glass-wedge base. Aluminum base bulbs are not approved.

Interior Bulbs

	Bulb Number
Overhead Console Lamps	TS 212–9
Dome Lamp	7679
For lighted switches, see your authorized dealer for replacement instructions.	

Exterior Bulbs

	Bulb Number
Base Quad Headlamp – Low Beam	H11
Base Quad Headlamp – High Beam	9005
Front Turn Signal Lamp (Base Quad Headlamp)	3157NA
Premium Bi Halogen Projector Headlamp - Low Beam	HIR2
Premium Bi Halogen Projector Headlamp - High Beam	9005
Front Turn Signal Lamp (Premium Headlamp)	LED (Serviced at Authorized Dealer)
Fog Lamp (Horizontal shape)	9145
Fog Lamp (Vertical shape)	9006
Center High Mounted Stop Lamp (CHMSL)	921
Rear Cargo Lamp	921

	Bulb Number
LED Center High Mounted Stop Lamp (CHMSL)/Cargo Lamp	LED (Serviced at Authorized Dealer)
Cab Roof Marker Lamps	194NA
Base Rear Tail/Turn and Stop Lamp	3157K
Premium Rear Tail/Turn and Stop Lamp	LED (Serviced at Authorized Dealer)
Premium Backup Lamp	T20
Rear Lamp Bar ID Marker Lamp	194
Side Marker Lamps (Dual Rear Wheels)	194
Backup Lamp	921
Rear License Plate Lamp	194

BULB REPLACEMENT

NOTE: Lens fogging can occur under certain atmospheric conditions. This will usually clear as atmospheric conditions change to allow the condensation to change back into a vapor. Turning the lamps on will usually accelerate the clearing process.

Base Quad / Premium Bi-Halogen: Low Beam Headlamp, High Beam Headlamp, Front Park And Turn – If Equipped

1. Open the hood.
2. Disconnect and isolate the negative battery cable.
3. Remove the four plastic push-in fasteners that secure the upper radiator seal to the grille support and both fender ledges.
4. Remove the two plastic push-in rivets that secure the upper radiator seal to the radiator.

5. Remove the upper radiator seal from the vehicle.
6. Remove the two headlamp assembly attachment screws.

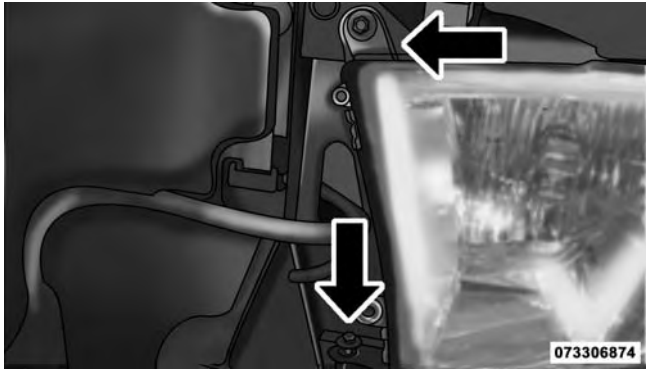

7. Reach into the front wheel house ahead of the front wheel, remove the fastener, and lift the cover over the access hole in the front of the wheel house splash shield. Access to the rear of the lamp can be gained through this access hole.
8. Reach through the access hole of the wheel house splash shield and lift the slide lock upward far enough to disengage it from the lock post on the back of the front lamp unit housing.

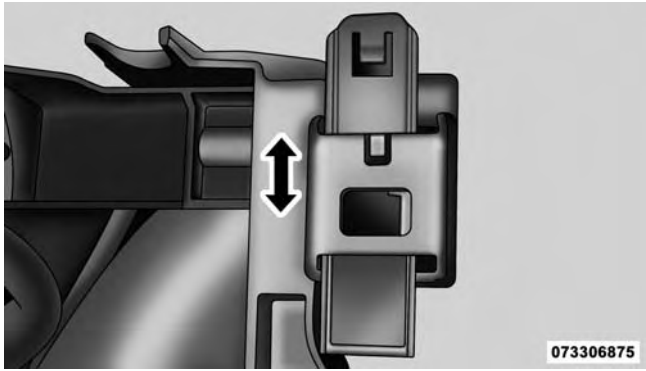

9. Remove the headlamp assembly. Grasp the outboard edge of the lamp and pull it straight forward to disengage the ball stud from the plastic grommet.
10. Disconnect the wiring harness connectors from the bulb socket.
11. Replace bulb(s) as necessary.

CAUTION!

- **Do not contaminate the bulb glass by touching it with your fingers or by allowing it to contact other oily surfaces. Shortened bulb life will result.**
- **Always use the correct bulb size and type for replacement. An incorrect bulb size or type may overheat and cause damage to the lamp, the bulb socket, or the lamp wiring.**

NOTE: There are access covers over both headlamp bulb access holes in the quad front lamp unit housing (if equipped). These covers MUST be reinstalled after the bulb has been replaced.

Fog Lamps – If Equipped

1. Reach under and behind the front bumper to access the back of the front fog lamp housing.
2. Disconnect the fog lamp wiring harness connector from the fog lamp bulb.
3. Rotate the bulb counterclockwise ¼ turn to unlock the bulb from the housing.
4. Pull the bulb straight out from the housing.

CAUTION!

Do not contaminate the bulb glass by touching it with your fingers or by allowing it to contact other oily surfaces. Shortened bulb life will result.

Rear Tail/Stop, Turn Signal And Backup Lamps

1. Remove the two screws that pass through the bed sheetmetal.

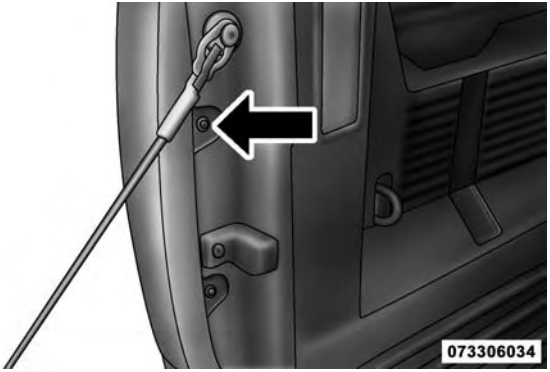

2. Pull the outboard side of the lamp rearward far enough to unsnap the two receptacles on the outboard side of the lamp housing from the two plastic snap post retainers in the outer box side panel.

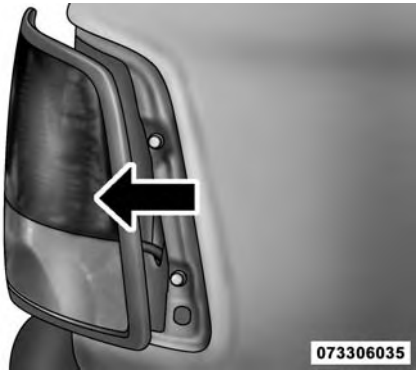

3. Disconnect the wiring harness connectors from the bulb socket.
4. Rotate the bulb socket counterclockwise 1/4 turn to unlock it from the housing.
5. Pull the bulb straight out of the socket.

CAUTION!

Do not contaminate the bulb glass by touching it with your fingers or by allowing it to contact other oily surfaces. Shortened bulb life will result.

6. Reverse the procedure to install the bulb and housing.

Center High-Mounted Stoplamp (CHMSL) With Cargo Lamp

1. Remove the two screws holding the housing/lens to the body as shown.

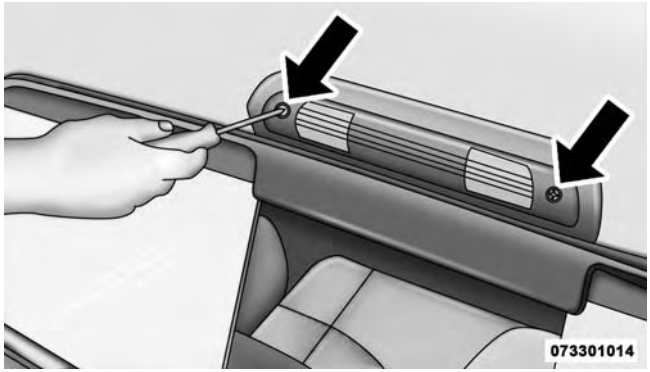

2. Separate the connector holding the housing and wiring harness to the body.

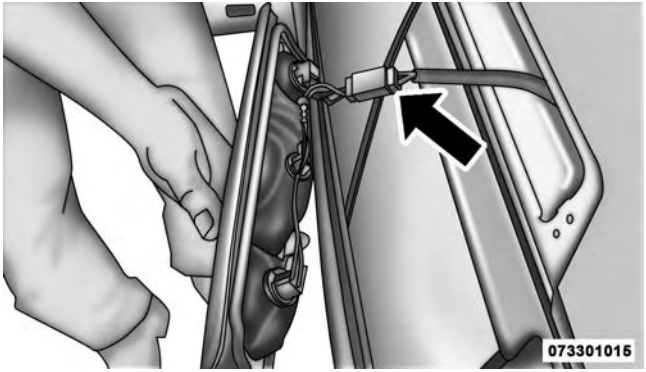

3. Turn the desired bulb socket ¼ turn and remove the socket and bulb from housing.
4. Pull the desired bulb straight from the socket.

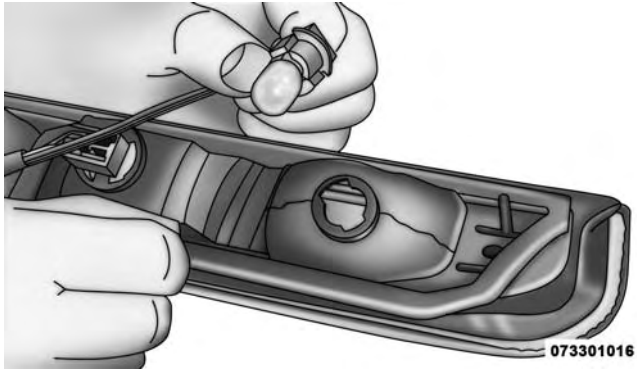

CAUTION!

Do not contaminate the bulb glass by touching it with your fingers or by allowing it to contact other oily surfaces. Shortened bulb life will result.

- Outside Bulbs: Cargo Lamps
- Inside Bulb: Center High-Mounted Stop Lamp

5. Reverse the procedure for installation of bulbs and housing.

Cab Top Clearance Lamps – If Equipped

1. Remove the two screws from the top of the lamp.

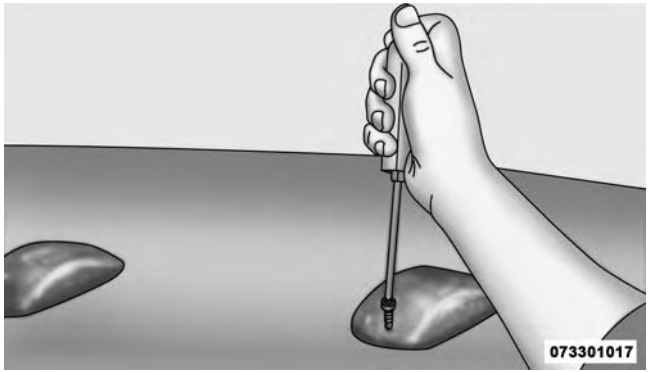

2. Rotate the socket ¼ turn and pull it from the lamp assembly.

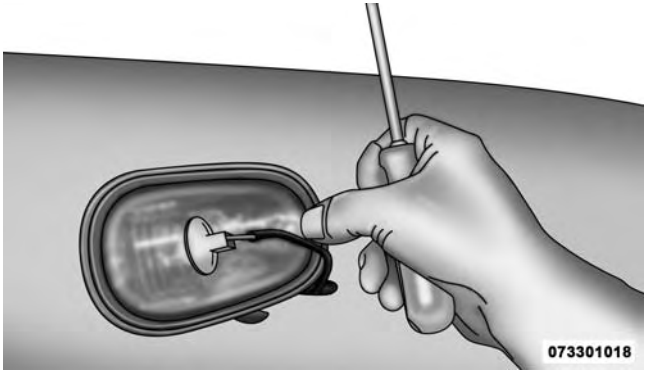

3. Pull the bulb straight from it's socket and replace.

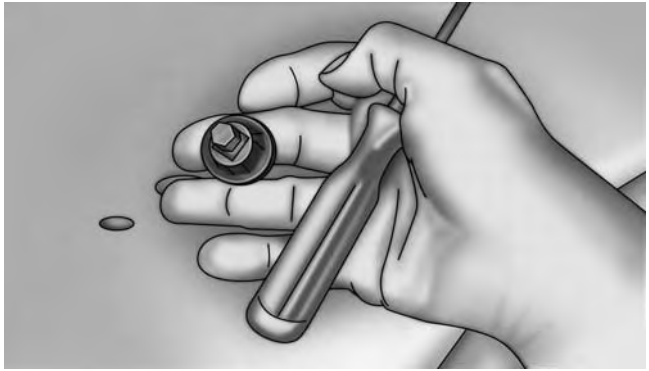

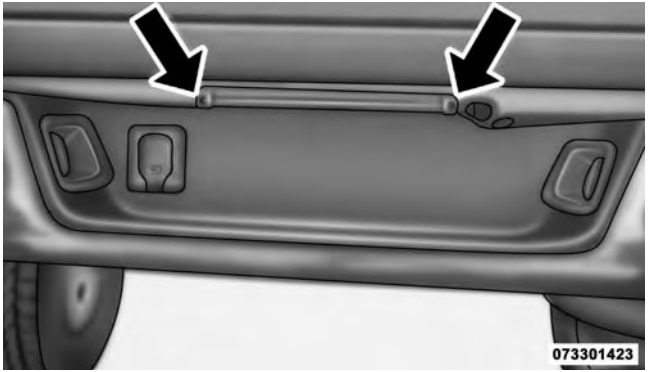

Rear Lamp Bar ID Marker (Dual Rear Wheels) — If Equipped

1. Loosen the two screws and the housing to gain access to the bulb sockets.
2. Turn the socket ¼ turn counterclockwise to access the bulb.
3. Pull the bulb straight out from the socket.
4. Reverse the procedure for installation of the bulbs and housing.

Side Marker Lamps (Dual Rear Wheels) — If Equipped

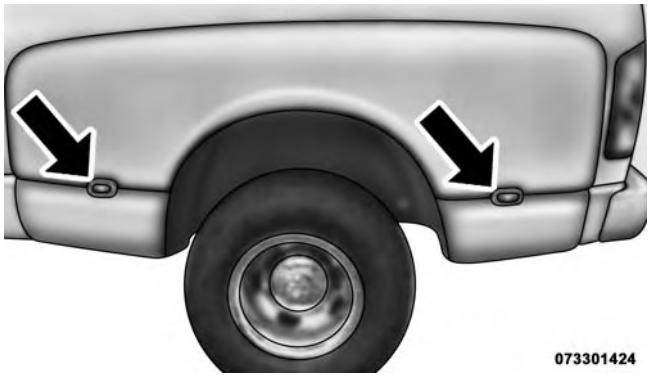

1. Push rearward on the side marker lamp assembly.
2. Pull the entire assembly from the fender.
3. Turn the socket ¼ turn counterclockwise and remove from assembly to access the bulb.
4. Pull the bulb straight out from socket.
5. Reverse the procedure for installation of the bulbs and housing.

FLUID CAPACITIES

	U.S.	Metric
Fuel (Approximate)		
1500 Regular Cab Shortbed/Crew Quad Cab Models	26 Gallons	98 Liters
1500 Regular Cab Longbed/Crew Quad Cab Models (Optional)	32 Gallons	121 Liters
2500/3500 Shortbed Models	34 Gallons	129 Liters
2500/3500 Longbed Models	35 Gallons	132 Liters
Engine Oil With Filter		
3.6L Engine (We recommend you use SAE 5W-20, API Certified)	6 Quarts	5.6 Liters
5.7L Engines (We recommend you use SAE 5W-20, API Certified)	7 Quarts	6.6 Liters
5.7L Engine (We recommend you use SAE 5W-30, API Certified), for 2500/3500 trucks operating under a gross combined weight rating greater than 14,000 lbs (6 350 kg).	7 Quarts	6.6 Liters
6.4L Engines (We recommend you use SAE 0W-40 engine oil meeting the requirements of Chrysler Material Standard MS-12633 for use in all operating temperatures.)	7 Quarts	6.6 Liters

	U.S.	Metric
Cooling System		
3.6L Engine (We recommend you use MOPAR® Antifreeze/Coolant 10 Year/150,000 Mile Formula that meets the requirements of Chrysler Material Standard MS-12106.)	14 Quarts	13 Liters
5.7L Engine – 1500 Models (We recommend you use MOPAR® Antifreeze/Coolant 10 Year/150,000 Mile Formula that meets the requirements of Chrysler Material Standard MS-12106.)	16 Quarts	15 Liters
5.7L Engine – 2500/3500 Models (We recommend you use MOPAR® Antifreeze/Coolant 10 Year/150,000 Mile Formula that meets the requirements of Chrysler Material Standard MS-12106.)	18.7 Quarts	17.7 Liters
5.7L Engine – 2500/3500 Models w/Heavy Duty (We recommend you use MOPAR® Antifreeze/Coolant 10 Year/150,000 Mile Formula that meets the requirements of Chrysler Material Standard MS-12106.)	19.2 Quarts	18.2 Liters
6.4 Liter Engine (MOPAR® Antifreeze/Engine Coolant 10 Year/150,000 Mile Formula that meets the requirements of Chrysler Material Standard MS-12106.	18.7 Quarts	17.7 Liters

FLUIDS, LUBRICANTS AND GENUINE PARTS

Engine

Component	Fluid, Lubricant, or Genuine Part
Engine Coolant	We recommend you use MOPAR® Antifreeze/Coolant 10 Year/150,000 Mile Formula OAT (Organic Additive Technology).
Engine Oil – 5.7	We recommend you use API Certified SAE 5W-20 Engine Oil, meeting the requirements of Chrysler Material Standard MS-6395 such as MOPAR, Pennzoil®, and Shell Helix®. Refer to your engine oil filler cap for correct SAE grade.
Engine Oil – 5.7L Engine For 2500/3500 trucks operating under a gross combined weight rating **greater** than 14,000 lbs/(6,350 kg.)	We recommend you use API Certified SAE 5W-30 Engine Oil, meeting the requirements of Chrysler Material Standard MS-6395 such as MOPAR, Pennzoil®, and Shell Helix®. Refer to your engine oil filler cap for correct SAE grade.

Component	Fluid, Lubricant, or Genuine Part
Engine Oil – 6.4L	For best performance and maximum protection under all types of operating conditions, the manufacturer only recommends full synthetic engine oils that meet the American Petroleum Institute (API) categories of SN. The manufacturer recommends the use of Pennzoil UltraTM 0W-40 or equivalent MOPAR engine oil meeting the requirements of Chrysler Material Standard MS-12633 for use in all operating temperatures.
Engine Oil Filter	We recommend you use MOPAR® brand Engine Oil Filters.
Spark Plugs – 3.6L Engine	We recommend you use MOPAR® Spark Plugs (Gap 0.043 in [1.1 mm])
Spark Plugs – 5.7L Engine	We recommend you use MOPAR® Spark Plugs (Gap 0.043 in [1.1 mm])
Spark Plugs – 6.4L Engine	We recommend you use MOPAR® Spark Plugs (Gap 0.043 in [1.1 mm])

Component	Fluid, Lubricant, or Genuine Part
Fuel Selection – 3.6L Engine	87 Octane
Fuel Selection – 5.7L Engines	87 Octane Acceptable - 89 Octane Recommended
Fuel Selection – 6.4L Engines	87 Octane

Chassis

Component	Fluid, Lubricant, or Genuine Part
Automatic Transmission — Eight-Speed Automatic	We recommend you use only MOPAR® ZF 8&9 Speed ATF™ Automatic Transmission Fluid or equivalent. Failure to use the correct fluid may affect the function or performance of your transmission.
Automatic Transmission — Six-Speed Automatic with Gasoline Engine (For Diesel Engine see Diesel Supplement)	We recommend you use only ATF+4® Automatic Transmission Fluid. Failure to use ATF+4® fluid may affect the function or performance of your transmission. We recommend MOPAR® ATF+4® fluid.
Transfer Case	We recommend you use MOPAR® BW44–44 Transfer Case Fluid.

Component	Fluid, Lubricant, or Genuine Part
Front Axle – 1500 Four-Wheel Drive Models	We recommend you use MOPAR® GL-5 Synthetic Axle Lubricant SAE 75W-85.
Rear Axle – 1500 Models	We recommend you use MOPAR® Synthetic Gear Lubricant SAE 75W-140 (MS-8985). Limited-Slip Rear Axles require the addition of 5 oz. (148 ml) MOPAR® Limited Slip Additive (MS-10111).
Front and Rear Axle – 2500/3500 Models	We recommend you use Synthetic, GL-5 SAE, 75W-90. Limited-Slip 10.5/11.5 inch Rear Axles **Limited slip additive is not required.**
Brake Master Cylinder	We recommend you use MOPAR® DOT 3. If DOT 3 brake fluid is not available, then DOT 4 is acceptable.
Power Steering Reservoir– 2500/3500 Models	We recommend you use MOPAR® Power Steering Fluid +4 or MOPAR® ATF+4® Automatic Transmission Fluid.

MAINTENANCE SCHEDULES

CONTENTS

■ MAINTENANCE SCHEDULE 740

□ Maintenance Chart 743

MAINTENANCE SCHEDULE

Your vehicle is equipped with an automatic oil change indicator system. The oil change indicator system will remind you that it is time to take your vehicle in for scheduled maintenance.

Based on engine operation conditions, the oil change indicator message will illuminate. This means that service is required for your vehicle. Operating conditions such as frequent short-trips, trailer tow, extremely hot or cold ambient temperatures, and E85 fuel usage will influence when the “Oil Change Required” message is displayed. Severe Operating Conditions can cause the change oil message to illuminate as early as 3,500 miles (5,600 km) since last reset. Have your vehicle serviced as soon as possible, within the next 500 miles (805 km).

Your authorized dealer will reset the oil change indicator message after completing the scheduled oil change. If a scheduled oil change is performed by someone other than your authorized dealer, the message can be reset by referring to the steps described under “Electronic Vehicle Information Center (EVIC)/Oil Change Required” in “Understanding Your Instrument Panel” for further information.

NOTE:

1500 Models Only

- Under no circumstances should oil change intervals exceed 10,000 miles (16,000 km) or twelve months on 1500 trucks, whichever comes first.

2500 – 3500 Models

- Under no circumstances should oil change intervals exceed 8,000 miles (13,000 km) or twelve months on 2500 – 3500 trucks, whichever comes first.

Severe Duty All Models

- Change Engine Oil at 4000 miles (6,500 km) if the vehicle is operated in a dusty and off road environment. This type of vehicle use is considered Severe Duty

Once A Month Or Before A Long Trip:

- Check engine oil level
- Check windshield washer fluid level
- Check the tire inflation pressures and look for unusual wear or damage
- Check the fluid levels of the coolant reservoir, brake master cylinder, power steering (2500/3500 Models Only) and automatic transmission (six-speed only) as needed
- Check function of all interior and exterior lights

Required Maintenance

Refer to the Maintenance Schedules on the following pages for required maintenance.

At Every Oil Change Interval As Indicated By Oil Change Indicator System:
• Change oil and filter.
• Rotate the tires. **Rotate at the first sign of irregular wear, even if it occurs before the oil indicator system turns on.**
• Inspect battery and clean and tighten terminals as required.
• Inspect automatic transmission fluid if equipped with dipstick.

At Every Oil Change Interval As Indicated By Oil Change Indicator System:
• Inspect brake pads, shoes, rotors, drums, hoses and park brake.
• Inspect engine cooling system protection and hoses.
• Inspect exhaust system.
• Inspect engine air cleaner if using in dusty or off-road conditions.
• Lube the front drive shaft fitting (2500/3500 (4x4) models only).

Maintenance Chart

Mileage or time passed (whichever comes first)	20,000	30,000	40,000	50,000	60,000	70,000	80,000	90,000	100,000	110,000	120,000	130,000	140,000	150,000
Or Years:	**2**	**3**	**4**	**5**	**6**	**7**	**8**	**9**	**10**	**11**	**12**	**13**	**14**	**15**
Or Kilometers:	**32,000**	**48,000**	**64,000**	**80,000**	**96,000**	**112,000**	**128,000**	**144,000**	**160,000**	**176,000**	**192,000**	**208,000**	**224,000**	**240,000**
Additional Inspections														
Inspect the CV/Universal joints.		X			X			X			X			X
Inspect front suspension, tie rod ends, and replace if necessary.	X		X		X		X		X		X		X	
Inspect the front and rear axle surfaces. If gear oil leakage is suspected, check the fluid level. If using your vehicle for police, taxi, fleet, off-road or frequent trailer towing, change axle fluid.	X		X		X		X		X		X		X	

Mileage or time passed (whichever comes first)	20,000	30,000	40,000	50,000	60,000	70,000	80,000	90,000	100,000	110,000	120,000	130,000	140,000	150,000
Or Years:	**2**	**3**	**4**	**5**	**6**	**7**	**8**	**9**	**10**	**11**	**12**	**13**	**14**	**15**
Or Kilometers:	**32,000**	**48,000**	**64,000**	**80,000**	**96,000**	**112,000**	**128,000**	**144,000**	**160,000**	**176,000**	**192,000**	**208,000**	**224,000**	**240,000**
Inspect the brake linings, replace as necessary.	X		X		X		X		X		X		X	
Adjust parking brake as necessary.	X		X		X		X		X		X		X	
Inspect transfer case fluid.		X						X						X
Additional Maintenance														
Replace engine air filter.		X			X			X			X			X
Replace spark plugs (3.6L engine).**									X					
Replace spark plugs (5.7L engine).**									X					

Mileage or time passed (whichever comes first)	20,000	30,000	40,000	50,000	60,000	70,000	80,000	90,000	100,000	110,000	120,000	130,000	140,000	150,000
Or Years:	2	3	4	5	6	7	8	9	10	11	12	13	14	15
Or Kilometers:	32,000	48,000	64,000	80,000	96,000	112,000	128,000	144,000	160,000	176,000	192,000	208,000	224,000	240,000
Replace spark plugs (6.4L engine).**									X					
Flush and replace the engine coolant at 10 years or 150,000 miles (240,000 km) whichever comes first.									X					X
Change automatic transmission fluid and filter(s) (six-speed automatic only), if using your vehicle for police, taxi, fleet, or frequent trailer towing.					X									

Mileage or time passed (whichever comes first)	20,000	30,000	40,000	50,000	60,000	70,000	80,000	90,000	100,000	110,000	120,000	130,000	140,000	150,000
Or Years:	2	3	4	5	6	7	8	9	10	11	12	13	14	15
Or Kilometers:	32,000	48,000	64,000	80,000	96,000	112,000	128,000	144,000	160,000	176,000	192,000	208,000	224,000	240,000
Change automatic transmission fluid and filter (six-speed automatic only).											X			
Inspect the transfer case fluid, change for any of the following: police, taxi, fleet, or frequent trailer towing.					X									
Change the transfer case fluid.											X			
Inspect and replace PCV valve if necessary.									X					

** The spark plug change interval is mileage based only, yearly intervals do not apply.

WARNING!

- **You can be badly injured working on or around a motor vehicle. Do only service work for which you have the knowledge and the right equipment. If you have any doubt about your ability to perform a service job, take your vehicle to a competent mechanic.**
- **Failure to properly inspect and maintain your vehicle could result in a component malfunction and effect vehicle handling and performance. This could cause an accident.**

IF YOU NEED CONSUMER ASSISTANCE

CONTENTS

■ SUGGESTIONS FOR OBTAINING SERVICE FOR YOUR VEHICLE 751

□ Prepare For The Appointment. 751

□ Prepare A List 751

□ Be Reasonable With Requests 751

■ IF YOU NEED ASSISTANCE 752

□ Chrysler Group LLC Customer Center. 753

□ Chrysler Canada Inc. Customer Center 753

□ In Mexico contact: 753

□ Customer Assistance For The Hearing Or Speech Impaired (TDD/TTY) 753

□ Service Contract 753

■ WARRANTY INFORMATION 755

■ MOPAR® PARTS 755

■ REPORTING SAFETY DEFECTS 755

□ In The 50 United States And Washington, D.C.. 755

□ In Canada. 755

■ PUBLICATION ORDER FORMS 756

■ DEPARTMENT OF TRANSPORTATION UNIFORM TIRE QUALITY GRADES 757

□ Treadwear. 757

□ Traction Grades. 758

□ Temperature Grades. 758

SUGGESTIONS FOR OBTAINING SERVICE FOR YOUR VEHICLE

Prepare For The Appointment

If you are having warranty work done, be sure to have the right papers with you. Take your warranty folder. All work to be performed may not be covered by the warranty. Discuss additional charges with the service manager. Keep a maintenance log of your vehicle's service history. This can often provide a clue to the current problem.

Prepare A List

Make a written list of your vehicle's problems or the specific work you want done. If you've had an accident or work done that is not on your maintenance log, let the service advisor know.

Be Reasonable With Requests

If you list a number of items and you must have your vehicle by the end of the day, discuss the situation with the service advisor and list the items in order of priority. At many authorized dealer, you may obtain a rental vehicle at a minimal daily charge. If you need a rental, it is advisable to make these arrangements when you call for an appointment.

IF YOU NEED ASSISTANCE

The manufacturer and its authorized dealer are vitally interested in your satisfaction. We want you to be happy with our products and services.

Warranty service must be done by an authorized dealer. We strongly recommend that you take the vehicle to an authorized dealer. They know your vehicle the best, and are most concerned that you get prompt and high quality service. The manufacturer's authorized dealer have the facilities, factory-trained technicians, special tools, and the latest information to ensure the vehicle is fixed correctly and in a timely manner.

This is why you should always talk to an authorized dealer service manager first. Most matters can be resolved with this process.

- If for some reason you are still not satisfied, talk to the general manager or owner of the authorized dealer. They want to know if you need assistance.
- If an authorized dealer is unable to resolve the concern, you may contact the manufacturer's customer center.

Any communication to the manufacturer's customer center should include the following information:

- Owner's name and address
- Owner's telephone number (home and office)
- Authorized dealer name
- Vehicle Identification Number (VIN)
- Vehicle delivery date and mileage

Chrysler Group LLC Customer Center

P.O. Box 21–8004

Auburn Hills, MI 48321–8004

Phone: (866) 726–4636

Chrysler Canada Inc. Customer Center

P.O. Box 1621

Windsor, Ontario N9A 4H6

Phone: (800) 465–2001 English / (800) 387–9983 French

In Mexico contact:

Av. Prolongacion Paseo de la Reforma, 1240

Sante Fe C.P. 05109

Mexico, D. F.

In Mexico City: 5081-7568

Outside Mexico City: 1-800-505-1300

Customer Assistance For The Hearing Or Speech Impaired (TDD/TTY)

To assist customers who have hearing difficulties, the manufacturer has installed special TDD (Telecommunication Devices for the Deaf) equipment at its customer center. Any hearing or speech impaired customer, who has access to a TDD or a conventional teletypewriter (TTY) in the United States, can communicate with the manufacturer by dialing 1–800–380–CHRY.

Canadian residents with hearing difficulties that require assistance can use the special needs relay service offered by Bell Canada. For TTY teletypewriter users, dial 711 and for Voice callers, dial 1 800 855-0511 to connect with a Bell Relay Service operator.

Service Contract

You may have purchased a service contract for a vehicle to help protect you from the high cost of unexpected repairs after the manufacturer's New Vehicle Limited

Warranty expires. The manufacturer stands behind only the manufacturer's service contracts. If you purchased a manufacturer's service contract, you will receive Plan Provisions and an Owner Identification Card in the mail within three weeks of the vehicle delivery date. If you have any questions about the service contract, call the manufacturer's Service Contract National Customer Hotline at 1-800-521-9922 (Canadian residents, call (800) 465–2001 English / (800) 387–9983 French).

The manufacturer will not stand behind any service contract that is not the manufacturer's service contract. It is not responsible for any service contract other than the manufacturer's service contract. If you purchased a service contract that is not a manufacturer's service contract, and you require service after the manufacturer's New Vehicle Limited Warranty expires, please refer to the contract documents, and contact the person listed in those documents.

We appreciate that you have made a major investment when you purchased the vehicle. An authorized dealer has also made a major investment in facilities, tools, and training to assure that you are absolutely delighted with the ownership experience. You will be pleased with their sincere efforts to resolve any warranty issues or related concerns.

WARNING!

Engine exhaust, some of its constituents, and certain vehicle components contain, or emit, chemicals known to the State of California to cause cancer and birth defects, or other reproductive harm. In addition, certain fluids contained in vehicles and certain products of component wear contain, or emit, chemicals known to the State of California to cause cancer and birth defects, or other reproductive harm.

WARRANTY INFORMATION

See the Warranty Information Booklet, located on the DVD, for the terms and provisions of Chrysler Group LLC warranties applicable to this vehicle and market.

MOPAR® PARTS

MOPAR® fluids, lubricants, parts, and accessories are available from an authorized dealer. They are recommended for your vehicle in order to help keep the vehicle operating at its best.

REPORTING SAFETY DEFECTS

In The 50 United States And Washington, D.C.

If you believe that your vehicle has a defect that could cause a crash or cause injury or death, you should immediately inform the National Highway Traffic Safety Administration (NHTSA) in addition to notifying the manufacturer.

If NHTSA receives similar complaints, it may open an investigation, and if it finds that a safety defect exists in a group of vehicles, it may order a recall and remedy campaign. However, NHTSA cannot become involved in individual problems between you, your authorized dealer, and the manufacturer.

To contact NHTSA, you may either call the Auto Safety Hotline toll free at 1–888–327–4236 (TTY: 1–800–424–9153), or go to http://www.safercar.gov; or write to: Administrator, NHTSA, 1200 New Jersey Avenue, SE., West Building, Washington, D.C. 20590. You can also obtain other information about motor vehicle safety from http://www.safercar.gov.

In Canada

If you believe that your vehicle has a safety defect, you should contact the Customer Service Department immediately. Canadian customers who wish to report a safety

defect to the Canadian government should contact Transport Canada, Motor Vehicle Defect Investigations and Recalls at 1-800-333-0510 or go to http://www.tc.gc.ca/roadsafety/

PUBLICATION ORDER FORMS

To order the following manuals, you may use either the website or the phone numbers listed below. Visa, Mastercard, American Express, and Discover orders are accepted. If you prefer mailing your payment, please call for an order form.

NOTE: A street address is required when ordering manuals (no P.O. Boxes).

Service Manuals

These comprehensive Service Manuals provide the information that students and professional technicians need in diagnosing/troubleshooting, problem solving, maintaining, servicing, and repairing Chrysler Group LLC vehicles. A complete working knowledge of the vehicle, system, and/or components is written in straightforward language with illustrations, diagrams, and charts.

Diagnostic Procedure Manuals

Diagnostic Procedure Manuals are filled with diagrams, charts and detailed illustrations. These practical manuals make it easy for students and technicians to find and fix problems on computer-controlled vehicle systems and features. They show exactly how to find and correct problems the first time, using step-by-step troubleshooting and drivability procedures, proven diagnostic tests and a complete list of all tools and equipment.

Owner's Manuals

These Owner's Manuals have been prepared with the assistance of service and engineering specialists to acquaint you with specific Chrysler Group LLC vehicles. Included are starting, operating, emergency and maintenance procedures as well as specifications, capabilities and safety tips.

Call toll free at:

- **1–800–890–4038 (U.S.)**
- **1–800–387–1143 (Canada)**

Or

Visit us on the Worldwide Web at:

- **www.techauthority.com**

DEPARTMENT OF TRANSPORTATION UNIFORM TIRE QUALITY GRADES

The following tire grading categories were established by the National Highway Traffic Safety Administration. The specific grade rating assigned by the tire's manufacturer in each category is shown on the sidewall of the tires on your vehicle.

All passenger car tires must conform to Federal safety requirements in addition to these grades.

Treadwear

The Treadwear grade is a comparative rating, based on the wear rate of the tire when tested under controlled conditions on a specified government test course. For example, a tire graded 150 would wear one and one-half times as well on the government course as a tire graded 100. The relative performance of tires depends upon the actual conditions of their use, however, and may depart

significantly from the norm due to variations in driving habits, service practices, and differences in road characteristics and climate.

Traction Grades

The Traction grades, from highest to lowest, are AA, A, B, and C. These grades represent the tire's ability to stop on wet pavement, as measured under controlled conditions on specified government test surfaces of asphalt and concrete. A tire marked C may have poor traction performance.

WARNING!

The traction grade assigned to this tire is based on straight-ahead braking traction tests, and does not include acceleration, cornering, hydroplaning, or peak traction characteristics.

Temperature Grades

The temperature grades are A (the highest), B, and C, representing the tire's resistance to the generation of heat and its ability to dissipate heat, when tested under controlled conditions on a specified indoor laboratory test wheel. Sustained high temperature can cause the material of the tire to degenerate and reduce tire life, and excessive temperature can lead to sudden tire failure. The grade C corresponds to a level of performance, which all passenger car tires must meet under the Federal Motor Vehicle Safety Standard No. 109. Grades B and A represent higher levels of performance on the laboratory test wheel, than the minimum required by law.

WARNING!

The temperature grade for this tire is established for a tire that is properly inflated and not overloaded. Excessive speed, under-inflation, or excessive loading, either separately or in combination, can cause heat buildup and possible tire failure.

INDEX

Adding Engine Coolant (Antifreeze) 689
Adding Fuel 564
Additives, Fuel 562
Adjustable Pedals 186
Airbag 69
Airbag Deployment 84
Airbag Light 77
Airbag Maintenance 86
Airbag, Side 73
Airbag, Window (Side Curtain) 73
Air Cleaner, Engine (Engine Air Cleaner Filter) 679
Air Conditioner Maintenance 681
Air Conditioning 338
Air Conditioning Controls 338
Air Conditioning Refrigerant 681
Air Conditioning System 338
Air Pressure, Tires 534
Air Suspension 436
Alarm Light 280
Alarm, Panic 28
Alarm (Security Alarm) 21
Alarm System (Security Alarm) 21
Alterations/Modifications, Vehicle 7
Antifreeze (Engine Coolant) 688
  Disposal 691
Anti-Lock Brake System (ABS) 505
Anti-Lock Warning Light 275
Anti-Theft Security Alarm (Theft Alarm) 21
Anti-Theft System 21
Appearance Care 702
Ashtray 230
Auto Down Power Windows 48
Automatic Door Locks 40
Automatic Headlights 169
Automatic Transmission 379
  Adding Fluid 700
  Fluid and Filter Changes 701
  Fluid Change 701

Fluid Level Check 698
Fluid Type 698
Shifting 389
Special Additives 698
Axle Fluid 696
Axle Lubrication (Axle Fluid) 696

Back-Up Camera 208
Bar, Stabilizer/Sway System 450
Battery 679
Keyless Transmitter Replacement (RKE) 30
Belts, Seat 55
Body Builders Guide 6
Body Mechanism Lubrication 682
B-Pillar Location 528
Brake Assist System 506
Brake Control System, Electronic 505
Brake Fluid 694
Brake System 502
Anti-Lock (ABS) 503
Fluid Check 694
Master Cylinder 694
Parking 500
Warning Light 277
Brake/Transmission Interlock 379
Bulb Replacement 720
Bulbs, Light 128

Cab Top Clearance Lights 729
Camera, Rear 208
Camper 262
Capacities, Fluid 732
Caps, Filler
Oil (Engine) 677
Power Steering 499
Radiator (Coolant Pressure) 690

Carbon Monoxide Warning 125
Cargo Light 177
Car Washes 703
Cellular Phone 338
Center High Mounted Stop Light 727
Center Seat Storage Compartment 237
Certification Label. 567
Chart, Tire Sizing 523
Check Engine Light (Malfunction Indicator Light) . .276
Checking Your Vehicle For Safety 124
Checks, Safety 124
Child Restraint. 89
Cigar Lighter 230
Clean Air Gasoline 561
Cleaning
  Wheels 704
Climate Control 338
Cold Weather Operation 369
Compact Disc (CD) Maintenance 337
Compact Spare Tire. 539
Console, Overhead 211
Contract, Service. 753
Coolant Pressure Cap (Radiator Cap) 690
Cooling System. 687
  Adding Coolant (Antifreeze) 689
  Coolant Capacity 732
  Coolant Level 687
  Disposal of Used Coolant 691
  Drain, Flush, and Refill 688
  Inspection 691
  Points to Remember 693
  Pressure Cap 690
  Radiator Cap 690
  Selection of Coolant (Antifreeze) 688
Corrosion Protection 702
Cupholders 232

Customer Assistance 752

Data Recorder, Event 88
Daytime Running Lights 170
Dealer Service. 673
Defroster, Rear Window. 242
Defroster, Windshield 126
Delay (Intermittent) Wipers 180
Differential, Limited-Slip 470
Dipsticks
  Power Steering 499
Disabled Vehicle Towing 660
Disposal
  Antifreeze (Engine Coolant) 691
Door Locks 38
Door Locks, Automatic 40
Driving
  Off-Pavement 452
  Off-Road 452
  Through Flowing, Rising, or Shallow Standing Water 472
Dual Rear Wheels 548

Electrical Power Outlets. 226
Electric Rear Window Defrost. 242
Electronically Shifted Transfer Case. 416
Electronic Brake Control System 505
  Anti-Lock Brake System 505
  Brake Assist System 506
  Traction Control System 506
Electronic Range Select (ERS) 387
Electronic Speed Control (Cruise Control) 187
Electronic Stability Control (ESC) 514
Electronic Vehicle Information Center (EVIC). 208
Emergency Brake 500
Emergency, In Case of
  Freeing Vehicle When Stuck 654
  Hazard Warning Flasher 607

Jump Starting 650
Tow Hooks 655
Emission Control System Maintenance 672
Engine 669
Air Cleaner 679
Block Heater 375
Break-In Recommendations 123
Compartment 668
Compartment Identification 668
Coolant (Antifreeze) 734
Exhaust Gas Caution 125
Flooded, Starting 369
Fuel Requirements 560
Jump Starting 650
Oil 675
Oil Filler Cap 677
Oil Selection 676
Oil Synthetic 678
Overheating 607
Engine Oil Viscosity 677
Engine Oil Viscosity Chart 677
Enhanced Accident Response Feature 80
Entry System, Illuminated 22
Ethanol 561
Event Data Recorder 88
Exhaust Gas Caution 125
Exhaust System. 125
Exterior Lighting. 169
Exterior Lights 128

Filters
Air Cleaner 679
Engine Oil 678
Engine Oil Disposal 678
Flashers
Turn Signal 128
Flat Tire Stowage 622
Flooded Engine Starting 369

Fluid, Brake 736
Fluid Capacities 732
Fluid Leaks 128
Fluid Level Checks
  Brake 694
  Power Steering 499
Fluids, Lubricants and Genuine Parts 734
Fog Lights 173
Fold Flat Load Floor 244
Four-Way Hazard Flasher 607
Four Wheel Drive 412
Freeing A Stuck Vehicle 654
Front Axle (Differential). 696
Fuel. 560
  Adding 564
  Additives 562
  Clean Air 561
  Ethanol 561
  Filler Cap (Gas Cap) 567
  Gasoline 560
  Materials Added 562
  Methanol 561
  Octane Rating 560
  Requirements 560
  Tank Capacity 732
Fuel System Caution 565
Fuses 709

Gas Cap (Fuel Filler Cap) 567
Gasoline, Clean Air 561
Gasoline (Fuel) 560
Gasoline, Reformulated 561
Gauges
  Speedometer 280
  Tachometer 275
Gear Ranges. 390
Gear Select Lever Override 656
General Information 20

Glass Cleaning 706
Grocery Bag Retainer. 242
Gross Axle Weight Rating 570
Gross Vehicle Weight Rating. 570
Guide, Body Builders 6
GVWR 567

Hazard
  Driving Through Flowing, Rising, or Shallow Standing Water 472
Hazard Warning Flasher 607
Headlights 722
  Automatic 169
  Cleaning 706
  High Beam 179
  High Beam/Low Beam Select Switch 179
  Passing 179
  Switch 169
Head Restraints 160
Heated Mirrors 144
Heater 338
Heater, Engine Block 375
High Beam/Low Beam Select (Dimmer) Switch 179
Hill Descent Control 511
Hill Descent Control Indicator 511
Hitches
  Trailer Towing 575
Hoisting. 649
Hood Release 166
Hub Caps. 626

Ignition 16
  Key 12
Ignition Key Removal 16
Illuminated Entry 22
Immobilizer (Sentry Key) 18
Infant Restraint 89
Inflation Pressure Tires 544

Inside Rearview Mirror 136
Instrument Cluster 275
Instrument Panel and Controls 273
Instrument Panel Lens Cleaning 707
Integrated Trailer Brake Controls 583
Interior Appearance Care 705
Interior Lights 174
Intermittent Wipers (Delay Wipers) 180
Introduction 4
Inverter Outlet (115V) 231

Jack Location 608
Jump Starting 650

Key-In Reminder 18
Keyless Enter-N-Go 42
Keyless Entry System 23
Key, Programming 20
Key, Replacement 19
Keys 12
Key, Sentry (Immobilizer) 18

Lane Change and Turn Signals 178
Lane Change Assist 179
Lap/Shoulder Belts 55
Latches 128
Lead Free Gasoline 560
Leaks, Fluid 128
Life of Tires 542
Light Bulbs 128
Lights 128
  Airbag 77
  Alarm 280
  Anti-Lock 275
  Anti-Lock Warning 504
  Automatic Headlights 169
  Brake Assist Warning 519
  Brake Warning 277

Bulb Replacement 722
Cap Top Clearance 729
Cargo 177
Center Mounted Stop 727
Check Engine (Malfunction Indicator) 276
Courtesy/Reading 175
Daytime Running 170
Electronic Stability Program (ESP) Indicator 519
Exterior 128
Fog 173
Four-Wheel Drive Indicator 416
Hazard Warning Flasher 607
Headlights 169
High Beam 179
High Beam Indicator 279
High Beam/Low Beam Select 179
Hill Descent Control Indicator 511
Illuminated Entry 22
Instrument Cluster 275
Interior 174
Oil Pressure 280
Passing 179
Seat Belt Reminder 279
Security Alarm (Theft Alarm) 280
Service 720
Side Marker 731
SmartBeams 171
Theft Alarm (Security Alarm) 280
Tire Pressure Monitoring (TPMS) 281
Traction Control 519
Transfer Case 416
Turn Signal 128
Warning (Instrument Cluster Description) 275
Limited-Slip Differential 470
Loading Vehicle 567
Tires 528

Locks 38
Automatic Door 40
Child Protection 41
Door 38
Power Door 39
Low Tire Pressure System 549
Lubrication, Body 682

Maintenance Free Battery. 679
Maintenance Procedures 674
Maintenance Schedule 740
Malfunction Indicator Light (Check Engine). 672
Manual, Service 756
Manual Transmission
Fluid Level Check 697
Lubricant Selection 736
Memory Seat 162
Methanol 561
Mirrors 136
Electric Powered 142
Heated 144
Memory 162
Outside 139
Rearview 136
Trailer Towing 146
Modifications/Alterations, Vehicle 7
Monitor, Tire Pressure System 549
Mopar Parts 673
MTBE/ETBE 561
Multi-Function Control Lever. 178

Navigation System (Uconnect® gps) 208
New Vehicle Break-In Period 123

Occupant Restraints 51
Occupant Restraints (Sedan) 73

Octane Rating, Gasoline (Fuel) 560
Off-Pavement Driving (Off-Road) 452
Off-Road Driving (Off-Pavement) 452
Oil, Engine 675
Capacity 732
Change Interval 676
Dipstick 675
Disposal 678
Filter 678
Filter Disposal 678
Identification Logo 676
Recommendation 676
Synthetic 678
Viscosity 677
Oil Filter, Selection 678
Onboard Diagnostic System 671
Operating Precautions 671
Operator Manual (Owner's Manual) 4
Outside Rearview Mirrors 139
Overdrive. 399
Overdrive OFF Switch 399
Overhead Console 211
Overheating, Engine 284
Owner's Manual (Operator Manual) 4

Paint Care 702
Panic Alarm 28
Parking Brake 500
Park Sense System, Rear 191
Passing Light 179
Pedals, Adjustable 186
Personal Settings 304
Pets 123
Pets, Transporting 123
Pickup Box 246
Placard, Tire and Loading Information 529

Power
Distribution Center (Fuses) 709
Door Locks 39
Mirrors 142
Outlet (Auxiliary Electrical Outlet) 226
Seats 147
Sliding Rear Window 243
Steering 496
Sunroof 222
Windows 47
Power Steering Fluid 736
Pregnant Women and Seat Belts 68
Pretensioners
Seat Belts 67
Programmable Electronic Features 304
Programming Transmitters (Remote Keyless Entry) . . .23

Radial Ply Tires 536
Radiator Cap (Coolant Pressure Cap) 687
Radio Operation 338
Rain Sensitive Wiper System 182
Ramp Travel Index 452
Rear Axle (Differential) 696
Rear Cargo Area Utility Rails 260
Rear Park Sense System 191
Rear Seat, Folding 157
Rear Window Features 242
Rear Window, Sliding 244
Reclining Rear Seats 156
Recorder, Event Data 88
Recreational Towing 596
Shifting into Transfer Case Neutral (N) 599
Shifting out of Transfer Case Neutral (N) 602
Reformulated Gasoline 561
Refrigerant 682
Reminder, Seat Belt 67
Remote Control
Starting System 34

Remote Keyless Entry (RKE) 23
Remote Sound System (Radio) Controls 335
Remote Starting System. 34
Replacement Bulbs 720
Replacement Keys 19
Replacement Parts. 673
Replacement Tires 543
Reporting Safety Defects 755
Restraint, Head. 160
Restraints, Child. 89
Restraints, Occupant 51
Rotation, Tires 547

Safety Checks Inside Vehicle 126
Safety Checks Outside Vehicle 128
Safety Defects, Reporting 755
Safety, Exhaust Gas 125
Safety Information, Tire 521
Safety Tips 124
Schedule, Maintenance 740
Seat Belt Maintenance 707
Seat Belt Reminder 67
Seat Belts. 51
  Adjustable Upper Shoulder Anchorage 63
  And Pregnant Women 68
  Child Restraint 89
  Extender 69
  Front Seat 55
  Inspection 126
  Pretensioners 67
  Reminder 279
  Untwisting Procedure 63
Seats 147
  Adjustment 147
  Folding Floor 244
  Memory 162

Power 147
Rear Folding 157
Reclining Rear 156
Security Alarm (Theft Alarm). 21
Selection of Coolant (Antifreeze). 734
Sentry Key (Immobilizer) 18
Sentry Key Programming 20
Sentry Key Replacement 19
Service Assistance 751
Service Contract 753
Service Manuals 756
Settings, Personal 304
Shifting 376
Automatic Transmission 379
Transfer Case 415
Transfer Case, Shifting into Transfer Case Neutral (N) 599
Transfer Case, Shifting out of Transfer Case Neutral (N) 602
Shift Lever Override 656
Shoulder Belts 55
Shoulder Belt Upper Anchorage. 63
Side Airbag 78
Signals, Turn 128
Sliding Rear Window
Power 243
SmartBeams 171
Snow Chains (Tire Chains). 545
Snow Plow. 591
Snow Tires 537
Spare Tire. 539
Spark Plugs 734
Speed Control (Cruise Control). 187
Speedometer. 280
Stabilizer/Sway Bar System 450
Starting 34
Automatic Transmission 366
Cold Weather 369

Engine Fails to Start 369
Remote 34
Starting Procedures (Gas Engines) 366
Steering
Power 496
Wheel, Heated 184
Wheel, Tilt 183
Steering Wheel Audio Controls 335
Steering Wheel Mounted Sound System Controls . . .335
Storage Compartment, Center Seat 237
Storage, Vehicle. 357
Storing Your Vehicle 720
Sun Roof 222
Supplemental Tire Pressure Information 544
Suspension, Air. 436
Sway Control, Trailer. 520
Synthetic Engine Oil 678
System, Remote Starting 34
Tachometer. 275
Tailgate 263
Tilt Steering Column 183
Tip Start. 367
Tire and Loading Information Placard 528
Tire Markings 521
Tires 128
Aging (Life of Tires) 542
Air Pressure 533
Chains 545
Compact Spare 539
Dual 548
General Information 533
High Speed 536
Inflation Pressures 534
Life of Tires 542
Load Capacity 528
Pressure Monitor System (TPMS) 549

Pressure Warning Light 281
Quality Grading 757
Radial 536
Replacement 543
Rotation 547
Safety 521
Sizes 523
Snow Tires 537
Spinning 541
Tread Wear Indicators 542
Tire Safety Information 521
Tongue Weight/Trailer Weight 578
Tonneau Cover 707
Tonneau Cover Cleaning 707
Torque Converter Clutch 400
Tow Hooks, Emergency 655
Towing 569
Disabled Vehicle 660
Guide 576
Recreational 596
Weight 576
Traction 471
Traction Control 506
Trailer Sway Control (TSC) 520
Trailer Towing 569
Cooling System Tips 591
Hitches 575
Minimum Requirements 580
Mirrors 146
Trailer and Tongue Weight 578
Wiring 588
Trailer Towing Guide. 576
Trailer Weight. 576
Transfer Case 697
Electronically Shifted 416
Fluid 736
Transmission 379
Automatic 379

Fluid 736
Maintenance 698
Shifting 376
Transmitter Battery Service (Remote Keyless Entry) . .30
Transmitter Programming (Remote Keyless Entry) . . .23
Transmitter, Remote Keyless Entry (RKE) 23
Tread Wear Indicators 542
Turn Signals 178

Uniform Tire Quality Grades 757
Unleaded Gasoline 560
Untwisting Procedure, Seat Belt 63
Utility Rails, Rear Cargo Area 260

Vehicle Identification Number (VIN) 6
Vehicle Loading 530
Vehicle Modifications/Alterations 7
Vehicle Storage 357
Viscosity, Engine Oil 677

Warning Lights (Instrument Cluster Description) . . .275
Warnings and Cautions. 6
Warranty Information 755
Washers, Windshield 181
Washing Vehicle 703
Water
Driving Through 472
Wheel and Wheel Trim 704
Wheel and Wheel Trim Care 704
Wheel Cover 626
Wheel Nut Torque. 627
Winch 476
Accessories 480
Operation 482
Rigging Techniques 494
Usage 476

Wind Buffeting 51
Window Fogging 357
Windows 47
  Power 47
  Rear Sliding 244
Windshield Defroster 126
Windshield Washers 180
  Fluid 180
Windshield Wiper Blades 683
Windshield Wipers 180
Wiper Blade Replacement 683
Wipers, Intermittent 180
Wipers, Rain Sensitive 182

INSTALLATION OF RADIO TRANSMITTING EQUIPMENT

Special design considerations are incorporated into this vehicle's electronic system to provide immunity to radio frequency signals. Mobile two-way radios and telephone equipment must be installed properly by trained personnel. The following must be observed during installation.

The positive power connection should be made directly to the battery and fused as close to the battery as possible. The negative power connection should be made to body sheet metal adjacent to the negative battery connection. This connection should not be fused.

Antennas for two-way radios should be mounted on the roof or the rear area of the vehicle. Care should be used in mounting antennas with magnet bases. Magnets may affect the accuracy or operation of the compass on vehicles so equipped.

The antenna cable should be as short as practical and routed away from the vehicle wiring when possible. Use only fully shielded coaxial cable.

Carefully match the antenna and cable to the radio to ensure a low Standing Wave Ratio (SWR).

Mobile radio equipment with output power greater than normal may require special precautions.

All installations should be checked for possible interference between the communications equipment and the vehicle's electronic systems.

RAM

SERVICE

STICK WITH THE SPECIALISTS®

Chrysler Group LLC
14D241-126-AA

First Edition

Printed in U.S.A.