CONTENTS

ELISE & EXIGE; 2004 M.Y. ONWARDS; WITH 1ZZ/2ZZ ENGINE

		Section
Technical Data	- Engine	TDP
	- Vehicle	TDQ
Chassis		AH
Bodycare & Repair		BQ
Body Fittings		BR
Front Suspension		CI
Rear Suspension		DH
Engine & Engine Management	- Lotus supplement	EH
	- Toyota 1ZZ/2ZZ engine repair manual	*
	* see separate manual B120T0327J	
	- Toyota 2ZZ-GE engine supplement	#
	# see separate manual C120T0327J	
Engine Management		EMP
Transmission	- Lotus supplement	FJ
	- Toyota C64 transmission repair manual	~
	~ see separate manual D120T0327J	
	- Toyota C56 transmission repair manual	^
	^ see separate manual TBA	
Wheels & Tyres		GH
Steering		HG
Brakes		JJ
Engine Cooling		KH
Fuel System	- Except North America	LJ
	- North America	LK
Electrics		MP
Maintenance & Lubrication		OI
Air Conditioning, Heating & Ventilation		PL
Clutch		QH
Passive Restraint (North America)		WD
Supplement - Exige Supercharged (S/C)		Exige S/C
Supplement - 2-Eleven		2-Eleven

Downloaded from www.Manualslib.com manuals search engine

VEHICLE IDENTIFICATION NUMBER & ENGINE NUMBER

The Vehicle Identification Number (V.I.N.) is stamped on the chassis in the right hand front wheelarch area, viewable with the front wheels turned to right full lock, and is also printed on a label stuck to the inside of the chassis sideframe alongside the driver's seat. The engine number is marked on a vertical patch at the right hand side of the rear face of the cylinder block, adjacent to the clutch housing.

Both numbers should always be quoted with any vehicle enquiries, as Factory records are filed against V.I.N., and specification change points are identified by V.I.N. or engine number. The vehicle licence number should be considered irrelevant, since it may not accurately reflect vehicle age, and may also be changed during the car's life.

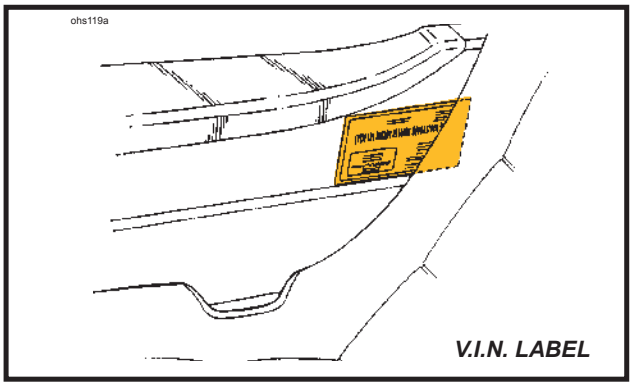

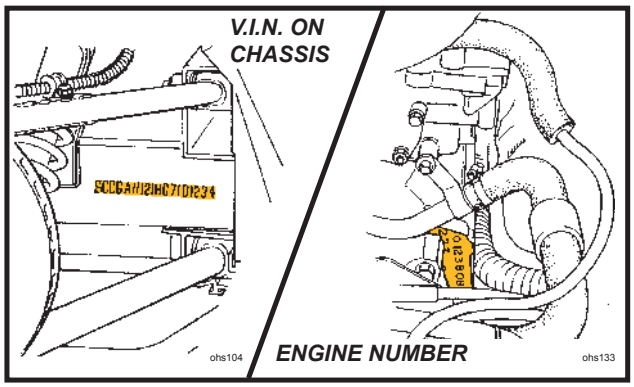

The V.I.N. comprises 17 characters, coded in accordance with European Economic Community (EEC) and National Highway Traffic Safety Association (NHTSA) directives. For change point identification in Service Notes, Service Bulletins and Service Parts Lists, typically, only characters 10 (model year), and 14 to 17 (serial number) will be quoted.

'2004 M.Y. onwards

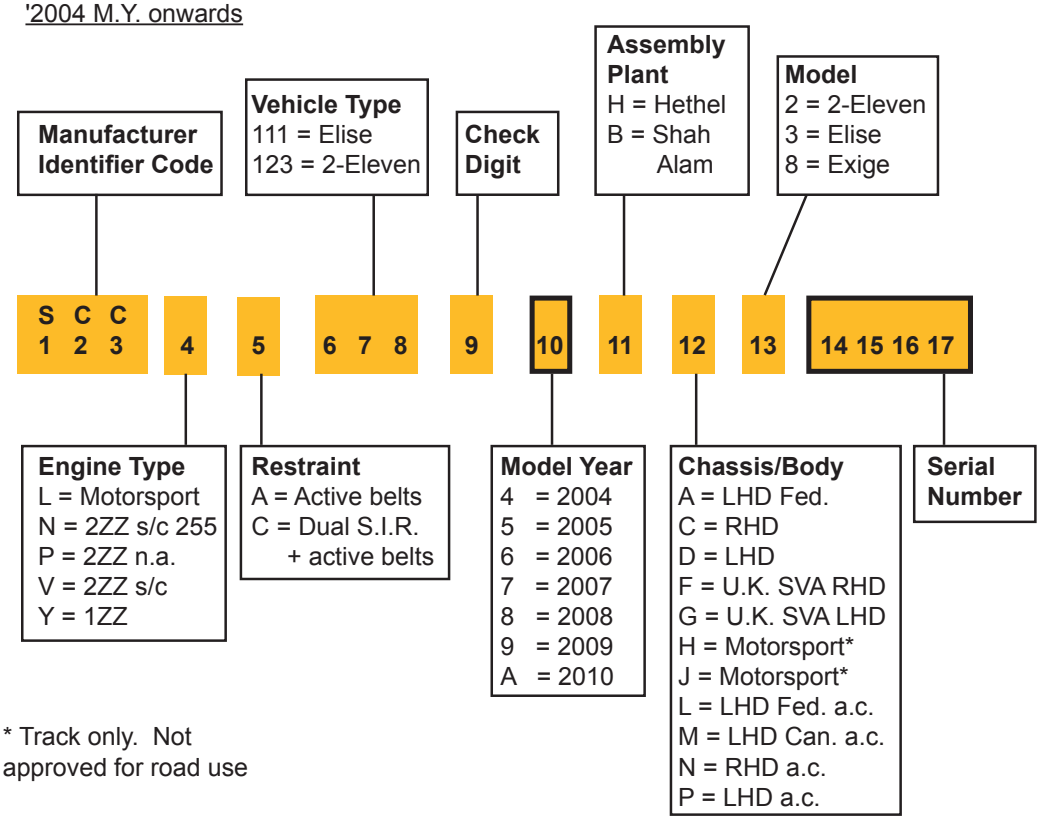

* Track only. Not approved for road use

Downloaded from www.Manualslib.com manuals search engine

MODEL HISTORY MILESTONES

Elise 111R Introduction: January 2004

VIN character 4 = P; Character 13 = 3; Serial number from 0970

Note that the serial number sequence is shared with other Elise variants.

Changes from previous model include: Toyota powertrain with 1.8 litre VVTL-i engine and 6-speed transmission. Twin exhaust tailpipes exiting through centre of diffuser. Larger fuel tank with new pump. Revised chassis rail rear ends, new rear subframe, revised seat belt mounting frame backstays. Revised rear suspension wishbones, springs and dampers. ABS brake control with vacuum servo. Revised front bonnet grilles and access covers.

2004 Exige Introduction: March 2004

VIN character 4 = P; Character 13 = 8; Serial number from 1092

Note that the serial number sequence is shared with other Elise variants.

Differences compared with Elise 111R include: Restyled front and rear clamshells with roof scoop, new tailgate panel and strut mounted rear aerofoil. Front body splitter panel. Re-styled road wheels, wider on the front, and Yokohama A048 tyres.

2005 M.Y. Elise for North America: May 2004

VIN character 10 = 5; Character 12 = L; Serial number from 0001

Note that the serial number sequence is shared with other Elise variants when '05 M.Y. is adopted for those models later in the year.

Differences compared with Elise 111R include: Driver and passenger airbags, pyrotechnic seat belt pretensioners; Re-styled fascia and dashboard structure; Front speakers moved onto top surface of fascia, stowage pockets incorporated into dashboard end panels, fixed windscreen demist vents. Engine start button in driver's side switch panel. Revised springs and dampers, Yokohama AD07 tyres. Side marker lamps on front and rear wheelarch lips. Revised fuel system with fuel filler flap.

Lotus Sport Exige 240R: March 2005

Limited edition of 50 units produced as post registration official factory conversions of '05 Exige by the Lotus Sport workshops at Hethel, for U.K. and certain overseas territories. The car is not identifiable from the VIN coding.

Differences compared to standard Exige include: 243 bhp engine upgrade using Eaton M62 supercharger with integral by-pass valve, air/air chargecooler and 5th fuel injector. Re-programmed ECU. Accusump. Stiffened springs & Ohlins adjustable dampers. Adjustable front anti-roll bar. Chassis rear brace kit. Forged 5-spoke widened roadwheels & Yokohama A048 tyres. Motorsport brake pads, braided hoses, yellow callipers, Castrol SRF brake fluid. Sport Yellow body colour with black wheels, or Sport Black body with silver wheels. Black interior with yellow inserts. 4-point harnesses, T45 roof hoop and backstays.

2006 M.Y. Introduction: September 2005

VIN character 10 = 6; Serial number restarts at 0001, common to all variants.

Introduction of USA Exige and Canadian Elise.

5-speed Elise remains unchanged.

Differences between 6-speed '06 Elise and '05 include; Electronic throttle control (using no mechanical cable). Optional Lotus Traction Control (LTC) or Limited Slip Differential (LSD) with LTC. Standard fit Yokohama AD07 tyres on non-USA cars. Optional forged wheels with new 6.0 in front size. LED rear lamp clusters incorporating reflectors (formerly separate), and commonised USA type CHMSL. ProBax seat foams. New body colours. USA & Canadian Elise; revised fuel tank and evap. loss system. Canadian Elise uses daytime running lights and clutch down start allow switch. USA Exige similar to non-USA, but with USA airbag interior.

Sports Racer: October 2005

Special paint versions of '06 M.Y. 111R in either Ardent Red with triple Monaco White stripes, or Nightfall Blue with twin Monaco White stripes. Combined total of 199 units with unique build plate on sill. Forged wheels (6J on front), AD07 tyres, sport suspension, twin front oil coolers, LTC. Black leather interior with red or blue stitching, and red or blue 'Elise' embroidered into head restraints. Sports Racer decals.

Downloaded from www.Manualslib.com manuals search engine

Exige Cup 190 & 240: January 2006

Limited number of competition oriented naturally aspirated (190) or supercharged (240) models produced as post registration official factory conversions of '06 Exige by the Lotus Sport workshops at Hethel for U.K. and certain overseas territories. Not identifiable from VIN coding.

Differences compared to 240R (see above) include: Electronic throttle, high flow port injectors (no 5th). Cup 240 fitted with torque sensing LSD with LTC. Cup 190 uses friction plate LSD. Standard Exige wheels in 'Hi-power' silver. Race cars fitted with FIA 6-point roll cage, remote kill switch, extinguisher system. Standard body colours.

Exige S: February 2006

VIN character 4 = V

Factory built type approved supercharged Exige. Not USA.

Differences to standard Exige include: 221 PS supercharged engine similar to 240R but using electronic throttle, smooth flow inlet adaptor, standard injectors without 5th injector, modified downpipe, optimised muffler with single oval tailpipe. Enlarged roof duct inlet for chargecooler. Body colour splitter, scoops and aerofoil. 'Exige S' decal on rear transom, 'S' on front quarter panels.

USA Lotus Sport Elise: March 2006

Limited edition of 50. Saffron Yellow with twin Storm Titanium stripes. Saffron Yellow centre console. Yellow highlighted sports seats, 'carbon' door trim inserts. Harness bar, T45 seat belt mounting frame. Motorsport mats, stalks, winders and parking brake sleeve. Traction control, supersport suspension, black forged wheels, Yokohama A048s, braided brake hoses, silicone fluid, motorsport clutch. Lotus Sport decals and Union flags. Lotus Sport chassis plate.

2007 M.Y. & Elise S Introduction: June 2006

VIN character 10 = 7; Serial number restarts at 0001, common to all variants.

VIN character 4 identifies engine type. Elise S = Y

Differences between '07 Elise/Exige and '06 include: Elise 111R renamed Elise R; New sealed headlamp units; raised LOTUS lettering on rear transom; additional screen pillar seal; Alpine audio; improved HVAC ducting. New model Elise S uses 1ZZ-FE engine producing 100 kW, with variable inlet timing but fixed valve lift, plastic inlet manifold, revised intake snorkel, revised exhaust manifold and downpipe, smaller tailpipes within standard trims. Elise S also uses new C56 5-speed transmission and 6-spoke roadwheels sharing styling of standard '01 model wheels.

USA Exige S: October 2006

The specification of the USA Exige S is that of the standard USA Exige and option packs, apart from the engine, which is as non-USA Exige S with the following exceptions: High flow port injectors, specific engine programming, 223 PS, 223 Nm. Carry-over features from the non-USA Exige S include exhaust downpipe and optimised muffler with single oval tailpipe, roof air intake funnel mouth.

Exige S British GT Special Edition: November 2006

Celebrating Lotus Sport Cadena's 2006 British GT3 Team Championship victory.

Differences to standard Exige S include: Torsen LSD & Lotus Traction Control. Chassis rear brace kit. T45 roof hoop & stays. Braided brake hoses. Level 1 sports exhaust. Forged 7-bifurcated spoke silver wheels. Lotus Sport black metallic body colour with Sport yellow & Arctic silver quad stripes, supplier decals on sills, Lotus Sport visor strip, Cadena decals on front wings, GT3 decal on rear clam, GT3 winners decal with unique build number on rear quarter panel, Lotus Sport build plate with build number. 4-point harnesses, black/yellow door trims and unique black/yellow trimmed seats. Optional a.c. Optional GT pack available as post registration official factory conversion by Lotus Sport workshops at Hethel for U.K. and certain overseas territories, includes: High flow injectors, different ECU & unique calibration for 243 bhp, Accusump, 2-way adjustable Ohlins dampers with uprated springs, 308mm front discs & 4-piston A.P. callipers, Pagid pads, Castrol SRF brake fluid.

Downloaded from www.Manualslib.com manuals search engine

USA Low Speed Damage Mitigation: January 2007

From '07 USA VIN serial no. 1579.

To meet USA safety legislation, modifications made to Elise/Exige: Front; armatures and foam inserts added between crash structure and clamshell. Rear; bumper panel housing foam pads either side of licence plate, narrower rear grilles, reinforced boot floor and diffuser support panel, stiffened diffuser. Some elements commonised for all markets.

Lotus Sport Exige Cup 255: January 2007

Produced as post registration official factory conversions of '07 Exige S by the Lotus Sport workshops at Hethel for certain territories, excluding U.K. and USA. Not identifiable from VIN coding.

Based on Exige Cup 240 (see above) with following differences: Power increase to 255 PS by; unique ECU calibration, enlarged chargecooler, extended roof duct, larger air cleaner and intake spout, uprated fuel pump. A.P. Racing 4 piston alloy front callipers, 308mm front discs.

2-Eleven Introduction: May 2007

VIN character 6/7/8 = 123; Character 13 = 2

Extreme, minimalist, track focussed Elise variant based on Exige Cup 255 powertrain componentry, but using new chargecooler arrangement. Produced in small numbers for U.K. and certain overseas territories. In U.K. only, SVA road going version available. All other territories only for track use, in LHD or RHD.

New body with no doors or roof. Aeroscreen. Rear aerofoil in two versions. FIA compliant roll over bar. Chassis rear brace, unique front top wishbones and steering arms, optional Ohlins suspension. Accusump, twin front oil coolers. Standard LTC, optional variable LTC & Launch Control. Uprated clutch. Odyssey battery. Limited warranty for SVA cars. Extensive options list.

USA Elise Limited Edition 'Type 72D'

Limited edition of 50 cars to commemorate the 35th anniversary of Lotus' F1 1972 World Championship victory with the type 72D.

Phantom black body colour with hand painted gold pinstriping. Rear body spoiler, black diffuser. Gold laurel leaf decal on front quarters, gold 'Elise' and 'Type 72D' decals, gold raised LOTUS lettering, gold/black nosebadge, gold fuel filler cap. Gold Exige 8 split-spoke wheels with Yokohama A048 tyres and sports suspension. Black & gold seats and interior trim details with Limited Edition plaque. Scale model crash helmet.

Downloaded from www.Manualslib.com manuals search engine

ENGINE BAY UNDERTRAY/DIFFUSER

For certain service operations, it may by necessary to remove the engine bay undertray and/or diffuser panel. The panels contribute to the aerodynamic performance of the car, and also help to keep the engine bay clean. Do not run the car without the panels fitted.

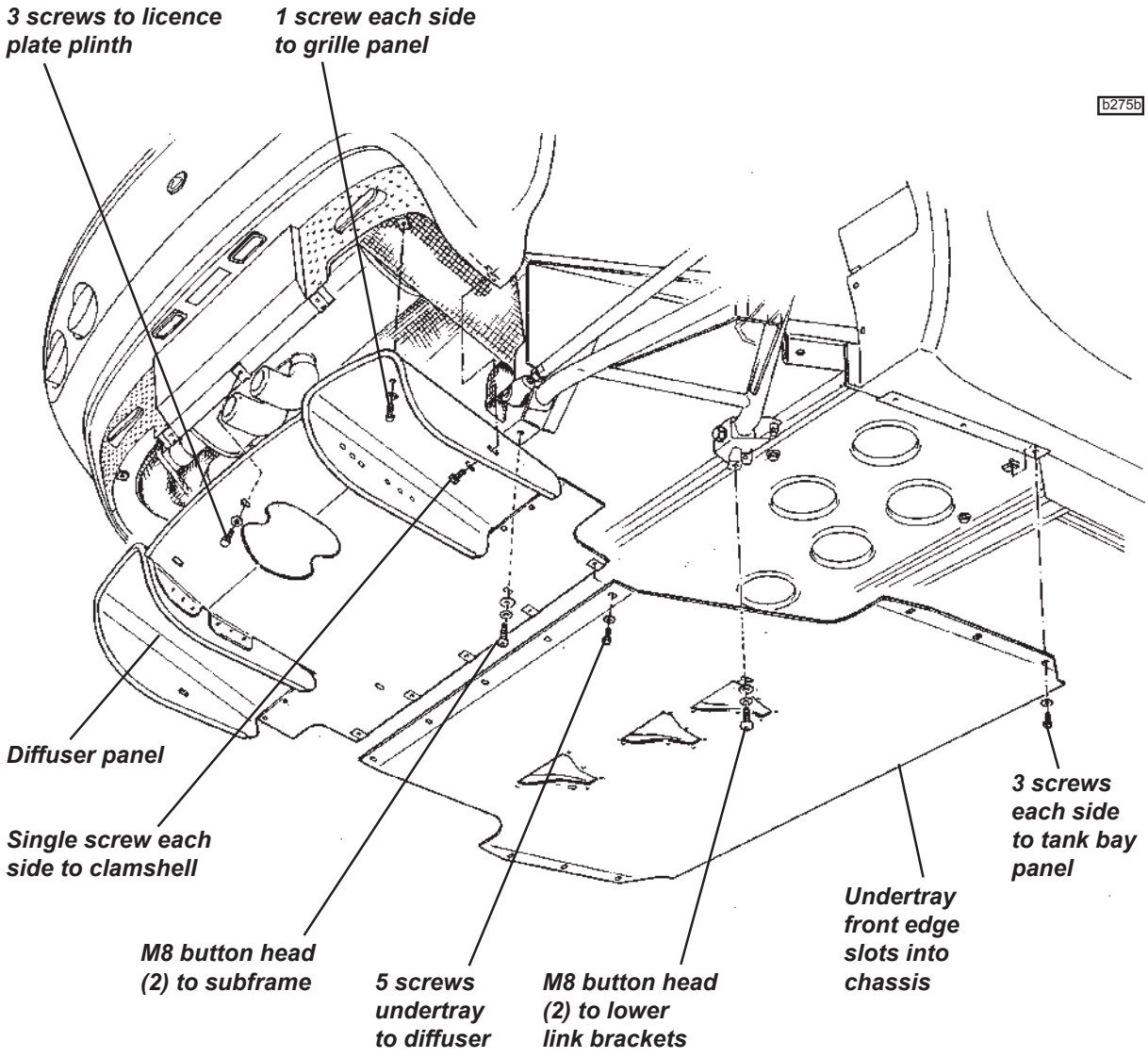

Downloaded from www.Manualslib.com manuals search engine

JACKING POINTS

Care must be taken when using a lifting jack or hoist to position the device only in one of the the areas shown in the illustration, with a suitable rubber or timber pad protecting the chassis from surface damage. If a 4-point lift is to be used, the engine bay undertray/diffuser panel (if fitted) must first be removed. When using a 4-point lift, it is strongly recommended that for optimum stability and safety, positions B and D are used.

A; Identified by a blue sticker. Beneath crossmember ahead of fuel tank bay. To be used one side at a time for wheel changing - lifts both wheels on one side. *Do not use with a four point garage lift.*

B; Beneath the front end of the right or left hand main chassis rail, behind the front wheelarch. Garage use with 4-point lift in conjunction with (C).

C; *The engine undertray/diffuser panel must first be removed.* Beneath the outboard end of the chassis crossmember ahead of the rear wheelarches. Take care to position the jack between the fixing screws for the fuel tank bay perforated undershield. Garage use with 4-point lift in conjuction with (B).

D; *The engine undertray/diffuser panel must first be removed.* Beneath the rear subframe, close to the lower wishbone rearmost mountings.

Jacking at any other point may damage the chassis or body structure and/or jeopardise safety.

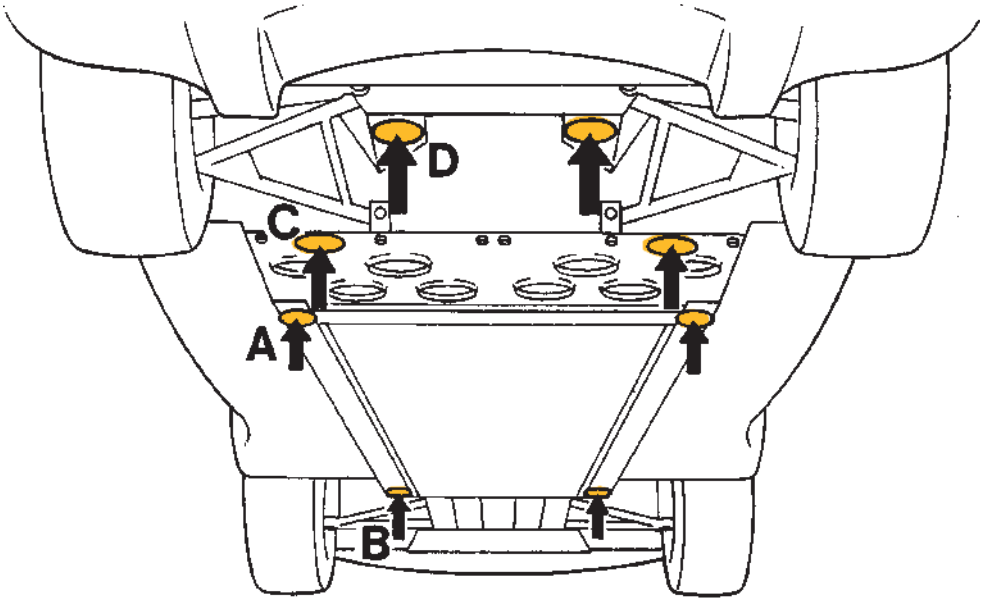

ohs49sn

Downloaded from www.Manualslib.com manuals search engine

TECHNICAL DATA - ENGINE

SECTION TDP

	Page
General	2
Cylinder Block	2
Cylinder Head	3
Valves & Springs	3
Camshafts	3
Pistons	3
Connecting Rods	3
Crankshaft	3
Oil Pump	3
Coolant Thermostat	3

sn_tdp_engine_cyclone.indd 1 03/07/2006 14:59:41
Downloaded from www.Manualslib.com manuals search engine

GENERAL

				2ZZ-GE	1ZZ-FE
Type designation	- All except Elise S				
	- Elise S				
Configuration & no. of cylinders				in-line 4	-
Capacity				1796 cm³	1794 cm³
Bore				82.00 mm	79.00 mm
Stroke				85.00 mm	91.50 mm
Camshafts				Chain driven DOHC	-
Valves				4VPC in pentroof chambers	-
Valve control	- inlet			Variable timing & lift	Variable timing
	- exhaust			Variable lift	-
Valve timing	- inlet	- low & medium speed	- open	33° BTDC to to 10° ATDC	all speeds 48° BTDC to 5° BTDC
			- close	15° ATDC to 58° ATDC	all speeds 12° ATDC to 55° ATDC
		- high speed	- open	58° BTDC to 15° BTDC	
			- close	54° ABDC to 97° ABDC	
	- exhaust	- low & medium speed	- open	14° BBDC	all speeds 42° BBDC
			- close	34° ATDC	all speeds 2° ATDC
		- high speed	- open	36° BBDC	
			- close	60° ATDC	
Compression ratio				11.5:1	10.0:1
Compression pressure (250 rpm)			- new	1400 kPa (203 psi)	1500 kPa (218 psi)
			- service limit	1000 kPa (145 psi)	-
Firing order				1,3,4,2	-
Spark plugs				NGK IFR6A11	NGK BKR5EYA-11
Spark plug gap				1.1 mm	1.0 ± 0.05 mm
Maximum continuous engine speed				8000 rpm	6,800 rpm
Maximum transient engine speed				8500 rpm	7,000 rpm
Idle speed				850 rpm	-
Ignition system				Direct ignition using individual H.T. coils for each cylinder	-
Fuel system				Fully sequential indirect fuel injection, Lotus T4 controller	-
Fuel requirement (minimum)				Unleaded 95 RON	-
Peak power (1999/99/EC)				141 kW (192 PS) @ 7,800 rpm	100 kW (136 PS) @ 6,200 rpm
Peak torque (1999/99/EC)				181 Nm @ 6,800 rpm	172 Nm @ 4,200 rpm
Exhaust emissions			- CO	0.42 g/km	0.23 g/km
			- HC	0.078 g/km	0.050 g/km
			- NOx	0.0121 g/km	0.0217 g/km
			- HC + NOx	0.0792 g/km	0.0717 g/km
			- CO_2	208 g/km	196 g/km

CYLINDER BLOCK

Material	Aluminium alloy, MMC cylinder bores	Aluminium alloy, cast iron liners
Deck face flatness tolerance	0.05 mm	-
Cylinder bore diameter	82.000 - 82.013 mm	79.000 - 79.013 mm

sn_tdp_engine_cyclone.indd 2 03/07/2006 14:59:41
Downloaded from www.Manualslib.com manuals search engine

CYLINDER HEAD		2ZZ-GE	1ZZ-FE
Material		Aluminium alloy	-
Head face flatness tolerance		0.05 mm	-
Reface limit		No machining	-
VALVES & SPRINGS			
Valve seat angle in head		45°	-
Valve face angle		44.5°	-
Cold valve clearance (between cam & follower)	- inlet	0.10 - 0.16 mm	0.15 - 0.25 mm
	- exhaust	0.24 - 0.30 mm	0.25 - 0.35 mm
Valve guide standout		15.3 - 15.7 mm	8.7 - 9.1 mm
Valve spring free length	- inlet	46.4 mm	45.9 mm
	- exhaust	46.5 mm	45.9 mm
CAMSHAFTS			
End float	- new	0.04 - 0.14 mm	0.04 - 0.10 mm
	- service limit	0.15 mm	0.11 mm
PISTONS			
Diameter - @ 90° to pin, 12 mm from bottom edge		81.975 - 81.993 mm	
- @ 90° to pin, 25 mm from top edge			78.925 - 78.935 mm
Ring gap, 110 mm from block top face - std.	- no.1	0.25 - 0.35 mm	-
	- no.2	0.35 - 0.50 mm	-
	- oil rail	0.15 - 0.40 mm	-
- max.	- no.1	1.1 mm	-
	- no.2	1.2 mm	-
	- oil rail	1.1 mm	-
Ring groove clearance		0.030 - 0.070 mm	-
CONNECTING ROD			
Small end bush inside diameter		20.011 - 20.023 mm	20.012 - 20.021 mm
Big end side clearance		0.16 - 0.34 mm	-
CRANKSHAFT			
Crankshaft endfloat	- new	0.04 - 0.24 mm	-
	- service limit	0.30 mm	-
Main journal diameter		47.988 - 48.000 mm	-
Crankpin diameter		44.992 - 45.000 mm	43.992 - 44.000 mm
Max. taper & out of round, journals & crankpins		0.02 mm	-
OIL PUMP			
Oil pressure - idle, running temperature		39 kPa (6 psi) min.	29 kPa (4 psi) min.
- 3,000 rpm, running temperature		300 - 540 kPa (45 - 80 psi)	-
Outer rotor to housing clearance	- new	0.13 - 0.18 mm	-
	- service limit	0.33 mm	-
Inner rotor tip clearance	- new	0.06 - 0.18 mm	-
	- service limit	0.33 mm	-
Rotor end float	- new	0.03 - 0.08 mm	-
	- service limit	0.16 mm	-
COOLANT THERMOSTAT			
Valve opening temperature		80 - 84°C	-
Valve lift at 90°C		10 mm	-
Header tank pressure cap		108 kPa	-
Cap opening pressure		93 - 123 kPa	-

sn_tdp_engine_cyclone.indd 3 03/07/2006 14:59:41
Downloaded from www.Manualslib.com manuals search engine

sn_tdp_engine_cyclone.indd 4 03/07/2006 14:59:41
Downloaded from www.Manualslib.com manuals search engine

sn_tdp_engine_cyclone.indd 5 03/07/2006 14:59:41
Downloaded from www.Manualslib.com manuals search engine

TECHNICAL DATA - VEHICLE

SECTION TDQ

Page

Dimensions 2
Capacities 2
Wheels & Tyres 3
Front Suspension 3
Rear Suspension 4
Electrical 5
Transmission 5
Clutch 6
Brakes 6
Steering 6
Fuel Consumption 6

Downloaded from www.Manualslib.com manuals search engine

DIMENSIONS

Overall length		- Elise	3785 mm
		- Exige	3797 mm
Overall width	- exc. mirrors	- Elise	1719 mm
		- Exige	1727 mm
	- inc. mirrors		1850 mm (approx.)
Overall height (at kerb weight)		- Elise	1117 mm
		- Exige	1159 mm
Wheelbase			2300 mm
Track	- front		1457 mm
	- rear		1507 mm
Ground clearance (mid-laden)		- except std. USA	130 mm
		- std. USA	135 mm
Front overhang		- Elise	783 mm
		- Exige	805 mm
Rear overhang		- Elise	702 mm
		- Exige	692 mm
Approach angle (at kerb)			13.5°
Departure angle (at kerb)			23°
Unladen weight	- 111R/Elise R (lightest)	- total	860 kg >
		- front	327 kg > incl. full fuel tank
		- rear	533 kg >
	- Elise S (lightest)	- total	862 kg }
		- front	328 kg } incl. full fuel tank
		- rear	534 kg }
	- USA Elise (heaviest)	- total	912 kg)
		- front	344 kg) incl. full fuel tank
		- rear	568 kg)
	- non-USA Exige	- total	875 kg >
		- front	328 kg > incl. full fuel tank
		- rear	547 kg >
	- non-USA Exige S	- total	935 kg }
		- front	355 kg } incl. full fuel tank
		- rear	580 kg }
	- USA Exige	- total	920 kg)
		- front	350 kg) incl. full fuel tank
		- rear	570 kg)
Max. weight	- 111R/R, Exige	- total	1166 kg >
		- front	443 kg > incl. occupants & luggage
		- rear	723 kg >
	- Elise S	- total	1126 kg }
		- front	428 kg } incl. occupants & luggage
		- rear	698 kg }
	- USA Elise	- total	1162 kg)
		- front	441 kg) incl. occupants & luggage
		- rear	721 kg)
	- non-USA Exige S	- total	1199 kg >
		- front	456 kg > incl. occupants & luggage
		- rear	743 kg >
Trailer towing			Not permissible

CAPACITIES

Engine oil - refill inc. filter	4.4 litre
(+ 3.5 litre if front mounted oil coolers are drained)	
High/low dipstick mark difference	1.5 litre
Transmission oil	2.3 litre
Fuel tank	43.5 litre

Downloaded from www.Manualslib.com manuals search engine

Coolant	12 litre
Refrigerant	550 g
Rear luggage compartment	50 kg/112 litre

WHEELS & TYRES

Tyres

Type		- Elise std. - prior '06	Bridgestone Potenza RE040
		- from '06	Yokohama Advan Neova AD07
		- USA Elise	Yokohama Advan Neova AD07
		- Elise option, Exige	Yokohama A048
Size	- front	- Elise std.	175/55 R16 80W
		- USA Elise	175/55 R16 80W
		- Elise option, Exige	195/50 R16 84W
	- rear	- Elise std. - RE040	225/45 R17 90W
		- AD07	225/45 R17 91W
		- USA Elise - AD07	225/45 R17 91W
		- Elise option, Exige - A048	225/45 R17 90W
Pressure (cold)		- front	1.8 bar (26 lb/in²)
		- rear	2.0 bar (29 lb/in²)

Winter Tyres

Type	- front	Pirelli 210 Snowsport
	- rear	Pirelli 240 Snowsport
Size	- front	195/50 R16
	- rear	215/45 R17
Pressure (cold)	- front	1.8 bar (26 lb/in²)
	- rear	1.9 bar (27.5 lb/in²)
Tyre studding		Not permitted
Tyre chains		Pewag Neon X3-NX373 fitted only on rear winter tyres

Wheels

Type		- Elise 111R/R/USA	Cast alloy, 8 spoke
		- Elise S	Cast alloy, 6 spoke
		- Exige std.	Cast alloy, 8 Y-spoke
		- Elise/Exige option	Forged alloy, 7 split-spoke
Size	- front	- Elise std.	5.5J x 16
		- Elise option	6.0J x 16 (forged + AD07)
		- Elise option, Exige	6.5J x 16 (forged + A048)
	- rear		7.5J x 17
Wheel bolt torque			105 Nm (77 lbf.ft)

FRONT SUSPENSION

Type	Independent. Upper and lower wishbone; co-axial coil spring/telescopic damper unit; anti-roll bar
Steering axis inclination	12 ° nominal

Geometry specification - Standard Elise:

Mid-laden ride height (reference height for geometry check)

- USA Elise from VIN 3013 & 111R/R/S	- front	130 mm below front end of chassis siderail
	- rear	130 mm below rear end of chassis siderail
- USA Elise prior VIN 3013	- front	135 mm below front end of chassis siderail
	- rear	135 mm below rear end of chassis siderail

Castor	- optimum	+ 3.8°
	- tolerance range	+ 3.5° to + 4.1°; max. side/side 0.35°

Downloaded from www.Manualslib.com manuals search engine

Camber	- optimum	- 0.1°
	- tolerance range	+ 0.1° to - 0.3°; max. side/side 0.2°
Alignment	- optimum	Zero
	- tolerance range	0.5 mm toe out, to 0.7mm toe-in overall

Geometry specification - Sportpack Elise, Exige:
Mid-laden ride height (reference height for geometry check)

	- front	130 mm below front end of chassis siderail
	- rear	130 mm below rear end of chassis siderail
Castor	- optimum	+ 3.8°
	- tolerance range	+ 3.5° to + 4.1°; max. side/side 0.35°
Camber	- optimum	- 0.3°
	- tolerance range	- 0.1° to - 0.5°; max. side/side 0.2°
Alignment	- optimum	Zero
	- tolerance range	0.5 mm toe out, to 0.5 mm toe-in overall

Geometry specification - Supersportpack Elise, Exige:
Mid-laden ride height (reference height for geometry check)

	- front	120 mm below front end of chassis siderail
	- rear	120 mm below rear end of chassis siderail
Castor	- optimum	+ 3.8°
	- tolerance range	+ 3.5° to + 4.1°; max. side/side 0.35°
Camber	- optimum	- 0.2°
	- tolerance range	+ 0.1° to - 0.3°; max. side/side 0.2°
Alignment	- optimum	Zero
	- tolerance range	0.5 mm toe out, to 0.7 mm toe-in overall

REAR SUSPENSION

Type	Independent. Upper and lower wishbone; co-axial coil spring/telescopic damper.

Geometry specification - Standard Elise:
Mid-laden ride height (reference height for geometry check)

- USA Elise from VIN 3013 & 111R/R/S	- front	130 mm below front end of chassis siderail
	- rear	130 mm below rear end of chassis siderail
- USA Elise prior VIN 3013	- front	135 mm below front end of chassis siderail
	- rear	135 mm below rear end of chassis siderail
Camber	- optimum	- 1.8°
	- tolerance range	- 1.6° to - 2.0°; max.side/side 0.2°
Alignment	- optimum	1.2 mm toe-in each side
	- tolerance range	1.2 to 1.8mm toe-in each side max.side/side 0.3 mm

Geometry specification - Sportpack Elise, Exige:
Mid-laden ride height (reference height for geometry check)

	- front	130 mm below front end of chassis siderail
	- rear	130 mm below rear end of chassis siderail
Camber	- optimum	- 1.8°
	- tolerance range	- 1.6° to - 2.0°; max.side/side 0.2°
Alignment	- optimum	1.5 mm toe-in each side
	- tolerance range	1.2 to 1.8 mm toe-in each side max.side/side 0.3 mm

Geometry specification - Supersportpack Elise, Exige:
Mid-laden ride height (reference height for geometry check)

	- front	120 mm below front end of chassis siderail
	- rear	120 mm below rear end of chassis siderail

Downloaded from www.Manualslib.com manuals search engine

Camber	- optimum	- 2.5°
	- tolerance range	- 2.0° to - 2.7°; max.side/side 0.2°
Alignment	- optimum	1.8 mm toe-in each side
	- tolerance range	1.5 to 2.0 mm toe-in each side max.side/side 0.3 mm

ELECTRICAL

Light Bulbs			*Wattage*	*Type*	
Headlamps	- prior '07	- main beam	55	H7	
		- dip beam	55	H1	
	- from '07	- main beam	55	H7U	
		- dip beam	55	H7U	
Driving lamps			55	H3	
Front side/parking lamps			5	W5W	
Side repeater lamps			5	WY5W amber	
Front turn indicators			21	PY21w amber	
Rear turn indicators	- prior '06		21	H21	)
Stop/Tail lamps	- prior '06		4/21	P21/4w	)
Stop lamps (USA)	- prior '06		21	H21	) '06 onwards use
Tail lamps	- prior '06		5	R5W	) LED clusters
Tail/turn lamps (USA)	- prior '06		4/21	P21/4w	)
Fog/Tail lamps	- prior '06		4/21	P21/4w	
Reversing lamp	- prior '06		21	H21	
Turn lamps (non-USA)	- from '06		16	W16W	
Reverse lamps	- from '06		16	W16W	
High mounted stop lamp			2.5	16 x LED	
Licence plate lamps			5	C5W	
Interior lamp			5	W5W	

System voltage/polarity			12V negative earth
Alternator			85A
Battery	- non USA	- type	Yuasa 063/3
		- cranking power (SAE)	380A
		- reserve capacity	70 minutes
		- dimensions (mm)	L 207, W 175, H 175
	- USA	- type	Delco 19001598
		- BCI code	26R-6YR
		- cranking power	550 amps @ -18°C
		- reserve capacity	80 minutes

TRANSMISSION

Gearbox	- all except Elise S	6-speed manual incl. final drive
	- Elise S	5-speed manual incl. final drive
Differential	- standard	Open, bevel gear
	- option	Torsen type LSD with Lotus Traction Control

Gear	***Ratio***			***Final Drive***		***mph(km/h)/1000 rpm***	
	5-speed	*6-speed*		*5-speed*	*6-speed*	*5-speed*	*6-speed*
First	3.17 : 1	3.17 : 1	)			5.36 (8.62)	5.1 (8.2)
Second	1.90 : 1	2.05 : 1	)			8.73 (14.1)	7.7 (12.4)
Third	1.39 : 1	1.48 : 1	)	4.31 : 1	4.53 : 1	12.0 (19.2)	10.7 (17.2)
Fourth	1.03 : 1	1.17 : 1	)			16.2 (26.0)	13.6 (21.8)
Fifth	0.82 : 1	0.92 : 1	)			20.4 (32.8)	17.3 (27.8)
Sixth	-	0.81 : 1	)			-	19.4 (31.3)
Reverse	3.25 : 1	3.25 : 1	)				

Downloaded from www.Manualslib.com manuals search engine

CLUTCH

Type		Single dry plate. Diaphragm spring cover. Hydraulic release.
Friction plate diameter		215 mm
Diaphragm finger clearance		1.00 mm
Diaphragm finger height	- new	37.5 - 32.1 mm
	- service limit	42.75 mm
Friction plate thickness	- new	7.4 - 6.9 mm
	- service limit	5.6 mm
Rivet depth	- new	1.00 mm
	- service limit	0.20 mm
Friction plate run-out	- new	0.80 mm
	- service limit	1.00 mm
Pressure plate warp	- service limit	0.15 mm

BRAKES

Brake discs		Cast iron, curved vane ventilated, cross-drilled discs on all four wheels.
Calipers	- front	A.P. Racing, aluminium alloy body, one pair of opposed pistons
	- rear	Brembo, cast iron, single piston sliding rear calipers
Disc size	- front & rear	288 mm
Operation		Tandem master cylinder with vacuum servo and Kelsey Hayes EBC430 Anti-lock system
Parking brake		Cable operation of rear calipers, self adjusting for pad wear.

STEERING

Type	Rack and pinion
Turns, lock to lock	2.8
Gear ratio	15.8:1
Rack height plate	6 notch

FUEL CONSUMPTION

		1ZZ-GE	**2ZZ-GE**
1999/100/EC	- urban	11.3 l/100km	12.1 l/100km
	- extra urban	6.5 l/100km	6.8 l/100km
	- combined	8.3 l/100km	8.8 l/100km

Downloaded from www.Manualslib.com manuals search engine

CHASSIS

SECTION AH

	Sub-Section	Page
General Description	AH.1	3
Chassis Straightness Check	AH.2	4
Rear Subframe	AH.3	5

sn_ah_cyclone.indd 1 03/03/2006 10:51:12
Downloaded from www.Manualslib.com manuals search engine

ELISE CHASSIS UNIT

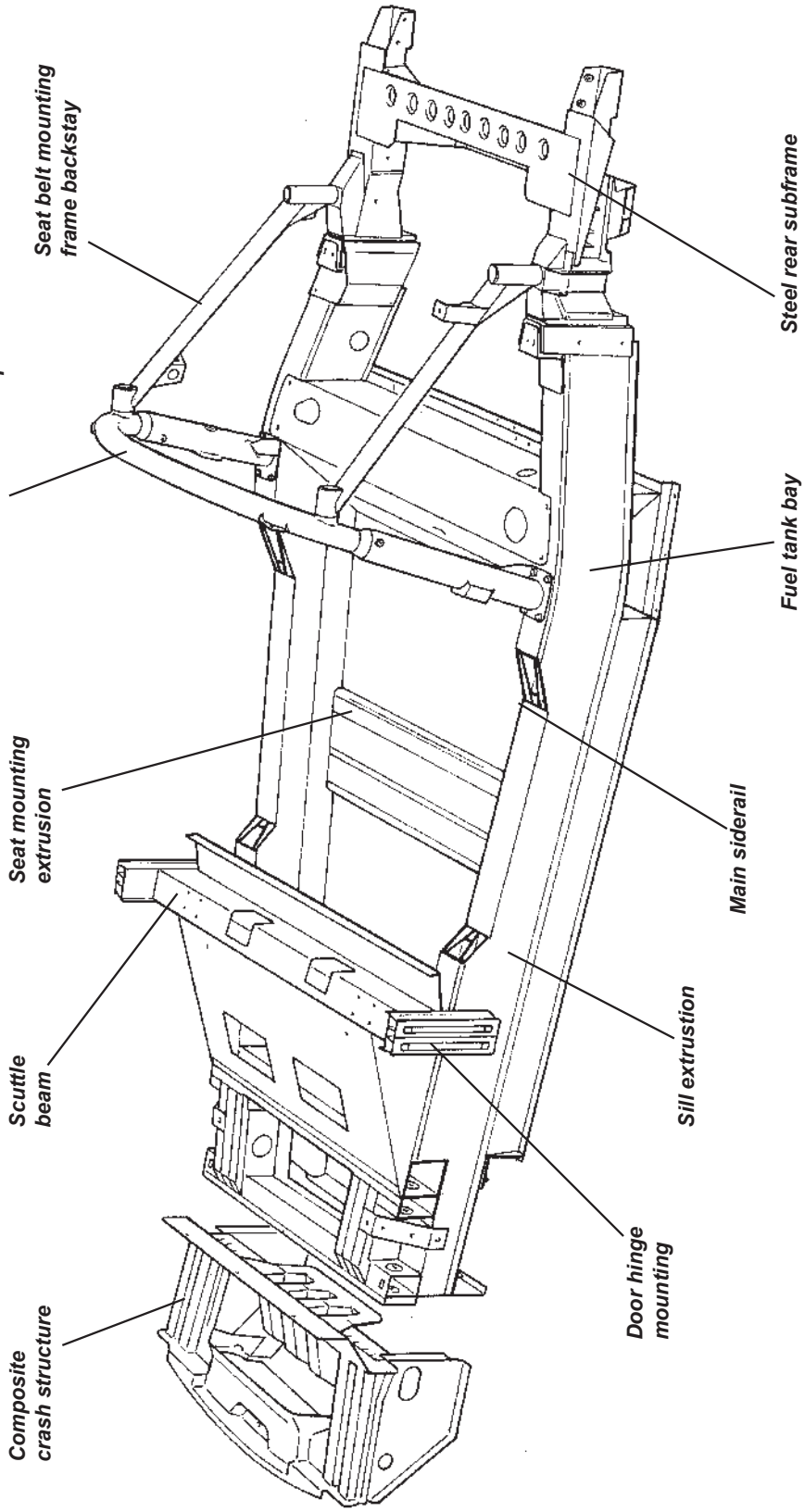

sn_ah_cyclone.indd 2 03/03/2006 10:51:13
Downloaded from www.Manualslib.com manuals search engine

AH.1 - GENERAL DESCRIPTION

The chassis frame of the Lotus Elise is constructed primarily from aluminium alloy extrusions and formed alloy sheet, with the various sections bonded together using an epoxy adhesive with secondary drive-in fasteners. The basic chassis unit includes the passenger cell, front suspension mountings, fuel tank housing, and mid mounted engine bay, with a fabricated sheet steel rear subframe bolting to the rear of the engine bay to provide rear suspension mountings and rear body support. A tubular steel seat belt mounting frame is bolted to the top of the chassis structure and incorporates a roof hoop for additional occupant protection. The cabin rear bulkhead, body sills (inc. 'B' posts), front energy absorbing crash structure and scuttle/windscreen mounting frame, are all constructed from glass fibre composite and are bonded to the chassis structure using an elastomeric adhesive. The front and rear outer body clamshells are each constructed from glass fibre composite mouldings, fixed to the body and chassis structure with threaded fasteners to facilitate service access and economic repair.

Two main chassis siderail extrusions, 210mm deep and 100mm wide, run along each side of the passenger compartment between the front and rear suspension mountings, splaying outwards towards the rear before curving inwards around the fuel tank bay and terminating at each side of the engine bay in a vertical section to provide engine mounting platforms and a flange to which the rear subframe is attached. To enhance cockpit access, the height of the siderails is reduced in the door area, and internal reinforcement added in order to maintain beam strength and torsional rigidity.

Running along the underside of the siderails from the front suspension crossmember to the fuel tank bay are sill extrusions which carry the cockpit floor panel. The single skin floor panel is swaged for stiffness, and is reinforced by a ribbed transverse extrusion running across the inside of the tub, which also provides for the seat mountings. Behind the passenger cell, the siderails are linked by a pair of transverse crossmembers which are used in conjunction with a folded sheet upper panel to form an open bottomed fuel tank cell with a detachable, screw fixed, closing panel with swaged lightening holes. Note that this lower panel contributes to the structural integrity of the chassis, such that the vehicle should not be operated without it fitted.

The rear ends of the siderails are joined behind the engine bay by a galvanised sheet steel fabricated subframe which provides mountings for the rear suspension pivots nad damper abutment, engine rear stabiliser and exhaust muffler.

At the front of the passenger compartment, four transverse extrusion beams are used to provide mountings for the front suspension pivots, and house the steering rack, with an upright section used each side to anchor the top of the spring/damper unit. Five interlinked extruded floor sections together with additional extrusions, connect the transverse beams to form an open topped space to house the heater/a.c. unit. An extruded scuttle beam links the tops of the siderails at the front of the cockpit, and is reinforced by a panel extending to the steering rack crossmember. These elements are used to mount the steering column and pedal box, with a vertical extrusion fixed to each end of the scuttle beam to carry the door hinge pillar.

To the front end of the chassis is bonded a glass fibre composite 'crash structure' which incorporates tubular sections designed to dissipate collision energy and control the rate of deceleration sustained by the occupants. Ducting and mountings for the horizontally positioned engine cooling radiator are also incorporated in this structure.

The bonded and rivetted alloy chassis structure described above is considered a non-serviceable single unit, jig built to fine tolerances, to which no structural repairs are approved. Superficial, cosmetic, or non-structural localised damage may be cosmetically repaired as necessary, but in the case of accident damage resulting in significant bending, tearing or distortion of the aluminium chassis, such that the specified suspension geometry cannot be achieved by the standard range of suspension adjustment provided, the recommended repair is to renew the partial body assembly, which comprises the chassis, rear subframe and the seat belt mounting frame together with jig bonded composite rear bulkhead, body sills, windscreen frame and crash structure. Also included are the radiator feed and return pipes in the chassis siderails, and those pipes and cables routed through the sills, including the heater and a.c. pipes, battery cable, clutch and brake pipes, and brake servo and oil cooler hoses.

sn_ah_cyclone.indd 3 03/03/2006 10:51:13
Downloaded from www.Manualslib.com manuals search engine

AH.2 - CHASSIS STRAIGHTNESS CHECK

In the absence of visual damage, the chassis may be checked for twist or distortion by utilising the tooling holes in the underside of the main side rails. If computer processed laser measuring equipment is not available, manual checks can be made with reference to an accurately level ground plane, e.g. an accurately set and maintained suspension geometry ramp/lift. Position the car on the lift, and proceed as follows:

1. Identify the tooling holes in the lower surface of each chassis main side rail. At the front end, between the suspension wishbone pivots, and at the extreme rear end of each rail.

2. Measure the height of each tooling hole above the reference plane and use jacks to adjust the height of the chassis in order to equalise any three of these dimensions.

3. Measure the deviation of the fourth dimension from the other three.
   Maximum service deviation = ± 2.0 mm.

4. Repeat operations (2) and (3) for each combination of corners to result in four values for the 'fourth' dimension deviation. If any one of these exceeds the service specification, the chassis should be considered damaged and replaced by a partial body assembly.

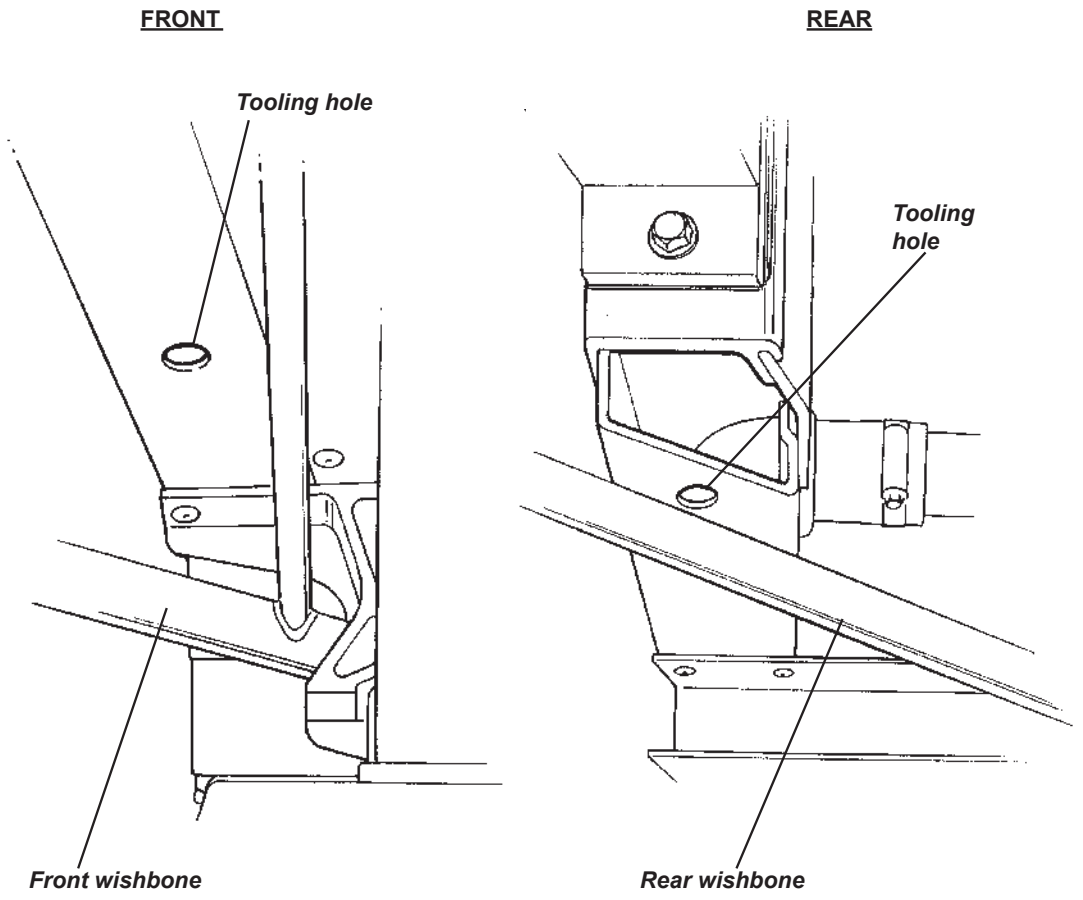

a27/27a

sn_ah_cyclone.indd 4 03/03/2006 10:51:14
Downloaded from www.Manualslib.com manuals search engine

AH.3 - REAR SUBFRAME

The rear ends of the chassis siderails are linked by a fabricated sheet steel subframe which provides mountings for the rear body section, rear suspension pivots, engine rear stabiliser, exhaust muffler and seat belt mounting frame struts. The subframe is secured to the siderails by two M12 bolts at each side, with an anti-corrosion shim plate interposed.

To remove rear subframe

1. Remove the rear clamshell (see section BR).

2. Remove exhaust heatshields, catalytic converter and muffler.

3. Disconnect the parking brake cables, wheel speed sensor harnesses and rear brake hydraulics. Release the driveshafts from the hubs, and remove both rear suspension assemblies complete, providing alternative support for the driveshafts.

4. Disconnect the inertia switch, and release from the subframe the oxygen sensor harness, wheel speed sensor harnesses and brake pipes.

5. Release the engine rear stabiliser mounting from either the subframe or transmission.

6. Release the roof hoop backstays from the subframe. Remove the two bolts each side securing the subframe to the chassis flange and withdraw the subframe from the car.

Fitting rear subframe

When bolting the subframe at each side to the chassis rail rear flange, ensure that the anti-corrosion shim plate is interposed. The lower fixing bolts should be inserted from the rear, using a washer and Nyloc nut inside the chassis extrusion. Apply Permabond A130 (A912E7033V) to the threads of the upper bolts before fitting from the front into the weldnuts in the subframe. Tighten all four bolts to 86 Nm. Continue re-assembly in reverse order to disassembly.

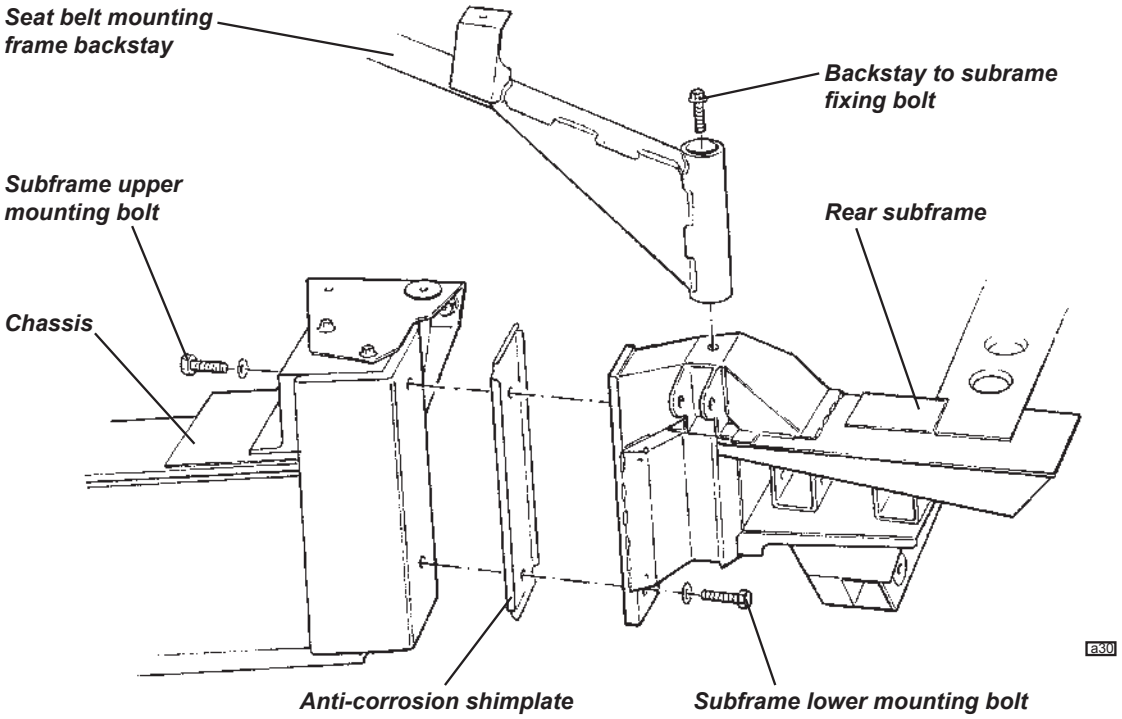

sn_ah_cyclone.indd 5 03/03/2006 10:51:14
Downloaded from www.Manualslib.com manuals search engine

BODYCARE & REPAIR

SECTION BQ

	Sub-Section	Page
General Description	BQ.1	3
Lotus Composite Body Features	BQ.2	3
Bodycare	BQ.3	4
Accident Damage Assessment	BQ.4	5
Body Panel Bonding Materials	BQ.5	6
Replacement of Bonded-On Panels - General	BQ.6	9
Front Crash Structure	BQ.7	10
Windscreen Frame	BQ.8	12
Sill Panels	BQ.9	16
Rear Bulkhead	BQ.10	17

sn_bq_cyclone.indd 1 03/03/2006 10:53:38
Downloaded from www.Manualslib.com manuals search engine

Body Panels

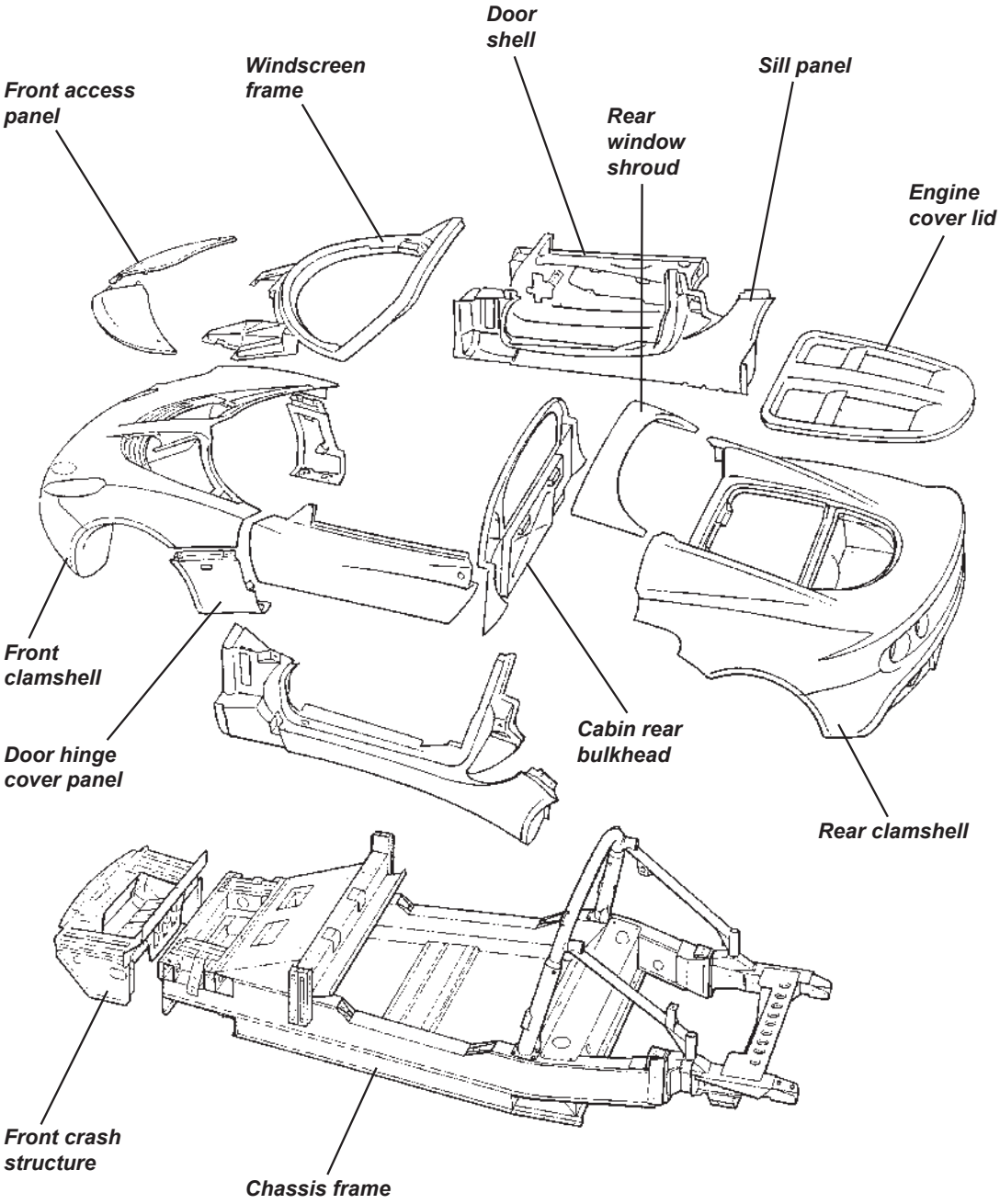

b277b

sn_bq_cyclone.indd 2 03/03/2006 10:53:38
Downloaded from www.Manualslib.com manuals search engine

BQ.1 - GENERAL DESCRIPTION

The body panels of the Lotus Elise are constructed of composite materials, with the external panels not being required to contribute to chassis rigidity. The panels are attached to the aluminium chassis and/or other body panels either by elastomeric polyurethane adhesive, or in the case of the front and rear clamshells, are bolted on for ease of dis-assembly and access to chassis parts. The composite mouldings are manufactured by one of several processes (see later) dependent on application, with a nominal thickness of 2.2 - 2.5 mm. The windscreen frame incorporates foam beams to create closed box sections for optimum strength and a 'crash structure' bonded to the front of the chassis incorporates longitudinal box sections to provide specific crush characteristics and absorb crash impact by progressive collapse. This structure also acts as a mounting and duct for the engine cooling radiator which is mounted horizontally on its top surface.

BQ.2 - LOTUS COMPOSITE BODY FEATURES

Composite structures have the ability to absorb high impact loads by progressive collapse, with impact damage being localised. In vehicle accidents this feature protects the occupants from injurious shock loads and greatly reduces the danger of entrapment by deformation of steel body panels. This behaviour also facilitates repair by either replacing the damaged bonded or bolt on panels, and/or integrating a replacement section with the undamaged area, using recognised approved methods which restore the panel to its original condition without residual strain or distortion.

The manufacturing process enables the thickness of composite mouldings to be varied in order to provide efficient structures of high strength and low weight. Composites will not corrode, so the strength of composite components is retained regardless of age, unless physical damage is sustained. On the Elise, the body construction features an assembly of mouldings to form a single piece for the whole of the nose and front wings, and a similar assembly for the whole of the rear body aft of the doors. These two 'clamshells' are fixed using threaded fasteners to permit easy removal for access to chassis or powertrain components, or to allow simple and economic accident repair. Other composite mouldings include the door shells, sills, front compartment lid, windscreen frame and rear bulkhead, some panels being bonded to the aluminium alloy chassis with an elastomeric adhesive.

A composite panel may return to its original shape after deflection, but beyond a certain level of flexibility, such treatment may result in the formation of surface cracks which may not be immediately apparent due to the masking effect of the paint film. A steel panel similarly treated would become dented or deformed. The cracking may be confined to the surface layer with no reduction in panel strength, but if the damage is more severe the composite structure below the surface may be weakened. Localised repairs can be made in either case. Possible causes of surface cracking include:

- Vehicle collision;
- Sitting, leaning heavily or pushing on the body or any composite panel;
- Knocking doors against obstructions when opening;
- Dropping objects onto a panel;
- Allowing unrestrained items to roll about in a luggage compartment;
- Fitting a front access panel or closing the engine cover onto projecting objects, e.g. luggage or tools;
- Applying excessive force to parts attached to composite panels e.g. mirrors, locks, aerial etc. (inc. action byvandals).
- Incorrect jacking.

The composite body panels of the Elise are manufactured by one of several processes dependent on the requirements of the panel concerned:

- The front and rear clamshells, sill panels, windscreen frame, door outer panels, hard top roof outer panel and front crash structure are produced by Injection Compression System Resin Transfer Moulding (ICS-RTM), whereby a mix of polyester resin and glass fibres is injected into a heated, chrome steel surfaced, closed mould. After filling, the gap between the two halves of the mould is then reduced in order to compress the moulding and ensure complete material flow and consistent structural quality. Panel thickness is a nominal 2.2 mm. The absence of the 'gel coat' used with other processes results in much greater resistance to surface damage, and minimum surface preparation for before painting.

sn_bq_cyclone.indd 3 03/03/2006 10:53:38
Downloaded from www.Manualslib.com manuals search engine

- The front access panels, engine cover lid, door hinge panels, door and roof inners and rear window shroud are produced from Low Pressure Sheet Moulding Compound (LPSMC), whereby flat sheets of composite material are formed using heated, chrome steel surfaced moulds to produce panels with a nominal thickness of 2.5 mm.
- A third process is used for the cabin rear bulkhead, bootbox and radiator mounting panel where the panel surface is not primarily visible. These panels are produced by a Polyurethane Structural Reaction Injection Moulding (PU SRIM) process.
- Body panels unique to the Exige model, including front and rear clamshells, door hinge cover panels and tailgate panel, are 'hand lay' composite mouldings with a nominal thickness of 2.5 mm.

Whichever production process applies, conventional composite repair techniques can be used to rectify structural or surface damage whenever repairs can be determined as being more economic than panel replacement.

BQ.3 - BODYCARE

The acrylic enamel paint finish of the Elise is extremely resistant to all normal forms of atmospheric attack. Following the simple maintenance procedure summarised below will help retain the gloss, colour and protective properties of the paint throughout the life of the vehicle. However, car finishes are not immune to damage, and amongst the more common causes of deterioration are:

- Atmospheric contaminants; dust, soot, ash, and acidic or alkaline aerosol mist can chemically attack paint.
- Abrasion; blowing sand and dust, or a dirty washing cloth.
- Tree sap and insect fluids; can form a water-insoluble polymer that adheres to the paint.
- Bird excrement; highly acidic or alkaline, they can chemically etch the paint. Wash off immediately.
- Leaves; contain tannic acid which can stain light finishes.
- Impact damage; granite chippings thrown up from poor or recently dressed road surfaces can subject the body to severe localised impact, and result in paint chips, especially around the vulnerable frontal panels. Do not follow other vehicles too closely in such circumstances.

Washing

Lotus recommends that the car be hand washed, using the following instructions:

Many contaminants are water soluble and can be removed before any harm occurs by thorough washing with plenty of lukewarm water, together with a proprietary car wash additive (household detergent and washing up liquid can contain corrosive salts, and will remove wax and accelerate oxidation). Frequent washing is the best safeguard against both seen and invisible contaminants. Wash in the shade, and use a cotton chenille wash mitt or a sponge rinsed frequently to minimise entrapment of dirt particles. Use a straight back and forth washing motion to avoid swirled micro scratches, and rinse thoroughly.

In order to minimise degradation from road salt, the underside of the chassis should be rinsed with clean water as soon as possible after driving on treated roads. Many fuel filling stations offer pressure washing facilities ideal for this purpose, but to not use on the painted bodywork or soft top roof.

Soft Top Roof:

1. Careful vacuuming of the soft top before washing may be helpful in removing excess dust and other foreign particles.
2. Wash in partial shade rather than strong sunlight, and wet the whole car before tackling the soft top.
3. Using only clean lukewarm water and a sponge (a chamois or cloth will leave lint, and a brush may abrade the threads) wash the entire top uniformly. Do NOT use a detergent, which may affect the waterproofing properties of the material.
4. Rinse the whole car to remove all soap from the fabric and to prevent streaking on the car bodywork.
5. Remove surface water with a sponge and allow to air dry in direct sunlight. Ensure that the roof is fully dry before stowing, as prolonged stowage of a wet or damp roof will promote rotting of the fabric.

Keeping the soft top clean by regular washing will enhance the life and maintain the appearance of the roof, and facilitate subsequent cleaning. The use of stronger cleansers should be left to professionals experi-

sn_bq_cyclone.indd 4 03/03/2006 10:53:39
Downloaded from www.Manualslib.com manuals search engine

enced in handling this type of fabric as discoloration and degradation of the special protective inner layer may result. The application of wax finishes, dressings or preservatives will cause stains which are difficult to remove and therefore should be avoided.

Paintwork Polishing

Eventually some loss of gloss, and an accumulation of traffic film, will occur. At this stage, after normal washing, the application of a good quality liquid polish will restore the original lustre of the paint film. Higher gloss of the paint finish, and added protection against contamination, can be obtained by the use of a wax polish; however, this can only be used successfully on a clean surface, from which the previous application has been removed with white spirit or a liquid polish cleaner.

Ventilation

Water lying on the paint surface for a lengthy period will eventually penetrate the paint film. Although the effects will not be visible immediately, a deterioration in the protective properties of the paint film will ultimately result. It is not recommended to store a wet car in a poorly ventilated garage. If good ventilation cannot be provided, storage outside on a hard standing or under a carport is to be preferred.

BQ.4 - ACCIDENT DAMAGE ASSESSMENT

The repair method to be employed in the rectification of accident damage to composite panels, is to be assessed reletive to the particular panel and its method of attachment:

Bolt-on Panels:
- Front Clamshell;
- Rear Clamshell;
- Door Shells;
- Front Body Access Panels;
- Engine Cover Lid;
- Door Hinge Cover Panels;
- Rear Window Shroud;
- Hard Top Roof.

These panels are secured by threaded fasteners and are easily removed for access to the back of any damaged area for repair by conventional composite techniques. Instructions for the removal and refitment of these panels are contained in section BR.

Bonded-on Panels:
- Windscreen Frame;
- LH & RH Sill Panels;
- Front Crash Structure;
- Rear Bulkhead

These panels are bonded to the chassis or to other panels using a flexible polyurethane adhesive which must be cut before the panel may be removed. In some cases, it may be necessary to partially remove another panel before the subject panel can be released. It is not generally economic to attempt to remove a bonded panel intact for later re-fitment.

The integrity of the front crash structure is crucial to the safety of the car in a frontal collision, and it is recommended not to attempt any major repair of this component. The damaged structure should be cut from the front of the chassis, and a new assembly bonded into position. The shape and positioning of the windscreen frame is crucial to the fit of the windscreen and sealing of the soft top roof, such that the only repairs which should be considered for this panel are cosmetic and superficial; any structural damage should entail panel replacement.

The sill panels include the ‘A’ and ‘B’ posts, and involve much labour time to replace. Localised repairs should be performed whenever possible, although access to the inside surface of some parts of the panels is not freely available.

Note that if damage is such as to require replacement of the chassis, replacement chassis assemblies are provided only as a 'partial body assembly' which includes jig bonded front crash structure, windscreen frame, side sills and rear bulkhead. The roof hoop and rear subframe are also included, as are the pipes, hoses and cables routed through the sills.

sn_bq_cyclone.indd 5 03/03/2006 10:53:39
Downloaded from www.Manualslib.com manuals search engine

BQ.5 - BODY PANEL BONDING MATERIALS

The materials used for bonding the body panels are manufactured by Dow Chemical, and in order to maintain the structural integrity of the vehicle, and in the case of the front crash structure, the safety, it is most important to use only the specified materials. The surface preparation and cleaning and priming operations are crucial to the performance of the adhesive, and must be followed in detail. The products to be used depend on the surface (substrate) onto which they are applied, and the following list identifies each application:

Anodised aluminium (e.g. chassis and components)

Cleaner:	Betawipe VP 04604	Lotus part no. A082B6150V
Primer:	Betapnme 5404	Lotus part no. A082B6337V
Adhesive:	Betaseal 1701	Lotus part no. A082B6281F
or	Betamate E2400	Lotus part no. A082B8415V

Unpainted or painted composite

Cleaner:	Betaclean 3900	Lotus part no. A100B6008V
Primer:	Betaprime 5404	Lotus part no. A082B6337V
Adhesive:	Betaseal 1701	Lotus part no. A082B6281F
or	Betamate E2400	Lotus part no. A082B8415V

Zinc plated and passivated steel

Cleaner:	Beatclean 3900	Lotus part no. A100B6008V
Primer:	Betaprime VP 01706 A+B	Lotus part no. A100B6070V
Adhesive:	Betaseal 1701	Lotus part no. A082B6281F

Glass

Cleaner:	Betawipe VP 04604	Lotus part no. A082B6150V
Primer:	Betaprime 5001	Lotus part no. A100B6009V
Adhesive:	Betaseal 1701	Lotus part no. A082B6281F
or	Betamate E2400	Lotus part no. A082B8415V

Uncoated Lexan/Perspex

Cleaner:	Abrasion & dry wipe	
Primer:	Betapnme 5404	Lotus part no. A082B6337V
Adhesive:	Betaseal 1701	Lotus part no. A082B6281F
or	Betamate E2400	Lotus part no. A082B8415V

Residual adhesive (i.e. rebonding to surface after cutting off old panel)

Cleaner, primer & re-activator:	Betawipe 4000	Lotus part no. A082B6355V
Adhesive:	Betaseal 1701	Lotus part no. A082B6281 F
or	Betamate E2400	Lotus part no. A082B8415V

Applicator Bottle

An applicator bottle is available for use with some cleaners and primers, and has a disposable felt pad which should be changed regularly to minimise surface contamination:

Applicator bottle:	A000Z1071F
Cap:	A082B6353S
Felt pad:	A082B6354S

Product Usage

BETAWIPE VP 04604 (A082B6150V):

Description: Activator and cleaning agent used to promote adhesion to the substrate surface. Supplied in a 250ml aluminium container with a YELLOW coloured cap.

Application:
- Wipe on/wipe off type.
- Pour Betawipe VP 04604 into applicator bottle, and immediately refit the yellow cap onto the container.

sn_bq_cyclone.indd 6 03/03/2006 10:53:39
Downloaded from www.Manualslib.com manuals search engine

- Push the applicator head onto the bottle, and fit the felt pad.
- Wet out the felt pan by inverting the applicator bottle and gently squeezing the sides.
- Wipe the pad over the substrate surface using minimal pressure to wet the surface.
- Immediately wipe off the activated/cleaned surface using a clean fibre free cloth, and discard.

Notes:
- If the substrate is very dirty, first wipe off the surface with a clean fibre free cloth and discard.
- Do not leave the caps off Betawipe containers. A milky colour indicates moisture absorption, and the material should be discarded.
- Only decant a sufficient quantity of Betawipe for the job concerned, and never pour material back into the container from the applicator bottle.
- Change the felt pad at regular intervals to reduce surface contamination.

BETACLEAN 3900 (A100B6008V)

Description: Degreaser and cleaning agent used for the removal of contamination from the substrate surface. Supplied in 1 litre aluminium container with a BLACK coloured cap.

Application:
- Wipe on/wipe off type.
- When substrate is very dirty, first wipe off the surface with a clean fibre-free cloth and discard.
- Dampen a fibre-free cloth with Betaclean 3900, and immediately replace the black cap.
- Thoroughly clean the substrate surface with Betaclean and discard the cloth.
- Wipe off the substrate with a clean fibre-free cloth and discard.

BETAWIPE 4000 (A082B6355V)

Description: Cleaning agent which acitvates the old adhesive layer to accept new adhesive. Supplied in 250 ml aluminium containers with a BLUE cap.

Application:
- The residual adhesive bead should be cut with a scalpal to leave an even thickness of approximately 1 to 2 mm.
- Dampen a fibre-free cloth with Betawipe 4000 and immediately replace the blue cap.
- Thoroughly clean the substrate surface with Betawipe and discard the cloth. Do not wipe off.
- Allow 2 - 3 minutes flash off time before applying adhesive.

BETAPRIME 5001 (A100B6009V)

Description: Adhesion promotor used to maximise the performance of the bonding between the cleaned and/or activated surface and the adhesive compound. Supplied in 250 ml aluminium container with GREEN coloured cap.

Application:
- Two steel balls inside the container are provided to assist mixing of the contents when shaken. Prior to decanting Betaprime 5001, shake the container for at least 60 seconds to disperse the solid content of the material into suspension.
- Pour the primer into the applicator bottle and immediately replace the green cap.
- Wet out the felt pan by inverting the applicator bottle and gently squeezing the sides.
- Wipe the pad over the activated/cleaned substrate surface to apply a continuous film of primer.
- Allow to dry for a minimum of 15 minutes before applying adhesive. If adhesive is not applied with 72 hours, wipe on/wipe off with Betawipe VP 04604.

Notes:
- The appearance of the primed areas should be deep black in colour with no streaks or voids.

To achieve this appearance, apply in smooth continuous uni-directional movement, not short backward and forward movements. The latter technique results in inconsistent film build.
Rework any poor areas after 5 minutes (tack time), applying in the same direction.
- Replace the felt pad if moisture absorption results in hardening.
- Never return unused Betaprime back into the aluminium container.

sn_bq_cyclone.indd 7 03/03/2006 10:53:39
Downloaded from www.Manualslib.com manuals search engine

BETAPRIME 5404 (A082B6337V)

Description: Adhesion promotor used to maximise the performance of the bonding between the cleaned and/or activated surface and the adhesive compound. Supplied in 250 ml aluminium container with RED coloured cap.

Application: - Two steel balls inside the container are provided to assist mixing of the contents when shaken. Prior to decanting Betaprime 5404, shake the container for at least 60 seconds to disperse the solid content of the material into suspension.
- Pour the primer into the applicator bottle and immediately replace the green cap.
- Wet out the felt pan by inverting the applicator bottle and gently squeezing the sides.
- Wipe the pad over the activated/cleaned substrate surface to apply a continuous film of primer.
- Allow to dry for a minimum of 15 minutes before applying adhesive. If adhesive is not applied with 24 hours, re-activate by applying a further coat of Betaprime 5404.

Notes: - The appearance of the primed areas should be deep black in colour with no streaks or voids.
To achieve this appearance, apply in smooth continuous uni-directional movement, not short backward and forward movements. The latter technique results in inconsistent film build.
Rework any poor areas after 5 minutes (tack time), applying in the same direction.
- Replace the felt pad if moisture absorption results in hardening.
- Never return unused Betaprime back into the aluminium container.

BETAPRIME VP 01706 A+B (A100B6070V)

Description: Adhesion promotor used to maximise the performance of the bonding between the cleaned and/or activated surface and the adhesive compound. Supplied in 250 ml aluminium containers of component A and component B.

Application: - Thoroughly shake component A container to disperse solid material. Remove the lid from the component A container and scrape any sediment from the botton of the container. Replace the container lid and thoroughly shake again to disperse the solid content.
- Pour the required amount of component A into a clean container, and add the same volume of component B. Replace lids immediately. Thoroughly mix the two components for 45 seconds minimum.
- Leave the mixed components to stand for 30 MINUTES. (Discard if unused after 8 hours)
- Pour the pnmer into the applicator bottle and wet out the felt pan by inverting the bottle and gently squeezing the sides.
- Wipe the pad over the cleaned substrate surface to apply a continuous THIN film of primer:
A thin, almost transparent film is all that is required. No attempt should be made to attain a completely opaque covering.
- Allow to dry for a minimum of 4 HOURS, before applying adhesive.

Notes: - To achieve a continuous thin film of VP 01706, apply in a smooth continuous uni-directional movement, not short backward and forward movements. The latter technique results in inconsistent film build.
- Replace the felt pad if moisture absorption results in hardening.
- Never return unused Betaprime back into the aluminium container.

BETASEAL 1701 (A082B6281F)

Description: One component moisture curing adhesive, providing high strength, permanently elastic bonds between various substrates. Supplied in 300 ml aluminium cartridge.

Application: - Remove the cartridge end ensuring there is no damage to the reinforcing sleeve.
- Pierce the neck of the cartridge and screw on the applicator nozzle. Cut the nozzle end to the required diameter and shape.
- Fit the cartridge into an air assisted gun, and extrude a smooth, even and continuous bead of Betaseal to the previously prepared substrate.
- Assemble the joint within 5 MINUTES.

Notes: - If the adhesive has to be touched or manipulated for any reason, use only *wetted* fingers.

sn_bq_cyclone.indd 8 03/03/2006 10:53:40
Downloaded from www.Manualslib.com manuals search engine

BETAMATE E2400 (A082B8415V - 220ml, A100B6258V - 450ml)

Description: Two component chemically curing adhesive, providing high strength, permanently elastic bonds between various substrates. Supplied in 220 and 450 ml aluminium cartridges.

Application: - An electrically driven Betagun Mk 11 is required to mix and extrude Betamate E2400. Refer to the operating instructions supplied with the gun.
- Extrude a smooth, even and continuous bead of Betamate to the previously prepared substrate.
- Assemble the joint within 5 MINUTES.

Notes: - If the adhesive has to be touched or manipulated for any reason, use only *wetted* fingers.

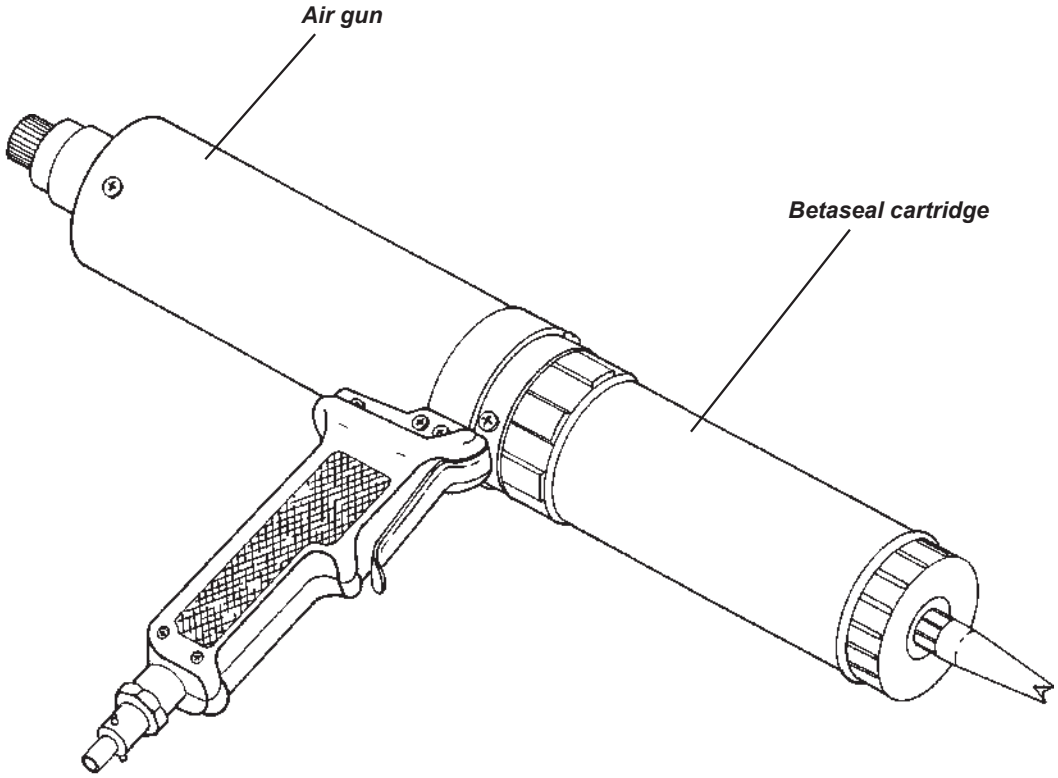

bj43

BQ.6 - REPLACEMENT OF BONDED-ON PANELS - GENERAL

Bonded body panels are secured using the Gurit-Essex products 'Betaseal' or 'Betamate', which are flexible polyurethane adhesives which must be cut in order for a panel to be removed. The recommended method of adhesive cutting is with the use of a pneumatic tool such as the Chicago Pneumatic CP838 PneuNife which uses a range of differently shaped cutting knives to which is imparted a vibrating action. This tool may also be used to remove windscreens.

Supplier:	Chicago Pneumatic, Utica, New York 13501, USA.
Catalogue no.:	CP838 Pneu-Nife
Recommended air pressure:	60 - 90 PSIG (4.0 - 6.2 bar)
Tool air inlet:	1/4" NPTF, 3/8" mm. hose size

sn_bq_cyclone.indd 9 03/03/2006 10:53:40
Downloaded from www.Manualslib.com manuals search engine

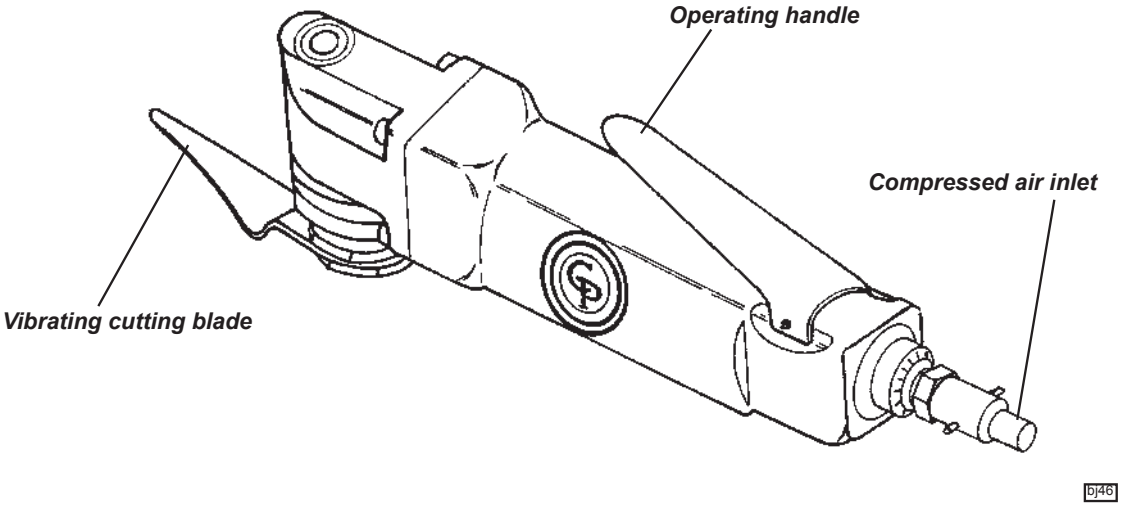

It is not generally practical to remove a bonded panel intact, for later refitment. Consequently, when necessary, the panel can be cut away for better access to the bonded joint. It is not necessary to remove all traces of sealant from the joint faces on the remaining panels or chassis, but any remaining sealant must be securely bonded and no thicker than 1 mm or the fit and joint gaps will be upset. It is essential always to follow the cleaning/priming/bonding operations meticulously if sufficiently strong and durable bonds are to be obtained. Always use the specified materials.

BQ.7 - FRONT CRASH STRUCTURE

The front crash structure consists of an upper and lower moulding bonded together and supplied only as an assembly. It is bonded to the front face of the chassis, and is braced by an alloy undershield screwed to the bottom front edge of the chassis, and to each lower side of the crash structure. The unit also acts as a ducting for the engine cooling radiator and a.c. condenser (if fitted) which are mounted horizontally on its top surface in a bolted-on composite radiator housing. Longitudinal tubes formed in the construction are designed to produce a particular crush characteristic in order to control the rate of deceleration of the vehicle occupants in a frontal collision.

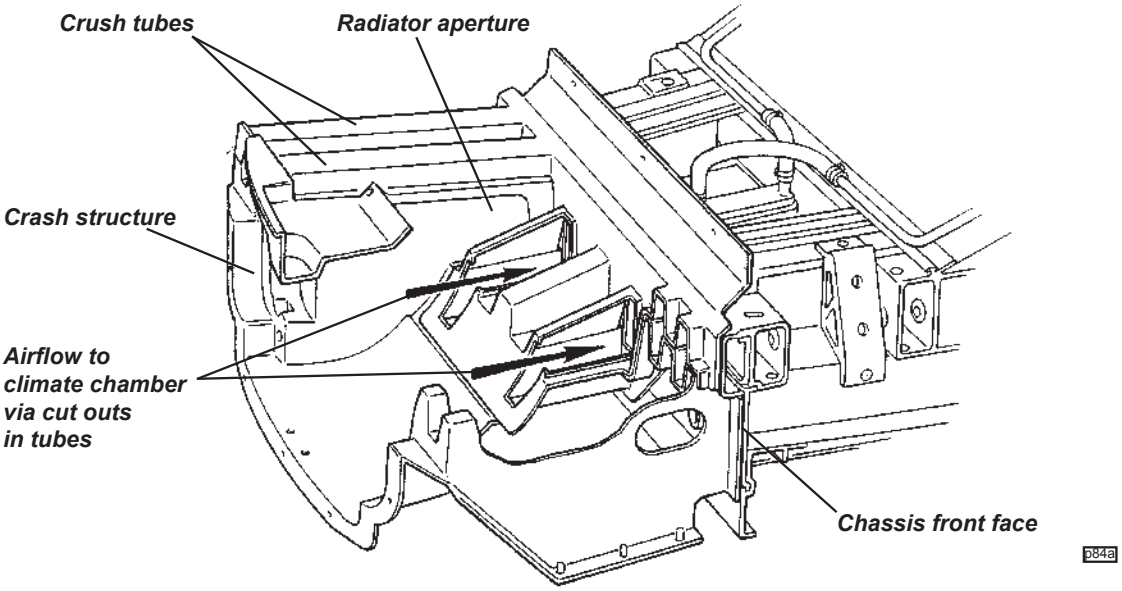

sn_bq_cyclone.indd 10 03/03/2006 10:53:41
Downloaded from www.Manualslib.com manuals search engine

To remove the crash structure:

- Remove the front clamshell (see sub-section BR.5).
- Remove the front undershield by releasing the three screws securing each lower side of the structure to the shield, and the three screws securing the shield to the front lower edge of the chassis.
- Drain the coolant and remove the radiator and pipework (see section KH).
- Remove the driving lamps (if fitted) from the crash structure, along with the towing strut, horn, alarm siren and wiring harness.
- Use a seal cutting knife to cut the bond between the structure and the front face of the chassis. For access to some of the bonding areas, it may be necessary to cut away some parts of the structure, rendering the unit unsuitable for refitment. Take care not to damage the surface of the chassis when cutting the adhesive.
  It is not necessary to remove all traces of old adhesive from the chassis, but a uniform surface must be available for the new adhesive bead. The remaining adhesive must be securely bonded and be cut with a scalpal blade to leave an even thickness of 1 - 2 mm.

Prepare the new structure for bonding:

- Dry fit the new structure to the chassis, and check that a good fit is achieved. Fettle the structure or remove old adhesive as necessary until the fit is satisfactory.
- Re-activate the surface of the old adhesive on the chassis using Betawipe 4000 (see sub-section BQ.5), and clean and prime the bonding area on the new crash structure using Betaclean 3900 and Betaprime 5404 (see sub-section BQ.5).

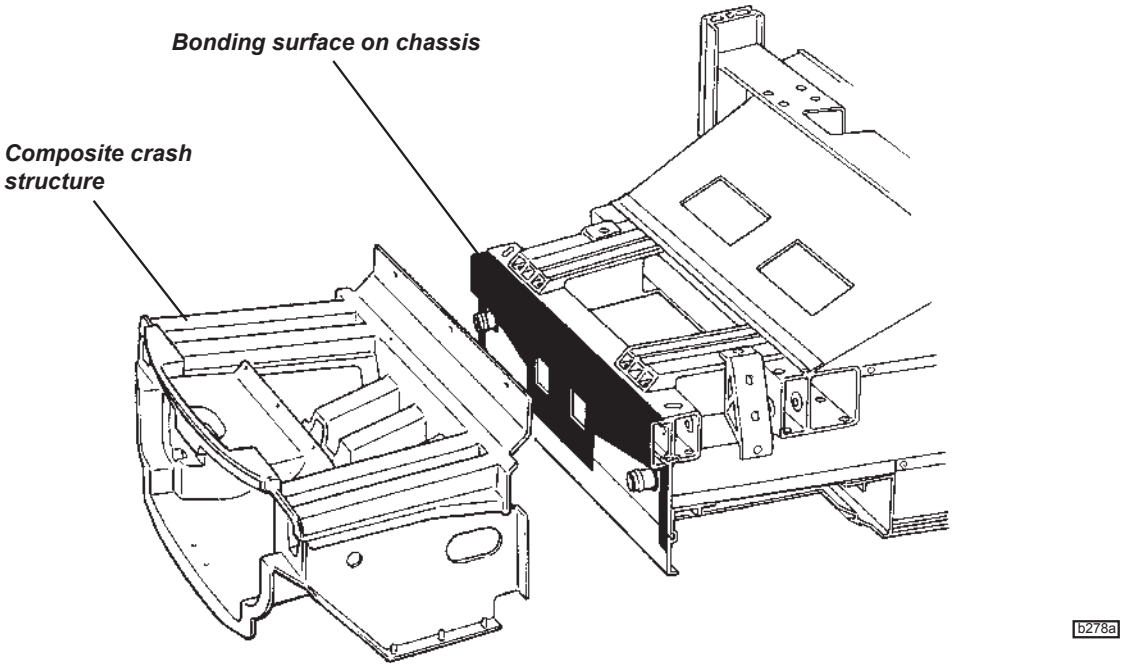

sn_bq_cyclone.indd 11 03/03/2006 10:53:41
Downloaded from www.Manualslib.com manuals search engine

Application of adhesive bead

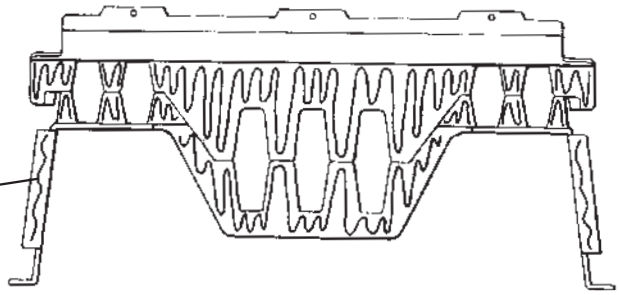

- Apply a bead of Betaseal/mate adhesive (see sub-section BQ.5) to the bonding surface in the manner shown.
- Fit the structure to the chassis and press into position to spread the adhesive. Use several clamps around the joint flange to retain the structure until the adhesive has cured; This will take approximately 4 hours dependent on atmospheric conditions, with a longer period required in dry atmospheres.
- Fit the undershield, radiator (see sub-section KH.4), front clamshell (see sub-section BR.5) and remaining parts.

BQ.8 - WINDSCREEN FRAME

The windscreen frame is a single ICSRTM moulding with hollow, foam filled sections, and incorporates a forward extending buttress at each side to brace the frame against the front chassis. A separate dash baffle panel is used to bridge the space between frame underside and chassis scuttle, and provide for the routing of climate control pipework and air ducting, and other services.

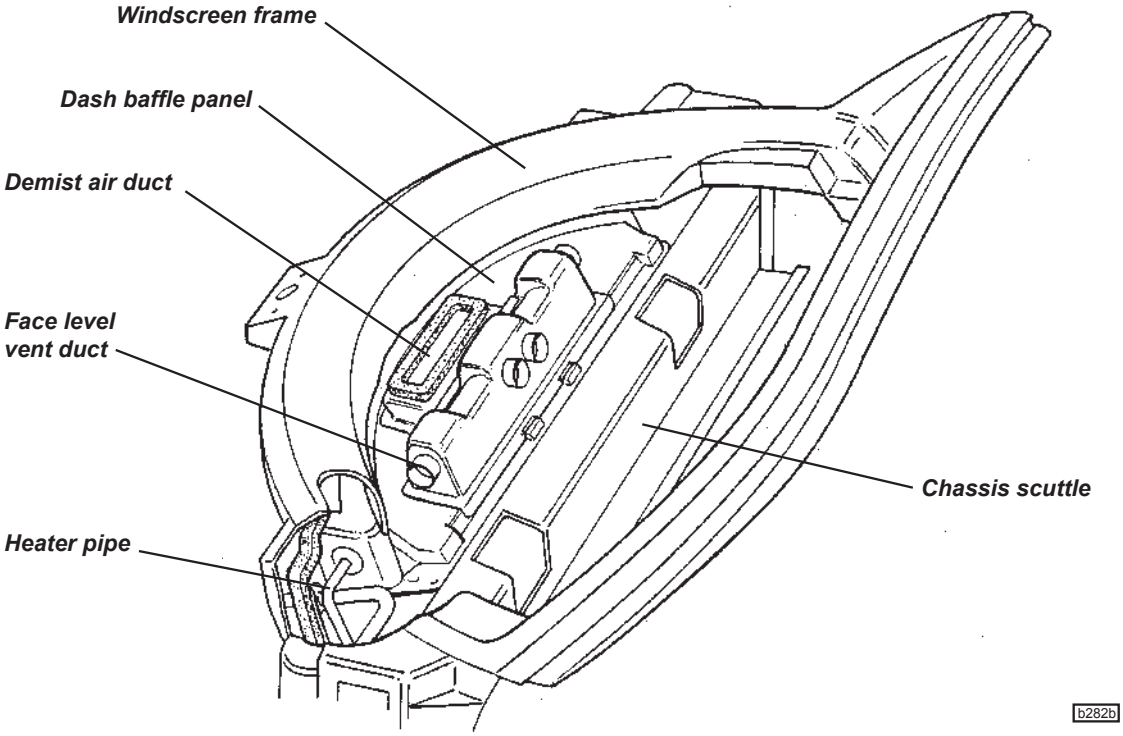

sn_bq_cyclone.indd 12 03/03/2006 10:53:41
Downloaded from www.Manualslib.com manuals search engine

The shape of the frame is critical to the windscreen fit, and structural repairs to the frame itself are not recommended. It is not generally economic to attempt to remove the windscreen frame intact for refitment, as the elastomeric adhesive bonding the frame to the chassis requires cutting with a reciprocating knife, and access to the joints is sometimes obscured. The recommended procedure is to cut the frame as necessary to allow its removal without damage to the dash baffle panel. If the sills are to remain fitted, it will be necessary to carry out some minor work on the screen buttress to sill panel joint, where a panel overlap occurs.

To Replace Windscreen Frame

1. Remove the front wheelarch liners and front clamshell (see sub-section BR.5), and for improved access, the two doors.

2. Remove the windscreen (see sub-section BR.14).

3. Remove the instrument binnacle and fascia top panel (see sub-section BR.13), and release the fixings between dash upper extrusion and screen frame.

4. Release the brake hose/pipe connector at the front end of each buttress on the windscreen frame. Release all harnesses and other components from the windscreen frame buttresses as necessary.

5. Remove the wiper motor mechanism from the windscreen frame.

6. Use a sealant cutting tool to cut the bond between the windscreen frame buttresses and chassis, and between the frame and 'B' posts, and between the frame underside and dash baffle panel. Remove the windscreen frame.

7. Cut the adhesive securing the drainage gutter around the front of the frame, to allow transfer to the new frame.

8. If the dash baffle panel is to be replaced, the clutch pipe and climate control cables must be released and threaded through the panel before cutting the adhesive.

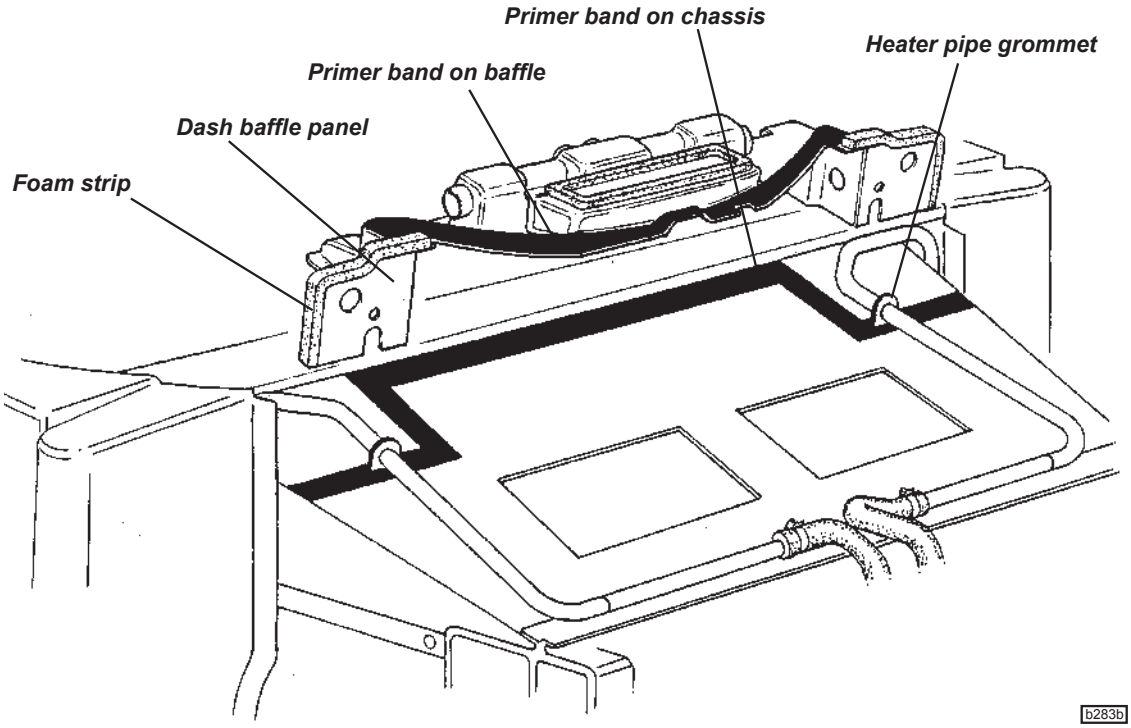

sn_bq_cyclone.indd 13 03/03/2006 10:53:42
Downloaded from www.Manualslib.com manuals search engine

9. To fit a new dash baffle:
   - Ensure the heater feed and return pipes are fitted.
   - Dry fit the panel and mark up the bonding surface on the chassis scuttle.
   - Prepare and re-activate the surface of the old adhesive on the chassis using Betawipe 4000 (see BQ.5).
   - Clean and prime the upper and lower bonding faces on the new baffle panel using Betaclean 3900 and Betaprime 5404 (see sub-section BQ.5).
   - Apply a bead of Betaseal/mate adhesive (see sub-section BQ.5) to the baffle lower flange.
   - Position the panel and press along the length of the joint to ensure sufficient spread of adhesive. Clamp the panel in position until the adhesive cures.
   - Apply self adhesive foam strip A082U6065V to each vertical end face of the baffle panel, wrapping over onto the top edge and along to the primed surface. Apply a second strip up each vertical face.

10. Prepare the old adhesive bead on the chassis for fitment of the windscreen frame by removing excess sealant from all the bonding areas on the chassis, sill panels and dash baffle to leave a consistent and level bonding surface for the new frame. It is not necessary to remove all traces of old adhesive, but a uniform surface must be available for the new adhesive bead. The remaining adhesive must be securely bonded and be cut with a scalpal blade to leave an even thickness of 1 - 2 mm.

11. Fit the wiper motor assembly and windscreen washer jets to the windscreen frame.

12. If necessary, fit a new roof side rail latch plate to the windscreen header rail - it is not recommended to refit a bracket due to the requirement for high surface quality on the bracket.
    - If applicable, completely remove any old adhesive from the header rail taking care not to damage the composite substrate. Lightly abrade the bonding surface on the header rail but do ***not*** abrade the bracket.
    - Clean the bonding surfaces on the header rail and bracket with Betaclean 3900 (see sub-section BQ.5).
    - Prime the header rail with Betaprime 5404, but do not prime the bracket.
    - Generously coat the bonding surface of the bracket, with a 50/50 mix of Betamate 7064S (A116B0159V) and Betamate 7014 (A116B0158V). Fit the bracket to the header rail and wipe off extruded adhesive with Betaclean 3900. Position the bracket using tool T000T1422F (RH) or T000T1423F (LH), which sould be taped to the header rail for at least 30 minutes.

13. Before fitting the windscreen frame, ensure that two setting rods are available for positioning the frame:
    - Cut two 670mm lengths of locally sourced 10mm diameter steel rod.

14. - Prepare and re-activate the old adhesive bead on the chassis using Betawipe 4000 (see BQ.5).
    - Clean and prime the bonding area on the new windscreen frame with Betaclean 3900 and Betaprime 5404 (see sub-section BQ.5).
    - Apply a bead of Betaseal/mate adhesive (see sub-section BQ.5) to the whole of the bonding flange on the windscreen frame and butresses, including the mating face between frame underside and baffle panel.
    - Carefully fit the windscreen frame onto the chassis and press into position to ensure adequate adhesive compression. Ensure the frame is positioned correctly in relation to the roll-over bar by fitting the two setting rods in the roof siderail locating slots. The rods should locate snugly in the slots with no end play.
    - Clamp the frame into position until the adhesive cures.
    - Ensure good adhesion between the frame and baffle panel.
    - Use a spatula to smooth out or remove any excess or extruded adhesive.

15. Seal the frame panel to the top of the door hinge post at each side by extruding a bead of Betaseal, and smoothing with a spatula to obtain a neat finish.

16. Examine the whole of the bonding jointline for sealing integrity, and if necessary apply additional adhesive to seal any gaps. Use a spatula to smooth any visual areas to a neat finish.

17. Do not disturb the frame until the adhesive has fully cured (see sub-section BQ.5).

18. Fit the windscreen (see sub-section BR.14), dash panel and instrument pack (BR.13), front clamshell (BR.5), and other components as necessary.

sn_bq_cyclone.indd 14 03/03/2006 10:53:42
Downloaded from www.Manualslib.com manuals search engine

Windscreen frame bonding (sills not shown)

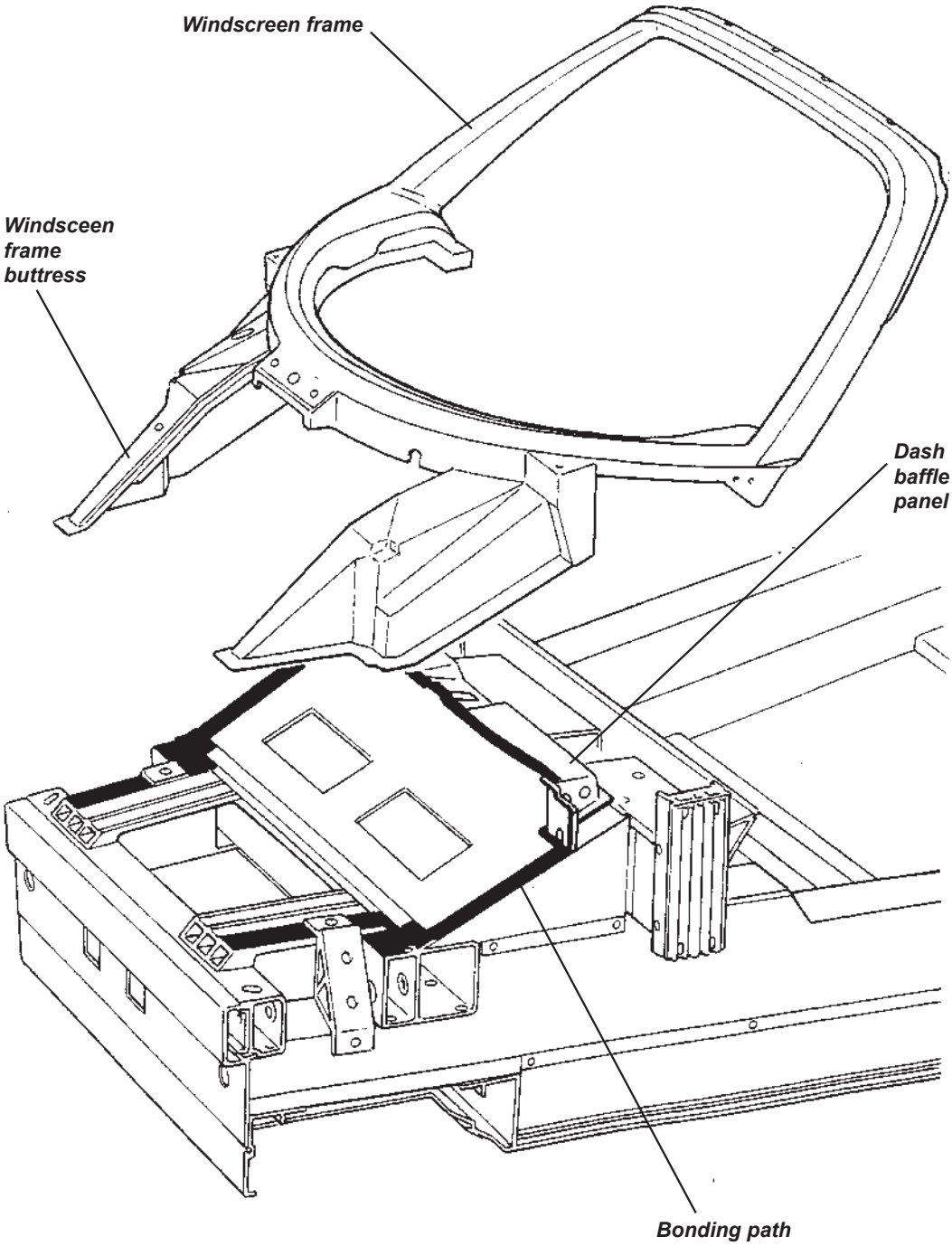

b281a

sn_bq_cyclone.indd 15 03/03/2006 10:53:42
Downloaded from www.Manualslib.com manuals search engine

BQ.9 - SILL PANELS

The sill panels incorporate the 'A' and 'B' posts, and are bonded to the chassis, windscreen frame and rear bulkhead panel. The sill bottom flange, and rear end of the will top flange are bonded into grooves in the chassis main side rails and it is necessary to cut the sills in the course of their removal: It is not practical to attempt to remove a sill panel intact for later refitment. If sill damage occurs which is not repairable 'in situ', the sill panel should be renewed.

To Replace Sill Panel

A short section of sill flange underlaps the windscreen frame buttress flange in the front wheelarch area and requires that some cutting and laminating of the new panel is required on assembly.

1. Remove front and rear clamshells (see sub-sections BR.5, BR.6), dash panel (BR.13) and door hinge bracket (BR.8).

2. Remove the door latch striker pin and washers, noting the assembly sequence. Remove the door sill trim panel from the chassis and the door ajar switch from the sill panel.

3. Use a sealant cutting knife to cut the adhesive bead between sill and chassis/body panels.
   Note:
   - In the front wheelarch area, a short section of the sill flange underlaps the windscreen frame buttress flange. Unless the windscreen is also to be removed, it will be necessary to cut the sill around this flange in order to release the sill.
   - The bottom edge of the sill, and the rear part of the top edge, locate in grooves in the chassis side frame, and may not readily be cut out with the sill intact. Cut the sill as necessary to release the panel, and then remove the remaining edges of the panel from the chassis using a suitable cutting knife.
   - Cut the sealant around the door hinge post aperture.
   - Cut the sealant between the panel and roll over bar.

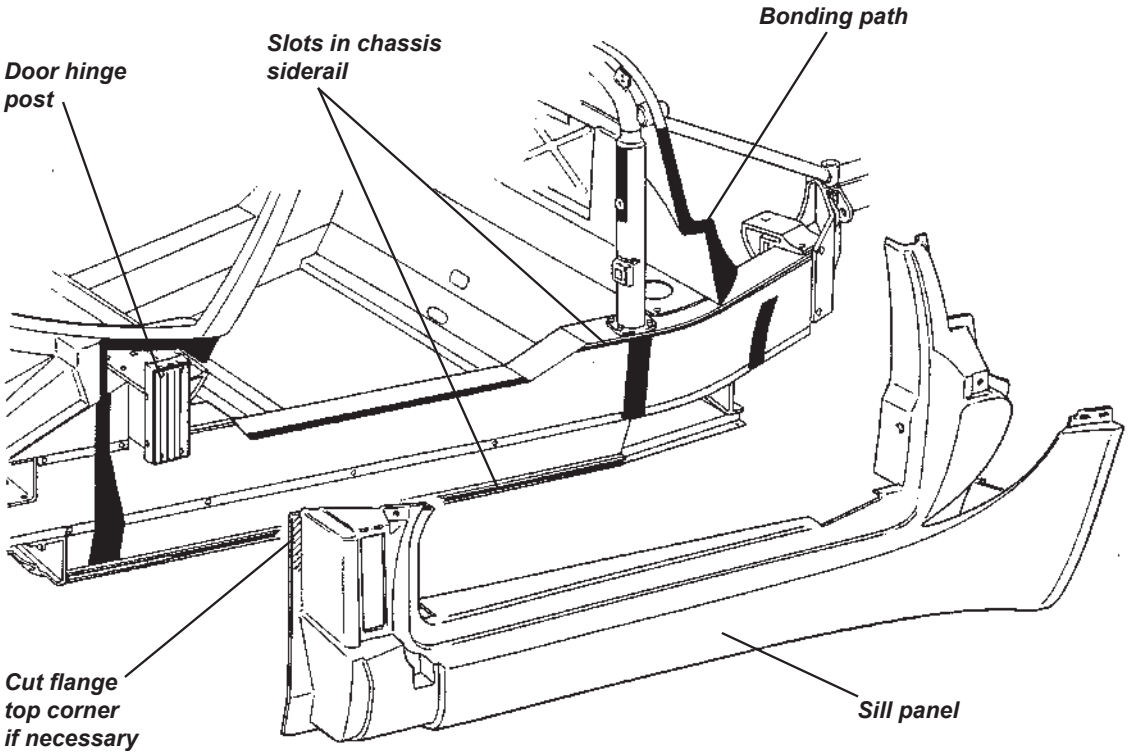

bj47a

sn_bq_cyclone.indd 16 03/03/2006 10:53:43
Downloaded from www.Manualslib.com manuals search engine

4. Remove excess sealant from all the bonding areas on the chassis and body panels. It is not necessary to remove all traces of old adhesive, but any remaining adhesive must be securely bonded and be cut with a scalpal blade to leave an even thickness of 1 - 2 mm.

5. If necessary, cut the top front corner of the sill flange to allow mating of the panel around the windscreen butress flange. Dry fit the sill and fettle as necessary to achieve a good fit. Note that a new sill will require an alloy right angle bracket (A120B0053F) riveting to the rear end of the sill panel to form a bonding surface. Holes are pre-drilled, with two pairs of holes in the bracket to suit Rover and Toyota powertrain cars. For Toyota powertrain cars, use the innermost holes in the bracket to pull the sill panel furthest inboard.

6. Before preparing the surfaces for bonding, ensure that the necessary pipes and cables are fitted to the chassis side rails:
   RH side: - heater feed pipe
   - brake pipe
   - alloy spigot for side impact foam
   LH side: - heater return pipe
   - brake pipe
   - clutch pipe
   - servo vacuum hose
   - main battery positive cable
   - alloy spigot for side impact foam

   Check that the following components are fitted into the composite sill:
   RH side: - 2 a.c. pipes (if applicable)
   - oil cooler return hose (if applicable)
   - side impact foam
   - foam baffle
   LH side: - oil cooler feed hose (if applicable)
   - side impact foam
   - foam baffle

7. Prepare the bonding surface of the new sill panel with Betaclean 3900 and Betaprime 5404 (see subsection BQ.5). Prepare surface of the old adhesive bead on the chassis and body panels Using Betawipe 4000 (see sub-section BQ.5).

8. Apply a bead of Betaseal/mate adhesive (see sub-section BQ.5) to the bonding surface on the chassis and body and fit the sill panel into position, first locating the sill bottom edge into its chassis slot, and press all around the joint to ensure sufficient spread of adhesive. If necessary, use a spatula to smooth or remove any extruded adhesive, and to neaten any visual areas. If necessary, add adhesive to the joint around the door hinge post, and to the windscreen frame, and smooth with a spatula.

9. Clamp the panel into position until the adhesive has cured (see sub-section BQ.5).

10. If the top front corner of the sill flange has been cut to fit around the windscreen butress flange, this area should be reinforced as follows: Roughen the surface of the windscreen buttress flange and the adjacent sill panel in the modified area, and lay up two pieces of chopped strand mat across the joint.

11. Refit the dash panel, front and rear clamshells, doors, both wheelarch liners and other components as necessary.

BQ.10 - REAR BULKHEAD

The rear bulkhead is a Polyurethane Structural Reaction Injection Moulding (PU SRIM), incorporates the rear window surround, and is bonded to the roll over bar and chassis fuel tank bay. A heat formed polyester fibre heat/acoustic insulator panel is bonded to the rear side of the panel, and incorporates a glass fibre aluminised cloth heat reflector shield in the vicinity of the exhaust manifold. The rear window is bonded directly to the bulkhead using the same materials and procedure as is used for the windscreen.

sn_bq_cyclone.indd 17 03/03/2006 10:53:43
Downloaded from www.Manualslib.com manuals search engine

To replace the rear bulkhead:

1. Remove the rear clamshell (see sub-section BR.6).

2. Remove both seats, and the bulkhead interior trim panel.

3. Remove from the inside of the bulkhead the microwave sensor and immobiliser module. Release all wiring harnesses from the bulkhead clips.

4. Release all fittings from the roll-over bar backstays (air cleaner, roll over valve) and remove both backstays.

5. Taking suitable precautions, remove the fuel filler hose and filler breather hose, and cap the tank apertures to prevent dirt ingress and reduce fire risk.

6. Release the evaporative emissions charcoal canister and fuel filter from their bulkhead mounting brackets.

7. Release the aerial lead from the bulkhead.

8. Using a long knife, cut the adhesive securing the insulator panel to the bulkhead, and remove the panel to improve access to the bulkhead bonded joint.

9. Using a sealant cutting knife, cut the adhesive bead between the top section of the bulkhead and the roll over bar, and between the bottom of the bulkhead and the chassis. If the sill panels are fitted, cut the bond between sill panel 'B' posts and the bulkhead panel.

10. Manoeuvre the bulkhead from the car.

<u>To Fit Bulkhead Panel</u>

Before fitting a bulkhead panel, ensure that the following parts are bonded to the panel:
- Header tank mounting bracket;
- Charcoal canister mounting bracket;
- Immobiliser module stud plate;
- Fuel filter mounting bracket;
- Rear window glass;

All the above components are bonded using elastomeric adhesive applied as follows. Refer also to sub-section BQ.5:
Brackets & Studplates: Clean the bonding surfaces on the bracket and bulkhead with Betaclean 3900 (black cap) and prime both surfaces with Betaprime 5404 (red cap). Apply Betaseal 1701 adhesive to the bracket, and clamp in position until the adhesive has cured.
Rear Window: Clean the whole of the bonding surface on the glass with Betawipe VP 04604 (yellow cap), and prime with Betaprime 5001 (green cap). Clean the corresponding surface on the bulkhead with Betaclean 3900 (black cap) and prime with Betaprime 5404 (red cap). Apply a bead of Betaseal 1701 to the periphery of the glass, and press into position on the bulkhead to ensure sufficient compression of the adhesive. Use a spatula to remove excess extruded adhesive and smooth any visual areas. Tape the glass into place if necessary to retain position until the adhesive cures.

Bonding of Bulkhead Panel: Clean the mating surfaces of bulkhead, roll over bar and (if fitted) sill 'B' posts, with Betaclean 3900 (black cap) and prime with Betaprime 5404 (red cap). Or, where applicable, use Betawipe 4000 to re-activate old adhesive (refer to sub-section BO.5). Clean the mating surface on the chassis with Betawipe VP 04604 (yellow cap), and prime with Betaprime 5404 (red cap). Apply a bead of Betaseal 1701 to the bonding path on the bulkhead, and manoeuvre into postion, pressing all round the joint path to ensure sufficient compression of the adhesive. Use a spatula to remove excess extruded adhesive and smooth any

sn_bq_cyclone.indd 18 03/03/2006 10:53:43
Downloaded from www.Manualslib.com manuals search engine

visual areas. Secure in position with tape until the adhesive has cured.

The heat/acoustic insulator panel is bonded to the bulkhead only at its centre section. Clean and prime the centre section on the bulkhead with Betaclean 3900 and Betaprime 5404, and apply Betaseal 1701. Press the insulator panel into position and ensure sufficient compression of adhesive. Tape in place until the adhesive has cured.

Refit remaining components in reverse order to removal.

sn_bq_cyclone.indd 19 03/03/2006 10:53:43
Downloaded from www.Manualslib.com manuals search engine

BODY FITTINGS

SECTION BR

	Sub-Section	Page
Removable Roof	BR.1	2
Rear Window Shroud (Elise only)	BR.2	6
Front Body Access Panels	BR.3	7
Engine Cover Lid	BR.4	7
Door Hinge Cover Panel	BR.5	9
Front Clamshell	BR.6	9
Rear Clamshell	BR.7	11
Door Mirrors	BR.8	12
Door Shell Brackets	BR.8a	12a
Door Beam & Hinge	BR.9	13
Door Shell Assembly	BR.10	15
Door Glass, Guide Rails & Winder Mechanism	BR.11	16
Electric Windows	BR.12	20
Door Seals	BR.13	22
Door Latch Mechanism (without CDL)	BR.14	23
Central Door Locking	BR.15	26
Instrument Binnacle & Dash Panel	BR.16	27
Windscreen	BR.17	32

Downloaded from www.Manualslib.com manuals search engine

BR.1 - REMOVABLE ROOF

The Lotus Elise has been designed to exploit the pleasures of open top motoring, the better to enjoy exposure to the natural environment, unencumbered by the restrictions and confinement bestowed by a cockpit roof. In order to provide some weather protection to the occupants and vehicle interior, and allow the continued enjoyment of the car in unfavourable weather conditions, a simple hard or soft top roof may be fitted.

Due to the constantly changing dynamic and wind pressure loadings to which the roof structure is subject when driving, and the tolerances required to allow for repeated removal and refitting of the roof, complete weather sealing of the roof cannot be guaranteed, such that some wind noise and minor water leaks are considered normal for this model. The Elise or Exige should not be subjected to an automatic car wash. Such machines can induce water leaks caused by high pressure water jets which are not representative of conditions encountered during normal use. The brushes used may also damage the fabric of the soft top roof.

Exige Hardtop Roof:

The Lotus Exige has been conceived and configured as a sports coupé with a removable roof. The aerodynamic performance of the bodyshell including the front spoiler, rear aerofoil, roof panel and tailgate have been tuned to provide the optimum handling balance with the roof scoop on supercharged cars providing the cooling airflow for the chargecooler.

The roof panel may be removed for better access to the interior for servicing, and the car may be driven without the roof fitted, but wind buffeting and increased noise levels will be experienced together with a slight decrease in maximum power on supercharged cars.

Soft Top Roof

A hollow composite roof siderail is used on each side of the car to bridge each top corner of the windscreen frame to the roll over bar, and provide a mounting for a weatherstip seal, against which the top edge of the door glass abuts. The soft top roof canopy is fixed to each siderail, which uses a spigot pin at the front and rear to engage with a slot in a latch plate on the header rail and roll over bar. A second, spring loaded spigot pin at each end of the siderails, is arranged to slide into a ramped hole on the latch plates and secure and tension the soft top via steel cables running through the front and rear of the roof canopy.

Soft Top - Fitting

WARNING: The soft top roof should be fitted only whilst the vehicle is safely parked.

1. From its stowage bag in the rear luggage compartment, withdraw the roof assembly and support stays. Lower both door windows, or open both doors.

2. Insert the two, identical, roof support stays, with the arrows pointing forwards, into the slots above the rear window, and in the windscreen header rail. Note that the slots are keyed to prevent the stays being fitted the wrong way round.

3. Lay the soft top roof across the centre of the roof space with the arrows on the side rails pointing forwards.

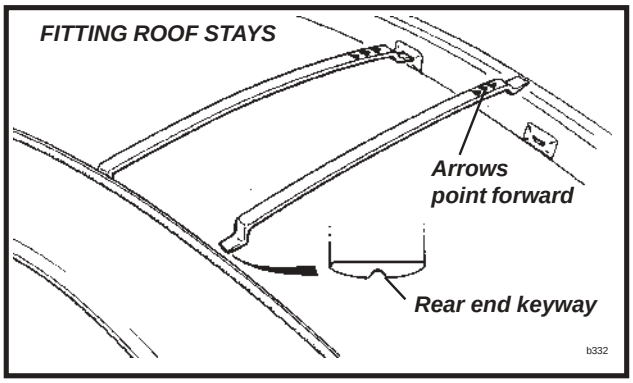

Downloaded from www.Manualslib.com manuals search engine

4. Roll out the **left hand** side of the roof, and engage the fixed spigot pin on the front and rear end of the rail, into the uppermost slot in the latch blocks at the front and rear of the roof aperture.

5. Ensure that the tensioning cables at the front and rear edges of the roof canopy are correctly located in the channels between the seal and body before rotating the left hand side rail downwards.
Ensure that both spring loaded pins 'click' into their ramped slots indicating that latching is complete. If necessary, ease the latch handles on the inside face of the side rails inwards to facilitate latching. Pull up on the side rail to check security.

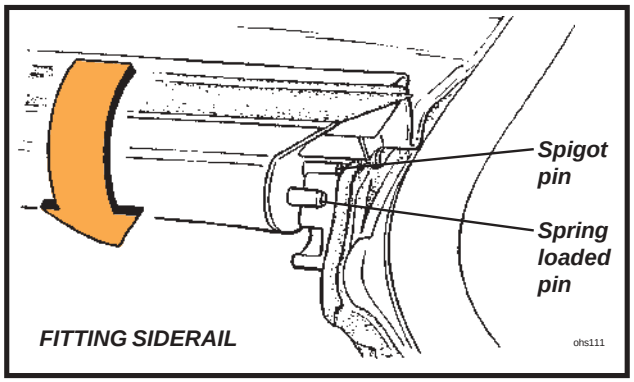

FITTING SIDERAIL

6. On the **right hand** side of the car, repeat steps (4) and (5) for the second side rail, noting that greater rotating force will be required as tension is applied to the canopy.
Note: Engaging the left hand roof side rail first, will minimise the possibility of the canopy tensioning cable adjusters causing damage to the roof seals.

Soft Top - Removal

WARNING: The soft top roof should be removed only whilst the vehicle is safely parked.

1. Open both doors or lower both door windows.

2. On the inside face of the **right hand** roof side rail, locate the two latch release levers: Pull the two lever handles towards each other to release the side rail latches (press down on the side rail if necessary to relieve the load on the latch pins), and rotate the rail upwards to release the canopy tension.

3. Repeat step (2) for the **left hand** side rail.
Note: Releasing the right hand roof side rail first, will minimise the possibility of the canopy tensioning cable adjusters causing damage to the roof seals.

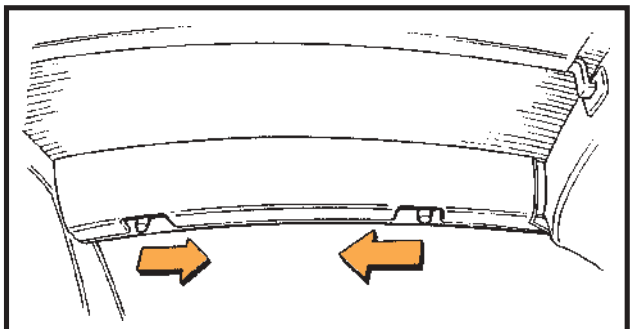

RELEASING ROOF SIDE RAIL

4. Carefully roll up each side of the roof canopy towards the centre, lift off the car, and stow in the roof bag.

5. Unhook the two roof stays and stow in the roof bag.

Important Note: If the roof is not fully dry, it should be stowed for no longer than a few days before unrolling or refitting and allowing to air dry completely. Prolonged stowage of a wet or damp roof will promote rotting of the fabric.

Roof Cable - Front: The tension of the steel cable running through the front edge of the roof canopy should be adjusted with the side rails latched. Hook a spring balance under the centre of the cable, and apply an upwards force of 6 kgf. Adjust the cable tension to achieve a vertical gap of 6mm between the cable and top surface of the windscreen surround.

Downloaded from www.Manualslib.com manuals search engine

Roof Cable - Rear: The roof rear cable tension should be sufficient only to maintain stability of the roof canopy shape.
Side Rail Front Latch Plates: The latch plates on the windscreen header rail are secured using a two part adhesive. If necessary, use Betaclean 3900 (A100B6008V), Betaprime 5404 (A082B6337V), and a 50/50 mix of two part adhesive Betamate 7064S (A116B0159V) and Betamate 7014 (A116B0158V) to refix.

Hard Top Roof

Note

- The hard top roof has been designed to provide a seasonal, rather than single trip option. Some owners may prefer to entrust the fitting and removal of the hard top roof to their dealer.
- When stowing the roof off the car, care should be taken to avoid damage to the roof corners; e.g. use a suitable soft floor covering on which to stand the roof.
- Fitment or removal of the hardtop is made considerably easier with the assistance of a second person.
- Use only the 'Torx' tool supplied in the vehicle tool kit to tighten or release the roof fixing screws.
- The hardtop roof fixings are made captive to the roof to prevent their loss.

Hard Top - Fitting

WARNING: The hard top roof should be fitted only whilst the vehicle is safely parked.

1. Open both doors, and preferably with the aid of an assistant, lower the roof onto the car holding aside the loose tethered fixings to avoid their entrapment or their causing paint damage. Position the rear edge of the roof first before locating the front edge against the windscreen header rail.

2. Locate a front spigot bracket into its latch plate lower slot (lifting the roof slightly to allow this) and retain to the roof with the Torx bolt. Use only the special tool supplied, and do not fully tighten at this stage.

3. Repeat step (2) for the opposite front spigot bracket.

4. Engage a rear cup bracket with the lower tongue on its rear latch plate, and retain to the roof with the Torx bolt. Use only the special tool supplied, and do not fully tighten at this stage. Ensure that the cup is fully located onto the tongue.

5. Repeat step (4) for the opposite rear cup bracket.

6. Push the roof fully forwards before tightening the front spigot brackets using only the special tool supplied. Hold each rear cup bracket in alignment whilst tightening the single fixing screw for each bracket. Do not overtighten.

7. Fit the cover panels to each rear corner of the roof, noting that the panels are handed for left and right sides. Press the panels firmly into position fully to engage the 'Velcro' fixing patches.

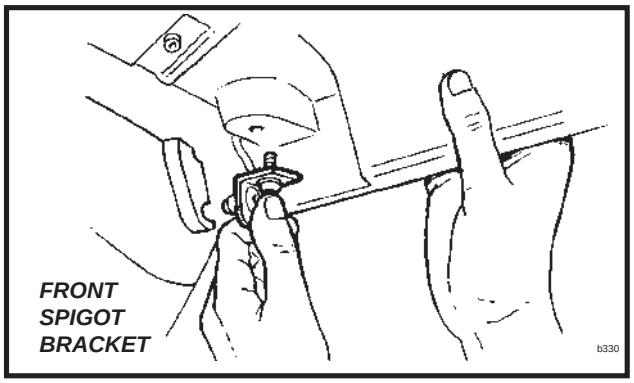

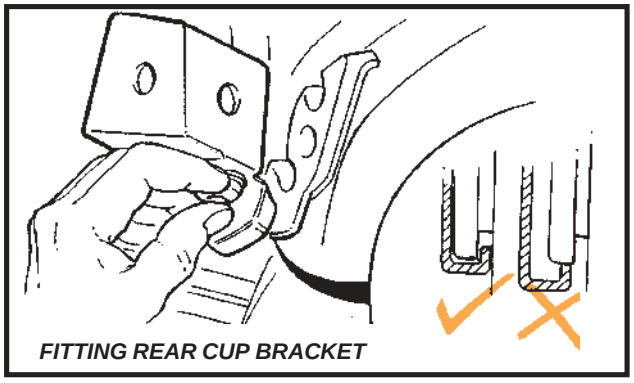

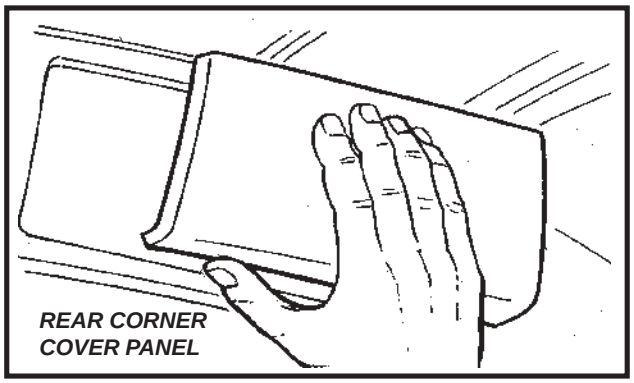

Downloaded from www.Manualslib.com manuals search engine

8. Using the special tool provided, install the windscreen header cover panel by locating first with the central screw, and then by the outer screws before tightening in the same order.

9. Check that the roof is secure by pulling upwards on each corner in turn. If any upward movement is evident, check the correct fitment of all mounting brackets.

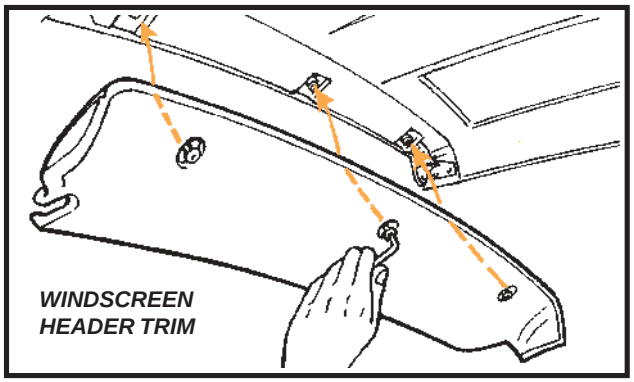

Hard Top - Removal

WARNING: The hard top roof should be removed only whilst the vehicle is safely parked.

1. Open both doors.

2. Using the special tool supplied, release the three Torx screws securing the windscreen header trim panel, and remove the panel.

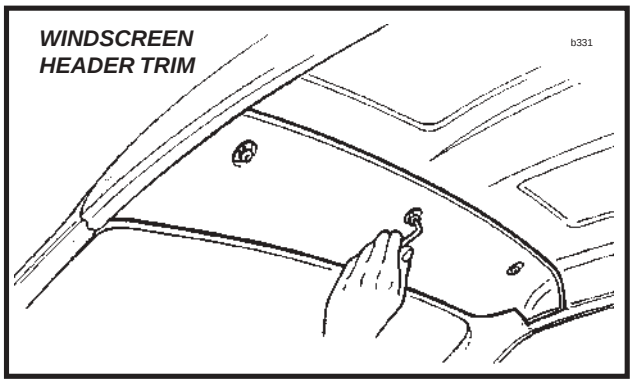

3. Using the special tool supplied, slacken the Torx screw securing each front corner spigot bracket to the roof, but do not yet remove the screws.

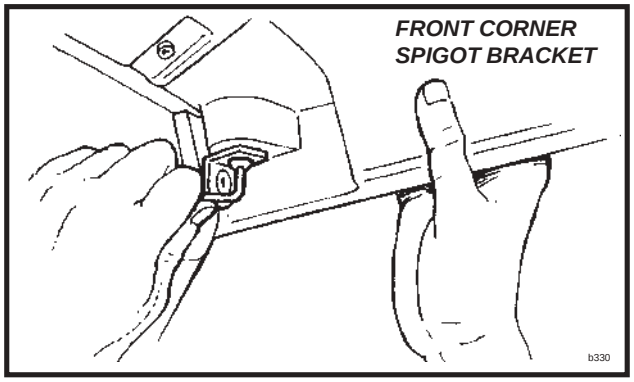

4. Pull off the trim cover from each rear corner of the roof panel and remove the screw securing the hook bracket to the latch plate at each rear corner.

5. Remove the two front corner bracket fixing screws and lift the front edge of the roof slightly to release the front brackets from their latch plate slots.

6. With the aid of an assistant, lift the roof from the car taking care to restrain the tethered brackets to avoid damaging the paintwork.

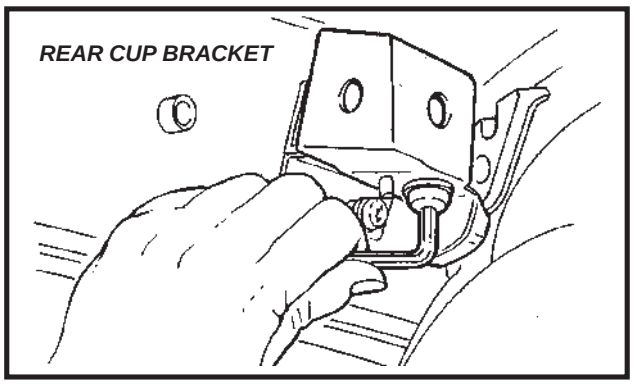

7. If storing the roof vertically, take care to avoid damaging the panel corners by using a protective floor covering.

Downloaded from www.Manualslib.com manuals search engine

BR.2 - REAR WINDOW SHROUD (Elise only)

The rear window shroud is a body colour composite panel which covers the seat belt mounting frame/roof hoop, and forms a capping for the rear of the cockpit. The panel is secured by two brackets on its front edge which are fixed each side by a single M6 screw to the top of the rear bulkhead panel and which are accessible from within the cabin. On some cars it may be necessary first to remove a trim panel secured by five screws. Note that Neoprene washers are used between the brackets and the bulhead.

Each rear leg of the shroud is fitted with a captive M6 stud, which locates through a hole in the clamshell buttress, with the retaining nut accessible either from the engine bay, or wheelarch area. A foam gasket is used to prevent chafing damage between the shroud and clamshell.

When removing the shroud, it is also necessary to peel off the rear weatherstrip from the front edge of the panel, and to remove the two cant rail latch plates from their brackets on the roof hoop.

Note that on the Exige, the rear window shroud is an integral part of the rear clamshell moulding.

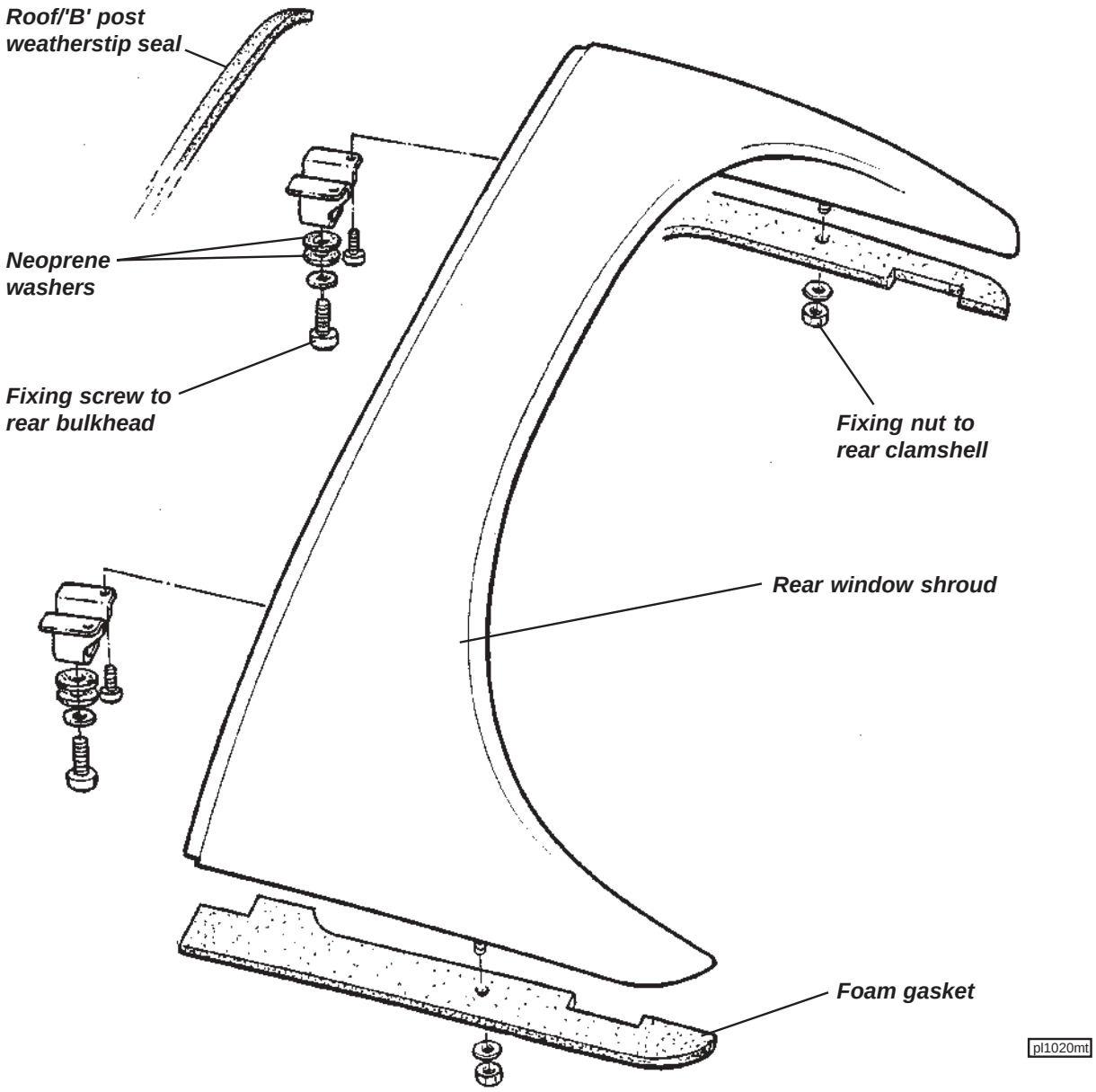

Downloaded from www.Manualslib.com manuals search engine

BR.3 - FRONT BODY ACCESS PANELS

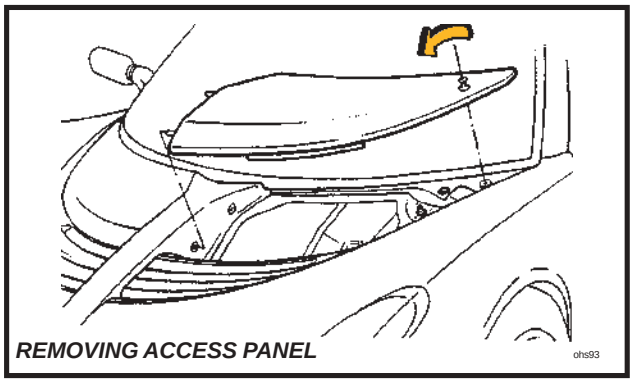

REMOVING ACCESS PANEL

Elise

Two removeable, body colour composite panels are provided in the front body to allow access to the front fusebox and brake fluid reservoir.

To remove an access panel: Use the hexagonal key supplied in the vehicle tool kit (in the battery cover rear pocket), to release the single threaded fastener securing the outboard corner of the panel, and withdraw the panel from the two locating holes in the front body spine. Guard against the lightweight panel being blown away and damaged by a strong wind.

To refit a panel: Hook the extended lip on the front edge of the panel beneath the rear edge of the louvre panel before engaging the two locating pegs on the inboard side of the access panel with the grommeted holes in the front body spine. Fit the single screw at the outboard corner of the panel into the captive nut in the body, taking care not to cross-thread or overtighten the screw. Re-stow the hexagonal key in the tool kit.

Note that the outboard fastener uses a mounting plinth adjustable in height to allow optimum panel alignment to be achieved.

WARNING: Ensure the access panels are refitted and properly secured before driving.

Exige

The access panels on the Exige model are shorter front to back than those of the Elise, and are retained by three socket head screws, the outermost of which features an adjustable plinth to allow panel height adjustment.

BR.4 - ENGINE COVER LID

Elise

The engine cover/boot lid is moulded from glass fibre composite and incorporates 4 engine cooling outlet grilles secured by double sided tape and plastic rivets into recessed apertures. Two hinges are used to attach the lid to the rear bulkhead, with stud plates fixing the hinges to the bulkhead from the engine bay side, and the nuts accessible from the cabin after removal of the rear bulkhead trim panel. A single, key operated latch mechanism secures the lid to a striker pin mounted on the clamshell engine/boot bulkhead. The latch is released by inserting the ignition key into the lock and turning clockwise, the lock barrel being connected to the latch mechanism by a short link rod. When the latch is released, a spring plunger will lift the lid sufficiently to allow it to be raised fully by hand. Support the lid by inserting the prop provided on the boot bulkhead into the slotted plate adjacent to the latch mechanism. The spring plunger also operates a micro-switch for the alarm system, and is protected from exhaust manifold heat by a steel shield.

When closing the lid, fully engage the latch mechanism by pressing down on the cover only immediately above the latch. Note that the lock mechanism plastic cover plate on the underside of the engine lid, serves also to channel any water ingress from around the lock into the engine bay. Drain holes are provided in the gutter surrounding the engine bay, with a collector and drain tube fitted at the rearmost extremity.

On USA models, an fluorescent emergency internal release handle is fitted on the underside of the lid to facilitate the escape of a trapped child.

To remove the engine cover, release the cover from the two identical hinges. Note that the hinges also serve to clamp the clamshell front edge to the cabin rear bulkhead.

Beware that the engine cover is locked whenever it is closed, and always requires the use of the ignition key to release. Owners should be made aware of the importance of having a spare key available in case of inadvertently locking the keys in the boot.

Downloaded from www.Manualslib.com manuals search engine

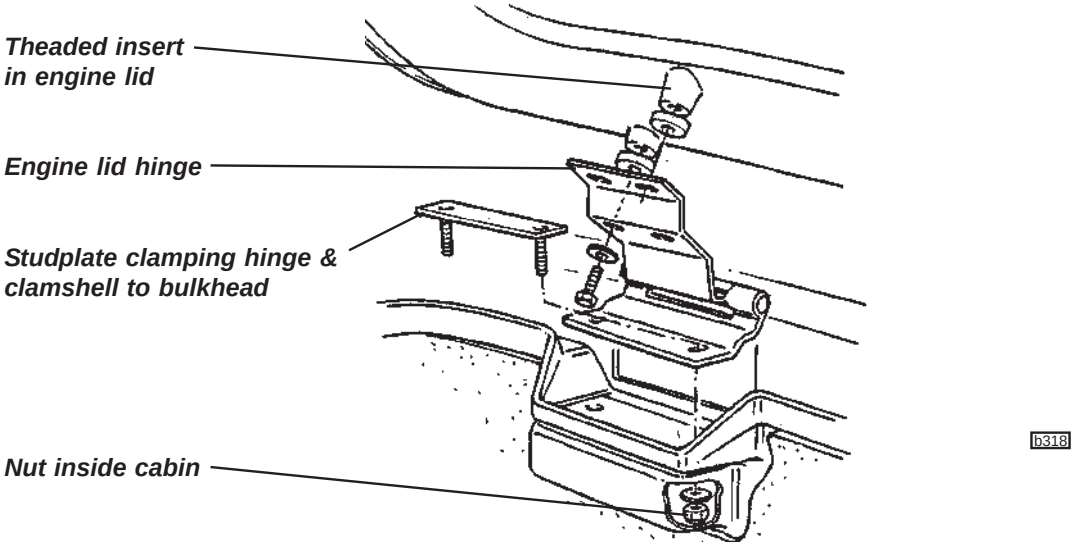

Exige

On Exige models, the double skin, moulded composite tailgate panel, mates with an air intake duct in the clamshell and roof panel to admit cooling air into the engine bay, and also features seven steel mesh grilles to allow for the exhaustion of hot air. The tailgate panel uses extruded alloy hinges at its front edge, anchored to the underside of the clamshell, and is provided with a gas spring strut to support the lid in the fully open position. The latch mechanism is mounted on the boot bulkhead, where it, and an adjacent alarm plunger switch are protected by a steel heat shield. The latch is operated by a cable release from a lever handle mounted outboard of the driver's seat back.

A rear aerofoil with integrally moulded support struts, is secured to the rear end of the tailgate and transfers loads via adjustable abutments into the boot bulkhead and body structure.

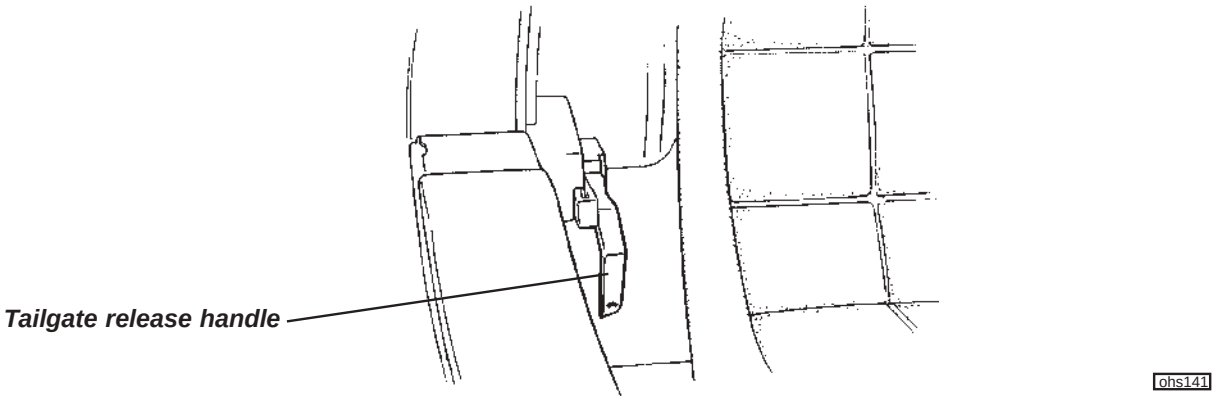

Downloaded from www.Manualslib.com manuals search engine

BR.5 - DOOR HINGE COVER PANEL

A separate glass fibre composite body panel is used to fill the area beween the door and wheelarch, and uses threaded fasteners to attach to the rear of the clamshell, top of the sill and bottom inboard edge of the sill panel.

To remove a door hinge cover panel:

- From beneath the sill, remove the two fixings securing the bottom edge of the hinge panel to the sill.
- Remove the filler panel concealing the fixing securing the hinge cover to the door sill recess, and remove the fixing.
- Remove the wheelarch liner and remove the single screw securing the door hinge cover panel to the clamshell.
- Release the repeater lamp harness and withdraw the panel.

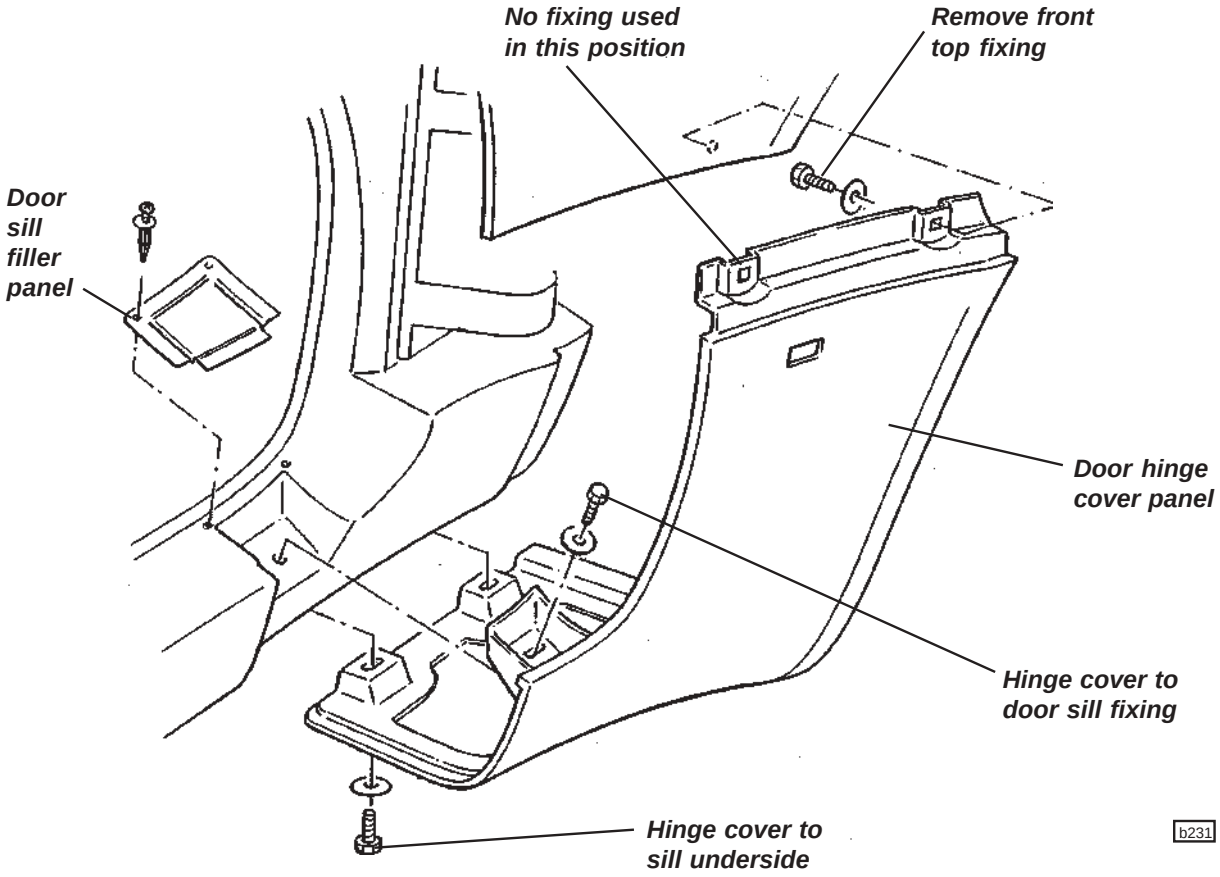

BR.6 - FRONT CLAMSHELL

The front clamshell is a bonded assembly of several glass fibre composite mouldings incorporating both front wings, the front access aperture, radiator air intake and headlamp housings. The clamshell is secured to the windscreen frame, radiator mounting panel and other panels using threaded fasteners for ease of removal and to facilitate service access and body repair.

To Remove Front Clamshell

1. Remove both front body access panels.

2. Remove both front wheelarch liners;

Downloaded from www.Manualslib.com manuals search engine

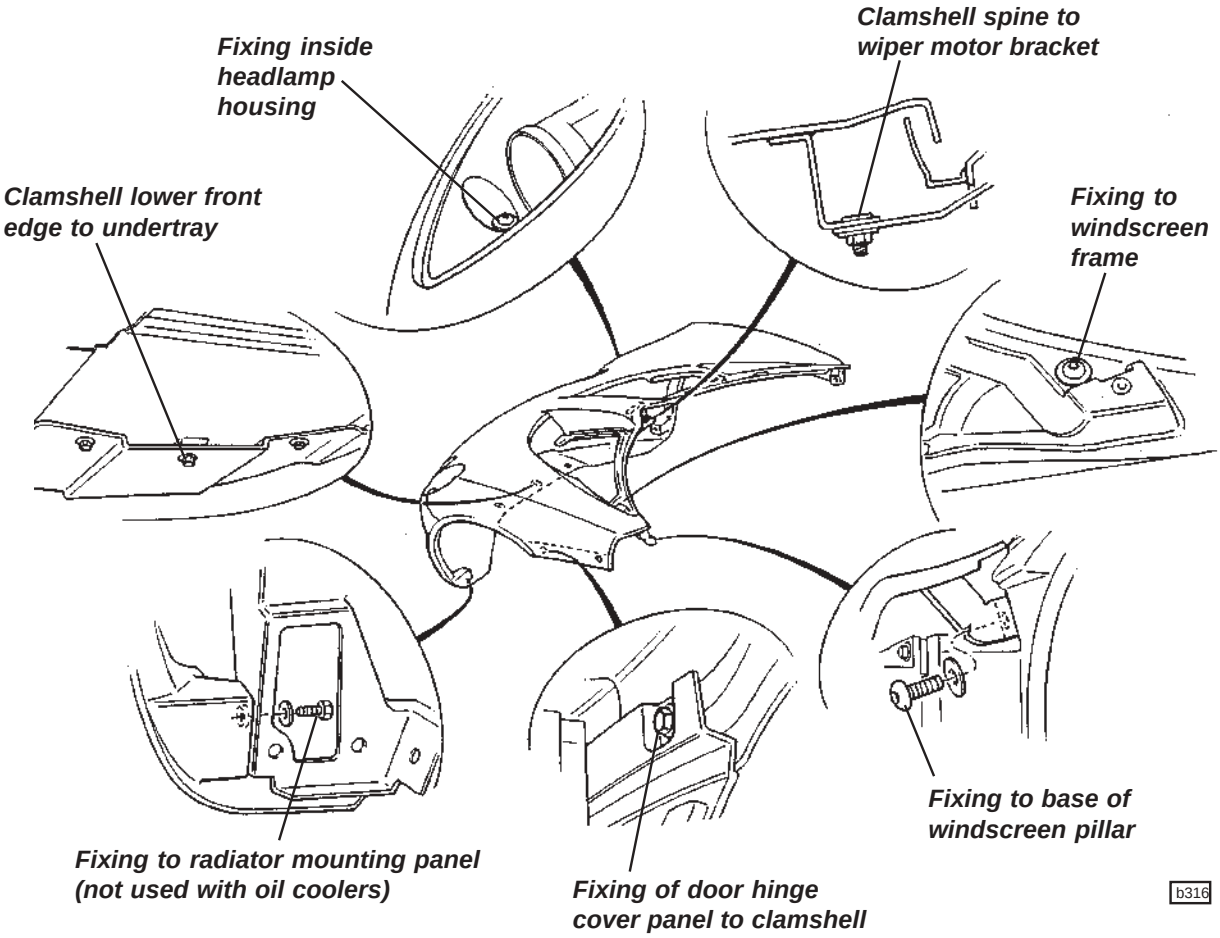

3. From inside each wheelarch, remove the single screw securing the top edge of the door hinge cover panel to the clamshell. On cars fitted with front mounted oil coolers, release the hoses from any clamshell clips around the top of the wheelarch.

4. Via each door aperture, remove the single fixing securing a bracket at the top rear corner of the clamshell to the base of the windscreen pillar.

5. Remove the fixing at each side securing the clamshell to the bottom of the windscreen frame.

6. *Elise:* Remove the two nuts securing the clamshell spine bracket to the wiper motor bracket extension.
Exige: Remove the two nuts and bolts securing the clamshell spine to the wiper motor extension bracket, and the two screws each side securing the clamshell channel to the radiator air deflector panel.

7. If fitted, remove the single fixing at the bottom front of each wheelarch, securing the clamshell to the radiator panel extension (not used on oil cooler cars).

8. Remove the headlamp cover/mask assembly from each side by releasing the three socket head screws inside the wheelarch. Remove the clamshell fixing at the front of each headlamp housing. Release the headlamp harnesses, and feed through the clamshell hole. Disconnect the aerial lead(s).

9. Beneath the nose, release the screws fixing the front lower edge of the clamshell to the alloy undertray.

10. Lift the clamshell from the car. Note any spacing washers or shims fitted at any fixing point.

Downloaded from www.Manualslib.com manuals search engine

BR.7 - REAR CLAMSHELL

The rear clamshell is a one piece composite moulding incorporating both rear wings, the engine bay aperture, rear transom and integral luggage bay. The clamshell is secured to the chassis and other body panels by threaded fasteners for ease of service access and body repair.

To Remove Rear Clamshell

1. Remove the soft or hard top roof (including Exige) - see sub-section BR.1

2. Remove both rear wheelarch liners;

3. *Elise:* Remove the rear window shroud - see sub-section BR.2.
   Exige: From within the cabin, remove the two screws above the rear window securing the top edge of the clamshell to the rear bulkhead. Remove the two cant rail latch plates from their brackets on the roof hoop. Peel off the weatherstrip seal from the clamshell flange.

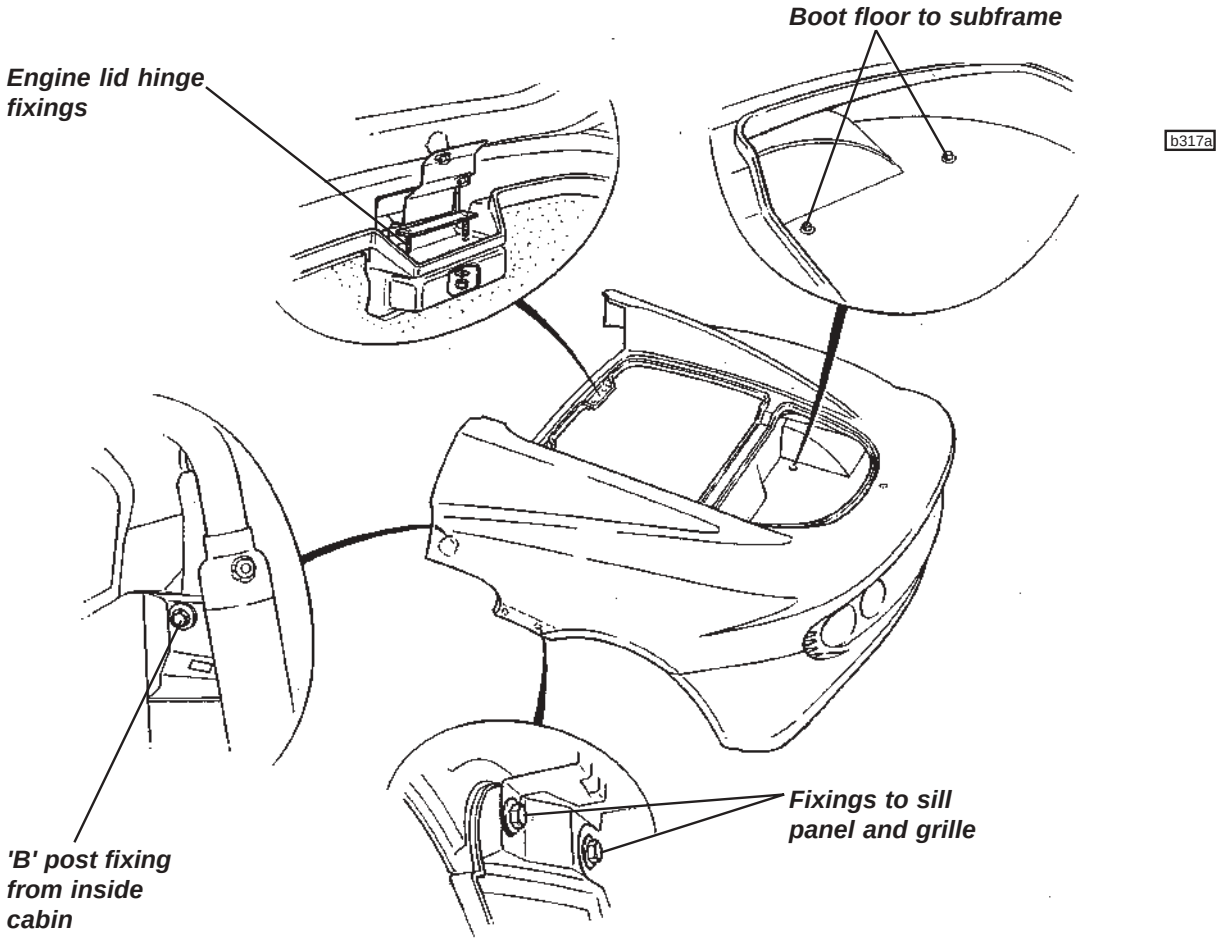

4. From inside the cabin, remove both seats and the full width trim panel from the rear bulkhead. From the access thus provided, remove the fixing securing the front end of the clamshell to the 'B' post above the engine bay air intake.

5. *Elise:* From inside the cabin, release the fixings securing the engine lid hinges to the rear bulkhead, and withdraw the engine lid complete with hinges.

Downloaded from www.Manualslib.com manuals search engine

6. Release the six (USA market) or eight (other cars) screws securing the fuel filler neck to the clamshell. Withdraw the filler neck from the clamshell aperture, noting the earth braid secured to the roof hoop backstay. Keep the filler cap fitted to minimise vapour hazard.

7. Remove the air filter box intake scroll, and from inside each rear wheelarch, release the air intake grille fixings, and the two screws securing the clamshell to the waistline joint of the sill panel. Withdraw each grille from its retaining clip.

8. Remove the battery and feed the battery cables through the clamshell grommet. Disconnect the rear harness and rear lid switch harness from the area behind the battery, and feed through the clamshell grommet.

9. Remove the rear diffuser panel.

10. From inside the luggage area, release the two screws each side securing the boot floor to the subframe.

11. Unhook the washer bottle.

12. Withdraw the clamshell from the car, noting any spacer pads fitted on the subframe.

13. Refit in reverse order to disassembly with the following notes:

Shimming of clamshell floor mounting points:

It is most important to maintain a gap of at least 7mm between the phenolic resin heatshield rivetted to the underside of the clamshell boot floor, and the exhaust muffler corrugated heat shield bolted to the subframe. The corrugated shield must touch neither the muffler, nor the clamshell mounted shield, or heat damage may be caused to the clamshell.

On factory build, the subframe is marked adjacent to each of the four clamshell mounting points with the shim thickness required. Shim plates are available in 1mm and 2mm thicknesses. If a new subframe is being fitted, or the markings are not visible;

- Use a straight edge across the clamshell rear mounting points on the subframe, and measure down to the muffler heatshield. Sufficient shims need to be used to bring this dimension to a minimum of 7mm.
- With these shimplates fitted, trial fit the clamshell and if necessary add further shims to optimise the fit of the clamshell with respect to sill and door shutlines.
- Measure the shim gap at the boot floor front fixing point.
- Remove the clamshell, fit the required shim plates onto the subframe and refit the clamshell.

BR.8 - DOOR MIRRORS

The manually adjustable, plastic housed door mirrrors, are mounted via an injection moulded plinth to the door shell. A spring loaded ball and socket arrangement provides a means of mirror adjustment, and a sprung attachment of the mirror housing to the pivot socket allows for the mirror to move forwards or backwards on accidental contact, in order to reduce the potential for personal injury or vehicle damage.

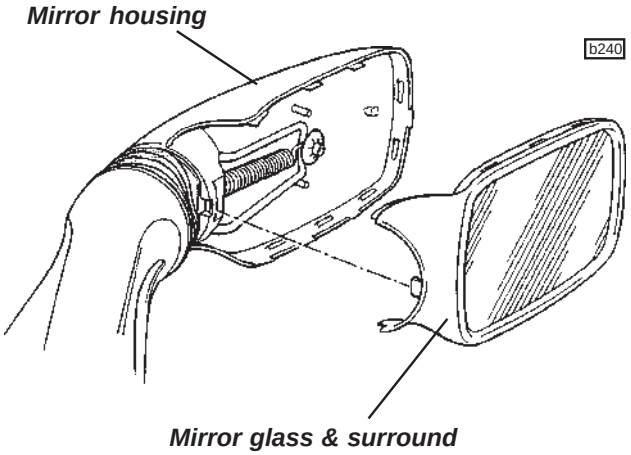

Downloaded from www.Manualslib.com manuals search engine

Replacement of mirror glass

The mirror glass is contained in a plastic surround which is clipped into the housing in order to provide for convenient and inexpensive replacement. To remove a glass, pull back the boot between mirror and plinth, and carefully prise the inboard edge of the mirror surround from its retaining clips. Working around the mirror periphery, continue to prise the surround from the housing taking care not to damage the paint on the housing. Press the new glass/surround into the housing until all the retaining clips are engaged, and reposition the convoluted boot.

Note that convex glass is normally fitted to both sides, but certain markets, including the USA, use flat glass in the driver's side, and passenger side USA mirrors are convex and etched 'Objects in mirror are closer than they appear'.

Replacement of mirror assembly

The mirror assembly locates in the plastic injection moulded plinth via two spigots, and is retained by a single screw tapping into the lower spigot. To remove a mirror assembly, use a cross head cranked screwdriver, or similar tool, to remove the screw recessed into the inside face of the mirror plinth.

Replacement of mirror plinth

The mirror plinth incorporates tapping plates to accommodate a single screw into the top leg, and a pair of M5 screws into the bottom leg. The plinth is secured to the door outer panel with access holes for the three screws provided in the inner panel, cosmetically concealed by adhesive patches.

Note that a magnet may be required when removing or refitting the rearmost screw.

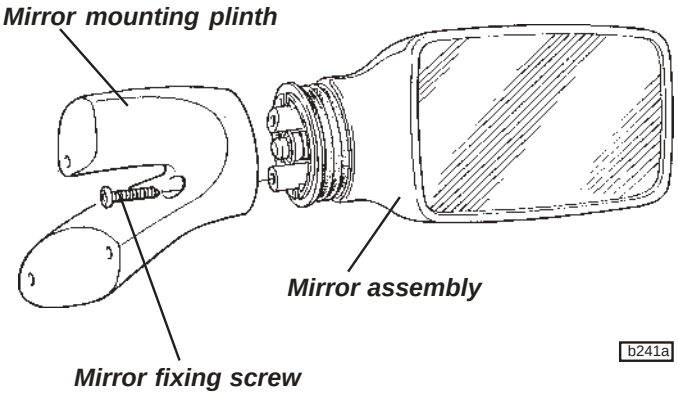

b241a

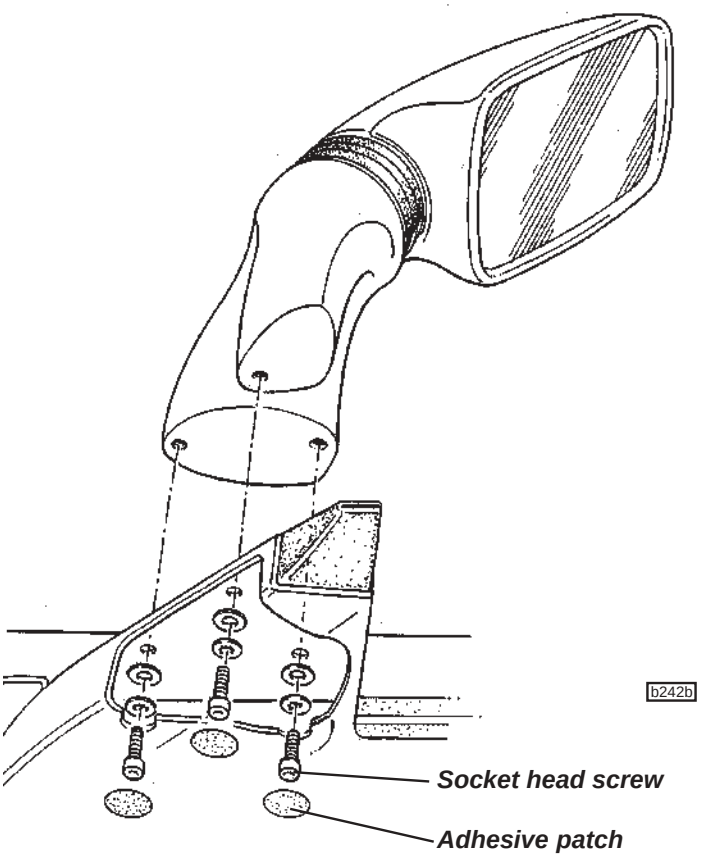

b242b

BR.8A - DOOR SHELL BRACKETS

The composite door shell is fitted with various steel brackets bonded to its inner surface in order to mount the shell to the door beam and also to mount hardware components such as the latch and window lift mechanism. The brackets are bonded to the SMC door structure using ITW Plexus adhesive. If, for whatever reason a bracket should become detached, the following procedure should be used to re-secure:

1. Remove the failed component from the door.

2. Prepare the bonding surface of the component using emery cloth.

3. If the bracket does not already have holes drilled in the bonding surfaces, use the illustrated examples to add 6mm holes to the relevent surfaces and provide the adhesive with a good keying feature.

Downloaded from www.Manualslib.com manuals search engine

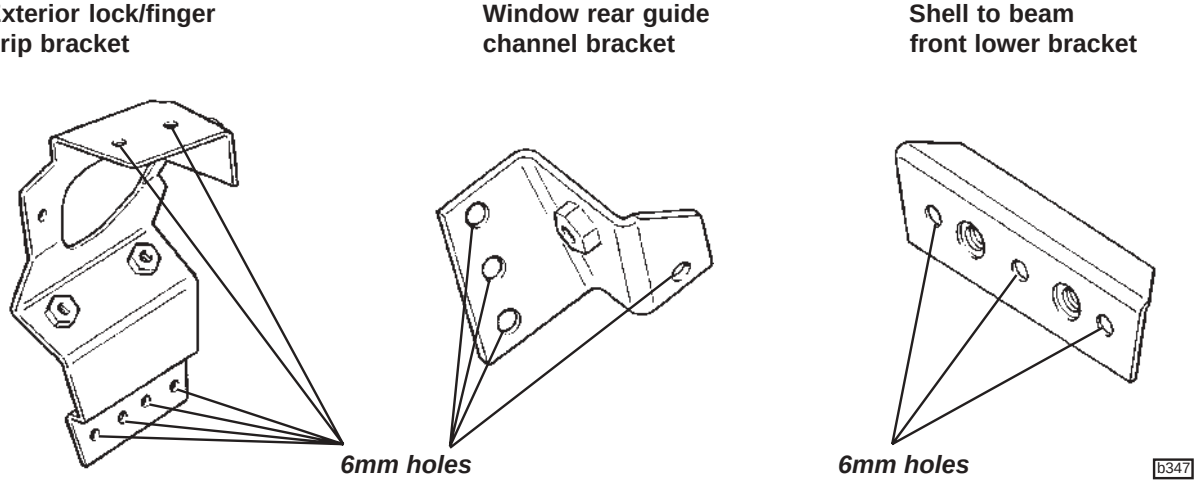

4. Prepare the bonding surface of the door panel using coarse emery cloth and clean with Betaclean 3900 (A100B6008V). It is not necessary to remove all existing adhesive if this is securely bonded.

5. Apply a liberal quantity of ITW Plexus MA 920 adhesive (A117B0209V) to the door panel, and within a maximum period of ***4 Minutes*** (a longer open time will degrade adhesive performance) position the bracket and ensure that the adhesive is extruded through the keying holes. Remove excess adhesive which would interfere with any door functionality. Secure the bracket in position for a minimum of 30 minutes to allow adhesive to cure.

6. Re-assemble door and check for correct function.

7. If a latch mounting bracket needs to be rebonded, it is recommended to fit a cup washer A117W4192K diagonally opposite (i.e. to the latch top mounting screw) to that already used on the inboard lower screw.

BR.9 - DOOR BEAM & HINGE

The door shell is bolted to a hollow section extruded aluminium alloy door beam, hinged at the front end to the 'A' post, and carrying the door latch mechanism, via steel brackets, at its rear end. The front end of the door beam is welded to a second extrusion which forms the rotor of the door hinge. The hinge stator (or hinge bracket) is bolted to an outrigger on the chassis, and incorporates two cylindrical bearing housings fitted with maintenance free pivot bushes.

Door hinge adjustments

In order to provide for adjustment of door shutlines, the door hinge may be adjusted in two ways:

i) Height of the hinge, its fore/aft position, and the pivot axis angle (to control the front/rear height alignment) may be adjusted after slackening the hinge bracket fixing bolts. The tapping plates for these bolts are linked in vertical pairs and are captive, but loose, within the chassis outrigger, and allow for some vertical movement. Horizontally slotted fixing holes in the hinge bracket allow for fore/aft movement.

ii) Slotted shim plates fitted between the hinge bracket and chassis, allow the in/out door front edge alignment to be adjusted in steps of 1 rnm, and by varying the shim pack at the top and bottom pairs of fixings, the vertical alignment, as viewed from the front, may be adjusted.

Ensure that the clamping load of the hinge bracket to the chassis is not corrupted by the shim plates bearing against the body. If the surrounding body stands proud of the chassis door hinge outrigger, use a suitably cut down shim plate to act as a spacer between the chassis and the adjustment shim pack or hinge bracket.

Downloaded from www.Manualslib.com manuals search engine

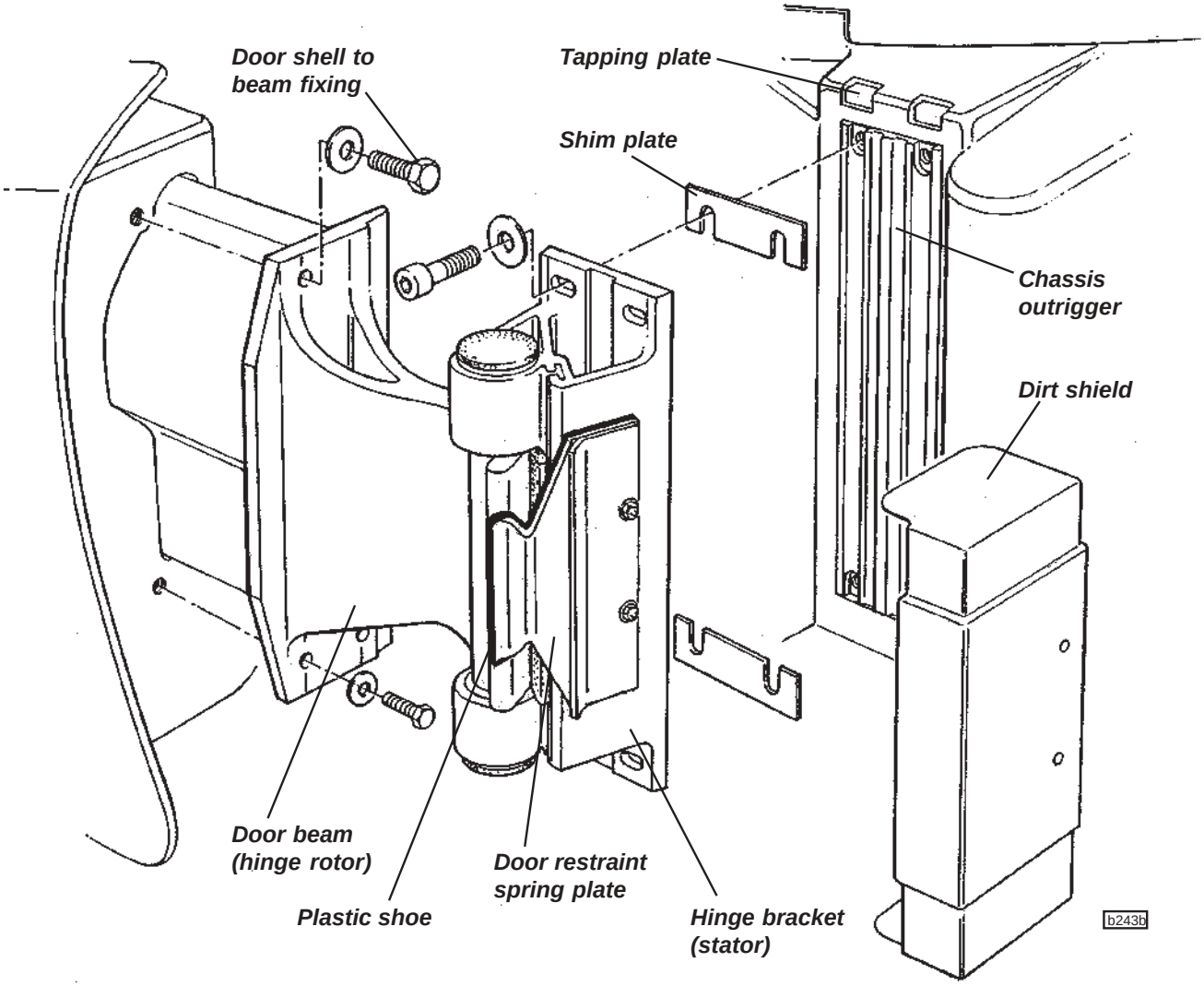

Door beam pivot bearings

The door beam hinge uses two maintenance free 'top hat' section synthetic bearings, pressed into the hinge stator bracket. Inside each bearing, is fitted a 'top hat' section steel rotor bush, clamped to the door beam extension by an M10 cap head screw threaded into the door beam.

The door beam extension also incorporates a cheek flange which abuts against a rubber strip on the hinge bracket to limit door opening angle. A spring steel plate fixed to the front of the hinge bracket is designed to engage around the profiled edge of the door beam abutment flange when the door is fully open, in order to provide a sprung restraint for the door in this position. A plastic shoe is used over the sliding surface of the spring plate to provide for maintenance free operation, with the shoe moulding clamped between the spring plate and chassis. To help protect the hinge mechanism from water and dirt ingress, a plastic shield is push fitted over the retaining nuts for the spring plate.

To remove the door assembly, or for access to the door pivot components, the two M10 cap head rotor bush retaining screws should be removed, and the door assembly withdrawn from the hinge bracket. The rotor bushes and/or bearings may then be withdrawn from the hinge bracket. On re-assembly, note that the bearings and bushes are assembled dry from above and below the upper and lower housings respectively, and the cap head screws tightened to 45 Nm. Insert the rubber bungs into the bush ends to inhibit dirt ingress and corrosion.

Downloaded from www.Manualslib.com manuals search engine

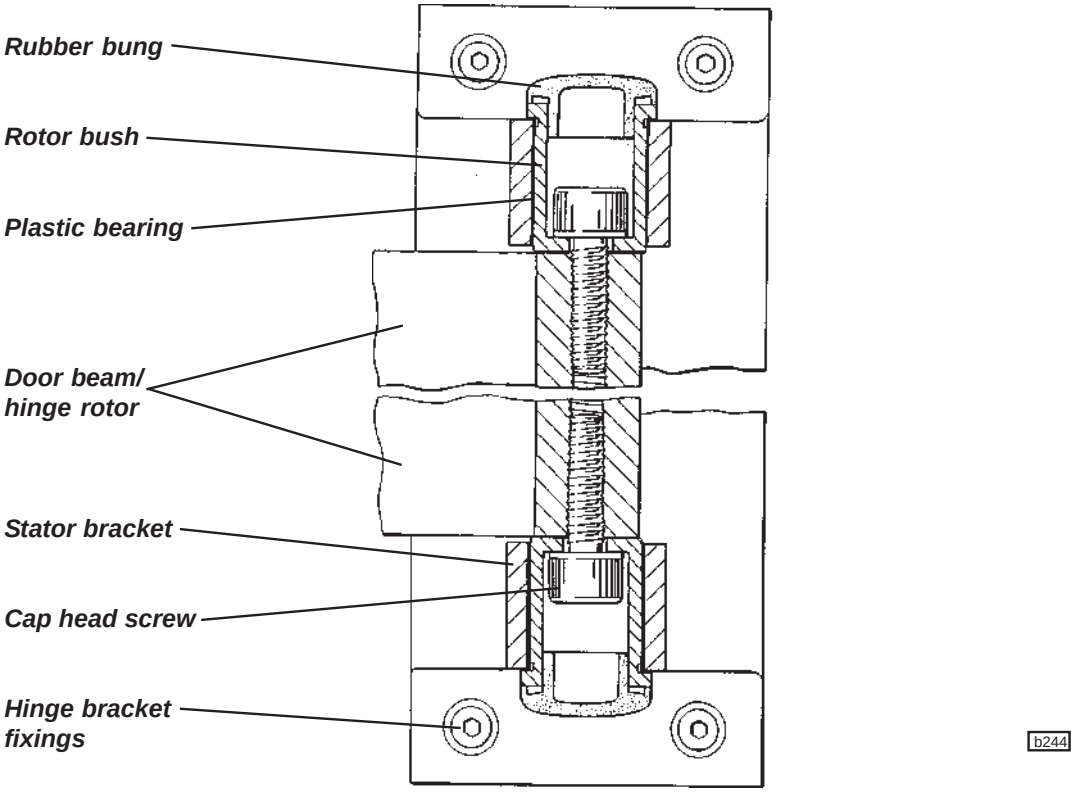

BR.10 - DOOR SHELL ASSEMBLY

The door shell is mounted on the door beam via three screws through a flange at the front end of the beam, and by the door latch mounting bracket at the rear end. In order to provide fixing points for the beam, lock mechanism and other components, the door shell includes various tapping plates and brackets jig bonded to the inside of the shell, including fixing brackets for the accurate location of the window guide rails.

If a door is to be removed from the car, the preferred method is to release the M10 cap head screws clamping the upper and lower bushes to the door beam. The beam and door shell assembly may then be withdrawn from the hinge stator bracket without losing adjustment of the hinge alignment and door shutlines. If the door shell has to be removed from the beam for repairs or replacement, the beam may be left 'in situ' and the door shell slid off the beam using the following procedure:

Removal of door shell from beam

The door shell is secured to the beam via three screws through a flange at the front end of the beam, tapping into nut plates bonded into the door shell, and via two bolts at the rear end of the door to the door beam extension bracket. Access to the two bolts securing the extension bracket to the door beam requires that the door glass first be released:

1. Remove the window winder handle and door trim panel (manual windows) or the door trim panel and window switch (electric windows).

2. Release the three screws securing the interior release handle, and unclip the control rod from the mechanism.

3. Remove the two M6 and the single M8 screw securing the door beam flange to the front of the door shell

4. Release the three M6 nuts securing the door glass to the lift channel, and separate the glass from the channel. Tilt the glass as necessary to allow access to the two M8 bolts fixing the rear end of the door beam to the extension bracket. Remove the bolts and withdraw the door assembly from the beam.
   Note that it is necessary to remove the drop glass waist seal before the glass may be withdrawn from the door.

Downloaded from www.Manualslib.com manuals search engine

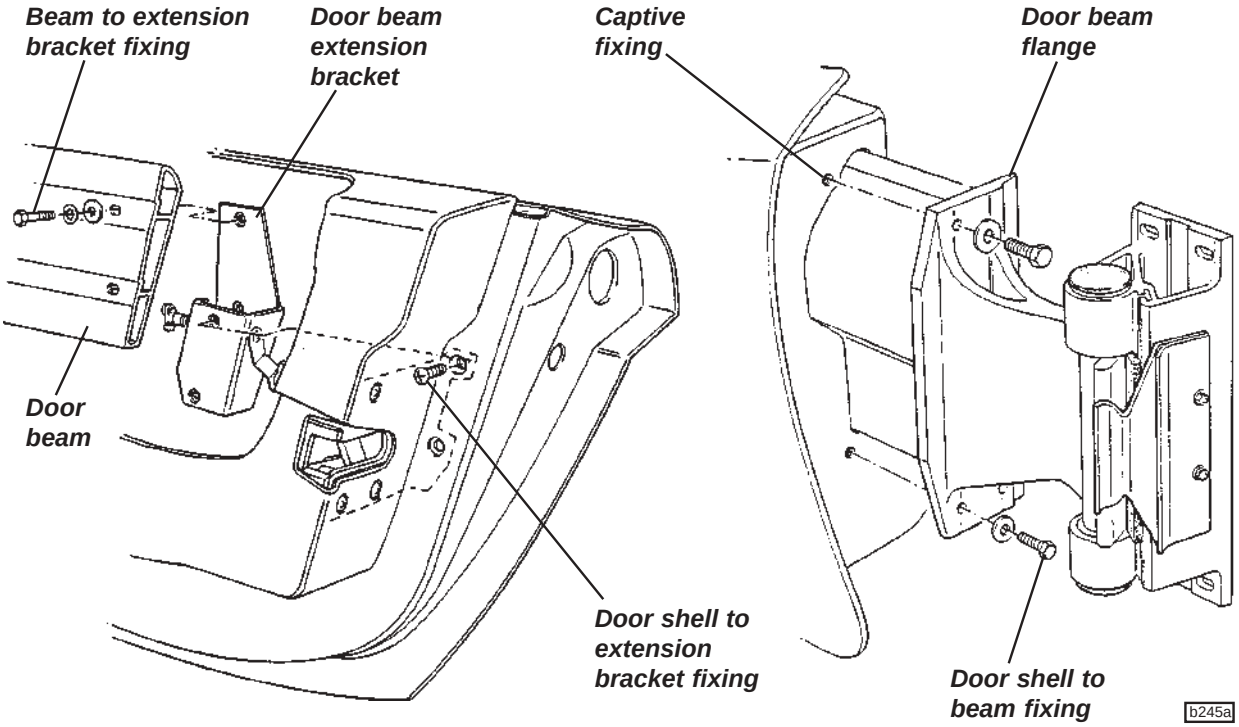

When refitting the door, take care not to scratch the glass if this is contained in the door. Insert the two rear bolts securing the beam to the latch bracket, but do not tighten until the three fixings securing the front of the shell to the beam flange have been fitted and tightened.

BR.11 - DOOR GLASS, GUIDE RAILS & WINDER MECHANISM - Manual Windows

A manually operated door window scissor type lift mechanism is used in conjunction with two steel guide rails and a 'frameless' door design.

The operating principle of the window lift mechanism is that of a scissor linkage, with the front lower end of the primary leg anchored to the door shell, the lower end of the secondary leg sliding in a horizontal channel on the door shell, and the upper ends of both legs sliding in a channel fixed to the bottom edge of the window. The geometry of the system provides for a parallel lift of the glass, where the angle of the bottom edge does not change throughout the range of travel. An extension to the primary scissor leg carries a toothed sector which is engaged by a pinion on the window winder. The front and rear edges of the glass are guided by steel rails which engage with point contact Nylon guide blocks bonded to the glass. The bottom ends of the rails are adjustable in/out to set the inward tilt of the glass, with the 'up' glass position controlled by an eccentric stop on the winder mechanism.

Door glass adjustment

To adjust the door glass for optimum weather sealing and ease of operation:

1. Fit the soft top roof and fully raise the window. Check the alignment of the top edge of the glass against the seal, and the seal compression along the cant rail and up the 'A' and 'B' posts. A light compression is required; just sufficient to ensure sealing, without imposing loads on the winder mechanism.

2. To adjust the inward tilt of the glass, screw the adjusters at the bottom of each guide rail in or out as necessary. Access is available without removing the door trim panel. Check that the window glass moves freely throughout the range of travel.

Downloaded from www.Manualslib.com manuals search engine

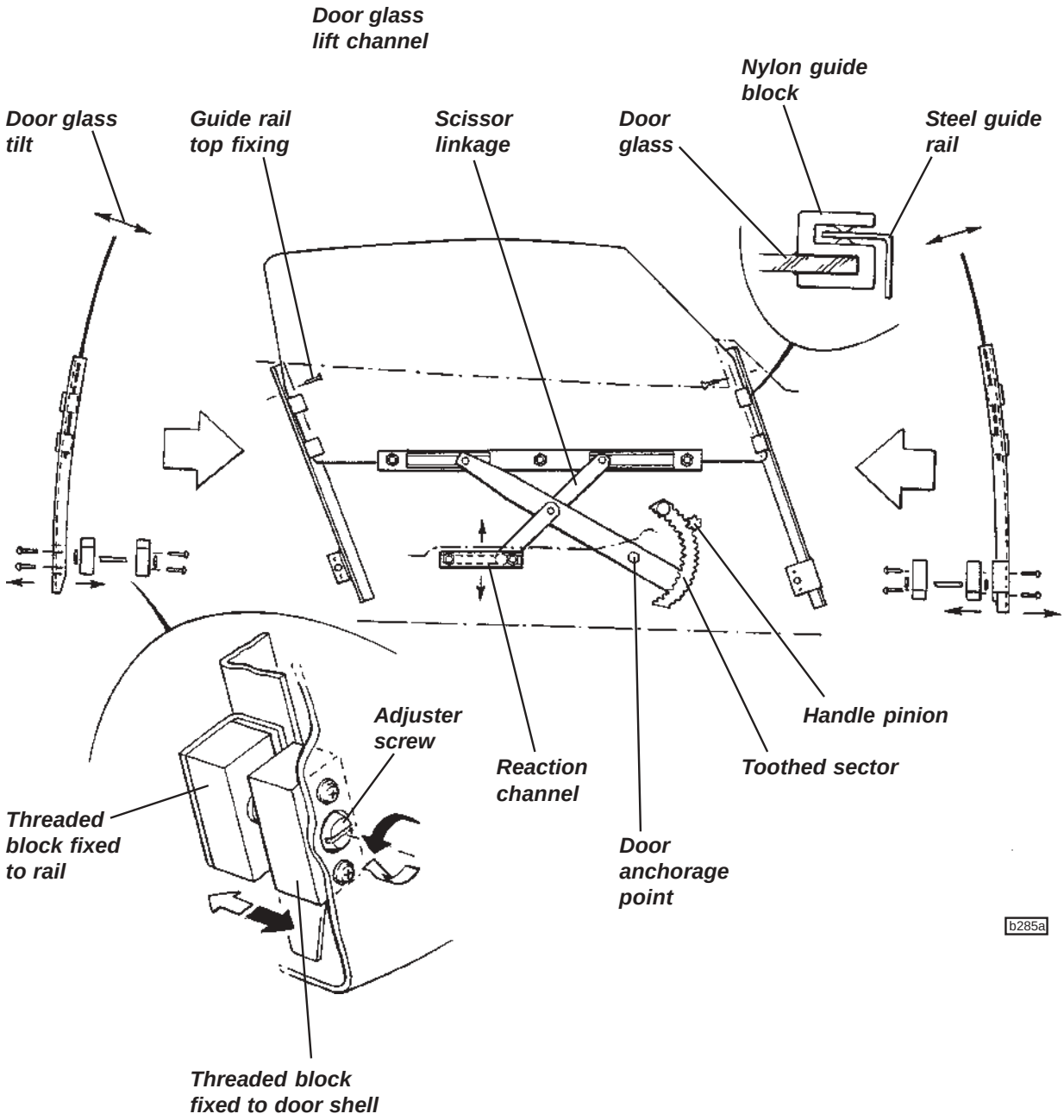

Downloaded from www.Manualslib.com manuals search engine

3. To adjust the alignment of the top edge of the glass, it is necessary to adjust the height of the reaction channel. Remove the window winder handle and door trim panel, slacken the reaction channel fixings, and move the channel up or down as required. *Raising* the channel will raise the *rear* edge of the glass.

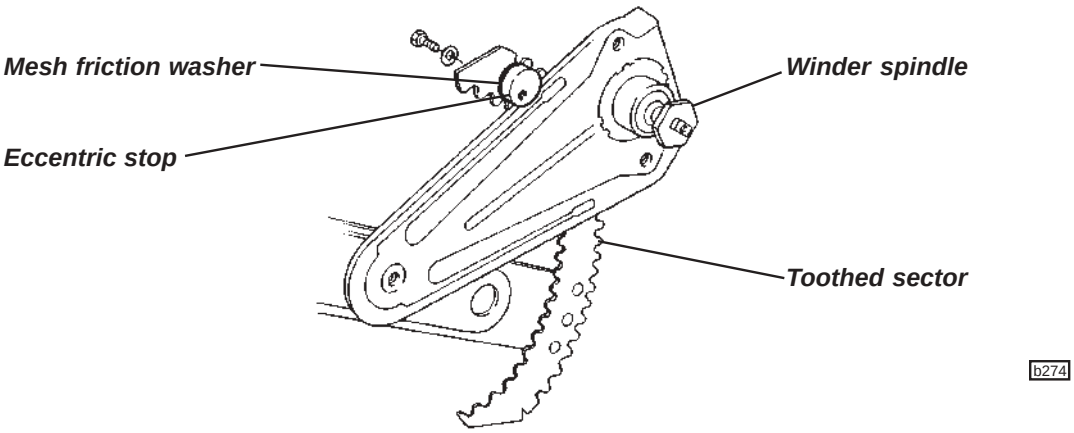

4. To adjust the fully up position of the glass, the eccentric stop on the toothed sector of the winder mechanism must be rotated as necessary. A mesh friction washer is fitted between the eccentric and the sector to help retain adjustment.

To replace the door window glass

1. Remove the window winder handle, and the door trim panel.

2. Release the three fixings securing the slider channel to the bottom of the glass.

3. Do not attempt to withdraw the glass from the door without first removing the door waist seal. Carefully prise the one-piece seal off the door shell inner and outer flanges, and release the push fixing from the seal moulding at the rear end of the door. Withdraw the glass from the door shell.

4. Note that new door glasses are supplied complete with jig bonded Nylon sliders and stud plate.

5. Fit the new glass into the door and re-assemble in reverse order to the above.

6. Adjust the glass position as detailed above.

To replace door winder mechanism

1. Remove the window winder handle, and the door trim panel.

2. Release the interior release control rod from the door handle and unclip from the latch mechanism.

3. Secure the door glass in the fully raised position, and release the three fixings securing the winder mechanism to the door;
   - two fixings adjacent to the winder spindle;
   - on fixing through the static pivot of the primary scissor arm

4. Manoeuvre the mechanism to free the winder spindle from the door, and to disengage the two upper sliding bosses of the scissor arms from the window channel, and the lower sliding boss from the static reaction channel. Withdraw the mechanism from the door.

5. Before fitting a lift mechanism, lubricate the three slider bosses and the sector teeth with Century Luplex M2 grease (or similar). Fit the mechasnism into the door and engage the three slider bosses in their lift and reaction channels before securing with the three fixing screws. Note that a single M6 spacer washer is used between the pivot of the primary scissor arm and the door shell.

Downloaded from www.Manualslib.com manuals search engine

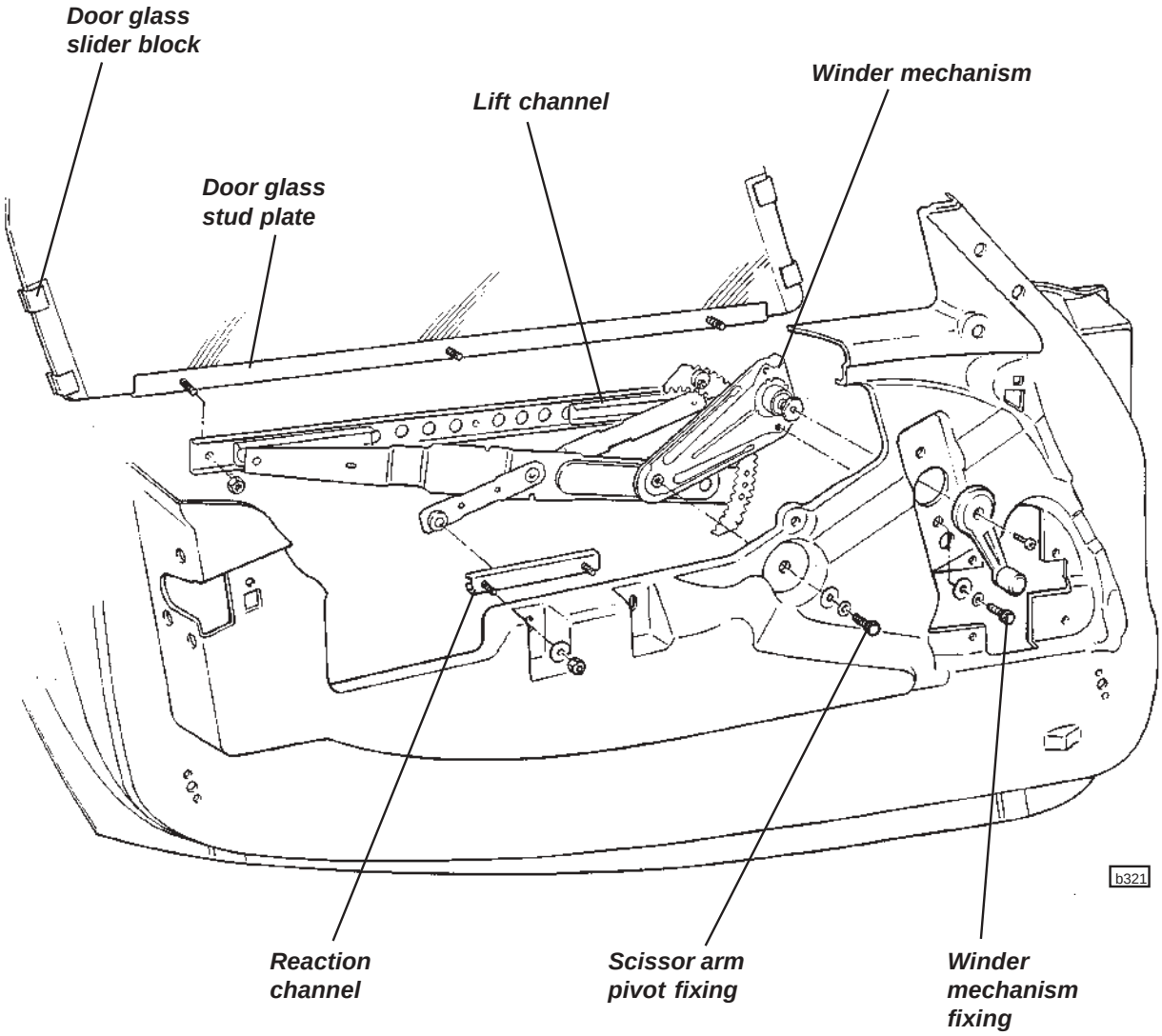

6. Adjust the glass upstop postion, top edge alignment and inward tilt as detailed above.

Door glass guide rails

Two guide rails are used for door glass; one for the front and one for the rear edge. Each of the steel, black zinc plated, guide rails, is secured by a single screw at the top end to a jig bonded bracket in the door shell, and by a threaded adjuster at the lower end, engaging in a threaded block fixed to the door shell. Screwing the adjusters in or out will set the inward tilt of the glass and the contact between glass and door weatherseal.

To remove a guide rail, first remove the door glass (see above), before releasing the single screw at the top, and releasing the threaded block from the door shell.

Downloaded from www.Manualslib.com manuals search engine

BR.12 - ELECTRIC WINDOWS (Parts List 11.02)

On cars so equipped, switches for the electric windows are mounted in the front of the door trim panels, and are operative only with the ignition switched on. To help locate the switches in the dark, an illuminated dot is provided in the 'down' button which glows amber when the lights are switched on.

To lower a window, switch on the ignition and press the lower, dished end of the switch in the relevent door. Release the switch to stop window movement. To raise a window, press the upper, domed end of the switch.

The electric operation of the door windows comprises;

- An electric motor and winder drum assembly mounted on a bracket which is bolted to the door shell.
- A guide channel for the window lift block, incorporating top and bottom cable pulleys, bolted to the door shell.
- A single drive cable running from the window lift block, around a guide channel pulley, through a flexible conduit, around the motor driven winder drum, through another conduit, around the second guide channel pulley and back to the window lift block.
- An adaptor plate bolted to the stud plate on the lower edge of the door glass.

Viewed from outboard

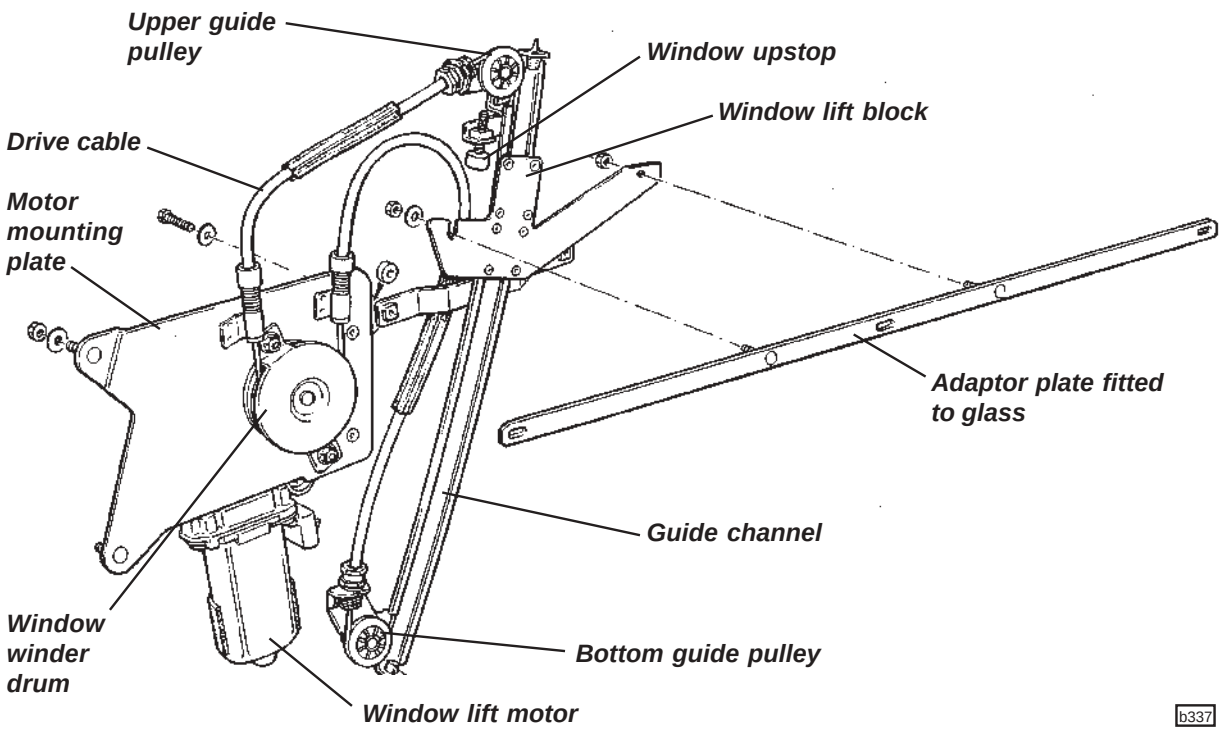

Door Glass Adjustment

- The door glass guide channels and adjustment procedures are the same as used on manually operated windows. Refer to sub-section BR.11.
- The upstop for the door glass is fitted at the top end of the lift block guide channel in the form of an adjustable stop screw against which a projection on the window lift bracket abuts.
- The front/rear height of the top edge of the glass may be adjusted at the slot where the front of the window lift bracket attaches to the door glass.

Downloaded from www.Manualslib.com manuals search engine

Replacement of Window Lift Mechanism

The window lift mechanism comprises the motor, drive cable and guide channel assembly as a complete unit. To remove the mechanism:

1. If possible, raise the window fully for optimum access.

2. Remove the door trim panel and disconnect the window switch. Peel off the plastic water shielding.

3. Release the window lift bracket from the door glass and secure the glass in the fully raised position taking care not to damage the door waist seals in the top of the door shell.

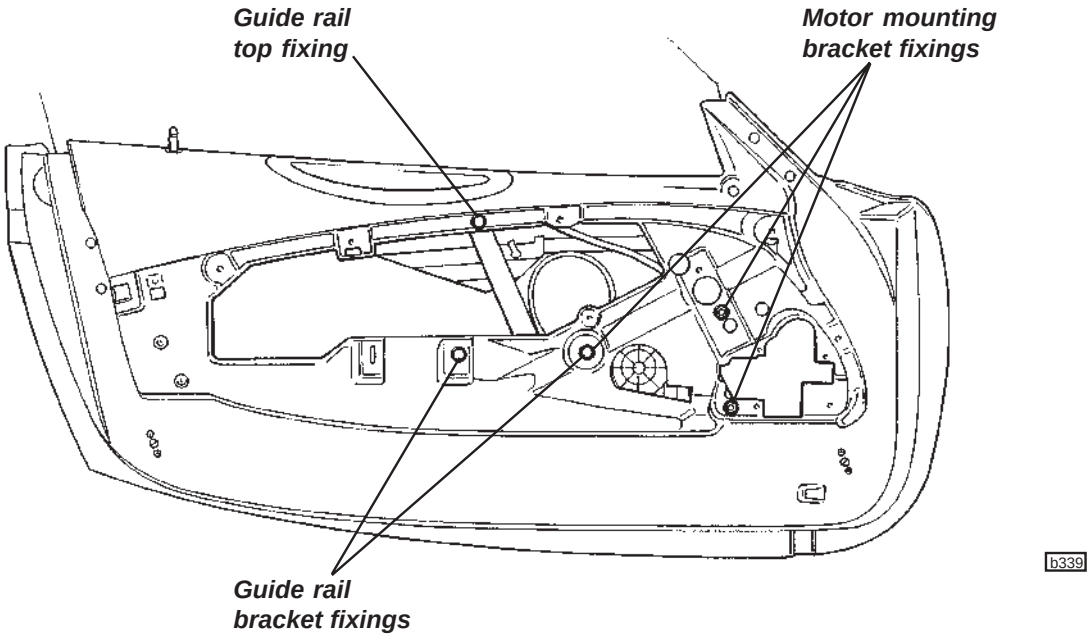

4. Unplug the motor electrical connector. Release the three fixings securing the motor mounting bracket, and the two remaining fixings securing the guide channel to the door shell.

5. Carefully manoeuvre the lift mechanism from the door.

6. Refit in reverse order to removal, noting that the motor mounting bracket is fixed directly against the door shell, but that 4mm plastic spacers are used at each of the three guide rail fixings..

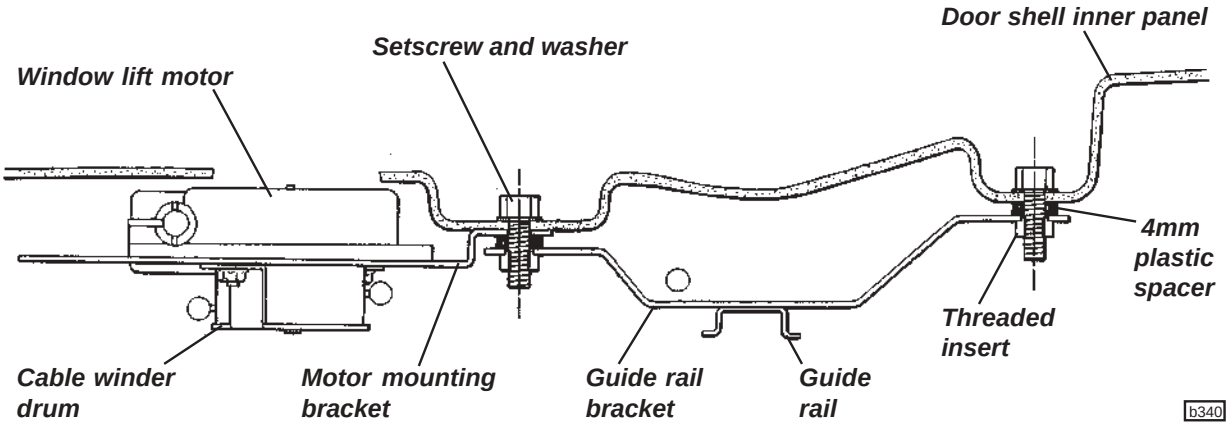

Downloaded from www.Manualslib.com manuals search engine

Note that the door glass is common to manually operated windows, with slider blocks bonded to the front and rear edges, and a studplate channel bonded to the lower edge. For electric window operation, an adaptor studplate is used to provide two studs for the window lift bracket.

BR.13 - DOOR SEALS (Parts List 11.01)

Drop Glass 'Waist' Seal

The door drop glass waist seal is a single unit comprising inner and outer seal extrusions joined around the rear end by a moulded capping piece. Each length of seal is pressed onto the top edge of the inner or outer door panel, with a plastic rivet securing the capping piece. The seal should be removed before withdrawing the door glass or guide channels from the door.

A 'cheater' seal is bonded to the front and rear faces of the door mirror mounting extension. To fit a new seal:

- Clean the bonding surfaces on the door shell edges with Betaclean 3900 (A100B6008V).
- Apply Permabond A905 surface conditioner to the bonding surfaces of door shell and cheater seal.
- Apply Loctite 382 adhesive to the inside of the cheater seal and fit onto the door.

Door Weatherstrip

A hollow section rubber weatherstrip is bonded around the door aperture and roof landings to seal against the door shell and roof. Different seal configurations are used for the door and roof areas, with specially moulded sections to interface with the roof cantrails. The seal is divided into front and rear sections, with a joint at the bottom front of each door aperture.

The weatherstrips are manufactured with a self adhesive backing strip. Before fitting a new seal, the bonding area on the body must be thoroughly cleaned with Betaclean 3900 (A100B6008V). In the critical area of the 'A' post to windscreen header rail corner, an adhesive promoter 3M 4298UV (A116B6000V) should be applied along the seal path to to ensure optimum seal retention. Trial fit the seal before peeling off the protective backing from the adhesive and applying the seal, ensuring that the moulded sections at the cant rail interfaces are correctly positioned.

When fitting the rear section of the seal, remove the backing strip from the seal in the section around the latch plate, and fully insert the weatherstrip nodule into the gap between the 'B' post and rear window shroud.

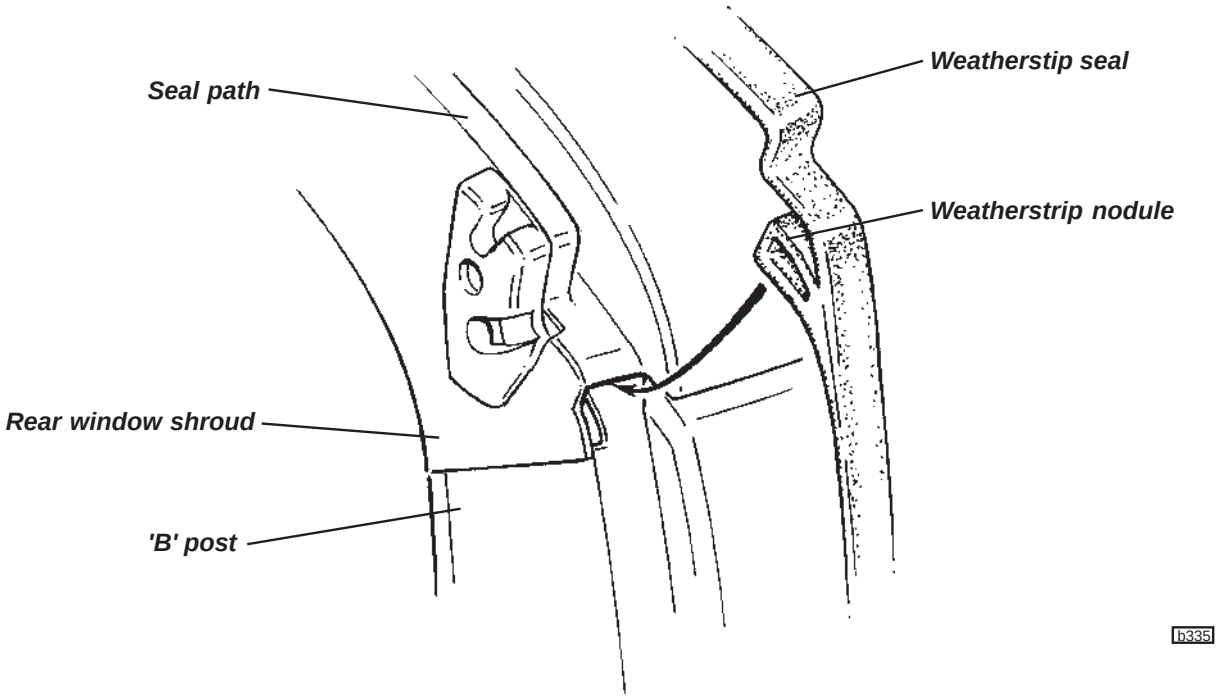

Downloaded from www.Manualslib.com manuals search engine

Continue to remove the backing strip and stick the weatherstrip along the seal path down the 'B' post and along the bottom of the door aperture. Cut the seal to mate with the end of the front weatherstrip. Repeat for the opposite side, and then remove the top section backing strip and secure the seal along the roof shroud flange. Use a roller wheel along the whole length of the seal to ensure full adhesion.

A secondary 'J' section seal is applied to the front vertical face of the door shell, linking to the cheater seal.

BR.14 - DOOR LATCH MECHANISM - Without CDL (Parts List 10.17)

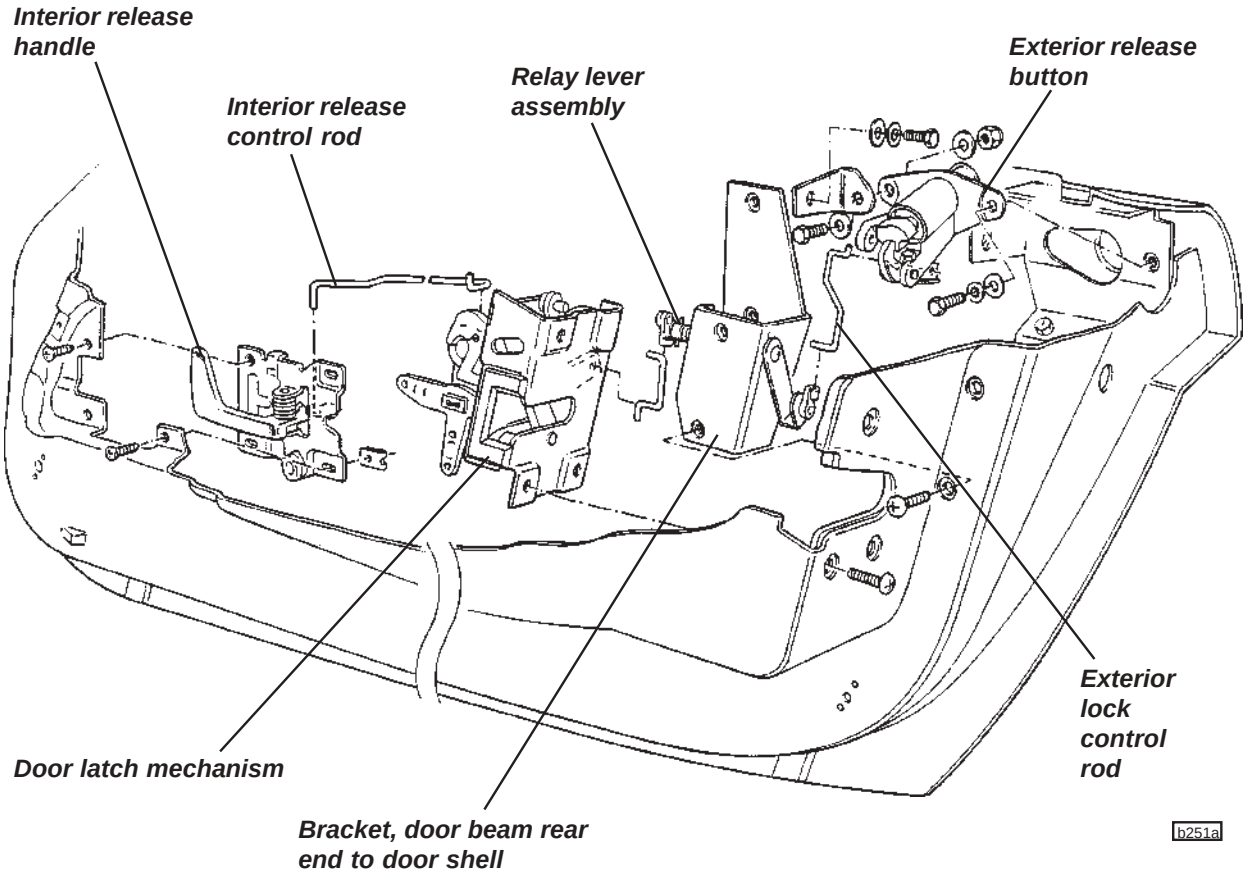

Downloaded from www.Manualslib.com manuals search engine

The door latch mechanism is fitted inside the rear face of the door, which is reinforced by a steel plate bonded to the glass fibre composite door shell. The latch engages with a striker pin which passes through the composite sill/'B' post moulding, into a captive nut on the roll over bar. An external locking door release button is mounted via a reinforcing plate, in the top rear of the door outer shell, and transmits its motion around the rear edge of the door glass to the latch mechanism via two short link rods and a relay lever.

The interior release handle is mounted in the front of the door inner shell, and is connected to the latch mechanism by a control rod. No interior control of door locking is provided.

Interior Release Handle

- Remove the window winder handle and door trim panel.
- Remove the four screws securing the interior handle assembly and unclip the control rod end clip to allow the rod to be unhooked from the handle.
- On refitting, ensure that the control rod is located in the guide clips.

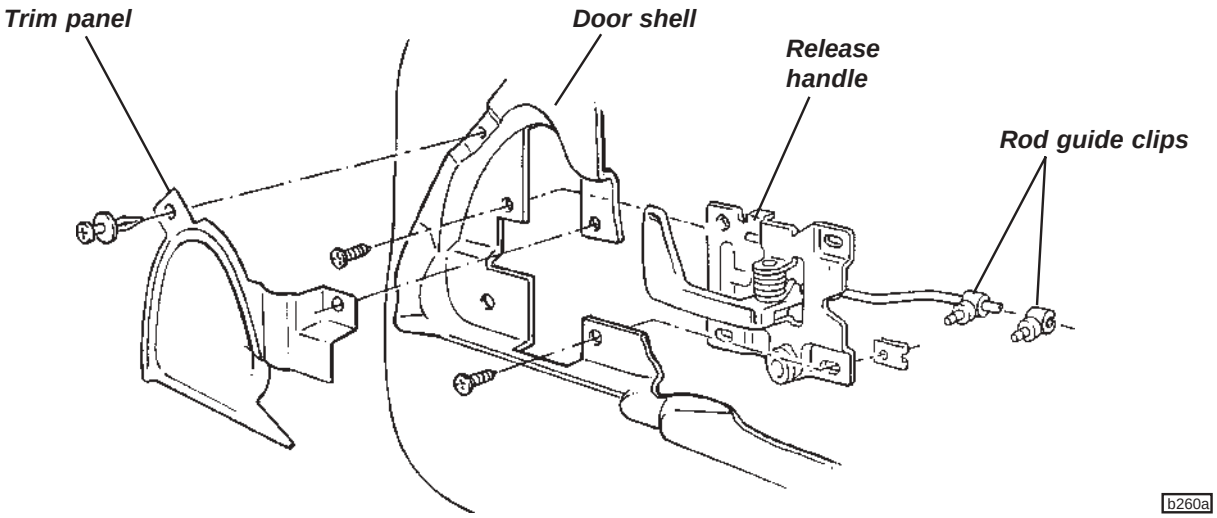

Exterior Release Button

- Remove the access disc from the rear face of the door, and the rod access grommet lower down.
- Release the two screws securing the lock assembly and angle bracket to the tapping plate bonded in the door shell.
- Unclip the link rod from the relay lever, and withdraw the lock button from the door.

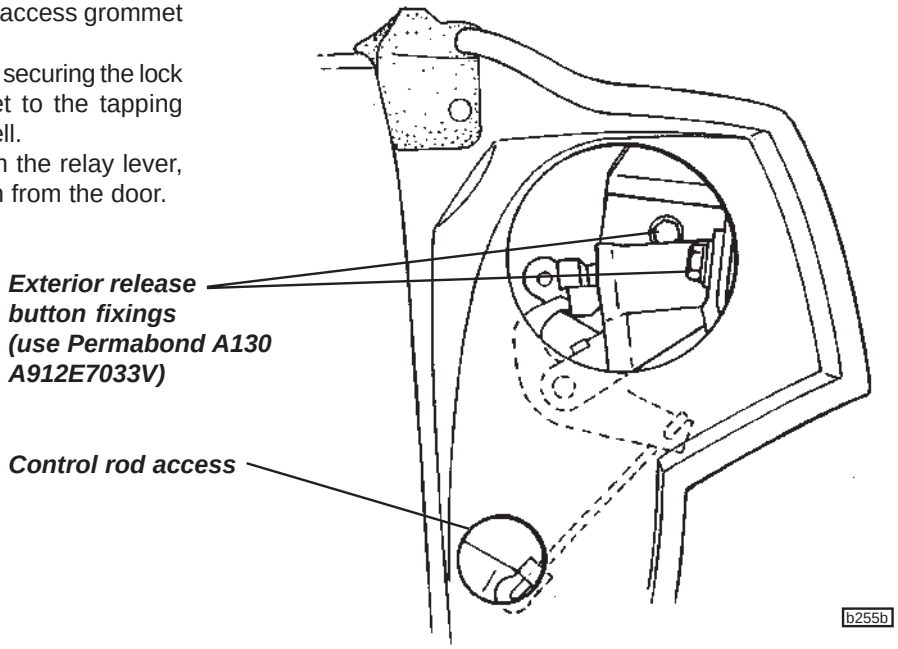

Downloaded from www.Manualslib.com manuals search engine

Latch Mechanism

- Remove the window winder handle and door trim panel.
- Unclip the control rod from the interior release handle, and unhook from the latch mechanism.
- Unclip and disconnect the short link rod between the relay lever and the latch mechanism.
- Remove the three M6 screws securing the latch mechanism to the door, and withdraw the latch.

Viewed through outer door skin

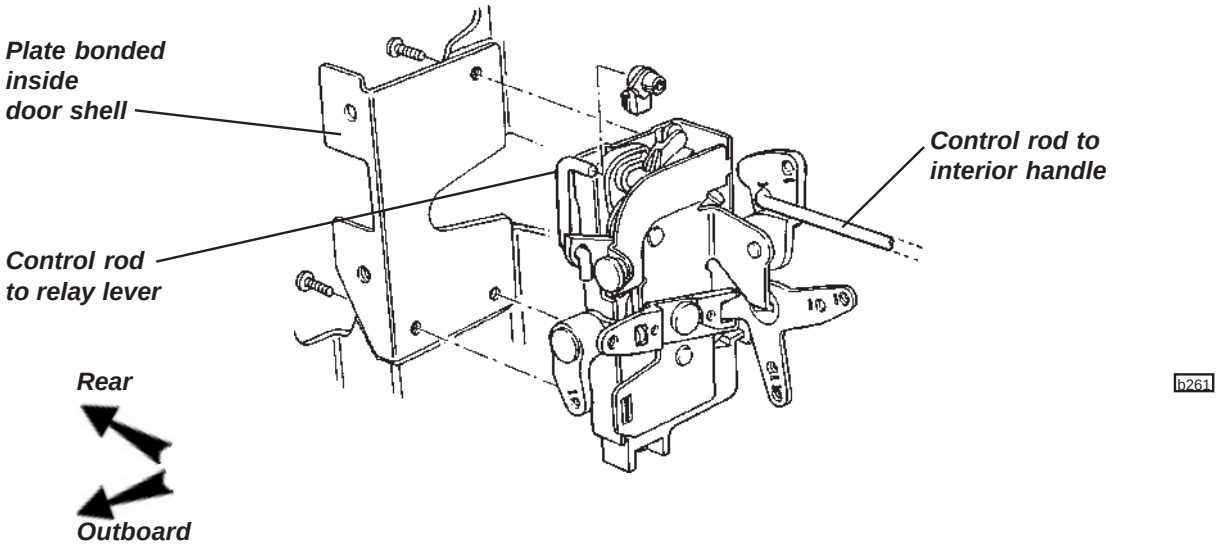

Relay Lever Mechanism

The relay lever components comprise a shaft with an integral lever on one end, which connects to the exterior lock button, and a second lever pinned to the other end, which connects to the latch mechanism. The shaft is supprted in two fibre bushes housed on the bracket connecting the rear end of the door beam to the door shell. To remove the door beam extension bracket complete with relay lever mechanism:

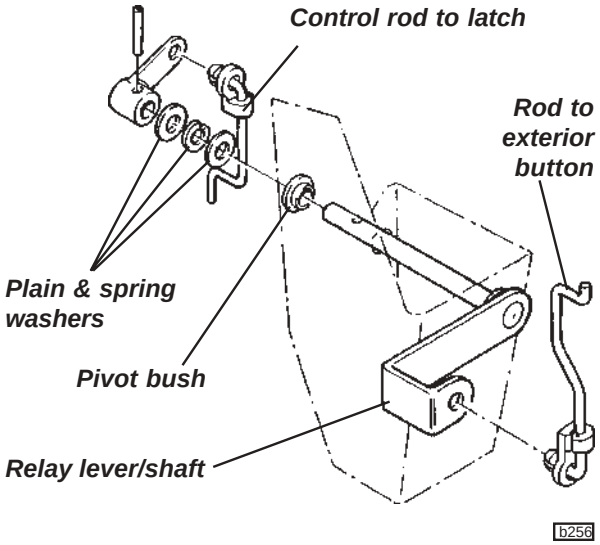

- Remove the window winder handle and door trim panel.
- Release the three M6 nuts securing the door glass to the lift channel, and separate the glass from the channel. Do not attempt to withdraw the glass from the door without first removing the door glass waist seals.
- Remove the access grommet from the rear face of the door, and unclip the exterior lock link rod from the relay lever. Similarly disconnect the link rod between the relay lever and the latch mechanism.
- Support the door shell before removing the two M8 bolts fixing the rear end of the door beam to the end bracket, and the two screws securing the bracket to the door shell. Remove the bracket complete with relay lever assembly from the door.
- Refit the bracket in reverse order to removal.

Downloaded from www.Manualslib.com manuals search engine

BR.15 - CENTRAL DOOR LOCKING (Parts List 10.17)

On cars so equipped, the central door locking (CDL) operates on the driver's and passenger's doors in conjunction with the Cobra 8185/8186 security alarm system. For full details of the alarm system, see sub-section MP.1.

To lock the car, remove the ignition key, close both doors and check that the engine cover and front body access panels are secure. Arm the security alarm in the usual way by pressing once, for a full second, the larger of the two buttons on the transmitter key. This action will both arm the alarm and electrically lock the driver's and passenger's doors.

If it is desired to lock the doors from inside the vehicle, for example to deter highjack attempts, a CDL rocker switch is provided on the front of the gear lever shroud which should be pressed to the right to lock both doors with or without the ignition switched on. Alternatively, the doors can be locked individually by depressing the button at the rear end of each door sill. Note that whichever locking method is used, the doors will be 'deadlocked' such that the interior door release handles are inoperative.

To unlock the doors, press once, for a full second, the larger button on the transmitter key. The alarm will be disarmed and both doors unlocked. Alternatively, from inside the car, press to the left the rocker switch on the gear lever shroud to unlock both doors, or raise the sill button on each door. Note that in the event of a vehicle collision which causes the safety inertia switch to be tripped, the doors will automatically be unlocked.

Notes:

- In the event of a flat vehicle battery, the central door locking will not operate. The doors can be unlocked only after opening the boot lid and restoring power to the battery by substitution, re-charging or 'jumping' to a second battery.
- To lock the car with a flat or disconnected battery, use the mechanical key in each exterior door button to disconnect each release button from the latch. This technique does not 'deadlock' the interior release handles, but does allow continued key access to the car until restoration of battery power.
- To deadlock the car with a flat vehicle battery, or without the use of the transmitter or mechanical key, close and lock one door using the sill button, and for the second door, hold the exterior release button pressed in and depress the sill button before closing the door. Access is now available only on restoration of electrical power.

Door Locking Actuator

A CDL actuator is screw fixed to the door shell below the latch mechanism, and uses a link rod which passes through the rearmost (shortest lever length) hole on the latch lever, before continuing upwards to the door sill button. The latch mechanism within the door is protected from tamper attempts by a plastic security shield fixed with screws through the door shut face. To remove an actuator, remove the door trim panel, security shield, release the two actuator fixing screws, unhook the actuator from the link rod and disconnect the harness.

Refit in reverse order to removal, noting that no adjustment is required.

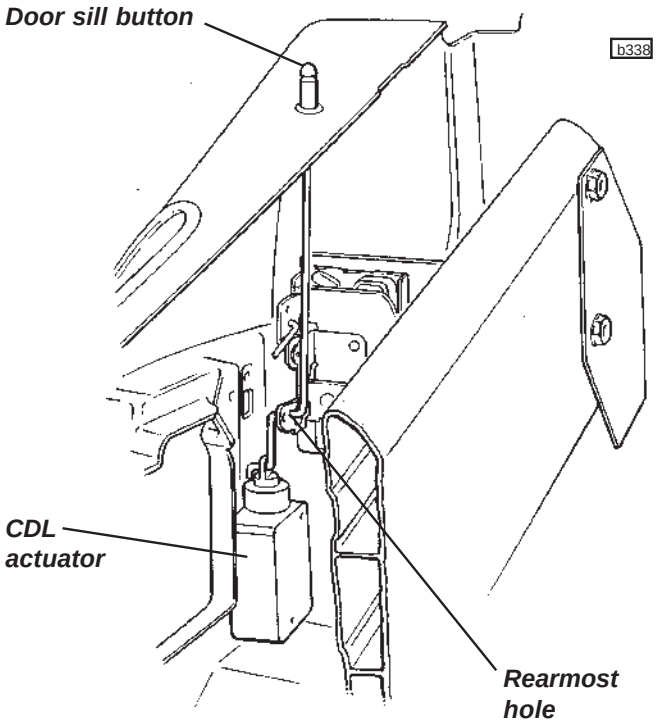

Downloaded from www.Manualslib.com manuals search engine

BR.16 - INSTRUMENT BINNACLE & DASH PANEL (Parts List 14.10, 14.05, 14.05b)

The dash panel comprises interlinking alloy extrusions which join the chassis scuttle beam to the base of the windscreen pillars, and also provide a mounting for the fascia top trip panel. The lowermost extrusion, which incorporates a curved shelf, is keyed into a slot in the scuttle beam and is secured by rivets at each end to the beam. On non-airbag cars, two interlinking extrusions are joined by self tapping screws to form the top part of the dash panel, which is divided into two sections by the steering column. This upper dash is used to house the face level vents and audio set. On airbag cars, the two upper extrusions are combined into a single extrusion, which profile and function is similar to non-airbag cars, and which bridges the steering column area and includes an aperture through which the passenger airbag is deployed.

The upper extrusion(s) slots behind the top edge of the lower dash, and is secured at each end by two screws to threaded inserts in the base of the windscreen pillars. Additional location is provided by rivets securing the speaker or door sill trim panel mounting brackets.

On non-airbag cars, a skinned foam fascia top panel, trimmed with suede material, joins the top of the dash to the base of the windscreen and incorporates the demist ducting and four windscreen outlet vents, with a moulded plastic capping panel around the front of the fascia top and surrounding the vents. At each end of the fascia, a moulded plastic panel joins the fascia to the door sill finisher, and is used to mount the front speakers and lighting switches.

On airbag cars, the untrimmed skinned foam panel incorporates the ducting to the six fixed demist outlet vents, and also houses the front speakers. The face level vent outlets are housed in the moulded plastic panels joining the fascia to the door sill finishers and in a central moulding also housing the audio set.

For access to the climate controls, or electrical components mounted on top of the chassis scuttle beam, the fascia top panel must be removed.

To Remove Fascia Top Panel - non airbag cars

1. Remove the steering column upper and lower shrouds:
   - Remove the four screws securing the shroud upper section.
   - Pull out the grommet from around the ignition switch and remove the three screws securing the lower shroud to the column.
   - Disconnect the trip reset button from the lower shroud.

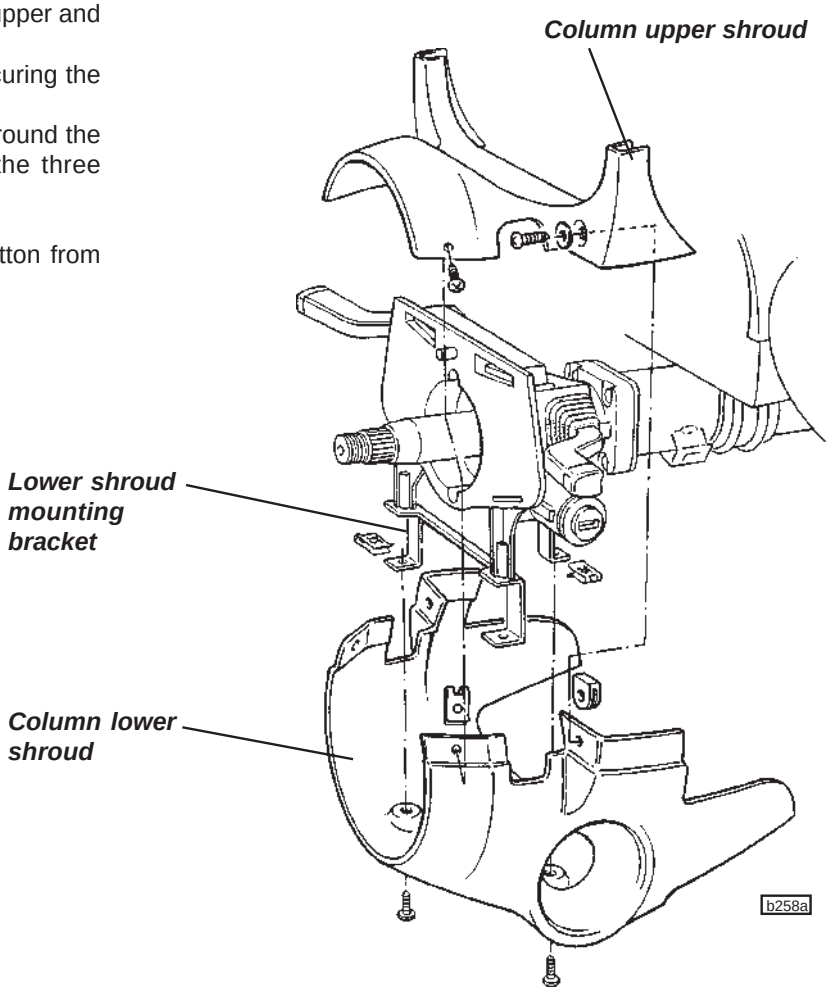

Downloaded from www.Manualslib.com manuals search engine

2. Release the two fixings securing the binnacle mounting brackets to the column, and withdraw the instrument pack and cowl. Unplug the harness connector.

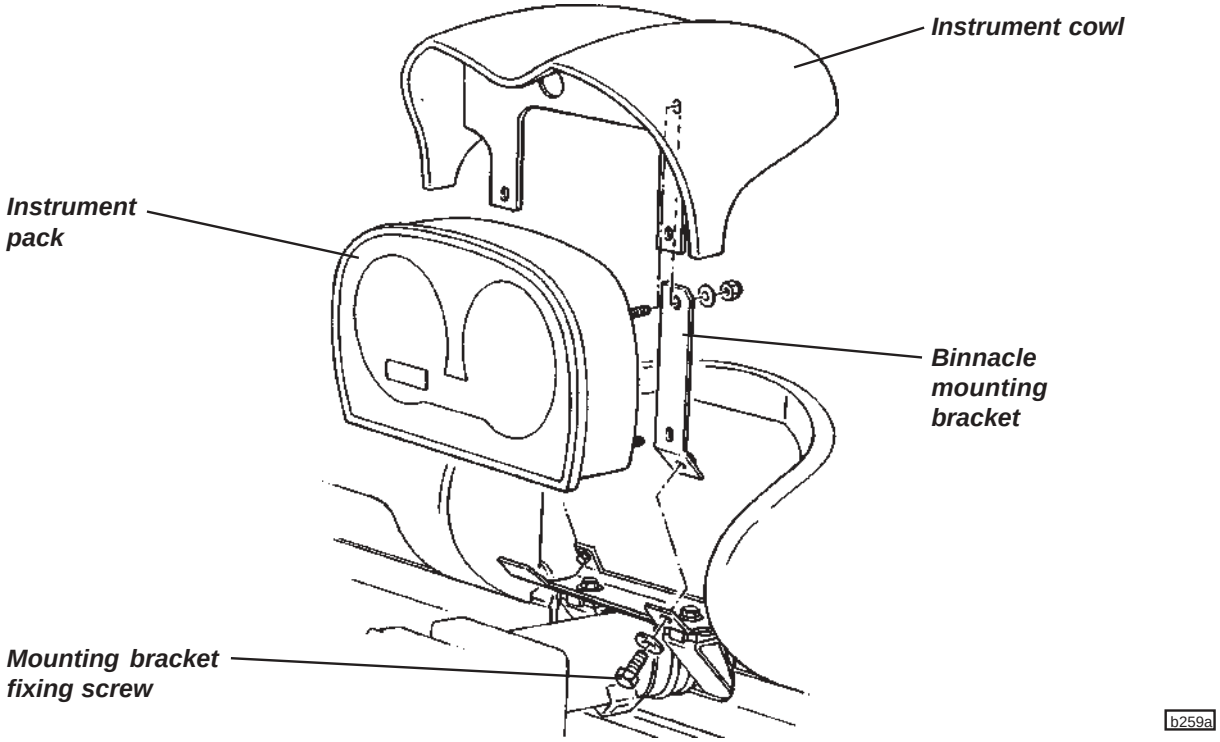

3. Release the screws securing each fascia end (speaker) panel, disconnect the switch and speaker harnesses and withdraw the panels.

4. Carefully prise each windscreen outlet vent from the fascia.

5. Remove the screws at each end securing the fascia capping panel, and withdraw the panel.

6. Remove the plastic finisher above the climate controls. Remove the four screws securing the top flange of the dash extrusion to the underside of the fascia top.

7. Lift the rear of the fascia top to release the two locating bosses from the keyhole slots in the dash, and pull the fascia rearwards to withdraw the two front edge spigot pins.

8. If the demist ducting is found to have become detached, or loose from the facia top foam moulding, the duct should be refixed as follows:
   - Remove any fixing screws, separate the duct from the fascia and remove any glue from the ducting.
   - Roughen the bonding surface of the fascia with sand paper and clean and degrease with Betaclean 3900 or Acetone. Similarly clean and degrease the bonding surface of the demist duct.
   - Prime bonding surfaces with Betaprime 5404 and bond with Betaseal 1701 or similar one component polyurethane adhesive.

Downloaded from www.Manualslib.com manuals search engine

Non-Airbag Type

pl1405mt

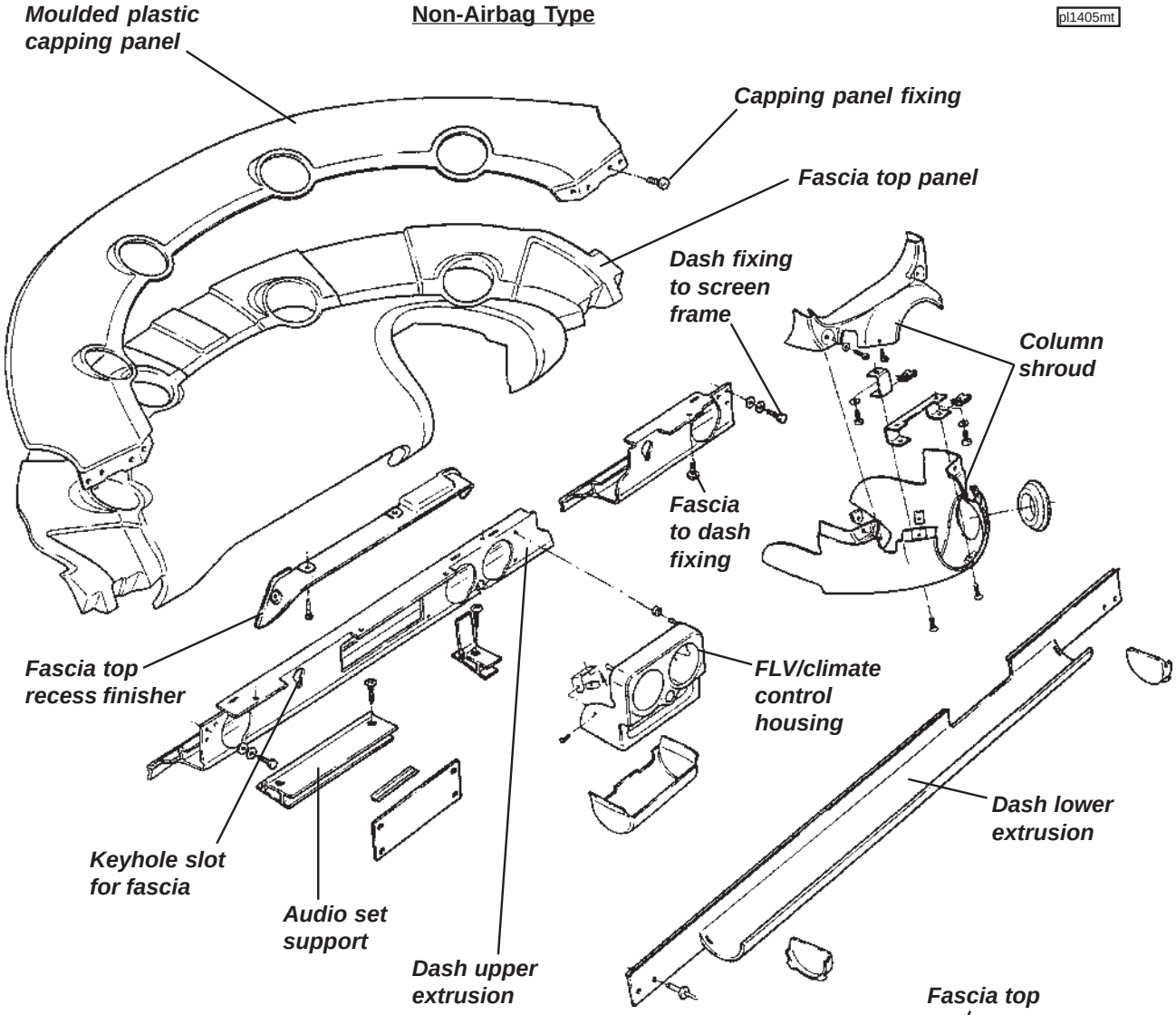

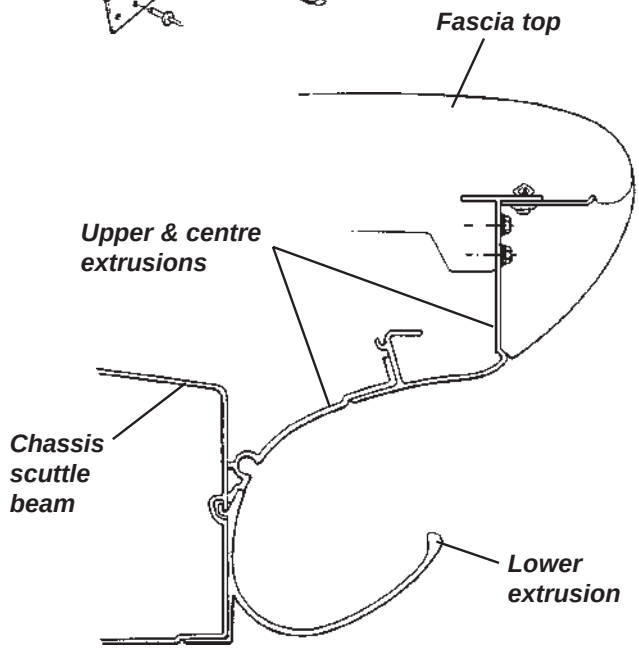

b202a

Downloaded from www.Manualslib.com manuals search engine

Airbag Type

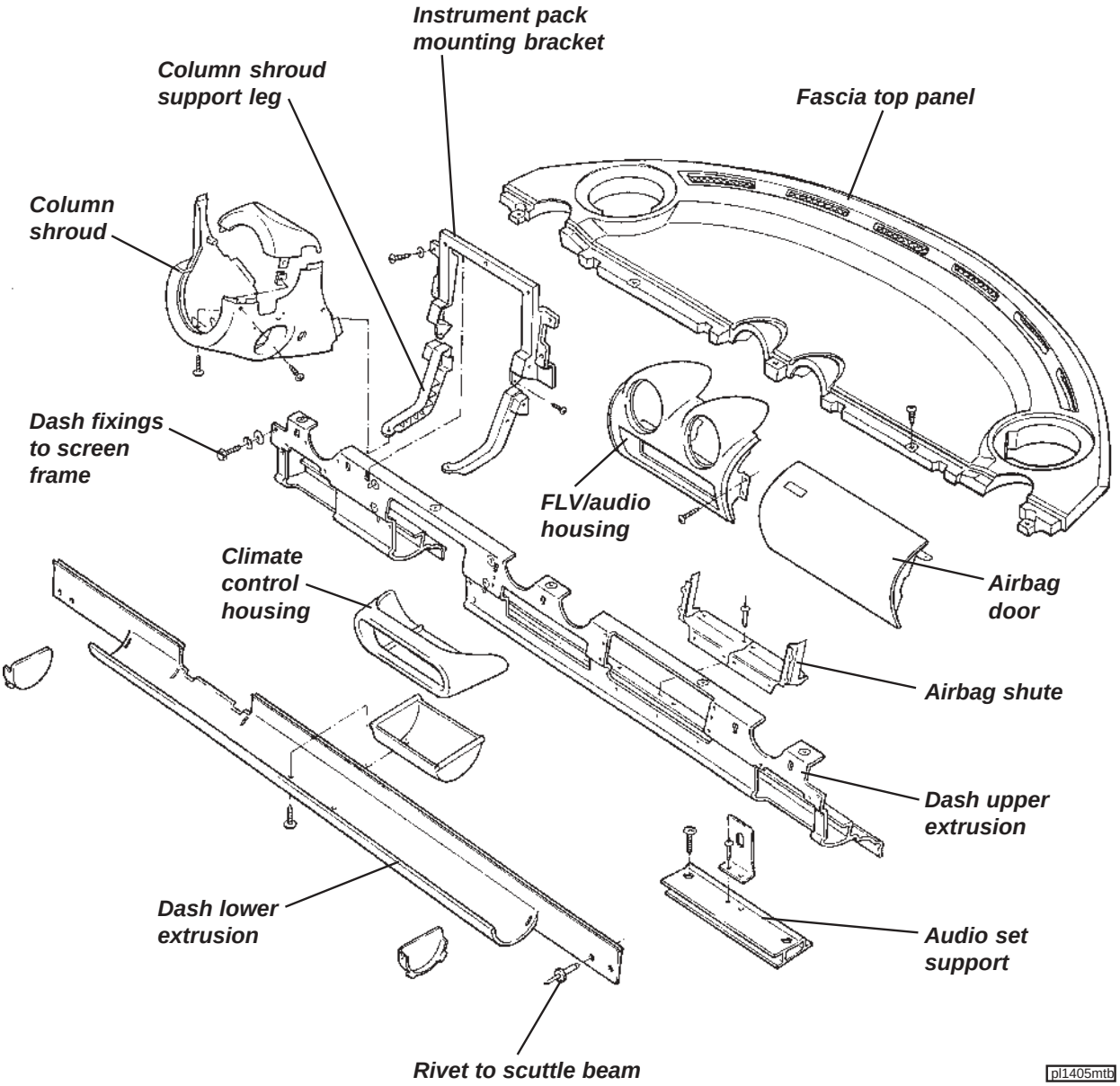

Downloaded from www.Manualslib.com manuals search engine

To Remove Fascia Top Panel - airbag cars

WARNING: The airbag Sensor & Diagnositic Module can maintain sufficient voltage to cause an airbag deployment for up to 20 seconds after the battery has been disconnected. Before working on the airbag system, or in close proximity to an airbag, first take the following precautions to disable temporarily the airbag system:

a. Turn off the ignition.
b. Before disconnecting the battery, use the Lotus Scan tool to read any stored trouble codes.
c. Disconnect the negative (earth) lead from the battery and tape back to ensure that no contact with the battery negative terminal can be made.
d. Wait for 30 seconds.
e. If working on or near the steering wheel, locate the yellow harness connector alongside the steering column near the column upper fixing. Unplug this connector. Note that the connector is fitted with 'shorting bars' which automatically interconnect the high and low terminals of the airbag to prevent accidental deployment caused by a voltage differential.

When service work has been completed, reconnect the harness plug and secure with its locking feature, and reconnect the battery. Ensure the airbag tell tale lights for a few seconds with ignition and then goes out.

1. Column shrouds: Remove the two screws retaining the top part of the shroud, and the four screws retaining the lower part, and withdraw both parts from the column.

2. Instrument shroud: Pull the instrument shroud backwards to release the four spring clips from their apertures in the dash panel.

3. Sill top trims: Release the two screws at the bottom of the coin pockets at the front of each sill, and pull the sill top trim panels from the chassis.

4. Dash end panels: Release the two screws within the top of each coin pocket, and withdraw the switch panel (driver's side) and blanking panel (passenger side) from the dash end panel. Unplug the wiring harness from the switch panel.
From within the aperture, release the two screws retaining each end panel to the dash, and pull the panel rearwards to withdraw the spring clips in the top of the panel from the dash.

5. Airbag door: Pull the airbag door away from the dash, which action will probably require the four retaining clips to be renewed. Note that the door is constrained by two tether straps.

6. Centre vent panel and radio surround: Release the two screws at each side of the panel and withdraw the panel from its two spring clips.

7. Fascia top panel: Remove the 5 screws securing the rear edge of the panel to the dash rail, and withdraw the panel rearwards to disengage the two spigots from the base of the windscreen surround. Disconnect the speaker cables.

8. Refit in reverse order to removal.

Downloaded from www.Manualslib.com manuals search engine

BR.17 - WINDSCREEN (Parts List 11.01)

The laminated windscreen, together with self coloured synthetic finisher moulded around the top and side edges, is bonded to the composite windscreen mounting frame using Betaseal flexible polyurethane adhesive. It is not practicable to remove a windscreen from a car and then refit the same glass, as removal of the screen will require cutting the surround finisher which is available only as part of a new windscreen assembly.

To Replace Windscreen

Parts required:

Windscreen
Betaseal Kit A075B6158F
Plinth, interior mirror mounting
Plinth Adhesive Kit A116U0194S

1. On non-airbag cars, to minimise the possibility of trim damage, remove the fascia end (speaker) panels, and the fascia top capping panel (around inside base of windscreen).

2. Remove the front clamshell (see sub-section BR.6).

3. Remove the wiper arm from its spindle, and the interior mirror from its plinth.

4. Cut around the whole length of the windscreen surround finisher to allow access to the 'screen adhesive joint. Apply suction handles to the outside surface of the screen.

5. In order to incur the minimum risk of damage to the windscreen composite mounting frame, the preferred method of cutting the windscreen adhesive is by the use of a 'cheese' wire. Protect the visual surface of the windscreen frame with tape before commencing the cutting operation.

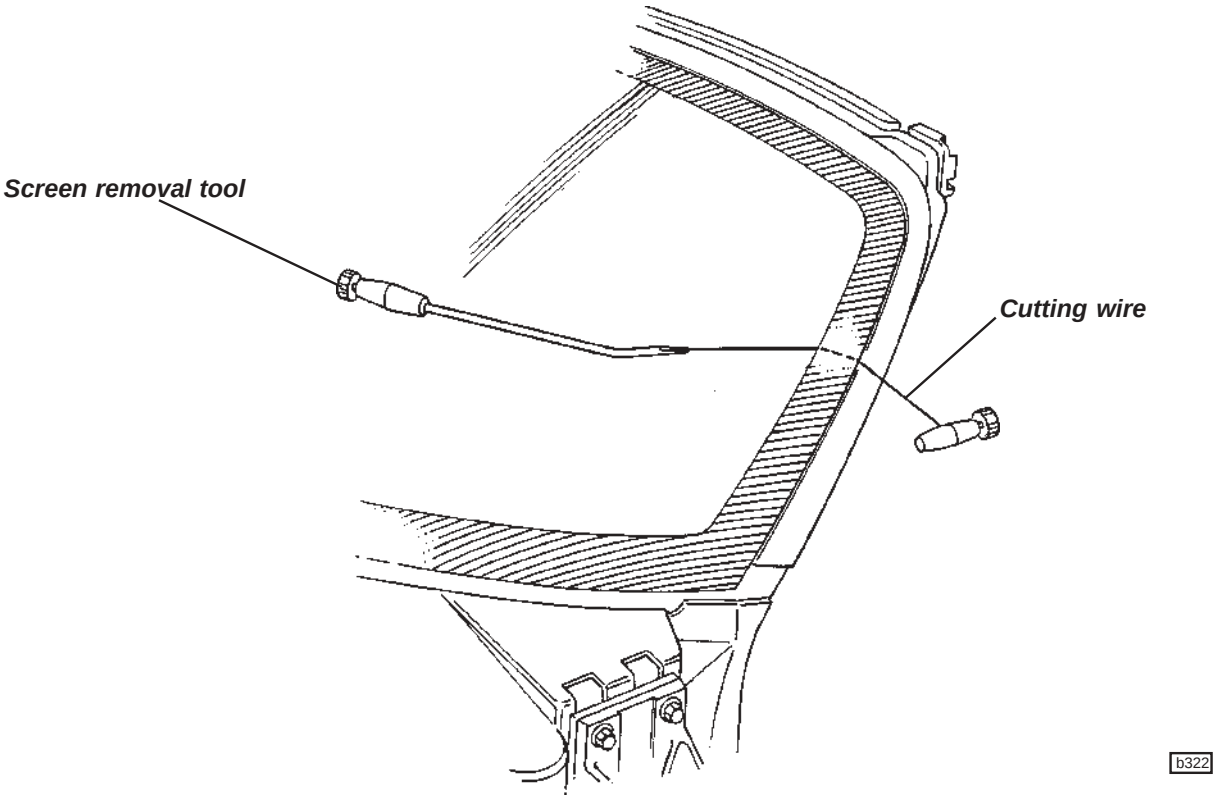

Downloaded from www.Manualslib.com manuals search engine

6. After cutting out the screen, remove old adhesive from the windscreen frame sufficiently to leave a consistent and flat surface for the new bond.

7. Clean the whole of the inside surface of the windscreen with a 50% solution of water and isopropanol. Allow to dry.

8. Fit the interior mirror plinth to the inside of the windscreen using the adhesive kit and instructions supplied.

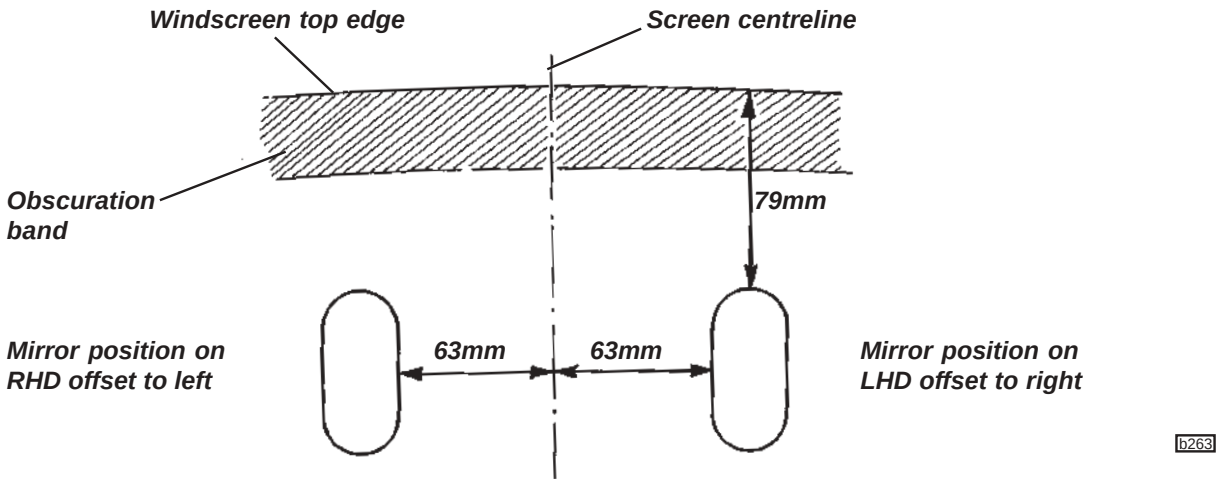

9. Clean the whole of the inside surface of the obscuration band, and the bonding surface on the windscreen frame with the wipe cleaner.

10. Apply a 25 mm wide band of Betaprime around the inside periphery of the glass. Similarly apply to the whole of the bonding surface on the windscreen frame, and to the windscreen bottom laminated edge. Allow to dry for a minimum of 5 minutes. If the screen is not fitted within 48 hours, the primer should be re-applied.

11. Cut the nozzle of the Betaseal cartridge to the dimensions shown to produce a triangular section bead. Holding the cartridge vertically, extrude a bead of adhesive around the screen, using the edge of the finisher as a guide along the top and sides, and following the centreline of the primer band along the lower section.

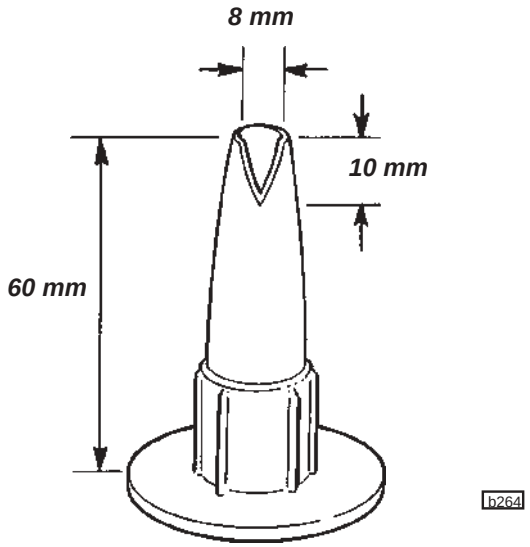

Downloaded from www.Manualslib.com manuals search engine

12. Cut three 4mm spacer blocks from the material supplied in the Betaseal kit, or from rubber or plastic material, and position in the inside edge of the adhesive bead running along the bottom of the class. These spacers are used to control the fitted height of the glass, and the wiper arm clearance.

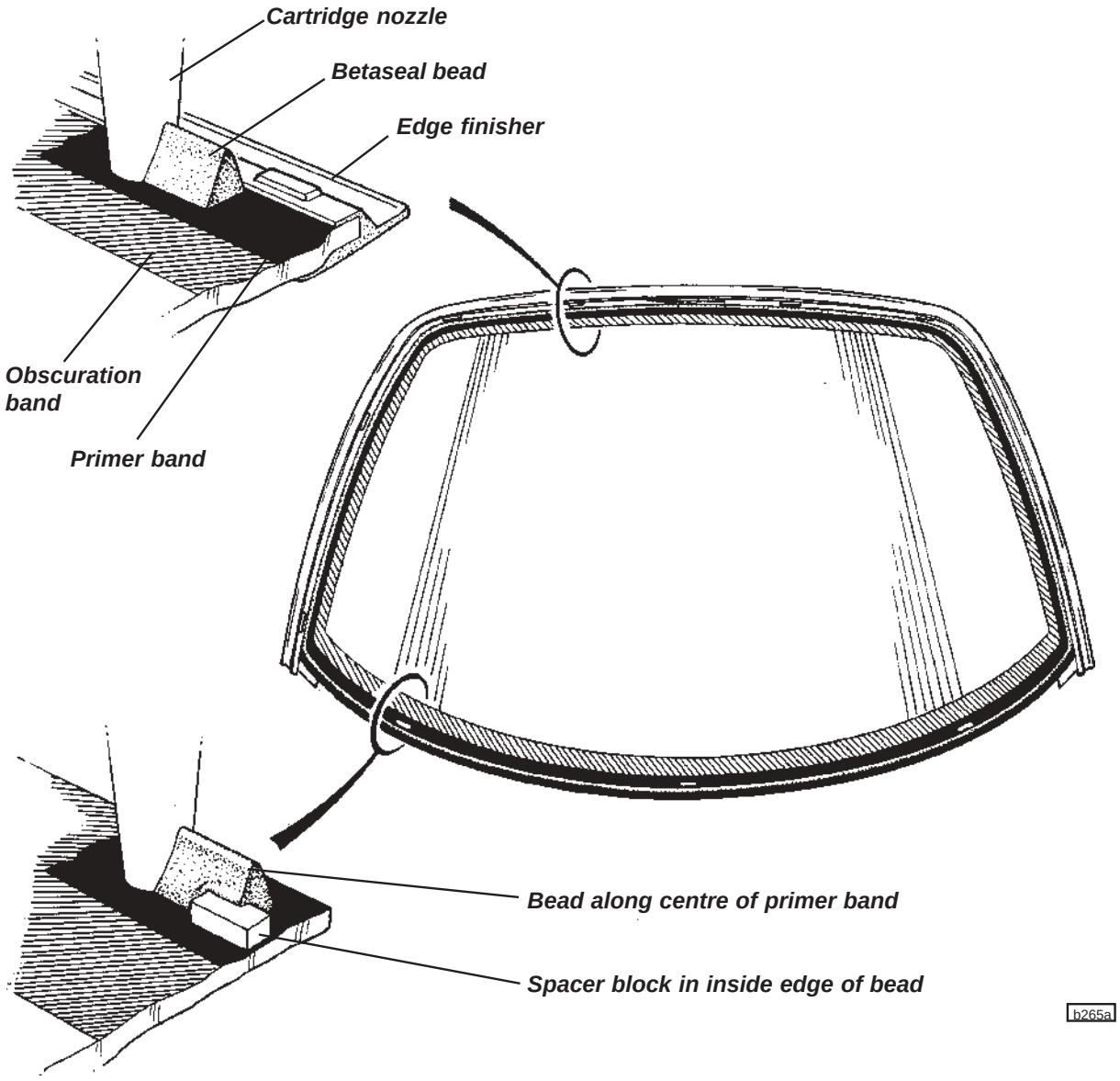

13. Using the suction handles, carefully lower the windscreen onto the frame, with the edge finisher firmly butted against the top and sides off the frame recess. Press around the periphery of the screen to compress the adhesive until contact with the finisher spacers and bottom edge spacer blocks is felt. Carefully examine the integrity of the whole length of the joint, if necessary using a spatula to force extra adhesive into any suspect areas. Wipe off any excess adhesive extruded from the joint, or alternatively, allow the adhesive fully to cure and cut away any excess using a scalpel blade.

14. Use duct tape and/or support blocks to hold the screen in position and do not disturn until the Betaseal is fully cured. This will take approximately 4 hours dependent on atmospheric conditions, with a longer period required in dry atmospheres.

15. Refit wiper arm, interior mirror and front clamshell.

Downloaded from www.Manualslib.com manuals search engine

Spillage of material

a) Any spillage of Betaseal onto unprimed glass can be readily peeled off after it has cured.
b) Any spillage onto the bldy can be removed with either Wipe Cleaner No.4, or white spirit.

Shelf life

a) Betaseal primer has a useful life of about 24 hrs. after exposure to the air, after which it starts to become spongy. If the material is spongy, DO NOT USE. Always use glass primer immediately on opening, and replace the lid after use.
b) Betaseal has a shelf life of over 6 months at ambient temperature in the original unopened package.

Downloaded from www.Manualslib.com manuals search engine

FRONT SUSPENSION

SECTION CI

	Sub-Section	Page
General Description	CI.1	3
Geometry & Adjustments	CI.2	3
Anti-Roll Bar	CI.3	7
Suspension Disassembly/Assembly	CI.4	9
Front Wheel Bearings	CI.5	11

For Super Sport Suspension, see DH.6

Downloaded from www.Manualslib.com manuals search engine

GENERAL LAYOUT

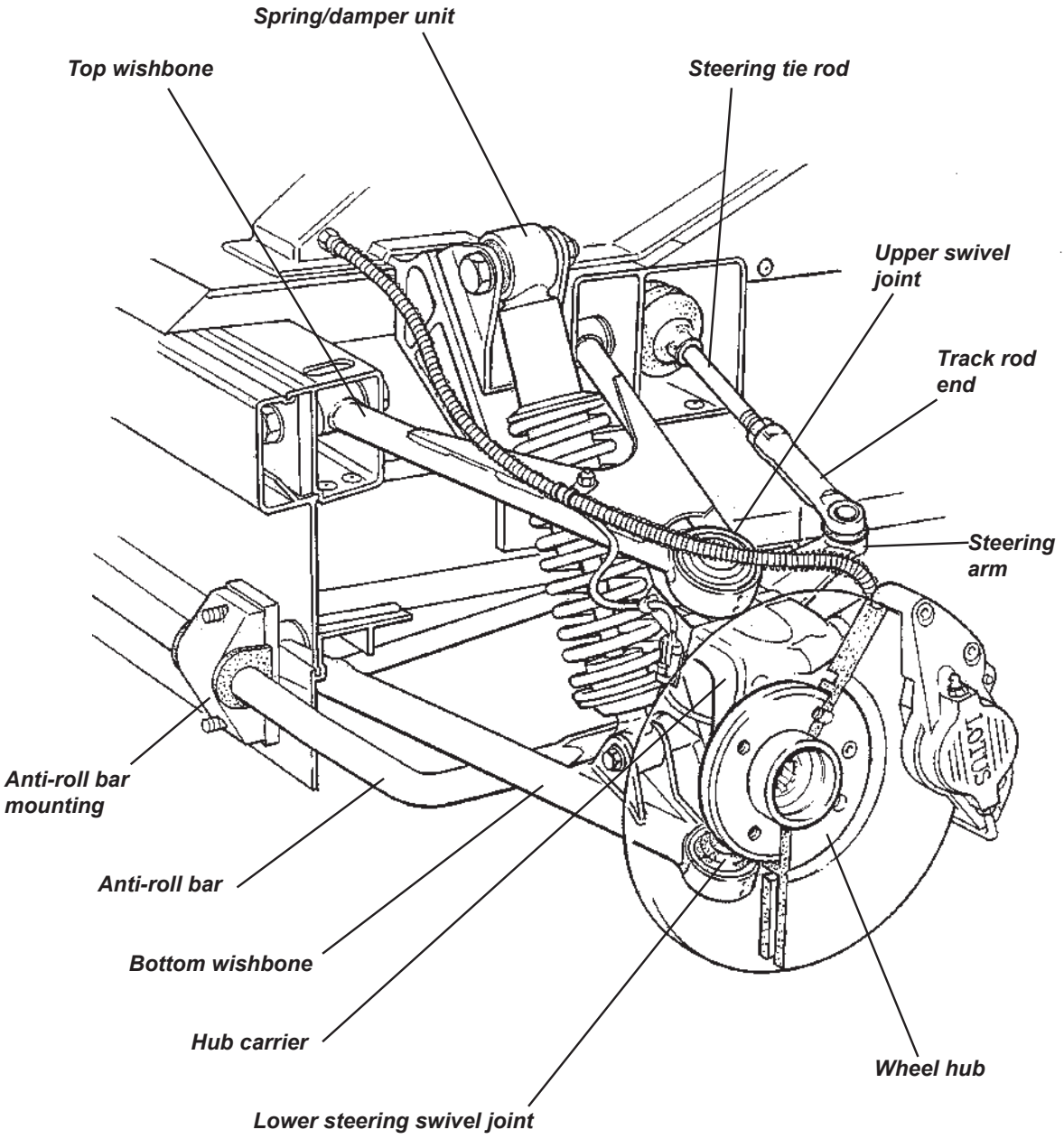

c34b

Downloaded from www.Manualslib.com manuals search engine

CI.1 - GENERAL DESCRIPTION

The fully independent front suspension comprises, on each side of the car, upper and lower wishbones, a concentric coil spring/telescopic damper unit, and a tubular anti-roll bar. A forged steel hub carrier, provides a mounting for a the hub bearing unit to which the road wheel is attached via four spline socket bolts.

The upper and lower 'A' frame wishbones are fabricated from steel tube, the upper wishbone braced by sheet steel gussets at its apex, and the lower wishbone braced by a tubular strut at its base. The inboard ends of both wishbones use replaceable bonded rubber pivot bushes to provide maintenance free articulation, with a specification providing accurate and responsive dynamic characteristics. The outer ends of both wishbones incorporate housings into which the upper and lower steering swivel ball joints are pressed. The upper ball pin is secured to the forged steel, rearward facing steering arm, itself fixed to the hub carrier by two M10 bolts. The ball pin of the lower swivel joint is secured directly into a tapered hole in the bottom of the forged steel hub carrier. The Bilstein spring/damper unit acts between the outer end of the lower wishbone and the chassis, and is fitted with the damper rod lowermost in order to minimise unsprung weight.

A forward mounted tubular steel anti-roll bar, is supported in chassis mounted rubber or hard plastic pivot bushes and is operated via short ball jointed drop links from the lower wishbones.

CI.2 - GEOMETRY & ADJUSTMENTS

Provision is made for the adjustment of wheel alignment, camber and castor. Under normal service conditions, no periodic scheduled check of the geometry is necessary, although a front wheel alignment check is recommended when the front tyres are replaced. A full geometry check is required only after front suspension repair, or if excessive tyre wear is evident, or if steering difficulties are encountered. Before any measurements or adjustments are made it is essential first to set the vehicle to its 'mid-laden' ride height, approximating to driver and passenger and a half tank of fuel. This will require the vehicle to be ballasted, or tied down:

Standard Elise

Mid-laden ride height (reference height for geometry check);

	- front	130 mm below front end of chassis siderail
	- rear	130 mm below rear end of chassis siderail
Camber	- optimum	- 0.1°
	- tolerance	+ 0.1° to - 0.3°; Max side/side 0.2°
Castor	- optimum	+ 3.8°
	- tolerance	+ 3.5° to + 4.1°; max. side/side: 0.35°
Alignment	- optimum	Zero
	- tolerance	0.5 mm toe-out to 0.7 mm toe-in overall (0.07° toe-out to 0.10° toe-in overall)
Steering axis inclination		12° nominal

Sport Elise, Exige

Mid-laden ride height (reference height for geometry check);

- all except USA prior VIN 3013	- front	130 mm below front end of chassis siderail
	- rear	130 mm below rear end of chassis siderail
- USA prior VIN 3013	- front	135 mm below front end of chassis siderail
	- rear	135 mm below rear end of chassis siderail
Camber	- optimum	- 0.3°
	- tolerance	- 0.1° to - 0.5°; max. side/side: 0.2°
Castor	- optimum	+ 3.8°
	- tolerance	+ 3.5° to + 4.1°; max. side/side: 0.35°
Alignment	- optimum	Zero
	- tolerance	0.5 mm toe-out to 0.5 mm toe-in overall (0.07° toe-out to 0.07° toe-in overall)
Steering axis inclination		12° nominal

Downloaded from www.Manualslib.com manuals search engine

Alignment

Wheel alignment refers to the parallelism of the wheels when viewed from above and is crucial to vehicle stability, handling and tyre wear.

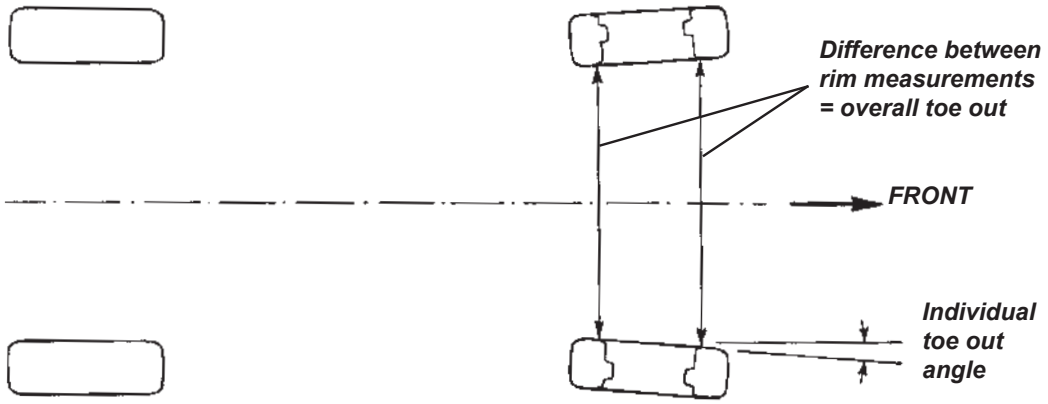

c26

Alignment is measured either by the angle a wheel makes with the vehicle centre line, or the difference in dimension between the wheel rim to wheel rim measurement at the front and rear of the wheel at hub centre height. The wheels are said to 'toe-in' when the wheel paths converge ahead of the vehicle, and 'toe-out' when they diverge. Wheel alignment is designed to vary with both steering angle (Ackerman) and suspension travel (bump steer) and should be measured only 'straight ahead' at the specified ride height.

Front wheel alignment is adjusted be screwing the track rods into or out of the track rod outer end ball joints. In order to preserve the required bump steer characteristic and steering symmetry, the effective length of each track rod must remain equal - adjust each track rod by a similar amount.

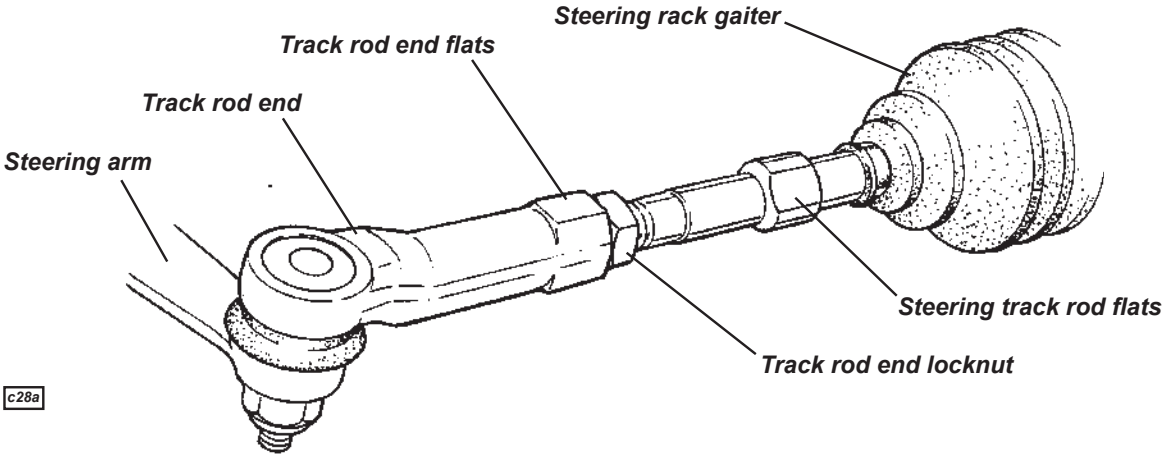

c28a

- Hold the track rod end using the flats provided, and slacken the locknut. Repeat for the opposite side.
- Turn each track rod a similar amount. As a guide, turning both track rods by one quarter of a turn will alter overall toe-out by approx. 2.0 mm.
- When adjustment is correct, hold each track rod end and tighten the locknuts to 80 - 82 Nm (58 - 60 lbf. ft).

When slackening or tightening the track rod end locknuts, it is important that the torque reaction is resisted using the track rod end flats, and that the ball joint itself is not allowed to be stressed.

Downloaded from www.Manualslib.com manuals search engine

Camber Adjustment

Camber is the angle from vertical of the wheel when viewed from the front, and is said to be negative when the wheel leans inwards at the top (positive when leaning outwards). The primary purpose of camber is to achieve the maximum efficiency of the tyre under cornering loads and body roll, with the specification closely allied to a particular wheel/tyre combination. The camber angle changes with suspension travel, becoming more negative on bump, and should be measured only at the specified ride height. Incorrect camber can result in handling deficiencies and excessive tyre wear.

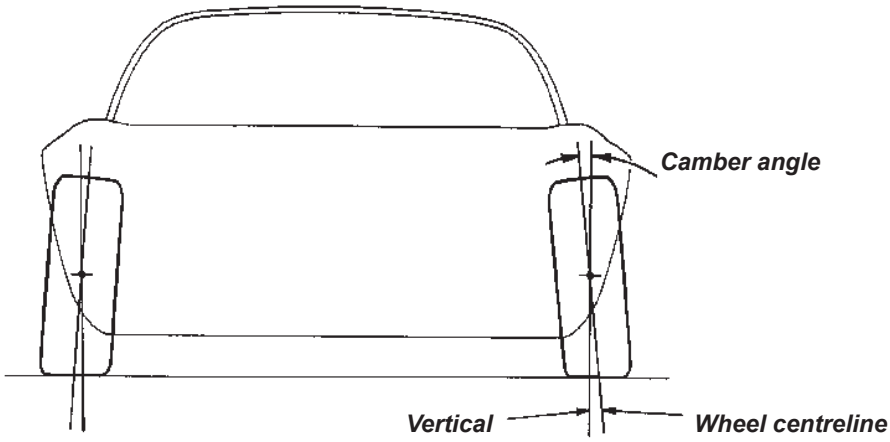

c29

Camber adjustment is effected by adding or deleting shim plates between the steering arm (to which the upper steering swivel joint is fixed) and the hub carrier.

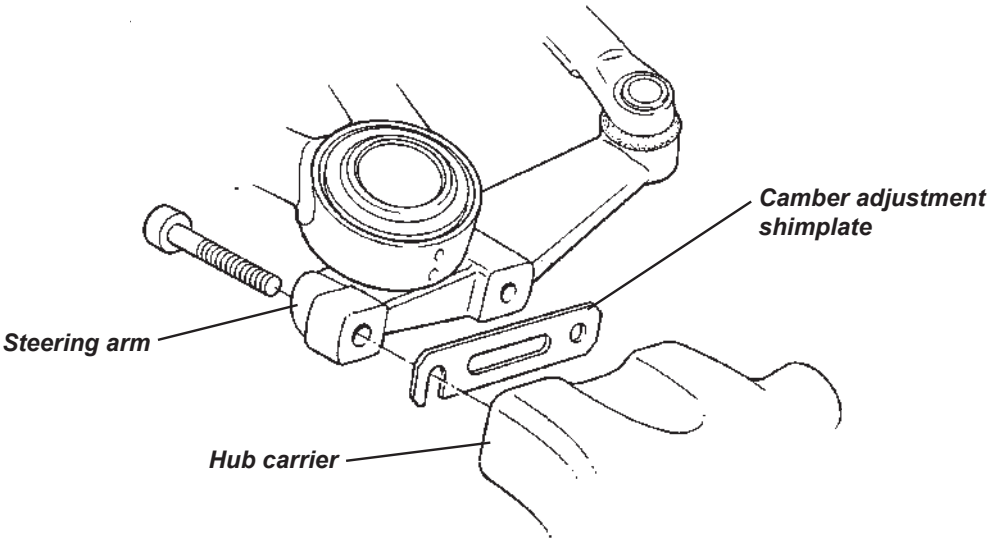

c30a

- Shimplates are available in 1mm and 3mm thicknesses.
- Reducing the shim pack thickness will increase negative camber. Adding shims will reduce negative camber.
- A 1mm shim plate will alter camber by approximately 0.25°.
- In March '04 the caphead bolts securing the ball joint plinth to the hub carrier were upgraded from 8.8 to 10.9 grade, with a corresponding increase in torque from 45 to 68 Nm. Before fitting these bolts, inspect the cap head for the grade marking, apply Permabond A130 (A912E7033) to the threads, and torque tighten to the appropriate figure.

Downloaded from www.Manualslib.com manuals search engine

Castor Adjustment

Castor is the angle from vertical of the steering axis of the wheel when viewed from the side. Its primary purpose is to provide a natural straight running tendency of the steered wheels with forward vehicle motion. Castor angles have a complex interaction with other steering geometries and if unbalanced or outside of specification, can result in various stability and handling deficiencies.

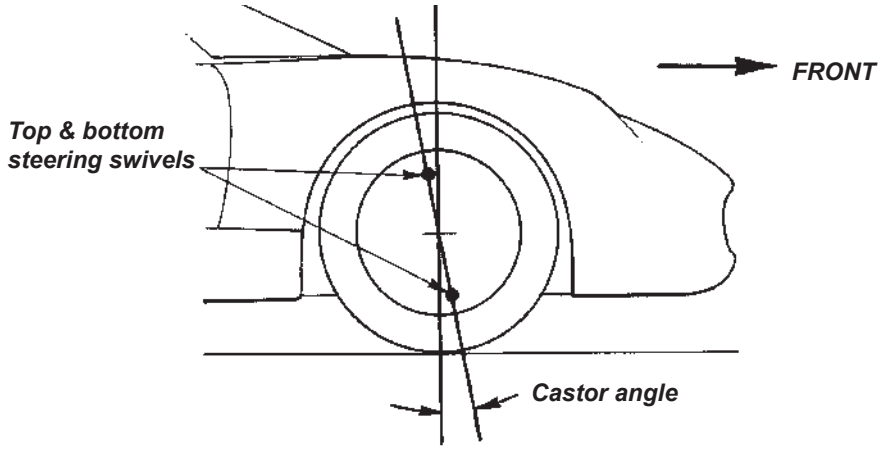

c27

The wishbone pivot bushes are bonded rubber type with a plastic flanged outer sleeve, a plain steel inner sleeve, and a plastic interleaf sleeve within the rubber bush to control the flexing characteristic. The top wishbone rear bush, identified by a blue paint mark, has no interleaf sleeve.

The top wishbone pivots are sandwiched between the walls of transverse chassis box sections, the pick up points in which are reinforced either with machined inserts, or in the case of the foremost position, a thick alloy plate, each being bonded to the chassis with epoxy adhesive. Spacer washers are fitted ahead of and behind each of the top wishbone pivot bushes to allow the wishbone to be displaced forwards or backwards, with an associated change of castor angle. A rubber faced snubber washer fitted against the rear face of the top wishbone front bush prevents metal to metal contact under extreme braking forces. The spacer washers may be re-distributed between the front and rear of each pivot bush but the snubber washer position, and the total shim pack thickness of 4 x 1.5mm at each pivot (inc. the 1.5mm snubber washer) must remain unchanged.

Top Wishbone Inboard Fixing

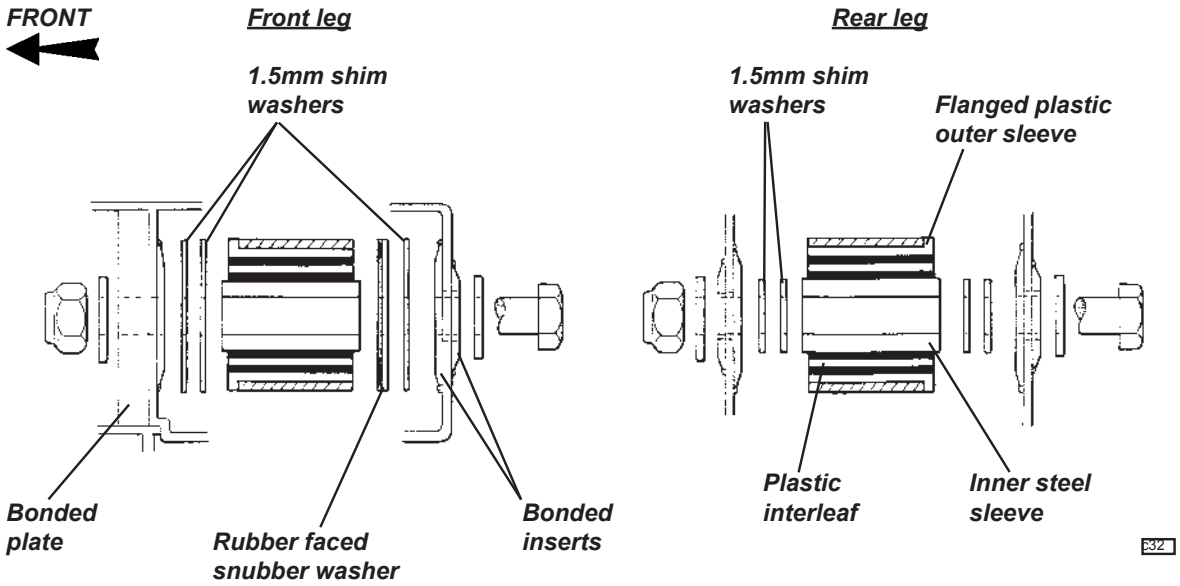

c32

Downloaded from www.Manualslib.com manuals search engine

Notes

- Shim distribution at the front bush of either wishbone must be copied at the rear bush of that wishbone.
- Transferring a 1.5mm shim washer from ahead of, to behind the pivot bushes, will **reduce** castor by approximately 0.4°.
- Transferring a 1.5mm shim washer from behind, to ahead of the pivot bushes, will **increase** castor by approximately 0.4°.
- Ensure that the load spreading washers are correctly located beneath the bolt heads and nuts as shown in the drawings.
- Ensure that the pivot bolts are tightened only with the vehicle at ride height. Torque to 45 Nm.

CI.3 - ANTI-ROLL BAR

Three types of anti-roll bar and chassis mounting have been used:

1. The standard tubular steel anti-roll bar is mounted in pivot bushes onto the front face of the chassis, and is linked to the outboard ends of each lower front wishbone via short ball jointed links. The bar is mounted to the chassis using rubber pivot bushes for noise isolation, retained by alloy clamp brackets. Washers welded to the bar bear against the inner sides of the bushes to provide lateral location of the bar. Castrol LMX rubber grease, or equivalent, should be used when fitting the rubber bushes onto the anti-roll bar.

Anti-Roll Bar Mounting - Rubber

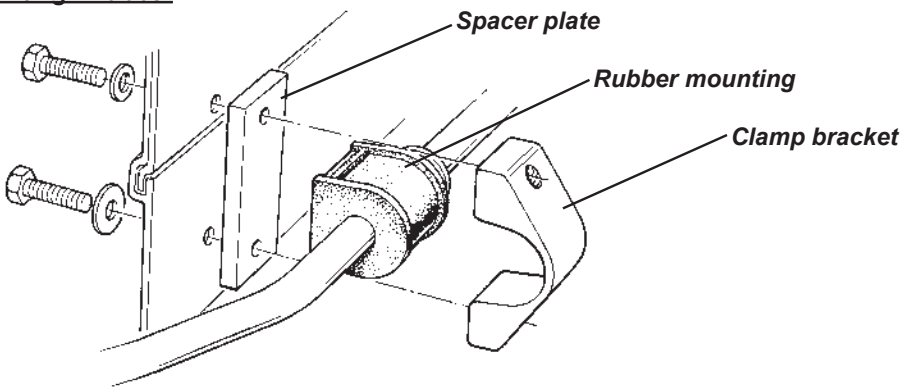

c40

2. On Elise and Exige models built with 'Super Sport' suspension prior to August '06, a stiffer adjustable bar is used with 5 holes in each end to allow some adjustment of roll stiffness to be made. Standard setting is centre hole. Using a more forward hole increases stiffness. Two hard plastic clamping blocks secure the bar to the chassis via the front lower wishbone inboard front pivot bolts, with 'top hat' section steel spacers preventing the clamps from being crushed. An M5 bolt is used to close the bottom of each clamp.

Anti-Roll Bar Mounting - Hard 1

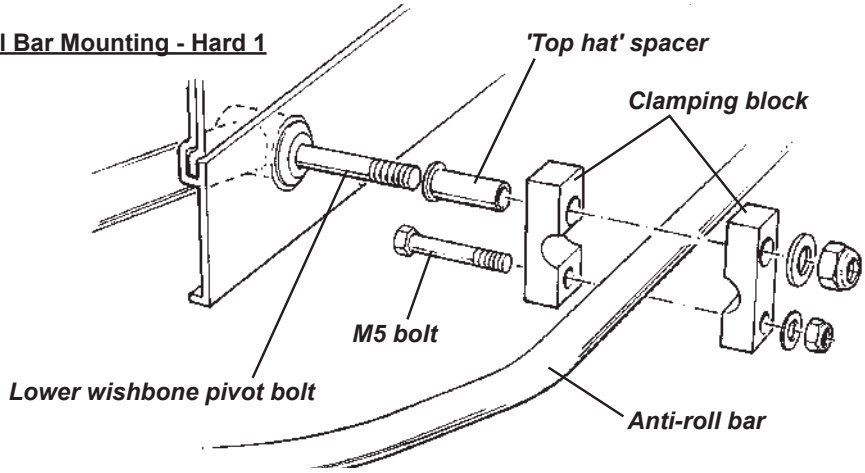

c40a

Downloaded from www.Manualslib.com manuals search engine

These hard type mountings provide optimum steering response but will transmit more noise and require periodic lubrication with MoS_2 grease at 3,000 mile (5,000 km) intervals. Noise from excessive clearance may be ameliorated by judicious shaving of the clamping block faces.

2. Elise and Exige models built with 'Super Sport' suspension from August '06, use a yellow painted, standard rate, 5-hole adjustable bar, sharing the chassis mounting higher position of the standard bar but using hard plastic bushes housed in alloy clamps. Each split pivot bush incorporates a raised shoulder around its centre in order to engage with a groove in the two part clamp, and provide lateral location of the bush. A pip on this shoulder locates in a hole in the clamp cap to prevent rotation of the bush. No lubrication is required. These hard bushes benefit dynamic response at some penalty to refinement.

Anti-Roll Bar Mounting - Hard 2

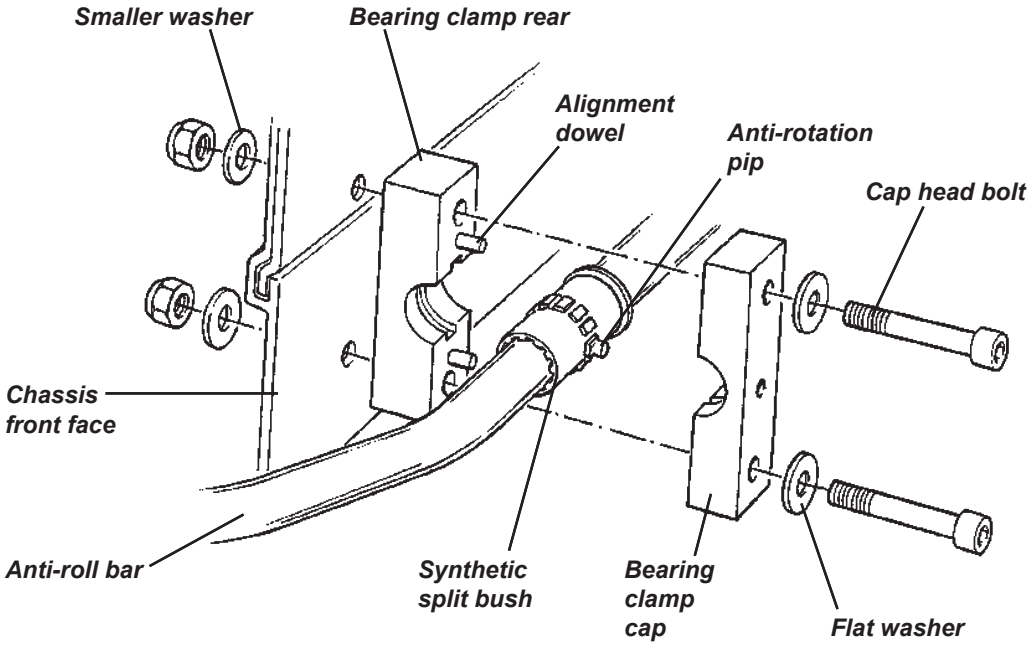

Anti-Roll Bar Drop Link

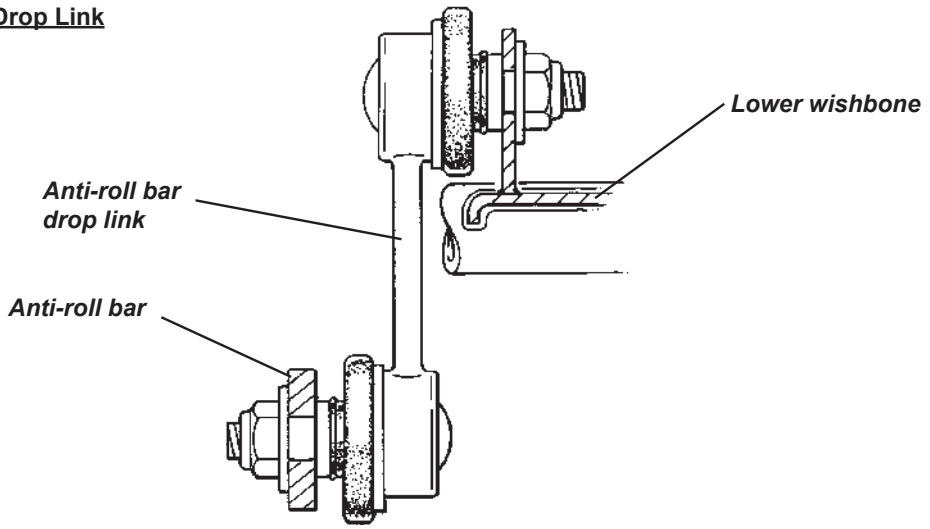

Downloaded from www.Manualslib.com manuals search engine

CI.4 - SUSPENSION DISASSEMBLY/ASSEMBLY

The suspension may be disassembled without the use of any special tools other than a 'Torx' socket for the hub bearing carrier bolts, and a spring compressor, required only if the spring is to be removed from the damper unit. With the car on a wheel free lift and with the front wheels removed:

1. Remove the wheelarch liner(s) as appropriate.

2. Remove the two bolts securing the brake calliper to the hub carrier, release the flexible hose from the top wishbone, and support the calliper aside without straining the brake hose. Release the single countersunk screw, and remove the brake disc.

3. Remove the nut securing the track rod end into the steering arm, and use a ball joint splitter to separate the rod end from the arm.

4. Remove the nut securing the top swivel joint to the steering arm, and use a ball joint splitter to separate the joint from the arm. Remove the two M10 fixing bolts and remove the steering arm from the hub carrier, taking care not to misplace the camber adjustment shim plates.

5. Remove the nut securing the lower swivel joint to the hub carrier, and use a ball joint splitter to separate the ball pin from the carrier.

6. Remove the bolts securing the spring/damper unit to the lower wishbone and chassis anchor bracket, and withdraw the unit, noting the spacer washers fitted at the top end.

7. Disconnect the anti-roll bar drop link from the lower wishbone, and remove the lower wishbone front pivot bolt.

8. Remove the lower wishbone rear pivot bolt from within the cabin footwell, and withdraw the wishbone.

9. Before removing the two pivot bolts for the top wishbone, take careful note of the distribution of castor adjustment washers. Move the steering rack to full lock to provide clearance for the withdrawal of the wishbone rear pivot bolt. Withdraw the wishbone.

10. The wishbone pivot bushes comprise a rubber bush bonded to a steel inner sleeve and a flanged plastic outer sleeve. The bushes may be pressed out of the wishbone eyes, and new bushes fitted using suitable press tool dollies. Smear the outer surface of the new bush with IPC 'P-80' rubber lubricant emulsion (A082C6042V) to ease fitment, and assemble as follows:
    Top wishbone - insert from the outside of both pivot eyes (from front of front eye, and rear of rear eye).
    Lower wishbone - insert from the inside of both pivot eyes (from rear of front eye, and front of rear eye).
    Note that all top wishbone pivot bushes are common with the exception of the top wishbone rear pivot, which contains no interleaf sleeve and is identified by a blue paint mark.

11. Top and bottom swivel joints are identical, and may be replaced if necessary using a suitable press.

12. If the anti-roll bar is to be removed; remove the front alloy undertray, and, by drilling out the rivets, the small alloy closing panel at each side of the crash structure below the anti-roll bar. Release the a.r. bar clamps and drop links, and withdraw the bar.

13. The road spring may be removed from the damper using a suitable spring compressor to allow the spring lower slotted seat to be withdrawn. Note that spring upper seat is located by a square section circlip on the damper body:
    - Standard Elise: Use centre of 3 grooves for mid-laden ride height of 130mm.
    - USA Elise: Use lower of 3 grooves for mid-laden ride height of 135mm.
    - Elise with sports suspension package and non-USA Exige: Use the upper of 2 grooves for mid-laden ride height of 130mm.

14. To remove the hub bearing unit from the hub carrier, release the three Torx head bolts and withdraw the complete unit. The hub unit is not serviceable, and is replaced complete if faulty.

Downloaded from www.Manualslib.com manuals search engine

Reassembly

Re-assemble the suspension in reverse order to disassembly with the following notes:

- Take care to assemble each pivot bolt with the correct washers/snubbers/spacers as shown in the diagrams.
- Smear the shank of each pivot bolt with PBC grease, but do not allow contamination of the threads.
- Take care to refit the original camber adjustment shimpack, and distribute the castor shims as noted on removal.
- Top ball joint plinth fixing bolts:
  The bolts securing the steering arm/top ball joint plinth to the hub carrier were upgraded in March '04 at VIN serial number 1537 (approx.) in order to commonise with motorsport applications. Earlier type 8.8 grade bolts should be tightened to 45 Nm; Later 10.9 grade bolts to 68 Nm. The bolt grade is stamped around the head of the bolt. The thread of both bolt types should first be treated with Permabond A130 (A912E7033V).
- After re-fitting a standard anti-roll bar, ensure that the crash structure closing panels are re-riveted.
- Lubricate the rubber type anti-roll bar mountings with rubber grease and the Nylon type with MoS_2 grease.
- Apply Permabond A130 (A912E7033V) to the threads of the steering arm bolts.
- Lubricate the ends of the damper top eye bush with rubber grease.
- Press the brake pedal to reposition the pads before driving the car.
- If the car suffers a suspension impact sufficient to damage a wheel rim, careful attention should be paid to all related suspension components. Such forces can cause stretching of the lower ball pin and consequent fixing nut torque loss. As a safety precaution, it is recommended that in all such cases, the lower ball joint and the two bolts securing the upper ball joint plinth to the hub carrier are renewed.

The Service Schedule specifies that the security of the front and rear suspension is checked at each service. For cars used on race tracks, or in similar conditions, suspension components and torque checks should be carried out between sessions. This operation requires that all the principal suspension pivot bolts are torque checked, noting the following points:

Where a bolt is tapped into a housing or weldnut, and relies on a thread locking compound for security, it is important to appreciate that if the bolt is disturbed, the locking compound must be re-applied. The following procedure should be adopted for all such fixings:

- Check the torque of the fixing.
- If the specified torque is attained without the fixing being disturbed (moving), take no further action.
- If the bolt moves, the locking action of the thread adhesive will have been compromised. Remove the bolt completely, clean off all old adhesive using a wire brush and acetone, and apply new adhesive as specified.
- Refit the bolt and tighten to the specified torque.
- If for any reason a bolt is found to have become loose, and the car has been operated for any period in this condition, the bolt should be renewed as a standard precaution and related components carefully inspected for hole ovality or wear.

Torque Settings:		Nm
Upper and lower wishbone pivot bolts		45
Upper swivel joint to steering arm		55
Lower swivel joint to plinth		55
Steering arm to hub carrier	- 8.8 grade	45
	- 10.9 grade	68
Track rod end to steering arm		30
Damper to lower wishbone		45
Damper to top anchor bracket		45
Damper anchor bracket to chassis		25
Hub bearing unit to hub carrier		90
Brake calliper to hub carrier		45
Anti-roll bar alloy mounting clamps		25
Anti-roll bar drop links		45

Downloaded from www.Manualslib.com manuals search engine

CI.5 - FRONT WHEEL BEARINGS

The sealed front wheel bearings are contained in a steel housing secured to the hub carrier with three 'Torx' bolts. The double row, angular contact, ball bearing is retained in the outer housing and also onto the hub spigot by a shoulder and a peening operation, and is inseparable for service. Note that all four hub assemblies are common, and incorporate a wheel speed sensor in the bearing unit, with a flying lead terminating in an electrical connector plug secured by a camber shim plate bracket.

If there is found to be any discernible free play in the hub bearing, or any roughness or tight spots can be felt, or any signs of lubricant expulsion are evident, the hub assembly should be replaced - there is no provision for adjustment.

To Replace Hub Bearing Assembly

1. With the wheel removed, release the two fixing bolts, and remove the brake calliper from the hub carrier. Support clear of the brake disc without straining the flexible hose. Release the single countersunk screw and withdraw the brake disc from the hub.

2. Using a Torx socket, release the three bolts securing the hub bearing unit to the hub carrier.

3. Fit the new hub bearing unit to the hub carrier and retain with the three Torx bolts. Torque tighten to 90 Nm.

4. Refit the brake disc and calliper, using Permabond A130 (A912E7033) to the threads of the calliper fixing bolts and torque tightening to 45 Nm. Pump the brake pedal to reposition the pads before driving the car.

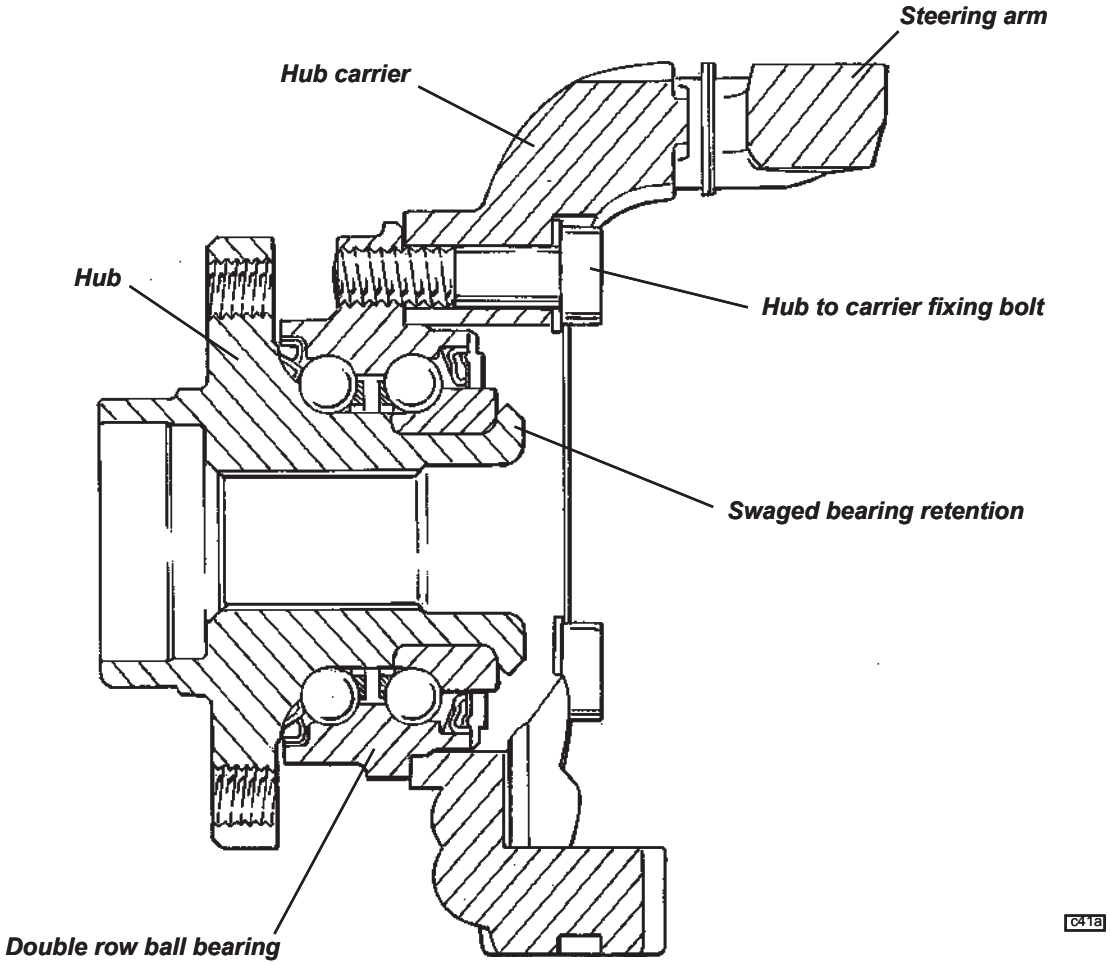

Downloaded from www.Manualslib.com manuals search engine

REAR SUSPENSION

SECTION DH

	Sub-Section	Page
General Description	DH.1	3
Geometry & Adjustments	DH.2	3
Suspension Disassembly/Assembly	DH.3	6
Rear Wheel Bearings	DH.4	9
Track Use Chassis Rear Brace Kit	DH.5	11
Super Sports Suspension Package	DH.6	14

Downloaded from www.Manualslib.com manuals search engine

Rear Suspension Layout

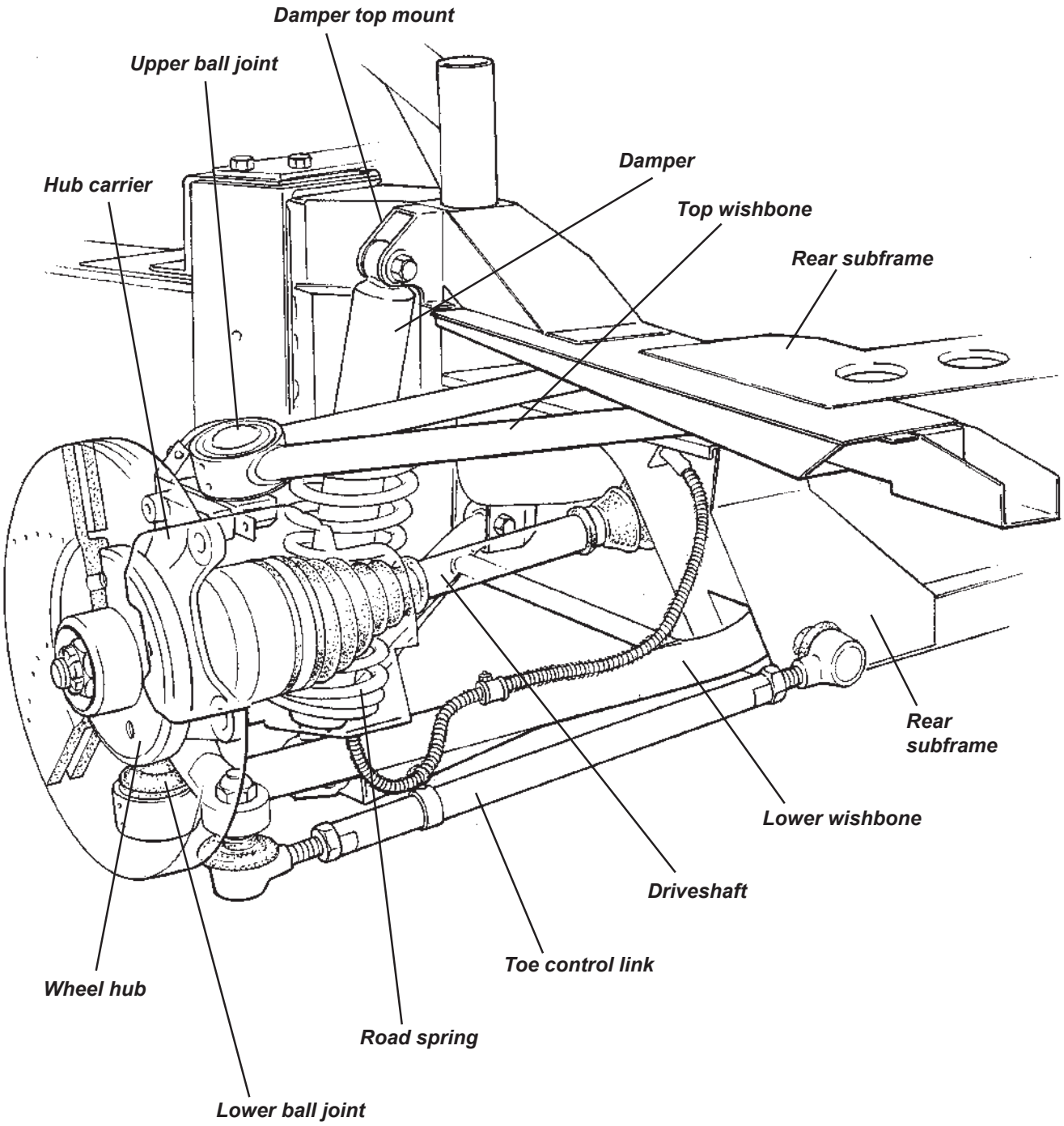

d20b

Downloaded from www.Manualslib.com manuals search engine

DH.1 - GENERAL DESCRIPTION

The fully independent rear suspension comprises, on each side of the car, upper and lower tubular steel wishbones, a toe control link, and a concentric coil spring/telescopic damper unit linked between the outboard end of the lower wishbone and the chassis. A forged steel hub carrier, provides a mounting for the hub bearing unit to which the road wheel is attached via four spline socket bolts.

The upper and lower 'A' frame wishbones are fabricated from steel tube, with the inboard ends of both wishbones using replaceable bonded rubber pivot bushes to provide maintenance free articulation, with a specification providing accurate and responsive dynamic characteristics, with some suppression of noise and vibration. The two legs of the top wishbone pick up on the chassis rear subframe, and converge outboard and forwards to a ball joint housing into which is pressed a ball swivel joint. The ball pin of this joint locates in a forged steel plinth which is itself secured to the hub carrier using two horizontally disposed M10 bolts. The braced, wide based, lower wishbone, is anchored at its front inboard end to the chassis rear crossmember via a steel bracket, and at its rear inboard end to the chassis rear subframe. The two legs converge outboard and rearwards to a ball joint housing which accommodates another swivel ball joint, the ball pin of which is secured directly into a tapered hole in the forged steel hub carrier. The Bilstein telescopic damper with concentric coil spring, is fitted with the damper rod lowermost to minimise unsprung weight, and acts between the outer end of the lower wishbone and an anchorage on the steel subframe.

The adjustable length, double ball jointed, toe control link, shares a subframe anchorage with the rear pivot of the lower wishbone, and at its outboard end, is secured directly into a tapered hole in a rearward integral extension of the hub carrier.

The forged steel hub carrier provides a mounting for a hub bearing unit, which is secured by three 'Torx' head bolts and incorporates a wheel speed sensor for the anti-lock brake system, engine management and speedometer data.

DH.2 - GEOMETRY & ADJUSTMENTS

Provision is made for the adjustment of wheel alignment and camber. Under normal service conditions, no periodic scheduled check of the geometry is necessary, with a full geometry check required only after suspension repair, or if excessive tyre wear is evident, or handling deficiencies encountered. Before any measurements or adjustments are made, it is essential first to set the vehicle to its 'mid-laden' ride height, approximating to driver and passenger and a half/full tank of fuel. This will require the vehicle to be ballasted or tied down:

Standard Elise

Mid laden ride height (reference height for geometry check);

- all except USA prior VIN 3013	- front	130 mm below front end of chassis siderail
	- rear	130 mm below rear end of chassis siderail
- USA prior VIN 3013	- front	135 mm below front end of chassis siderail
	- rear	135 mm below rear end of chassis siderail
Camber;	- optimum	- 1.8°
	- tolerance	- 1.6° to - 2.0°; max. side/side: 0.2°
Alignment;	- optimum	1.2 mm (0.16°) toe-in each side
	- tolerance	1.2 to 1.8 mm toe-in each side
		(0.16° to 0.24° toe-in each side)
		Max. difference side/side: 0.3 mm (0.04°)

Roadsport Elise, Exige (for Super Sport suspension see sub-section DH.6)

Mid laden ride height (reference height for geometry check);

	- front	130 mm below front end of chassis siderail
	- rear	130 mm below rear end of chassis siderail
Camber;	- optimum	- 1.8°
	- tolerance	- 1.6° to - 2.0°; max. side/side: 0.2°
Alignment;	- optimum	1.5 mm (0.20°) toe-in each side
	- tolerance	1.2 to 1.8 mm toe-in each side
		(0.16° to 0.24° toe-in each side)
		Max. difference side/side: 0.3 mm (0.04°)

Downloaded from www.Manualslib.com manuals search engine

Alignment

Wheel alignment refers to the parallelism of the wheels when viewed from above and is crucial to vehicle stability, handling and tyre wear. It is measured either by the angle a wheel makes with the vehicle centre line, or the difference in dimension between the wheel rim to wheel rim measurement at the front and rear of the wheel at hub centre height. The wheels are said to 'toe-in' when the wheel paths converge ahead of the vehicle, and 'toe-out' when they diverge. Rear wheel alignment should be measured only using equipment which measures **individual** rear wheel alignment reletive to the car centreline. Wheel alignment is designed to vary with suspension travel ('bump steer') and the base setting should be measured only at the specified mid laden ride height.

It is possible to accurately measure individual wheel alignment using a pair of long straight bars or round section elastic in conjunction with 4 axle stands or similar. Any bars used must be longer than the length of the car, and be suitably stiff and straight.

Set up the bars or elastic on each side of the car at wheel centre height as shown an the diagram, so that A = A, B = B and C = C.

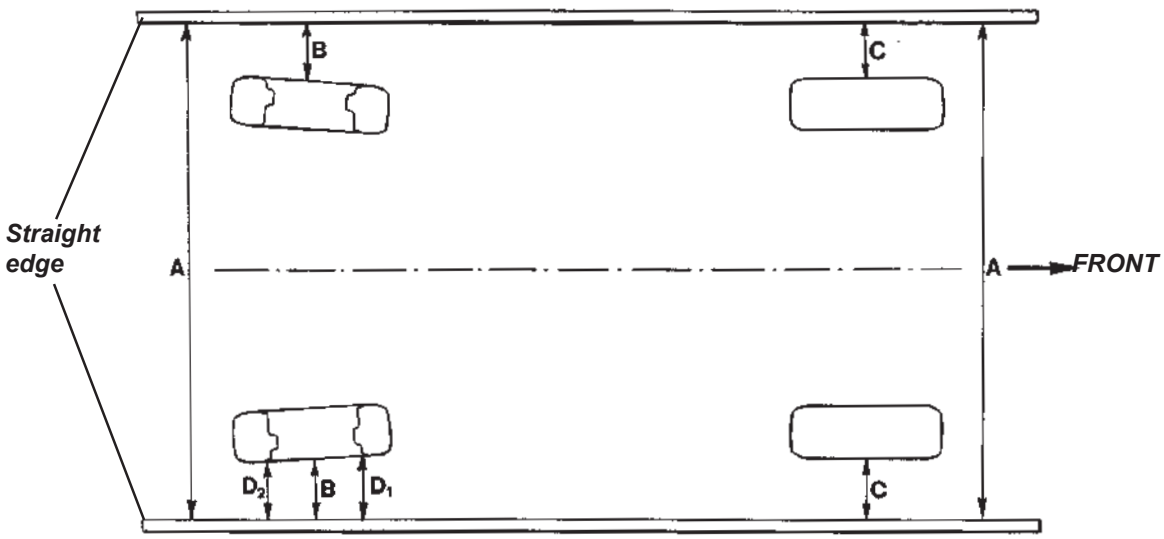

d21

Measure the distance from the bar to the rim of the wheel concerned at the front and rear of the centre line of the wheel (D_1, D_2). If the front dimension, D_1, is greater than the rear dimension, D_2, the wheel has TOE-IN. If the rear dimension is greater than the front dimension, the wheel has TOE-OUT. The difference between the two measurements is the amount the wheel has toe-in or toe-out.

Wheel alignment is adjusted via the toe control link which is equipped with a left hand threaded ball joint at the inboard end, and a right hand threaded ball joint at the outboard end. Slacken both ball joint locknuts, and turn the link rod as necessary to increase or decrease the effective length of the link. As a guide, lengthening the link rod by a turn of one 'flat' (one sixth of a turn) will increase toe-in by approximately 1mm.

After adjustment, tighten the two locknuts to 55 Nm taking care to ensure that the ball joint sockets are aligned at 90° to each other to allow some free articulation.

Downloaded from www.Manualslib.com manuals search engine

Camber Adjustment

Camber is the angle from vertical of the wheel when viewed from the rear, and is said to be negative when the wheel leans inwards at the top (positive when leaning outwards).

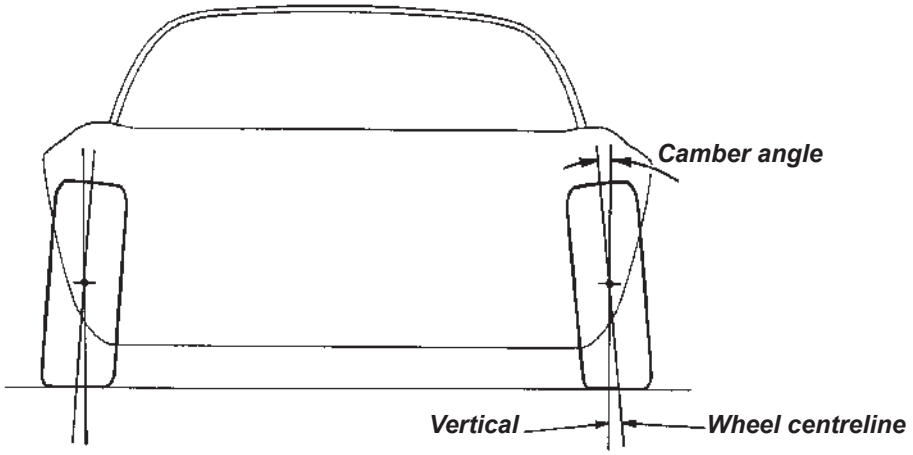

c29

The primary purpose of camber is to achieve the maximum efficiency of the tyre under cornering loads and body roll, with the specification closely allied to a particular wheel/tyre combination. The camber angle changes with suspension travel, becoming more negative on bump, and should be measured only at the specified ride height. Incorrect camber can result in handling deficiencies and excessive tyre wear.

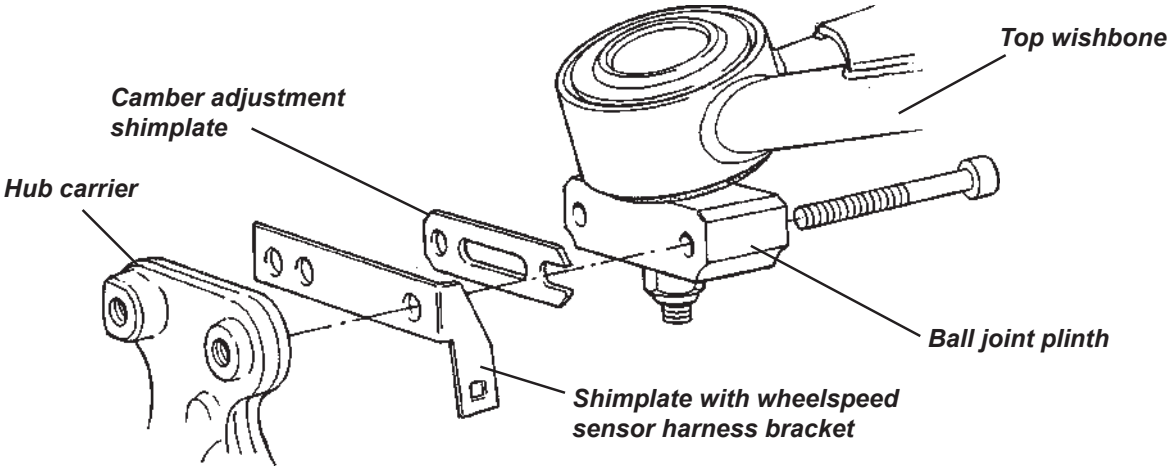

d24a

- Camber adjustment shim plates are fitted between the top wishbone ball joint plinth and the hub carrier.
- Shims are available in 1 mm thickness. Note that on the left hand side, the shimplate fitted against the hub carrier must always incorporate the mounting bracket for the wheel speed sensor harness connector.
- Reducing the shim pack thickness will increase negative camber. Adding shims will reduce negative camber.
- A 1mm shim plate will alter camber by approximately 0.3°.
- In March '04 the caphead bolts securing the ball joint plinth to the hub carrier were upgraded from 8.8 to 10.9 grade, with a corresponding increase in torque from 45 to 68 Nm. Before fitting these bolts, inspect the cap head for the grade marking, apply Permabond A130 (A912E7033) to the threads, and torque tighten to the appropriate figure.

Downloaded from www.Manualslib.com manuals search engine

DH.3 - SUSPENSION DISASSEMBLY/ASSEMBLY

The suspension may be disassembled without the use of any special tools other than a 'Torx' socket for the hub bearing carrier bolts, a spring compressor required only if the spring is to be removed from the damper unit, and a ball joint splitter. If the hub carrier is to be removed, necessitating withdrawal of the driveshaft, it is recommended first to release the driveshaft nut before dismantling the brakes.

With the car on a wheel free lift and with the rear wheels removed:

1. Remove the split pin securing the driveshaft nut, and with the brakes firmly applied, remove the driveshaft nut.

2. Remove the engine bay undertray to provide access to the lower wishbone front pivot.

3. Disconnect the parking brake cable from the caliper. Release the 'P' clip securing the brake hose to the top wishbone and remove the two bolts securing the brake caliper to the hub carrier. Support the caliper aside without straining the brake hose. Release the single retaining screw, and remove the brake disc from the hub.

4. Disconnect the wheel speed sensor cable from each hub unit, and release from routing clips.

5. Release the nut securing the outer end of the toe link to the hub carrier, and use a ball joint separator to release the joint from the carrier.

6. Remove the nut securing the ball pin of the lower ball joint to the hub carrier, and use a ball joint separator to release the joint from the carrier.

7. Remove the two bolts securing the top swivel joint plinth to the hub carrier, noting and retaining the camber adjustment shim pack.

8. Withdraw the hub carrier assembly from the driveshaft, using a suitable puller tool if necessary to release the shaft from the hub. Do not allow any pulling force to be applied through the driveshaft C.V. joints, or damage to the joints will be caused.

9. Remove the top and bottom mounting bolts for the spring/damper unit, and withdraw.

10. Remove the top wishbone pivot bolts, and withdraw the wishbone from the rear subframe.

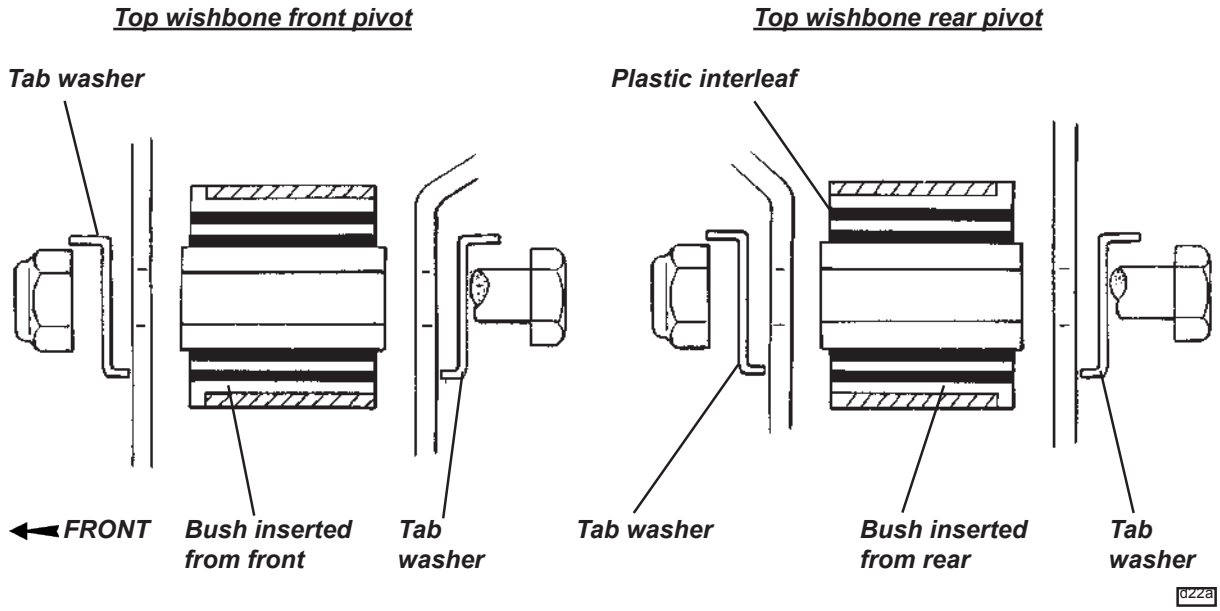

Downloaded from www.Manualslib.com manuals search engine

11. Remove the heatshield over the toe-link inboard ball joint, release the toe-link stud, remove the lower wishbone front pivot bolt and withdraw the lower wishbone and toe link.

12. If necessary, remove the top swivel joint ball pin nut, and use a ball joint splitter tool to separate the joint from its plinth. Either swivel joint may be replaced using suitable press tool dollies.

13. The wishbone pivot bushes are bonded rubber type with a plastic flanged outer sleeve, a plain steel inner sleeve, and a plastic interleaf sleeve within the rubber bush to control the flexing characteristic.
The bushes may be pressed out of the wishbone eyes, and new bushes fitted using suitable press tool dollies. Smear the outer surface of the new bush with IPC 'P-80' rubber lubricant emulsion (A082C6042V) to ease fitment, and assemble as follows:
Top wishbone - insert a single 30mm long bush into each pivot eye from the outside end (front of front eye, and rear of rear eye).

Lower wishbone rear pivot - insert a single 30mm long bush from the front end of the eye.
Lower wishbone front pivot - insert a 16mm long bush into each end of the front eye.

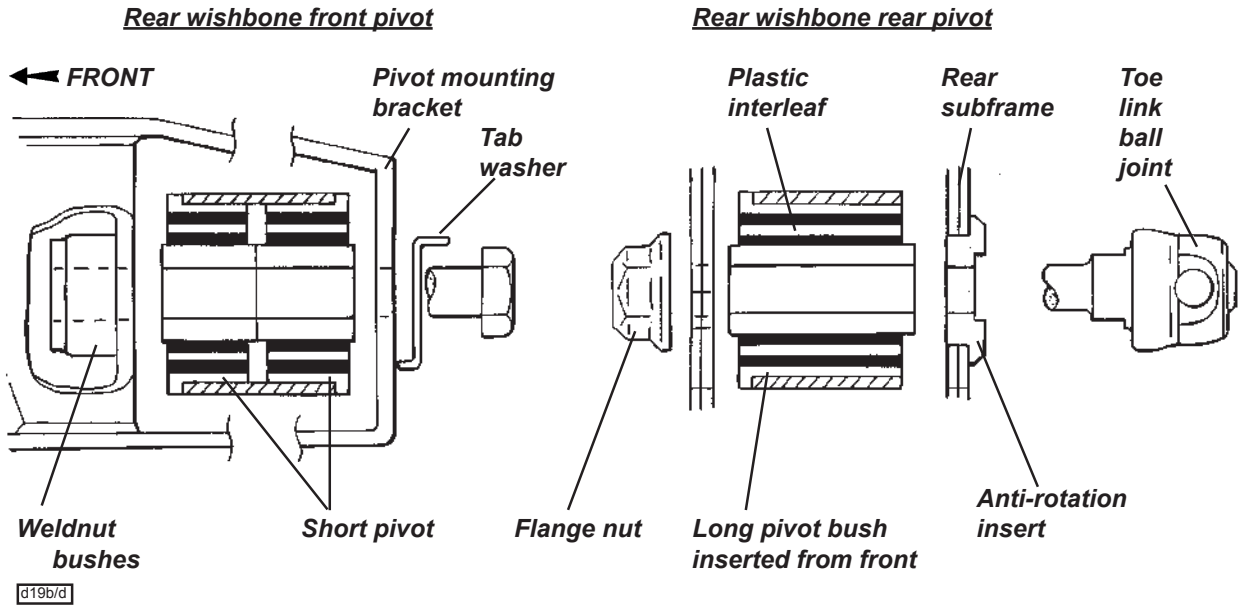

14. The road spring may be removed from the damper using a suitable spring compressor to allow the spring lower slotted seat to be withdrawn. Note that the spring upper seat is retained by a square section circlip in a groove in the damper body:
- Standard Elise & USA from VIN 3013: Use centre of 3 grooves for mid-laden ride height of 130mm.
- USA Elise prior VIN 3013: Use lower of 3 grooves for mid-laden ride height of 135mm.
- Elise with Roadsports suspension package and non-USA Exige: Use the upper of 2 grooves for mid-laden ride height of 130mm.

15. To remove the hub bearing unit from the hub carrier, release the three Torx head bolts and withdraw the complete unit. The hub unit is not serviceable, and is replaced complete if faulty.

Reassembly

Re-assemble the suspension in reverse order to disassembly with the following notes:

- Take care to assemble each pivot bolt with the correct washers/snubbers/spacers as shown in the diagrams.
- Smear the shank of each pivot bolt with PBC grease, but do not allow contamination of the threads.
- Take care to refit the original camber adjustment shimpack.

Downloaded from www.Manualslib.com manuals search engine

- Top ball joint plinth fixing bolts:
  The bolts securing the top ball joint plinth to the hub carrier were upgraded in March '04 at VIN serial number 1537 (approx.) in order to commonise with motorsport applications. Earlier type 8.8 grade bolts should be tightened to 45 Nm; Later 10.9 grade bolts to 68 Nm. The bolt grade is stamped around the head of the bolt. The thread of both bolt types should first be treated with Permabond A130 (A912E7033V).
- Lubricate the ends of the damper top eye bush with rubber grease.
- Tab washers are used for the bolt head of the lower wishbone forward pivot, and on both top wishbone pivots. In each case, ensure that one end of the tab washer is folded around the chassis edge, and after torque tightening the fixing, form the other end of the washer against the flats of the bolt head or nut. In July '05, the thickness of the tab washer was increased from 1.2mm to 1.5mm.
- If the lower wishbone front pivot brackets have been removed from the chassis, ensure that a spacer is fitted on each of the four bolts securing each bracket, in order to allow the required bolt stretch to be achieved.

Left hand bracket viewed from rear

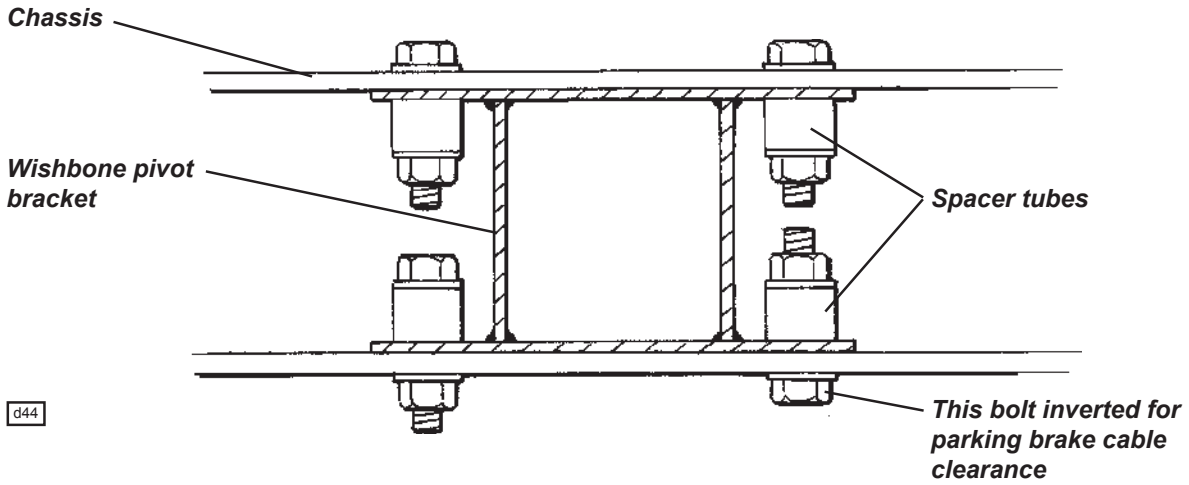

- Note that on previous Elise models, there have been several variants of the toe-link inboard ball joint. The correct joint for 2005 model year onwards has a ball pin thread pitch of 1.25mm (vs. 1.5mm). The flats on the ball pin should be aligned with the channel in the subframe hardened insert. Note that the inboard joint has a LH thread into the toe-link tube, and the outboard joint a RH thread into the toe-link tube with a taper shank ball pin to fit into the hub carrier.

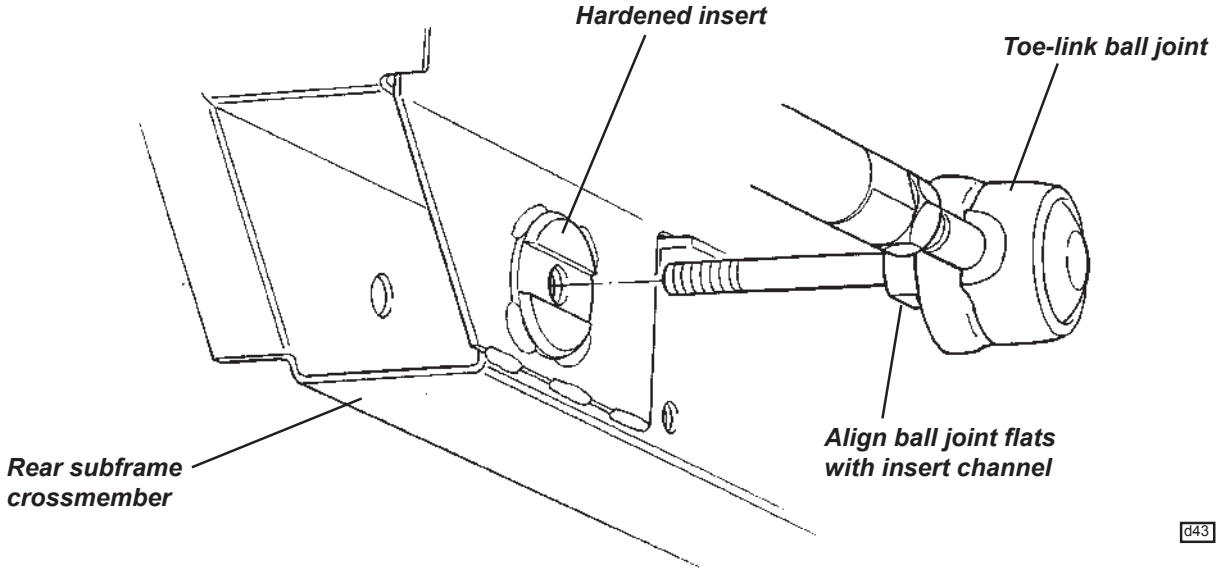

Downloaded from www.Manualslib.com manuals search engine

- Do not operate the car without the exhaust silencer heatshielding correctly fitted, and incorporating heat-shields for the toe-link inboard ball joints.
- Press the brake pedal to reposition the pads before driving the car.
- If the car suffers a suspension impact sufficient to damage a wheel rim, careful attention should be paid to all related suspension components. Such forces can cause stretching of the lower ball pin and consequent fixing nut torque loss. As a safety precaution, it is recommended that in all such cases, the lower ball joint and the two bolts securing the upper ball joint plinth to the hub carrier are renewed, together with both toe-link ball joints.

The Service Schedule specifies that the security of the front and rear suspension is checked at each service. For cars used on race tracks, or in similar conditions, suspension components and torque checks should be carried out between sessions. This operation requires that all the principal suspension pivot bolts are torque checked, noting the following points:

Where a bolt is tapped into a housing or weldnut, and relies on a thread locking compound for security, be aware that if the bolt is disturbed, the locking compound must be re-applied. The following procedure should be adopted for all such fixings:

- Check the torque of the fixing.
- If the specified torque is attained without the fixing being disturbed (moving), take no further action.
- If the bolt moves, the locking action of the thread adhesive will have been compromised. Remove the bolt completely, clean off all old adhesive using a wire brush and acetone, and apply new adhesive as specified.
- Refit the bolt and tighten to the specified torque.

  If for any reason a bolt is found to have become loose, and the car has been operated for any period in this condition, the bolt should be renewed as a standard precaution and related components carefully inspected for hole ovality or wear.

  At every service interval, the toe-link should be checked for free articulation by using a spanner on the flats of the link and twisting in both directions. The torque required to articulate the joints should be little more than may be applied by hand. If any joint is found to be seized or tight (or if any free play is evident), the joint should be renewed. At each service, the toe-link inboard pivot should be torque checked to allow for any settling of the ball joint orientation flats into the galvanised subframe groove.

Torque Settings:		**Nm**
- Upper and lower wishbone pivot bolts		45
- Upper and lower swivel joint ball pins		55
- Upper swivel joint plinth to hub carrier	- 8.8 grade	45
	- 10.9 grade	68
- Toe-link outer ball joint to hub carrier		55
- Toe-link inner ball joint/wishbone to subframe		60
- Toe-link ball joint lock nuts		45
- Damper to lower wishbone		45
- Damper to chassis		45
- Brake caliper to hub carrier	- upper M10	45 - 50
	- lower M8	26 - 30
- Hub bearing unit to hub carrier		90
- Rear hub nut		220

DH.4 - REAR WHEEL BEARINGS

The sealed rear wheel bearings are contained in a steel housing secured to the hub carrier with three 'Torx' bolts. The double row, angular contact, ball bearing is retained in the outer housing and also onto the hub spigot by a shoulder and a peening operation, and is inseperable for service. Note that all four hub assemblies are common, and incorporate a wheel speed sensor in the bearing unit, with a flying lead terminating in an electrical connector plug secured by a camber shim plate bracket.

If there is found to be any discernible free play in the hub bearing, or any roughness or tight spots can be felt, or any signs of lubricant expulsion are evident, the hub assembly should be replaced - there is no provision for adjustment.

Downloaded from www.Manualslib.com manuals search engine

To Replace Hub Bearing Assembly

1. With the wheel removed, apply the parking brake, remove the split pin from the nut retaining the driveshaft in the hub, and release the nut.

2. Release the two fixing bolts, and remove the brake caliper from the hub carrier. Support clear of the brake disc without straining the flexible hose. Release the single countersunk screw and withdraw the brake disc from the hub.

3. Disconnect the wheel speed sensor harness from the hub unit.

4. Using a Torx socket, release the three bolts securing the hub bearing unit to the hub carrier, and withdraw the unit from the hub carrier and driveshaft. If necessary, use a suitable puller tool to press the shaft from the hub, but on no account allow an extension force to be applied to the driveshaft.

5. Fit the new hub bearing unit in reverse order to disassembly, with the following notes:
   - Torque tighten the three Torx bolts securing the hub bearing assembly to the hub carrier to 90 Nm.
   - Torque tighten the driveshaft nut to 220 Nm and retain using a new split pin.
   - Pump the brake pedal to reposition the pads before driving the car.

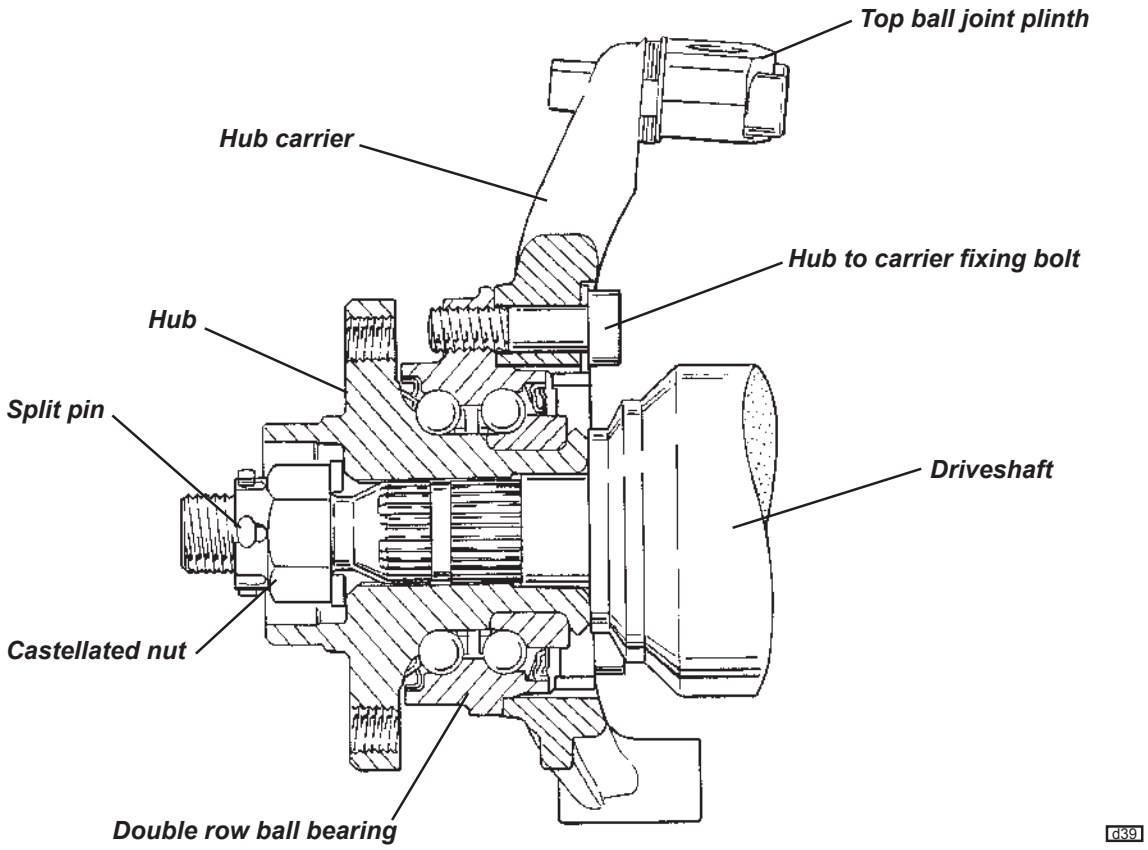

Downloaded from www.Manualslib.com manuals search engine

DH.5 - TRACK USE CHASSIS REAR BRACE KIT - LOTAC05377

The purpose of the kit is to provide a 'double shear' mounting for the inboard ends of the rear toe-links and spread the load distribution into the chassis over a wider base. New spherical joints are used on the inboard ends of the toe-links, with a tubular steel crossbrace interconnecting the two pivot bolts and anchoring to the rear engine steady mounting on the subframe. For cars used on closed circuits, this arrangement provides an increased tolerance to abuse. It may be retrofitted on any Elise 111R/'04 Exige/USA Elise (i.e. Toyota power-train cars).

The rear toe-links comprise the existing outboard taper shank ball joint and toe-link tube, but the inboard joint is replaced by a new spherical joint with no integral stud. A bespoke spacer locates in the orientation groove in the (unchanged) subframe and provides a flat surface against which to clamp the pivot ball of the new joint. A flange head bolt passes through the ball joint and inboard pivot bush of the lower wishbone in a similar manner to previously, but also locates a brace against the rear 'overhung' end of the ball joint. The tubular crossbrace on factory built cars prior to December '05, links the two inboard joints via machined adaptor lugs and turnbuckle adjusters, and is braced directly to the subframe by a welded bracket secured by the engine rear steady mounting fixings. On later factory built cars using a brace kit, the crossbrace is a simple tubular link (B120D0040H) without adjusters or subframe bracket. On these cars, a flat washer A120W4199F is used beneath the head of the crossbrace bolts.

Kit Contents	**Part Number**	**Qty**
Tubular Crossbrace, adjustable	A120D0040H	1
Turnbuckle, crossbrace adjustment	A120D0039F	2
Locknut, turnbuckle, M12, RH thread	A111W3150F	2
Locknut, turnbuckle, M12, LH thread	A111W3149F	2
Flange Nut, brace to subframe, M10	A111W3151F	2
Adaptor Lug	A120D0037F	2
Spherical Joint, toe-link inboard	A120D0036F	2
Spacer, spherical joint to subframe	A120D0035F	2
Pivot Bolt, toe link inboad, M10x120x1.25p	A120W2212F	2
Locknut, pivot bolt, M10x1.25p	A117W3189F	2
Fitting Instruction	LSL489	1

Procedure (adjustable type crossbrace)

1. Remove the rear undertray and diffuser.

2. At both sides, remove the toe-link inboard/lower wishbone rear pivot fixing nut, release the adjacent heat-shield fixings and withdraw the ball joint.

3. Cut a vertical slot in the ball joint heatshield at each side, to accommodate the crossbrace adaptor lug, removing only as much material as necessary.

4. Remove the two rearmost setscrews securing the engine mounting steady bracket to the subframe. If these screws use weldnuts on the subframe, the nuts must be chiselled or ground off.

5. Fit the locknuts onto the turnbuckles, and screw the LH thread of a turnbuckle into each end of the crossbrace tube. Fit an adaptor lug onto the RH thread of each turnbuckle. Loosely assemble the crossbrace to the underside of the subframe plinth using the original setscrews and new flange nuts.

6. On each toe-link, measure the distance from the locknut to the centreline of the inboard pivot ball. Remove the old joint from the link, and replace with a new spherical joint set to the same approximate position.

7. Fit a new spacer into the orientation slot in the subframe before positioning the toe-link ball joint and sliding the new pivot bolt through the crossbrace adaptor lug (adjusting the turnbuckle as necessary), ball joint, spacer, subframe and wishone and retain with a new M10x1.25p locknut. Repeat for the opposite side. Tighten the pivot bolts **only at mid-laden ride height of 130mm** to 50 Nm. Re-secure heatshield.

Downloaded from www.Manualslib.com manuals search engine

8. Tighten the turnbuckle locknuts to 45 Nm whilst holding the adjacent adaptor lug, and then tighten the engine steady mountings to 45 Nm.
9. Adjust rear wheel alignment **only at mid-laden ride height of 130mm** to 1.5mm toe-in each side (± 0.3mm) and tighten the toe-link ball joint locknuts to 45 Nm. Ensure ball joints are phased at 90° to each other to allow maximum joint articulation.

10. Refit undertray and diffuser.

Viewed from below

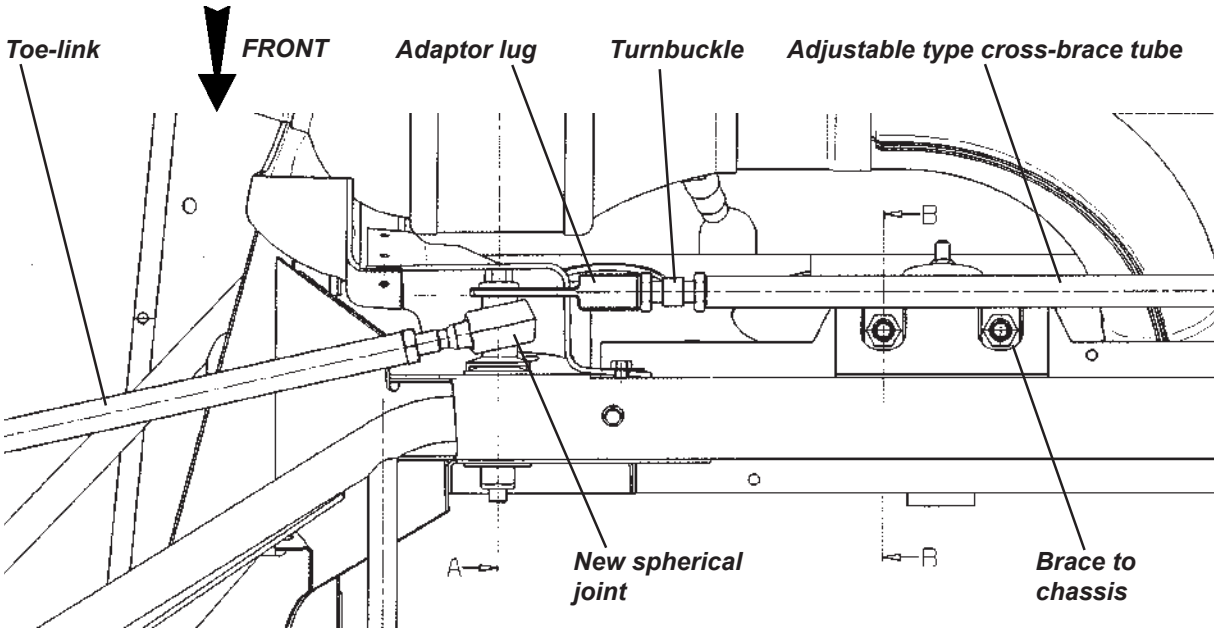

d48

Section A thro' lower link inboard fixing

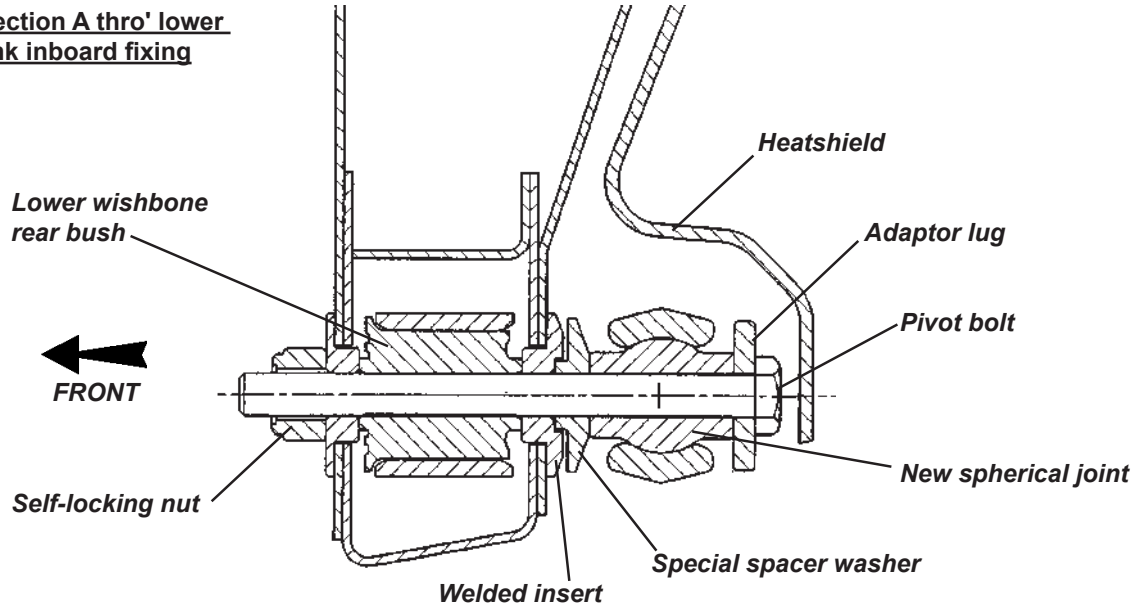

d46a

Downloaded from www.Manualslib.com manuals search engine

Section B thro' steady mounting attachment
(adjustable type crossbrace)

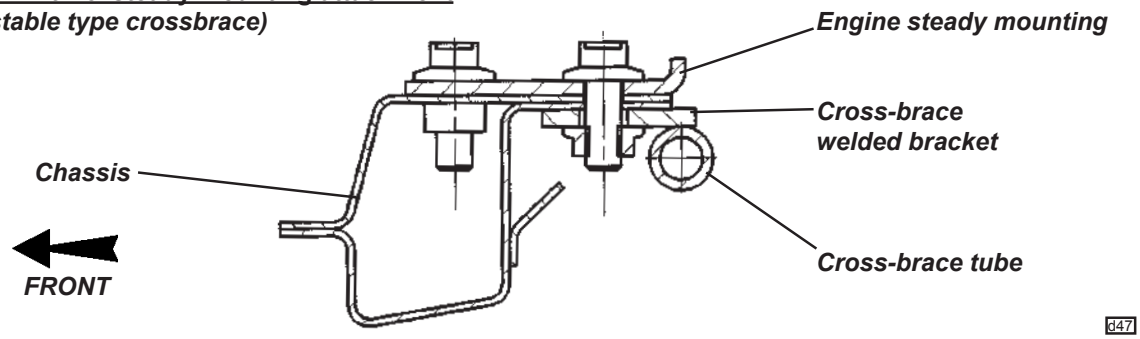

General view

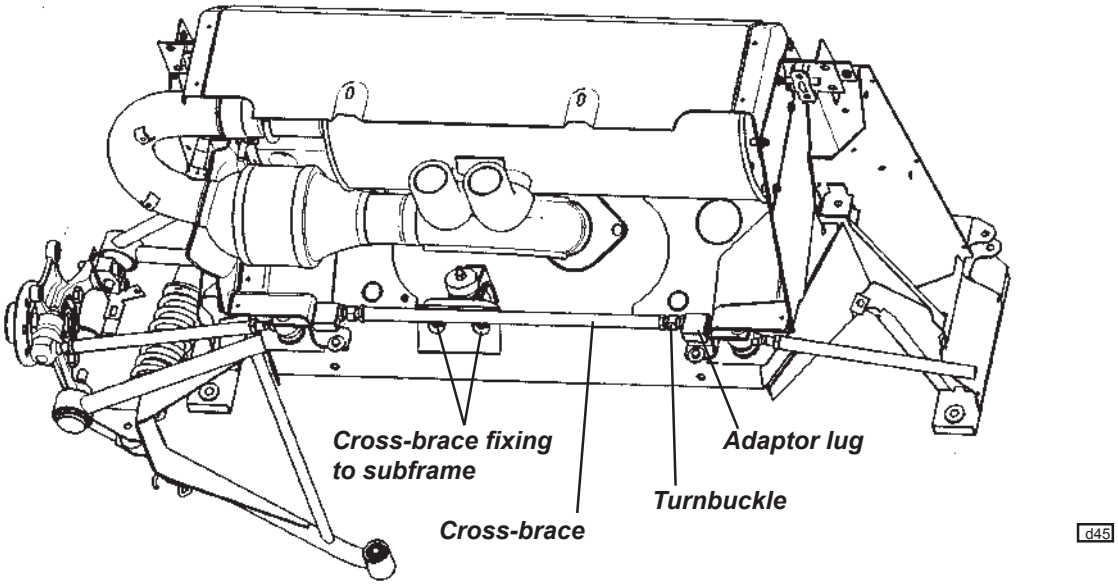

Downloaded from www.Manualslib.com manuals search engine

DH.6 - SUPER SPORT SUSPENSION

To provide customers for 6-speed Elise/Exige with a track optimised suspension choice, a 'Super Sport' suspension specification was introduced in early 2006 as a factory build option package comprising:

- Bilstein dampers with thread adjustable spring platforms and 10 position combined damping adjustment. Remote reservoirs on front dampers.
  Note: For 'Cup' and supercharged cars fitted with Ohlins spring/damper units, refer to Exige S/C supplement.
- Road springs (Elise: 42.5/60 N/mm front/rear, Exige 47.5/65 N/mm front/rear) upgraded to dual rate specification; Front: 31.6/47.5 N/mm, Rear: 46.6/65 N/mm.
- Front anti-roll bar gains 5-hole adjustment and hard plastic mountings.
- Rear suspension chassis brace kit (recommended for track use and/or A048 tyres)
- Lightweight forged wheels, 6.5J x 16 front, 7.5J x 17 rear.
- Yokohama A048 tyres (standard fit on Exige), 195/50 R16 front, 225/45 R17 rear.

Ride Height

Cars factory built with Super Sport suspension are set at 130/130 ride height as standard cars, to provide adequate road going ground clearance and ramp angles. To optimise the car for track use, it is recommended to reduce ride height to 120/120mm.

To adjust the height, first load the car to the mid-laden condition with a full fuel tank and two 75 kg (12 stone) passengers. Then use the 'C' spanners supplied with the car to screw the spring collars upwards on the damper body and drop the ride height as measured beneath the front and rear ends of each chassis main siderail. To speed the attainment of this setting, the spring collars should be adjusted from the standard dimension of 110 mm front and rear, to an initial revised position of 104 mm front, and 102 mm rear as shown in the illustration:

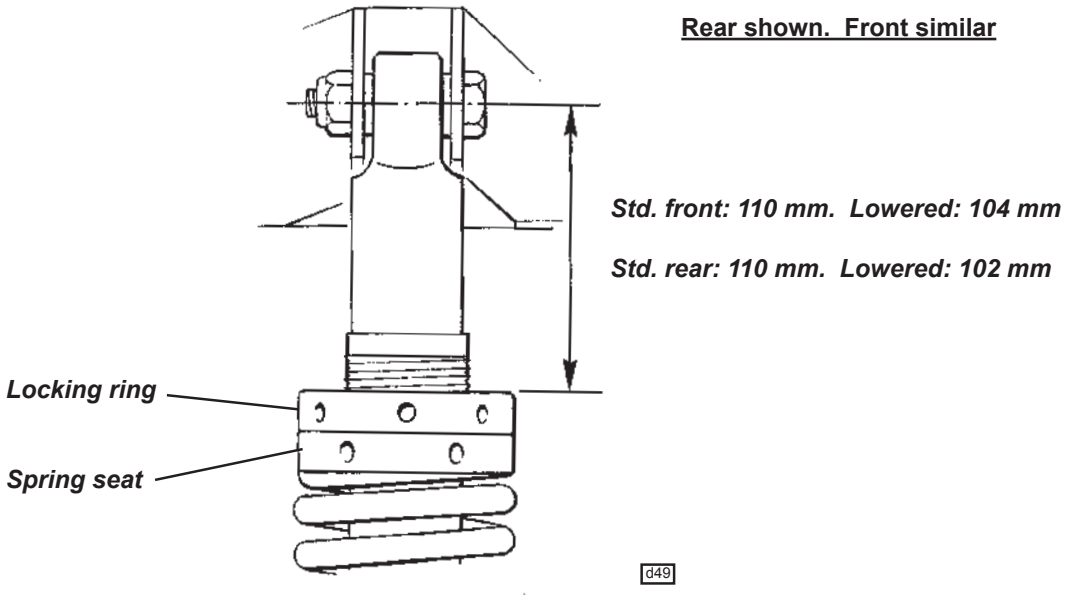

After setting the ride height, the front wheel alignment should then be adjusted back to zero (tolerance +0.7 to -0.5mm toe-in total). All other settings should remain within specification (see below).

Damper Adjustment

Note that the front dampers are equipped with remote gas reservoirs secured to the front face of the body side panels and are protected by the wheelarch liners. Damper adjustment is common to front and rear dampers, and comprises a single knurled ring below the spring lower platform, with printed numbers 1 to 10 to be viewed from outboard against an orange alignment dot on the damper body. 1 is fully soft, 10 fully stiff. Turn the front wheels to full lock to view the front damper setting.

Downloaded from www.Manualslib.com manuals search engine

Recommended settings are as follows:

Road use:	Front 3	Rear 2
Track use:	Front 8	Rear 7

Rear Shown

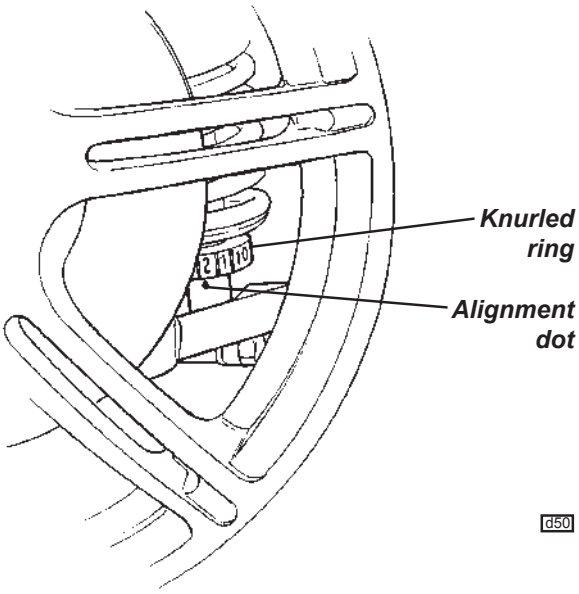

Anti-Roll Bar

An anti-roll bar with 5-hole adjustment is used, with cars built before August '06 using an uprated bar and early type re-positioned hard mountings, whereas later cars use a yellow painted standard rate bar with revised hard mountings in a position common with standard cars. Refer to sub-section CI.3.

Use the foremost hole P1 (shortest lever arm) for maximum stiffness and rearmost P5 for minimum. Increasing front roll stiffness will tend to promote understeer. Recommended position for road and track use is central P3.

Chassis Rear Brace Kit

The chassis brace kit is fully described in sub-section DH.5 but is reduced in complexity for this application by the use of a simple tubular brace to link the rear ends of the toe-link inboard fixing bolts. In this configuration, a flat washer A120W4199F (7/16 x 7/8) must be used between the head of the toe link pivot bolt and the crossbrace tube.

Forged Wheels

The lightweight forged wheels offer a saving of 14.4 kg/car on Elise and 20.4 kg/car for Exige, and feature a wider front rim width of 6.5J. Insets are unchanged.

Yokohama A048 Tyres

The Yokohama A048 tyres have been developed jointly by Lotus and Yokohama to suit the requirements of the performance driver, with special emphasis on track use. Compared with the standard tyre, the front tyre width is increased and the profile reduced from 175/55 to 195/50. The tyre tread design is directional, such that each wheel/tyre assembly is dedicated to a single vehicle corner. Tyre pressures are unchanged.

The Lotus specific construction is identified by the letters 'LTS' moulded on the tyre sidewall. Ensure that any replacement tyre is so marked. Note that an edging strip is applied around both front wheelarches to provide the necessary tyre coverage.

Geometry

Front

Mid-laden ride height (reference height for geometry check)

	- front	120 mm below front end of chassis siderail
	- rear	120 mm below rear end of chassis siderail
Castor	- optimum	+ 3.8°
	- tolerance range	+ 3.5° to + 4.1°; max. side/side 0.35°
Camber	- optimum	- 0.2°
	- tolerance range	+ 0.1° to - 0.3°; max. side/side 0.2°

Downloaded from www.Manualslib.com manuals search engine

Alignment	- optimum	Zero
	- tolerance range	0.5 mm toe out, to 0.7mm toe-in overall

Rear

Mid-laden ride height (reference height for geometry check)

	- front	120 mm below front end of chassis siderail
	- rear	120 mm below rear end of chassis siderail
Camber	- optimum	- 2.5°
	- tolerance range	- 2.0° to - 2.7°; max.side/side 0.2°
Alignment	- optimum	1.8 mm (0.24°) toe-in each side
	- tolerance range	1.5 to 2.0 mm (0.20 to 0.27°) toe-in each side max.side/side 0.3 mm (0.04°)

Super Sport Suspension Retrofit

To retro-fit Super Sport suspension to a Toyota powertrain Elise/Exige, the following parts and procedure may be used:

Parts Required	*Part Number*	*Qty*	
Front Damper	A120C0018H	2	
Rear Damper	A120D0046H	2	
Front Spring	A120C0019H	2	31.5/47.5 N/mm
Rear Spring	A120D0047H	2	46.6/65 N/mm
OR			
Front Spring/Damper Unit	A120C0017F	2	
Rear Spring/Damper Unit	A120D0045F	2	
'C' Spanner, spring seat adjust	A120C6001F	1	
Cradle, tie wrap, reservoir mounting	A082W6293F	2	
Tie Wrap, reservoir mounting	A075W6038Z	4	
Screw, M5 x 20, cradle fixing	A075W5084F	2	
Rawlnut, M5, cradle fixing	A075W6074F	2	
Anti-Roll Bar, stiffened, adjustable	A111C0134S	1	Black
Mounting Clamp, Nylon	A111C0052F	2	>
Spacer Sleeve, mounting clamp	A111C0060F	2	>
Bolt, M5 x 45, cap head, clamp fixing	A082W2106F	2	>
Washer, flat, M5, clamp fixing	A075W4011Z	2	> Use with bar A111C0134S
Nyloc Nut, M5, clamp fixing	A100W3113F	2	>
Pivot Bolt, M10 x 45, lower wishbone front	A075W2065F	2	>
Washer, flat, M10, clamp to chassis	A075W4024Z	2	>
Anti-Roll Bar, std. rate, adjustable	A120C0020F	1	Yellow
Clamping Block, a.r.b. bush	A120C0021F	2	)
Pivot Bush, a.r.b.	A120C6002F	2	)
Bolt, skt cap, M8x65, clamp to chassis	A125W7218F	4	) Use with bar A120C0020F
Washer, flat, 25mm, clamp bolt	B075W4021Z	6	)
Washer, flat, 16mm, clamp bolt	A111W4175F	2	)
Nut, Nyloc, M8, clamp bolt	A075W3010Z	4	)

Optional Additions

Chassis Rear Brace Kit (recommended for track use and/or A048 tyres)

	LOTAC05377	1
Forged wheels & A048 tyres	Refer to Parts List	
Edging Strip, front wheelarch	A117B0559F	2

Downloaded from www.Manualslib.com manuals search engine

Procedure

1. *Anti-Roll Bar - stiffened rate adjustable*

   Remove the anti-roll bar after first drilling out the rivets securing the reinforcing brackets between the bottom of the crash structure and the chassis.

   The adjustable anti-roll bar is secured by two Nylon clamps, fixed to the chassis via the front lower wishbone inboard front pivot bolt, with a 'top hat' section steel spacer preventing the clamp from being crushed. These hard type mountings provide optimum steering response but will transmit more noise and require periodic lubrication with MoS_2 grease at 3,000 mile (5,000 km) intervals.

   Modify the crash structure support bracket as necessary before refitting.

Anti-Roll Bar Mounting - Stiff adjustable

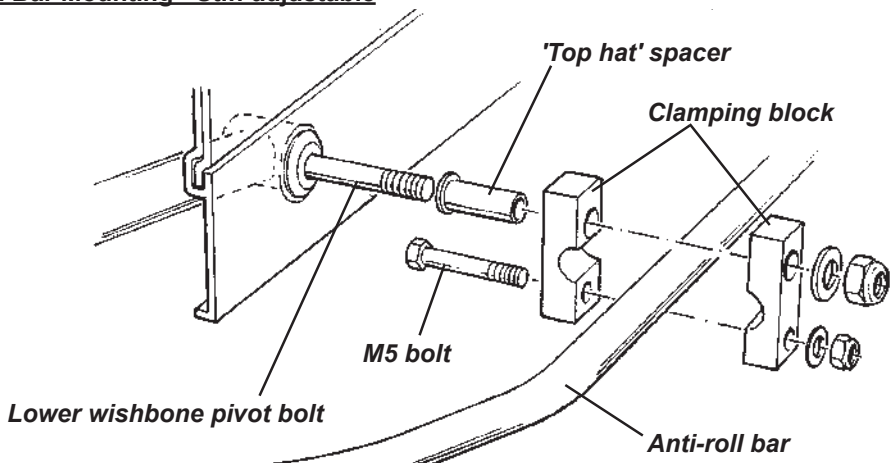

c40a

Anti-Roll Bar - standard rate adjustable

Remove the anti-roll bar after first drilling out the rivets securing the reinforcing brackets between the bottom of the crash structure and the chassis.

Each split pivot bush incorporates a raised shoulder around its centre in order to engage with a groove in the two part clamp, and provide lateral location. A pip on this shoulder locates in a hole in the clamp cap to prevent rotation of the bush. No lubrication is required.

Each bush housing is clamped to the front face of the chassis with two cap head bolts inserted from the front, using large washers under their heads and lower fixing nuts, and a smaller washer beneath the upper fixing nut to fit within the chassis extrusion. Torque tighten the clamp bolts to 25 Nm.

Refit crash structure brackets.

Anti-Roll Bar - Standard rate adjustable

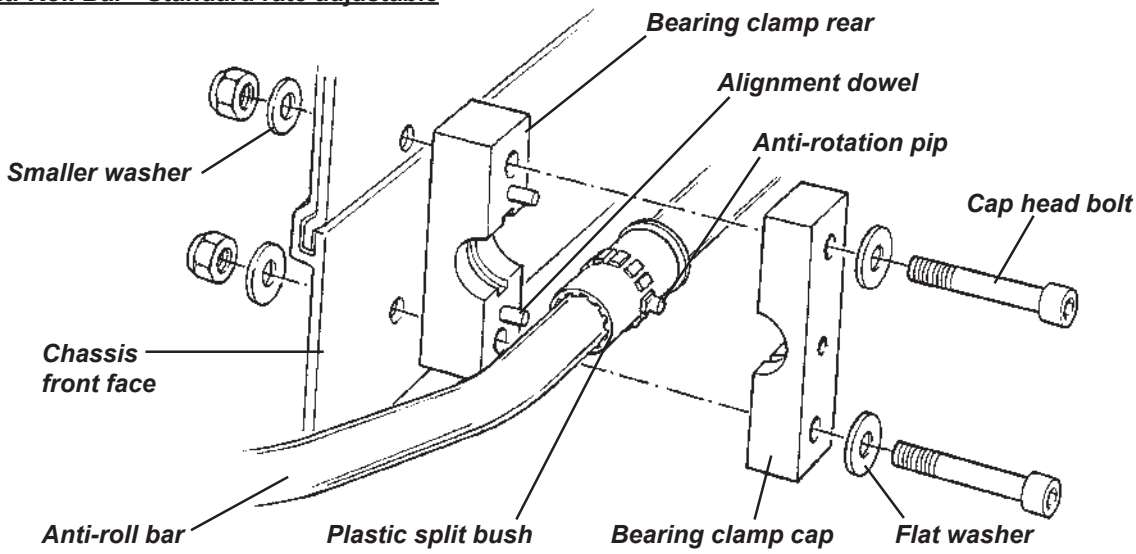

c40b

Downloaded from www.Manualslib.com manuals search engine

2. *Modify Front Damper Bracket*
Remove all four spring/damper units and front wheelarch liners (refer Service Notes section CI).
The upper eye of the alloy bodied Bilstein sport damper is larger than the standard steel eye and requires that the front suspension upper clevis bracket (bolted to the chassis), is modified in order to provide the necessary clearance.
File the bracket edge parallel with the damper eye axis as shown, and protect with a zinc rich anti-corrosion paint.

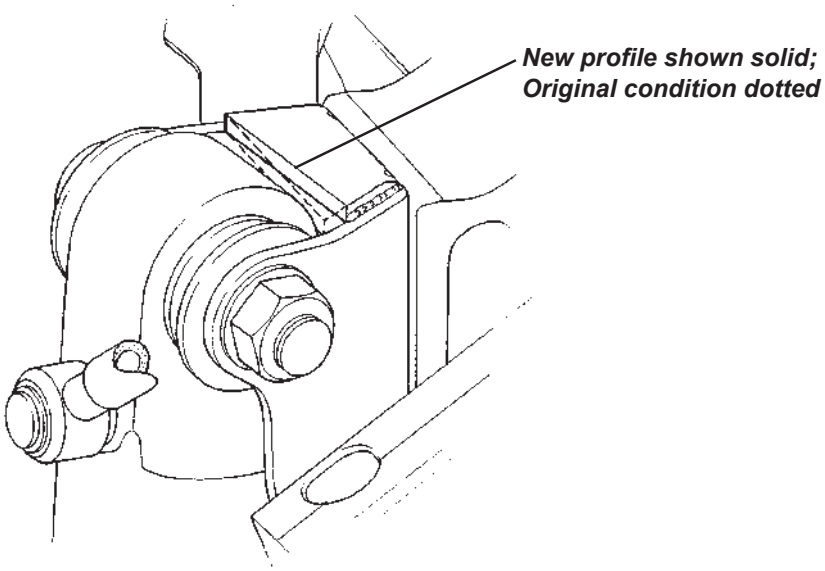

c45

3. *Fit Spring/Damper Units*
Unless fitting pre-assembled spring/damper units, use spring compressor clamps to assemble the new springs and dampers, taking all appropriate safety precautions.
Mount the rear units with the red dot on the damper lower body facing outboard. Mount the front units in similar manner and secure each front remote reservoir to the front face of the body side using a saddle clip and two tie wraps as shown below. Fix the saddle clip using an M5 Rawlnut (drill panel to 9.5mm) and screw. Ensure that the reservoir and hose are positioned to clear the wiring harness and oil cooler pipe.

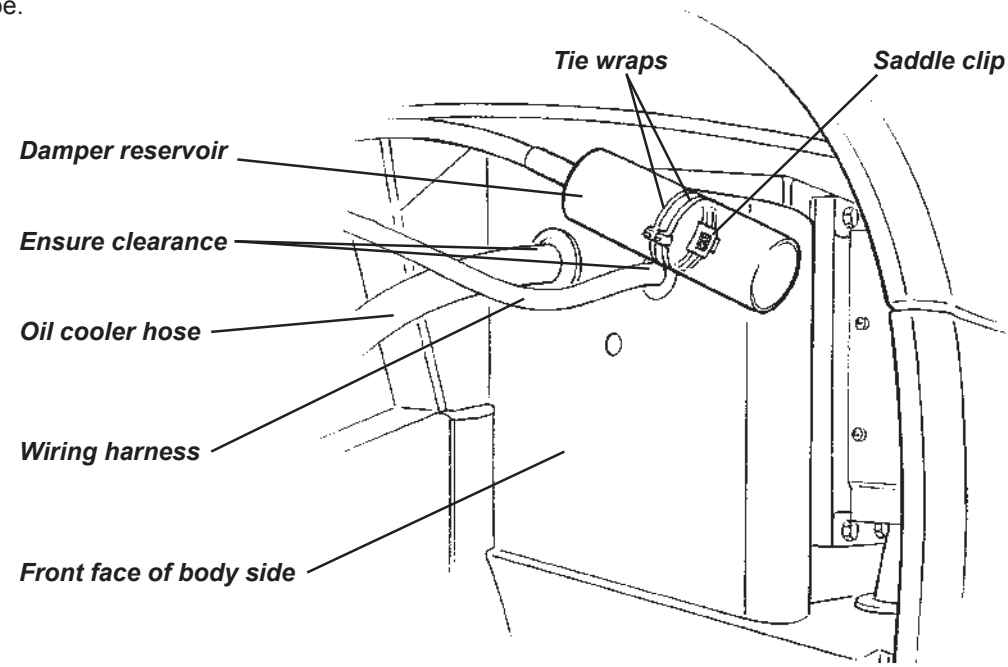

c46

Downloaded from www.Manualslib.com manuals search engine

4. *Damper Adjustment*
   For damper adjustment, see above.

5. *Chassis Rear Brace Kit*
   The chassis brace kit is fully described in Section DH.5.

6. *Forged Wheels*
   The lightweight forged wheels offer a saving of 14.4 kg/car on Elise and 20.4 kg/car for Exige, and feature a wider front rim width of 6.5J. Insets are unchanged.

7. *Yokohama A048 Tyres*
   The Yokohama A048 tyres, have been developed jointly by Lotus and Yokohama to suit the requirements of the performance driver, with special emphasis on track use. Compared with the standard tyre, the front tyre width is increased and the profile reduced from 175/55 to 195/50. The tyre tread design is directional, such that each wheel/tyre assembly is dedicated to a single vehicle corner. Tyre pressures are unchanged.
   The Lotus specific construction is identified by the letters 'LTS' moulded on the tyre sidewall. Ensure that any replacement tyre is so marked.

8. *Front Wheelarch Edging Strip*
   In order to comply with tyre coverage regulations, fitment of A048 tyres requires that edging strip A117B0559F is applied around both front wheelarches, and secured with Permabond C2 or similar adhesive.

9. *Geometry*
   For front and rear suspension geometry settings, see earlier in this section.

Downloaded from www.Manualslib.com manuals search engine

ENGINE

SECTION EH

	Sub-Section	Page
General Description	EH.1	3
Maintenance Operations	EH.2	7
Engine Removal/Replacement	EH.3	11
Special Tools	EH.4	13
Engine Management Component Location	EH.5	14
Elise S Supplement (1ZZ-FE)	EH.6	15

See also Toyota engine repair manual B120T0327J and Toyota 2ZZ-GE engine supplement C120T0327J

Downloaded from www.Manualslib.com manuals search engine

Engine Sections (2ZZ-GE)

From LH side

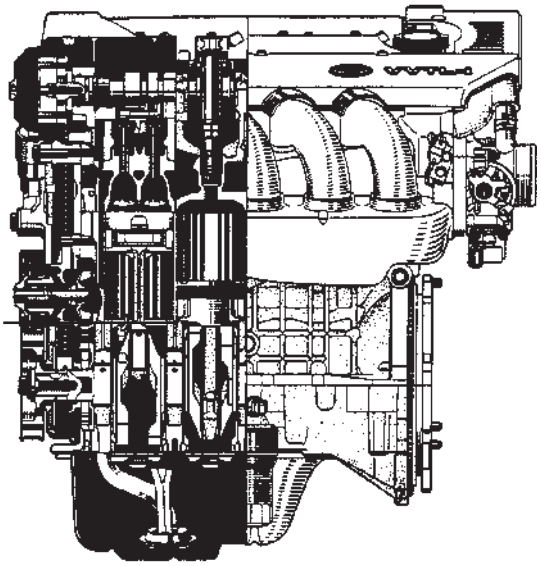

From front

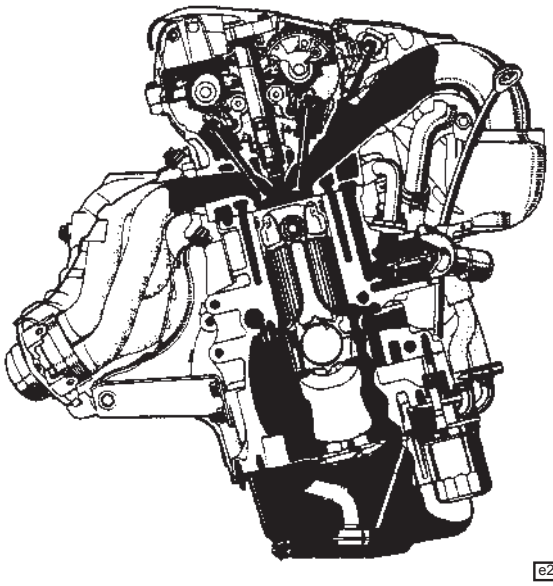

e226

Cylinder head section

Exhaust side

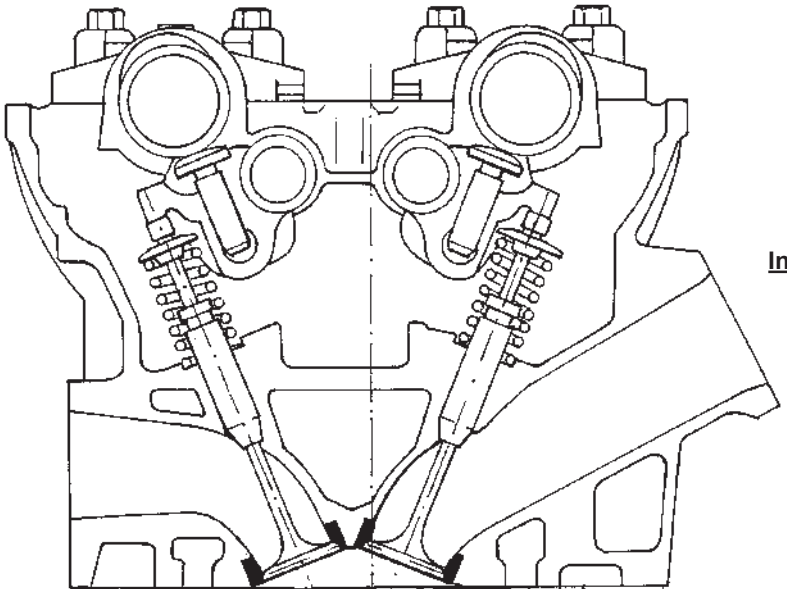

Intake side

e227

Downloaded from www.Manualslib.com manuals search engine

EH.1 - GENERAL DESCRIPTION

The 1.8 litre, 16 valve four cylinder engine used in the Lotus 2005 model Elise is supplied by Toyota Motor Corporation, and is designated '2ZZ-GE'. The engine number is stamped on the rear end of the cylinder block, exhaust side, and is followed by '2ZZ'. A full description and overhaul procedure for this engine family is contained in the Toyota Repair Manual RM733E, a copy of which follows this section.

The lightweight alloy cylinder block uses no separate cylinder liners, but has the integral cylinder walls constructed from MMC (Metal Matrix Composite). The forged steel crankshaft is supported in five cast iron main bearing caps which are integrated into a single piece alloy main bearing panel bolted to the bottom of the block. A pressed steel sump is fitted below the main bearing panel. The iron and tin coated pistons, fitted with three piston rings, are mounted via fully floating gudgeon pins to forged steel connecting rods which use two bolt big end caps around the crankpins. The cylinder head houses four valves per cylinder, with inlets arranged at 43° to the exhaust valves, and incorporates laser clad alloy valve seats welded into the cylinder head. At the front of the engine, a single row chain, automatically tensioned by spring and oil pressure, is used to drive the two overhead camshafts which incorporate VVTL-i (Variable Valve Timing and Lift-intelligent) to advance and retard the inlet camshaft timing under electro/hydraulic control, and increase the lift of both inlet and exhaust valves at high engine speed (see later).

A trochoid type oil pump, driven directly by the front end of the crankshaft supplies an oil gallery along the left hand side of the crankcase, from which are fed the crankshaft main bearings, then the big ends, and via oil jets, the underside of the pistons. The gallery also feeds a drilling up to the cylinder head for the two camshafts, and the VVTL-i mechanism, with the chain tensioner fed from the exhaust cam drilling. The main gallery also feeds the oil filter, vertically mounted on the left hand side of the cylinder block. The timing chain is lubricated via an oil jet directly from the oil pump, and by oil draining down through the timing chest.

The water pump is mounted at the left hand front of the block and is driven by a multi-rib serpentine auxiliary belt from the crankshaft. Coolant is pumped into the front of the cylinder block and head, and when the thermostat is closed, returns to the pump via a by-pass gallery in the cylinder head and block. When the thermostat opens, the by-pass route is closed off, and a greater volume of coolant flows via the heater matrix, and throttle body as well as through the engine cooling radiator.

The die-cast aluminium intake manifold draws air from a single throttle body with cable controlled butterfly valve, into a plenum chamber from which the four intake ports are fed by individual tubes. A twelve hole fuel injector is mounted in the top of each of the four intake ports in the cylinder head, with fuel supplied via a one-way flow system with a pressure regulator contained inside the fuel tank. The Direct Ignition System (DIS) uses separate high tension coils mounted directly onto each of the four spark plugs, with timing control by the engine management ECU.

VVTL-i (Variable Valve Timing & Lift - intelligent)

This system features two elements:

Variable Valve Timing

In order to allow the inlet valve timing to be advanced or retarded to the benefit of particular running conditions, the inlet camshaft is provided with a hydraulic hub connecting the chain sprocket to the inlet camshaft. The hub comprises a housing fixed to the sprocket and a four vane rotor fixed to the camshaft. The rotor is contained within the housing with the rotor vanes dividing each of the four chambers in the housing into two volumes, an advance and a retard side. Each of the chamber volumes is supplied with pressurised engine oil from a spool valve under ECU control. By varying the relative pressure of the two oil volumes, the positional relationship of the camshaft to the sprocket can be altered. The ECU monitors engine speed, intake air volume, throttle position and water temperature to determine the optimum cam phasing for the particular running conditions, and modulates the duty cycle to the oil control (spool) valve until the desired timing is achieved, as determined by reference to the crankshaft and camshaft sensors. Duty cycles greater than 50% cause the timing to be advanced, and duty cycles less than 50% retard the timing. When the target timing is achieved, a 50% 'holding' duty cycle is applied. The oil control valve is mounted at the left hand front of the cylinder head and feeds oilways within the head connecting with the inlet camshaft immediately behind the hydraulic hub.

When the engine is stopped, the inlet cam timing is set at full retard, to allow easy starting. To allow time for oil pressure to build after engine start up, a spring loaded lock pin engages at full retard to mechanically lock the hub, until normal oil pressure releases the pin automatically.

The table shows the basic timing strategy for different operating conditions:

Downloaded from www.Manualslib.com manuals search engine

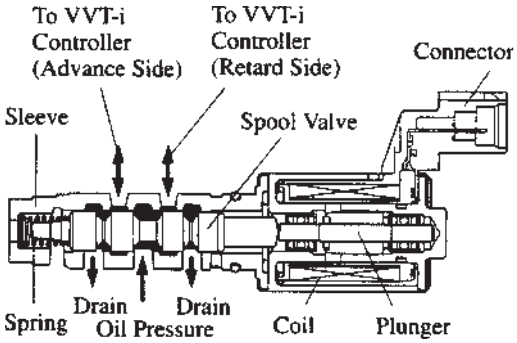

e223

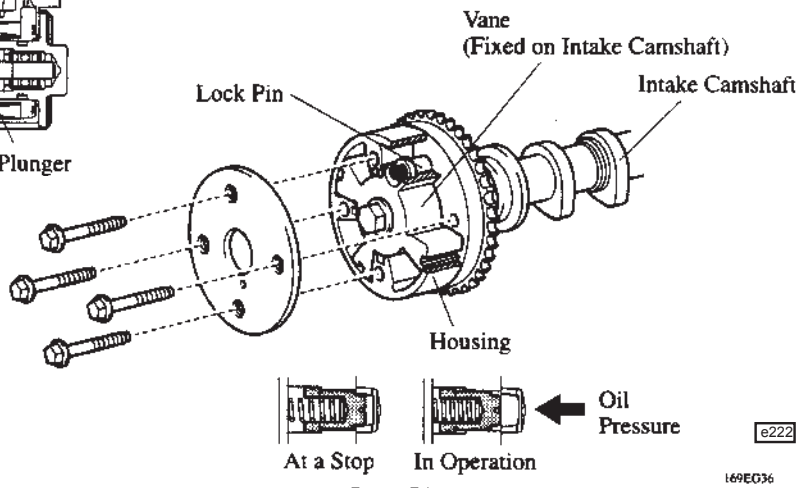

e222

Lock Pin

e224

Operation State	Range	Valve Timing	Objective	Effect
During Idling	1	TDC; IN; EX; Latest timing	Minimizing overlap to reduce blow back to the intake side	Stabilized idling rpm Better fuel economy
At Light Load	2	IN; EX; To retard side	Decreasing overlap to eliminate blow back to the intake side	Ensured engine stability
At Medium Load	3	IN; EX; To advance side	Increasing overlap to increase internal EGR for pumping loss elimination	Better fuel economy Improved emission control
In Low to Medium Speed Range with Heavy Load	4	IN; EX; To advance side; BDC	Advancing the intake valve close timing for volumetric efficiency improvement	Improved torque in low to medium speed range
In High Speed Range with Heavy Load	5	IN; EX; To retard side	Retarding the intake valve close timing for volumetric efficiency improvement	Improved output
At Low Temperatures	–	IN; EX; Latest timing	Minimizing overlap to prevent blow back to the intake side for reduction of fuel increase at low temperatures, and stabilizing the idling rpm for decreasing fast idle rotation	Stabilized fast idle rpm Better fuel economy
Upon Starting/ Stopping the Engine	–	IN; EX; Latest timing	Minimizing overlap to minimize blow back to the intake side	Improved startability

Downloaded from www.Manualslib.com manuals search engine

Note that compromises are involved in the programming of inlet cam timing, since advancing the valve opening point also advances the valve closing point, when the ideal might be to advance the opening and retard the closing points. For any particular engine running conditions, the timing is adjusted to optimise either the valve opening point and overlap period, or the valve closing point, whichever provides the most benefit.

The range of inlet cam timing available is from:

Opening 33° BTDC, Closing 15° ABDC)
to;) with standard (low speed) valve lift
Opening 10° ATDC, Closing 58° ABDC)
or;
Opening 58° BTDC, Closing 54° ABDC }
to; } with high speed valve lift (see below)
Opening 15° BTDC, Closing 97° ABDC }

Variable Valve Lift

Both inlet and exhaust camshafts are machined with two cams for each cylinder, a low lift cam and a high lift cam. Each low lift cam actuates, via a low friction roller, a rocker arm which connects with a pair of inlet or exhaust valves. The corresponding high lift cam actuates a spring loaded tappet housed within the rocker arm, and under low speed conditions, has no effect on valve operation due to the clearance between the bottom of the tappet and the rocker arm.

When engine speed reaches 6,000 rpm at normal running temperature, the ECU operates a spool valve on the back of the cylinder head to close an oil return line, and raise oil pressure within the rocker pivot shaft and passages within each rocker. This increased oil pressure is sufficient to overcome the spring loading of a packer pin contained within each rocker arm, which is then forced between the bottom of the high speed cam tappet and the rocker arm. Each high lift cam then controls valve operation, with the rocker being lifted clear of the low speed cam. The higher valve lift for both inlet and exhaust valves in conjunction with the variable valve timing, provides greater efficiency and power output at high engine speeds.

Standard (low speed) valve lift: - inlet; 7.25 mm
- exhaust; 7.25 mm
High speed valve lift: - inlet; 11.4 mm
- exhaust; 10.0 mm

Note that engine speed is limited to 6,000 rpm until normal running temperature has been attained.

Illustrations overleaf.....

Downloaded from www.Manualslib.com manuals search engine

Low and Medium Speed

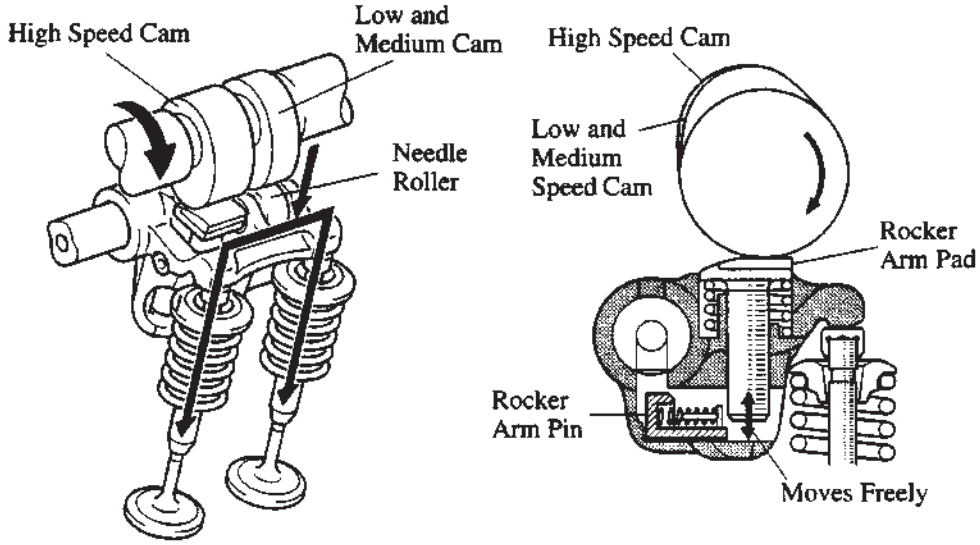

High Speed

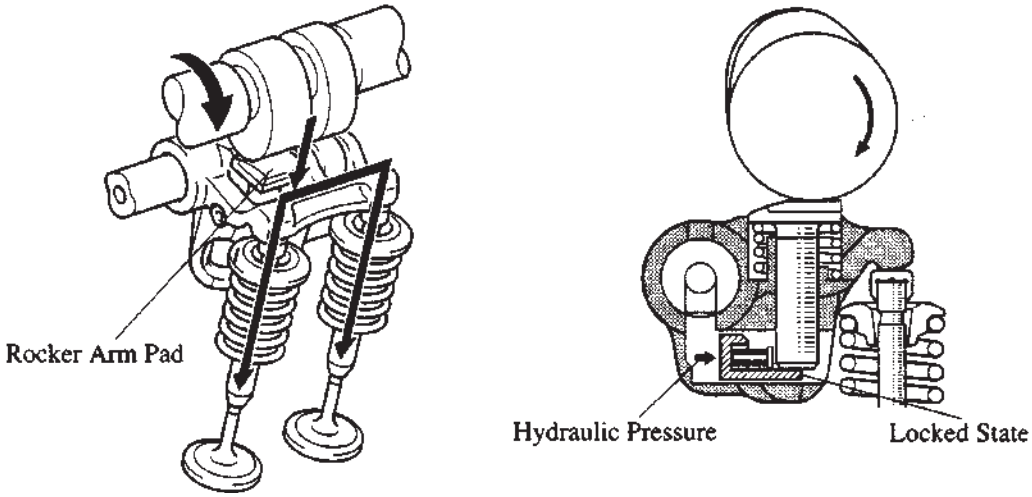

e225

Downloaded from www.Manualslib.com manuals search engine

Overhaul Notes

1. Timing Marks
   Take care when setting the engine to its 'timing' postion. Crankshaft at TDC, inlet cam pulley mark facing inwards on centreline, exhaust cam pulley mark facing inwards but ONE TOOTH COUNTERCLOCKWISE from centreline.

2. Valve Clearances
   a) It is unlikely that valve clearances will require adjustment unless components are replaced. A single forked rocker arm is used to operate a pair of valves, which are shimmed during manufacture for equal clearance. Routine service clearance checks should be made between the cam and roller follower. Only if a valve or rocker arm is replaced need the clearance between individual valves and the rocker arm be measured. Adjustment procedure is detailed in the text.
   b) When using the shim adjustment special tool, before removing a shim from a valve stem, ensure that the oil drain passages on the exhaust side of the head are blocked with paper towel. Shims are easily dropped and may fall down the drain passages into an oil gallery in the crankcase, requiring engine removal to retrieve.

3. Stretch Bolts
   The cylinder head bolts, big end bolts and main bearing cap bolts are 'stretch' type with an angular tightening procedure. The bolts should be measured to determine their suitability for re-use. Measure length or diameter as specified in the text. Note that the big end bolts are 8.7 to 8.8 mm standard diameter, with 8.5 mm minimum.

4. Timing Chain Tensioner
   The maintenance free timing chain tensioner uses spring tension and engine oil pressure in conjunction with a non-return ratchet mechanism to maintain chain tension. A pivotted hook on the tensioner body is provided to aid assembly, by enaging with a pin on the spring plunger to hold the assembly retracted whilst fitting. After fitment to the timing cover, the engine is then turned backwards so that the chain forces the plunger into the tensioner body, which action pushes the hook into a disengaged position and allowing tension to be applied on resumption of normal rotation. The ratchet mechanism prevents subsequent plunger retraction.

5. Bearing Shell Size Coding
   Note that the main bearing shells and big end shells are selective thickness dependent on journal and housing size. Pistons are one size only. No reboring or crankshaft grinding is permitted.
   Main bearing housing size codes are stamped onto the cylinder block, and crankshaft journal size codes on the crank. If necessary, Plastigage can be used to deterime oil clearance. Big end codes are stamped only on the connecting rod caps. Service replacement shells will also be marked on the back with the size code.

6. Knock Sensor
   The knock sensor used for Lotus applications is an annular type fitted over an M8 stud, with the retaining nut tightened to 20 Nm.

EH.2 - MAINTENANCE OPERATIONS

Engine Oil Level Check

The engine oil level should be checked regularly, such as every two or three fuel stops, and the oil level maintained near the top mark on the dipstick. It is especially important to keep a check on the oil level during the vehicle's first 1,000 miles (1,600 km), as both the fuel and oil consumption will be prone to some variance until the engine components have bedded in.

The best time to check the level is when the oil is warm, such as during a fuel stop. Ensure that the car is parked on a level surface and that a few minutes have elapsed since stopping the engine to allow oil to drain back into the sump. If the engine is stopped before reaching normal running temperature, the oil will not drain back so readily, and the dipstick will display an artificially low reading.

Downloaded from www.Manualslib.com manuals search engine

Dipstick: The dipstick is identifiable by its yellow loop handle, and is located at the right hand front of the engine. Withdraw the dipstick, and wipe with a paper towel. Replace the dipstick, if necessary feeding the blade into the tube with the fingers, before pressing firmly to ensure that the handle is fully seated. Withdraw the dipstick again to inspect the oil level, which should lie between the two dimples on the end of the stick.

The oil level should be maintained at the upper of these two marks in order to provide optimum engine protection.

Topping Up: If topping up is necessary, unscrew the oil filler cap from the left hand end of the cam cover. Add a suitable quantity of the recommended engine oil (see 'Recommended Lubricants') taking care not to spill any oil onto engine or electrical components; use a funnel if necessary.

The difference between high and low dipstick marks is equivalent to 1.5 litre. Allow several minutes for the oil to drain through to the sump before re-checking the oil level.

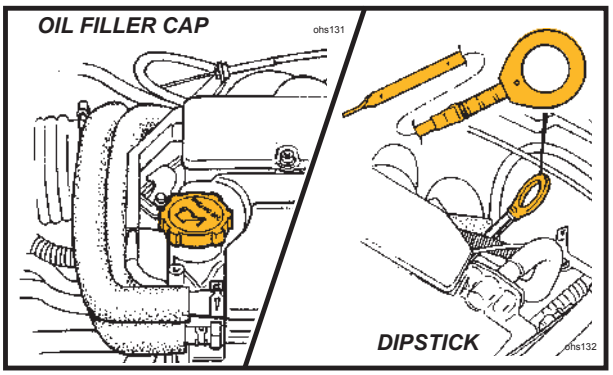

Do NOT overfill, or lubrication will be degraded and consumption increased as the oil becomes aerated. Refit the filler cap, turning clockwise until secure.

Engine Oil Change

The use of high quality oil, renewed at the specified intervals, is the key to engine longevity and sustained performance. Adhere strictly to the engine oil and filter change intervals specified in the Maintenance Schedule.

For access to the engine sump and filter, the engine bay undertray must first be removed. This is most easily achieved with the vehicle raised on a garage hydaulic lift, or alternatively, parked over an inspection pit. The drain plug is located at the rear of the sump, and should be removed to drain the sump immediately after a run when the oil is warm and the impurities are still held in suspension.

WARNING: - Take all suitable precautions to guard against scalding from the hot oil.

Allow the oil to drain completely before cleaning the drain plug, fitting a new sealing washer, and tightening securely. Refill with the recommended lubricant via the oil filler on the camshaft cover, to the top mark on the dipstick, allowing several minutes for the oil to drain through to the sump before checking the level. Take care not to overfill. Refit the oil filler cap securely, and check the oil level again when the engine is fully warm (see above).

Oil Filter

The canister type oil filter is vertically mounted at the front of the engine, and is accessible from beneath after removal of the engine bay undershield. The filter should be renewed along with the engine oil, at intervals specified in the Maintenance Schedule.

WARNING: Take all suitable precautions to guard against scalding from the hot oil.

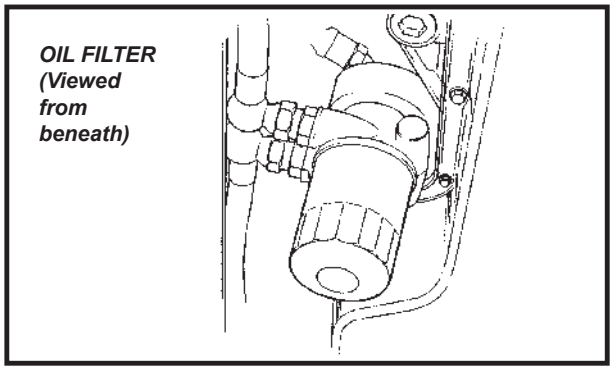

Remove the filter by turning in a counterclockwise direction, if necessary using an oil filter wrench, and dispose of safely.

Ensure that only a Lotus specified filter is fitted, as parts with identical outward appearance can contain different internal features. Before fitting a new filter, clean the mating face on the engine, and smear the new seal on the filter with clean oil. Add a small amount of clean engine oil into the filter, screw onto its spigot and tighten BY HAND sufficiently to make a secure seal, typically 2/3 to 3/4 of a turn after the sealing faces have made contact. Overtightening using a filter wrench may damage the canister and/or complicate subsequent

Downloaded from www.Manualslib.com manuals search engine

removal. Start the engine and check for oil leaks. Re-check the security of the filter, further tightening by hand if necessary. Check the oil level (see above) when the engine is fully warm.

Oil Coolers

The foregoing oil change procedure does not disturb the oil quantity contained in the twin oil coolers and associated pipework, but is considered perfectly satisfactory for routine maintenance operations. In instances of major engine failure where the oil system may be contaminated with metallic debris, all oil cooler lines should be thoroughly flushed out and the oil cooler radiators replaced.

If the oil cooler circuit is drained or replaced, the following procedure should be adopted to fill the cooler system before starting the engine:

1. Attach a tube to the bleed nipple on the sandwich plate between oil filter and engine block, and lead into a catch tank. Open the bleed nipple.

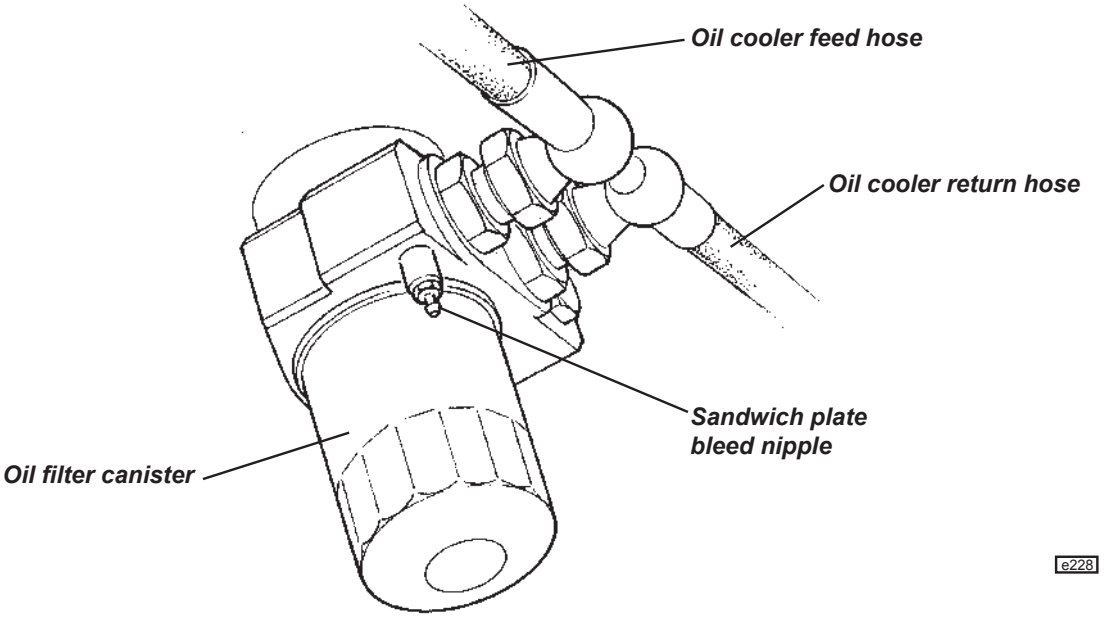

2. Disconnect the outlet hose from the top of the LH oil cooler, and pour engine oil into the cooler until oil reaches the bleed nipple (approx. 2.5 litres). Close the bleed nipple, tightening to 8 Nm.

3. Connect the LH cooler outlet hose and tighten to 40 Nm.

4. Add a further 0.7 litres of oil into the engine to accommodate the volume of the return hose between LH oil cooler and engine.

5. After starting the engine, restrict running to idle speed for a minimum of 5 minutes, to allow the oil cooler lines to be purged of air. Stop engine and re-check oil level.

Note: For cars fitted with an Accusump pressurised oil storage canister, refer to separate literature.

Downloaded from www.Manualslib.com manuals search engine

Air Cleaner Element

The air filter should be inspected at intervals dependent on the operating conditions. When the vehicle is operated in a relatively clean environment, the element should be renewed at intervals specified in the Maintenance Schedule, but where a dusty or smog laden atmosphere prevails, or other factors contribute to filter contamination, more frequent replacement will be required dependent on the level of pollution.

A disposable folded paper type air cleaner element is fitted in a housing at the left hand front of the engine bay. For access to the element, the left hand rear wheel and wheelarch liner must first be removed. Before opening the air cleaner housing, the wheelarch area should be cleaned to reduce the possibility of filter or housing contamination with road dirt.

To open the filter housing, release the two spring clips at the outboard end of the housing, and hinge open sufficiently to allow the element to be withdrawn.

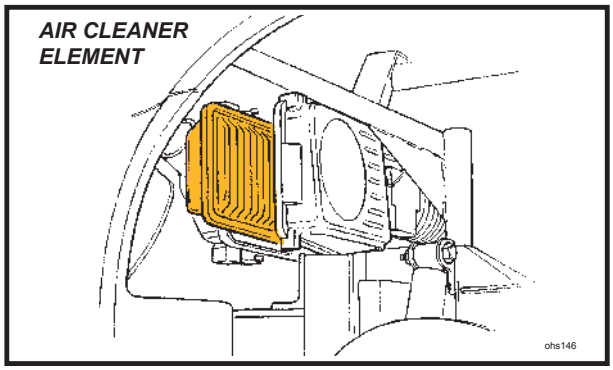

Clean the inside of the housing, including the joint faces, taking care not to contaminate the ‘clean’ engine side of the assembly. Fit the new filter element into position with the shallow side facing the 'clean', engine side of the housing. Ensure that the hinge lugs at the inboard end of the housing are correctly engaged before closing the housing and securing with the two spring clips. Refit the wheelarch liner and rear wheel.

Auxiliary Drive Belt

A single multi-rib serpentine type belt is used to transmit drive from the crankshaft to the water pump, alternator and a.c. compressor, with a slave pulley fitted in place of the power steering pump used in other applications. A hydraulically damped, spring loaded tensioner arm applies tension to the back of the belt, and is maintenance free. The belt itself should be inspected for condition at each service interval, and if it exhibits any evidence of physical damage, cracking, fraying, perishing, abrasion or contamination, it should be replaced. In the case of oil or coolant contamination, the cause must be identified and rectified, and each of the pulleys must be thoroughly degreased before the new belt is fitted.

For further details, refer to section CH in the Engine Repair Manual, but note that only a six-sided socket should be used on the cast boss on the tensioner arm. Due to the manufacturing draft angle of the casting, a twelve point socket is liable to cause damage.

Spark Plugs

The ignition system uses a distributorless ignition system (DIS) which employs an individual high tension coil for each of the four spark plugs. Each coil is mounted directly onto its spark plug using an integral connector and is secured to the cam cover with a single screw. The spark plugs use small diameter centre electrodes made of iridium for long life and high performance, and require changing only at 54,000 mile (90,000 km) intervals.

For further details, refer to section IG in the Engine Repair Manual.

Downloaded from www.Manualslib.com manuals search engine

EH.3 - ENGINE REMOVAL/REPLACEMENT

It is recommended to remove the rear clamshell prior to powertrain removal in order to improve access, and to reduce the possibility of paint damage. The engine may be removed from above, with or without the transmission. The following procedure applies to the engine/transmission assembly, but to avoid disturbing the suspension, refer to sub-section FJ.5 to separate the engine from the transmission before withdrawing the engine alone.

Fuel Pressure Relief Procedure

This procedure should be used prior to disconnecting any part of the fuel line.

- Pull out the fuel pump fuse (on the left hand side of the engine bay bulkhead, as shown), start the engine, and run until it stops from starvation. Crank the engine for a further few seconds.
- If the engine is a non-runner, pull out the fuel pump fuse, and crank the engine for 20 seconds to minimise residual fuel pressure.
- Disconnect the battery.
  It is recommended first to release the quick fit connector located to the rear of the coolant header tank:
- Release the retaining clip securing the pipe joint to the header tank bracket.
- Slide the orange coloured safety lock to allow access to the connector release buttons.
- Surround the pipe joint with a shop towel to absorb fuel contained in the pipework before pressing the release buttons and separating the joint.

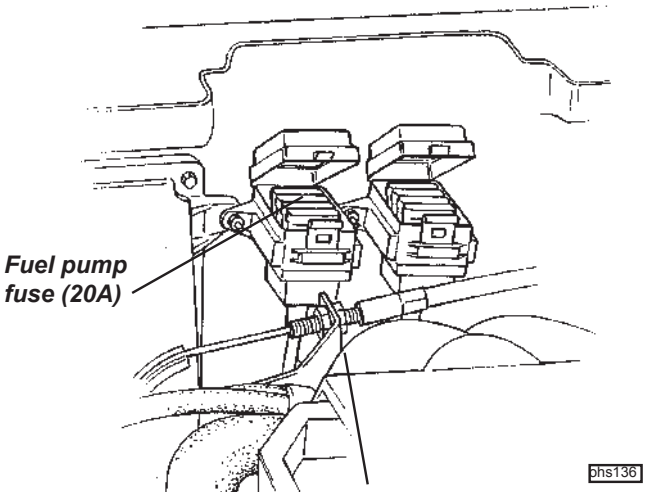

WARNING: Be aware of the possibility of full pressure retention in the fuel line caused by a system fault.

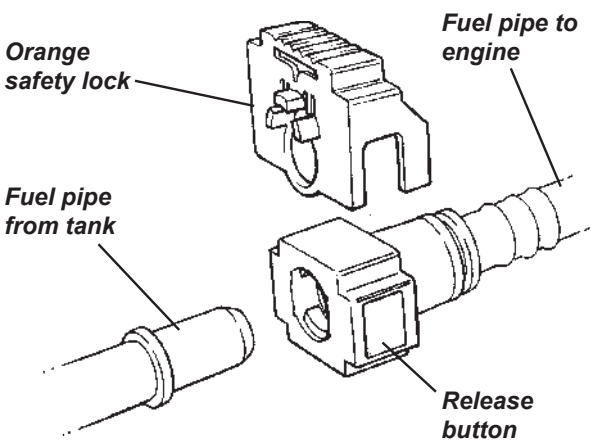

- Before re-making the joint, ensure that the orange safety lock is fitted onto the pipe connector in the orientation shown in the illustration.
- Push the male pipe end fully into the female connector until a click is heard. Pull on the pipe to ensure complete engagement.
- Slide the orange safety lock over the connector to prevent accidental pressing of the release buttons.
- Secure the pipe/connector using the pipe clip on the header tank bracket.

Downloaded from www.Manualslib.com manuals search engine

1. Remove the engine bay undertray and diffuser, both rear road wheels and the rear clamshell (see sub-section BR.7).

2. On a.c. cars, recover refrigerant and disconnect both a.c. hoses from the pipes at the rear of the RH sill.

From beneath the car:

3. Drain coolant, transmission oil and, if necessary, engine oil. Diconnect the coolant inlet hose from the thermosat housing and cap both apertures. Disconnect the two oil cooler hoses from the sandwich plate and cap all ports and hoses.

4. Disconnect the exhaust manifold from the downpipe.

5. Release the gear cable routing clips from beneath the engine. Disconnect the earth braid between chassis and transmission.

6. Release the clutch slave cylinder from the transmission housing and support aside.

7. Release the steady mounting between the front of the engine and the chassis, and between the rear of the engine and the subframe.

From above:

8. Release the gearchange cables from the transmission by removing the 'R' clips retaining the inner cable eyes, and the 'C' clips retaining the outer cables.

9. Disconnect the air intake hose between air cleaner and intake plenum, and release the brake servo vacuum hose from the intake plenum.

10. Disconnect the throttle cable. Disconnect the radiator feed hose and heater feed hose from the rear end of the cylinder head. Disconnect the heater return hose from the water rail, and the two hoses and electrical connector from the header tank. Disconnect the re-circ. pump hose to the chassis pipe, and release the electrical connector. Unplug the engine harness. Release the header tank bracket from the subframe, and remove the bracket complete with tank and recirc. pump. Release the purge pipe from the throttle body.

11. Remove the LH driveshaft from the transmission:
Release the top ball joint plinth from the LH hub carrier noting and retaining the camber adjustment shims, and separate the toe-link ball joint separated from the carrier. The driveshaft inboard joint is retained in the transmission by a round section circlip. The joint may be removed by applying a shock pull to the C.V. joint body using a slide hammer with a forked end. Take great care not to damage the output oil seal on withdrawal.
CAUTION: Do NOT attempt to remove the inboard C.V. joint from the transmission by pulling on the driveshaft. The balls of the inboard joint are restrained for transit purposes only, by a circlip at the end of the ball tracks. Applying an extension force to the joint will damage the balls and require joint replacement. Apply pressure only to the outer body of the joint. Do not allow the brake hose to be stetched or stressed, and support the driveshaft after withdrawal to protect the shaft joints and hub carrier. Cap the driveshaft aperture in the transmission.

12. Remove the RH driveshaft from the transmission:
Release the top ball joint plinth from the RH hub carrier noting and retaining the camber adjustment shims, and separate the toe-link ball joint separated from the carrier. The right hand driveshaft incorporates a bearing for the extension shaft and it is this which retains the shaft in the transmission. Remove the two bolts ecuring the bearing bracket, and withdraw the complete shaft assembly taking great care not to damage the ouput oil seal. Do not allow the brake hose to be stetched or stressed, and support the driveshaft after withdrawal to protect the shaft joints and hub carrier. Cap the driveshaft aperture in the transmission.

Downloaded from www.Manualslib.com manuals search engine

13. Fit two engine lifting brackets T000T1437S to the left hand front and right hand rear of the cylinder head. Sling support the power unit before releasing the RH and LH engine mounting brackets.

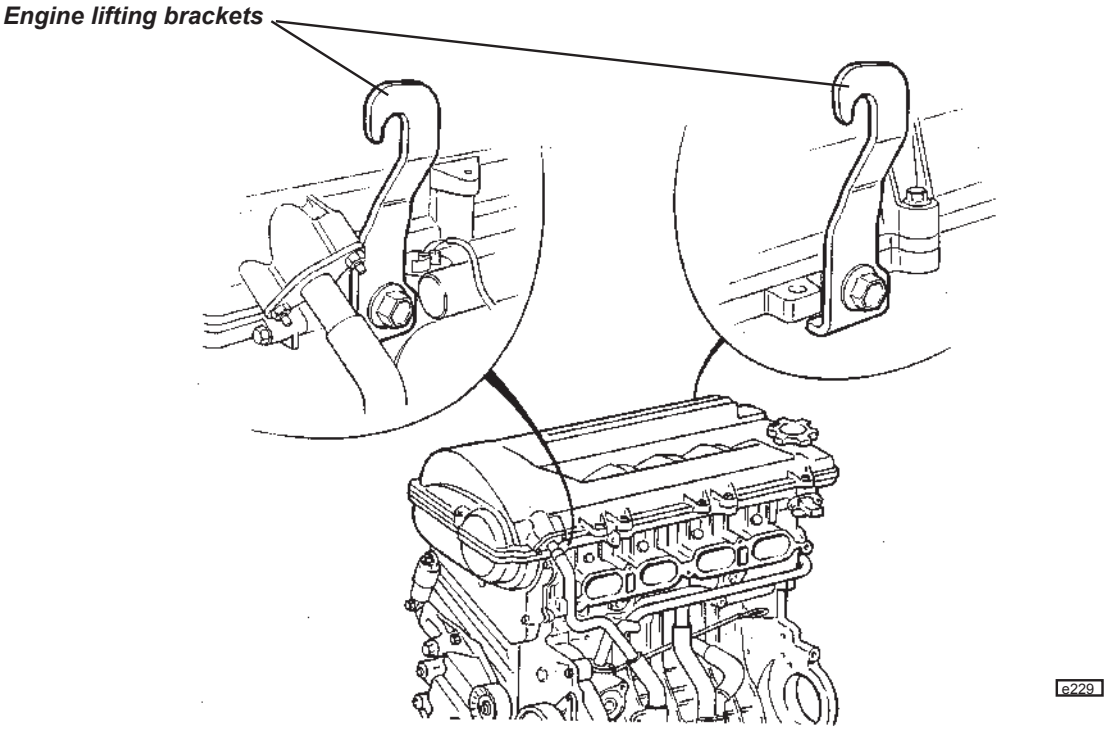

17. Carefully hoist the power unit from the car, whilst monitoring for any remaining connections.

Refit the unit in reverse order to removal with the following notes:

- Before re-fitting a driveshaft, first renew the round section circlip on the end of the left hand inboard joint spigot shaft, and lubricate the circlip with grease. Also, check the condition of the transmission output seal, and renew if necessary. Lubricate the lip of the seal with transmission oil, and grease the corresponding shoulder on the driveshaft (C.V. joint) spigot, to reduce the danger of damaging the seal on assembly.
- Carefully insert the driveshaft into the transmission, with, on the left hand shaft, the two ends of the circlip positioned lowermost, and rotate the shaft if necessary to engage the splines. Press the inboard joint outer until a click indicates the engagement of the retaining circlip, if necessary using a brass drift and hammer. Pull on the body to ensure its security. On the right hand shaft, fit the bolts securing the extension shaft bearing to the engine mounted bracket, and torque to 64 Nm.
- Refer to section DH for rear suspension assembly details.
- For coolant refilling procedure, refer to section KH.
- For transmission details and gear cable adjustment, refer to section FJ.

EH.4 - SPECIAL TOOLS

The following engine special tools are available under Lotus part number:

Engine Lift Bracket	T000T1437S	2 off
Bolt, engine lift bracket	T000T1440S	2 off
Oil Filter Wrench	T000T1441F	1 off
Valve Clearance Adjuster Set	T000T1442F	1 off
Crankshaft Pulley Holding Tool	T000T1443F	1 off
Flange Holding Tool	T000T1444F	1 off

Downloaded from www.Manualslib.com manuals search engine

EH.5 - ENGINE MANAGEMENT COMPONENT LOCATION

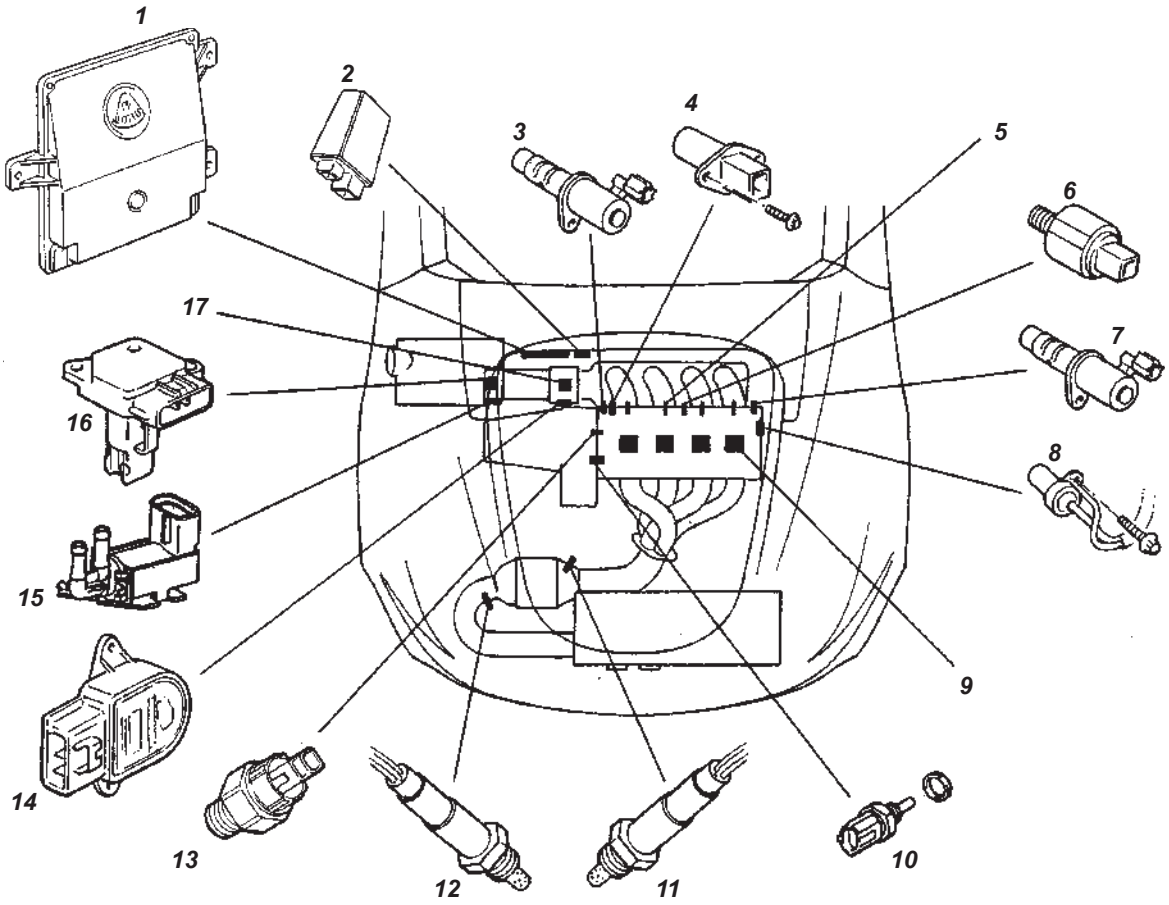

Key to engine management component location drawing

1. Electronic Control Unit (ECU).
2. Multi-function relay unit.
3. Oil control valve for variable valve lift.
4. Camshaft position sensor.
5. Fuel injector.
6. Knock sensor.
7. Oil control valve for variable valve timing.
8. Crankshaft position sensor.
9. Plug top coil.
10. Coolant temperature sensor.
11. Pre-catalyst oxygen sensor.
12. Post-catalyst oxygen sensor.
13. Oil pressure switch.
14. Throttle position sensor.
15. Vacuum solenoid for intake flap valve.
16. Mass airflow sensor.
17. Idle Air Control (IAC) valve (prior '06 M.Y.)

For component replacement procedures, refer to manual B120T0327J. For diagnostic codes, refer to Section EMP.

Downloaded from www.Manualslib.com manuals search engine

EH.6 - ELISE S SUPPLEMENT

The Elise S, introduced in May 2006 uses the Toyota '1ZZ-FE' engine instead of the '2ZZ-GE' fitted in the Elise 111R. The two engines are similar in basic architecture, with the 2ZZ having been derived from the 1ZZ, and whilst the overhaul procedures are largely common, many of the principal components are different. This section identifies the main differences between the two engine types.

Valve Mechanism

The 1ZZ uses the same VVT-i 'intelligent' variable intake valve timing system as used on 2ZZ, but without the intake and exhaust variable valve lift feature. Valve clearance adjustment via selective cam followers rather than 'top hat' shims. Airbox flap valve programmed to open at 5,000 rpm. Lower rpm limits (see below).

Dimensions

The bore and stroke differ between the two engines, although the capacity difference favours the 2ZZ by only 2cc. The 1ZZ is more undersquare with dimensions of 79.0 x 91.5mm producing 1794cc (2ZZ: 82.0 x 85.0 = 1796cc). The angle between intake and exhaust valves on the 1ZZ is 10° less at 33°, to permit a compact cylinder head without the requirement to accommodate variable valve lift. The compression ratio is dropped from 11.5 to 10.0:1.

Cylinder Block

The open deck alloy cylinder block of the 1ZZ uses dry, thin wall, non-replaceable, cast iron cylinder liners (2ZZ uses integrated MMC cylinder walls).

Manifolds

The inlet manifold is moulded in plastic to reduce weight and heat transference, and incorporates a resonator feature to optimise gas pulsations for mid-range performance. A unique adaptor is used to link the manifold to the electronic throttle body which differs from the 2ZZ and other 1ZZ types.

The simplified exhaust manifold and downpipe dispense with the divider plate used on the 2ZZ.

Cooling System

The cooling system is largely unchanged, with all 1ZZ cars using the oil/water heat exchanger and no front mounted oil coolers. The throttle body is heated as previously, although the feed and return connections differ in detail and no in-line throttle body thermostat is used.

Technical Data

		1ZZ-FE	**2ZZ-GE** (reference)
Capacity		1794 cc	1796 cc
Bore		79.0 mm	82.0 mm
Stroke		91.5 mm	85.0 mm
Valve control		VVT-i	VVTL-i
Compression ratio		10.0:1	11.5:1
Compression pressure (250 rpm, normal run temp.)	- new	1500 kPa (218 psi)	1400 kPa (203 psi)
	- min.	1000 kPa (145 psi)	1000 kPa (145 psi)
Spark plugs - type		NGK BKR5EYA-11	NGK IFR6A-11
		Denso K16R-U11	
- gap		1.0 ± 0.05mm	1.1 mm
Peak power (1999/99/EC)		100 kW (136 PS)	141 kW (192 PS)
		@ 6,200 rpm	@ 7,800 rpm
Peak torque (1999/99/EC)		172 Nm	181 Nm
		@ 4,200 rpm	@ 6,800 rpm
Maximum continuous engine speed		6,800 rpm	8,000 rpm
Maximum transient engine speed		7,150 rpm	8,500 rpm
Exhaust emissions (Euro 4 & LEV 1)	- CO	0.23 g/km	0.42 g/km
	- HC	0.050 g/km	0.078 g/km
	- NOx	0.0217 g/km	0.0121 g/km
	- HC + NOx	0.0717 g/km	0.07921 g/km
	- CO_2 (combined)	196 g/km	208 g/km

Downloaded from www.Manualslib.com manuals search engine

ENGINE MANAGEMENT

SECTION EMP

	Sub-Section	Page
Diagnostic Trouble Code List	EMP.1	3
'Lotus Scan' Diagnostic Tool	EMP.2	43
Engine Management Component Location	EMP.3	45
Mechanical Throttle Setting Procedure	EMP.4	46
2006 Model Year Electronic Throttle Control	EMP.5	47
Diagnostic Trouble Code Supplement - '06 M.Y.	EMP.6	48

sn_emp_cyclone.indd 1 03/03/2006 11:03:33
Downloaded from www.Manualslib.com manuals search engine

EMP.1 - DIAGNOSTIC TROUBLE CODE LIST

DTC	Fault description	Page
P0011	Camshaft Position - Timing Over-Advanced or System Performance	4
P0012	Camshaft Position - Timing Over-Retarded	4
P0076	Intake Valve Control Solenoid Circuit Low	4
P0077	Intake Valve Control Solenoid Circuit High	4
P0101	Mass or Volume Air Flow Circuit Range/Performance	5
P0102	Mass or Volume Air Flow Circuit Low Input	5
P0103	Mass or Volume Air Flow Circuit High Input	5
P0106	Manifold Absolute Pressure/Barometric Pressure Circuit Range/Performance	7
P0107	Manifold Absolute Pressure/Barometric Pressure Circuit Low Input	7
P0108	Manifold Absolute Pressure/Barometric Pressure Circuit High Input	7
P0111	Intake Air Temperature Sensor 1 Circuit Range/Performance	8
P0112	Intake Air Temperature Sensor 1 Circuit Low	8
P0113	Intake Air Temperature Sensor 1 Circuit High	8
P0116	Engine Coolant Temperature Circuit Range/Performance	10
P0117	Engine Coolant Temperature Circuit Low	10
P0118	Engine Coolant Temperature Circuit High	10
P0121	Throttle Position Sensor 'A' Circuit Range/Performance	12
P0122	Throttle Position Sensor 'A' Circuit Low	12
P0123	Throttle Position Sensor 'A' Circuit High	12
P0128	Coolant Thermostat (Coolant Temperature Below Thermostat Regulating Temperature)	14
P0131	O2 Sensor Circuit Low Voltage (Pre Catalyst)	15
P0132	O2 Sensor Circuit High Voltage (Pre Catalyst)	15
P0133	O2 Sensor Circuit Slow Response (Pre Catalyst)	15
P0134	O2 Sensor Circuit No Activity Detected (Pre Catalyst)	15
P0135	O2 Sensor Heater Circuit (Pre Catalyst)	15
P0137	O2 Sensor Circuit Low Voltage (Post Catalyst)	18
P0138	O2 Sensor Circuit High Voltage (Post Catalyst)	18
P0139	O2 Sensor Circuit Slow Response (Post Catalyst)	18
P0140	O2 Sensor Circuit No Activity Detected (Post Catalyst)	18
P0141	O2 Sensor Heater Circuit (Post Catalyst)	18
P0171	System Too Lean	20
P0172	System Too Rich	20
P0201	Injector Circuit/Open – Cylinder 1	21
P0202	Injector Circuit/Open – Cylinder 2	21
P0203	Injector Circuit/Open – Cylinder 3	21
P0204	Injector Circuit/Open – Cylinder 4	21
P0300	Random/Multiple Cylinder Misfire Detected	22
P0301	Cylinder 1 Misfire Detected	22
P0302	Cylinder 2 Misfire Detected	22
P0303	Cylinder 3 Misfire Detected	22
P0304	Cylinder 3 Misfire Detected	22
P0324	Knock Control System Error	24
P0327	Knock Sensor 1 Circuit Low	24
P0328	Knock Sensor 1 Circuit High	24
P0335	Crankshaft Position Sensor “A” Circuit Range/Performance	25
P0340	Camshaft Position Sensor “A” Circuit	26
P0351	Ignition Coil “A” Primary/Secondary Circuit	27
P0352	Ignition Coil “B” Primary/Secondary Circuit	27
P0353	Ignition Coil “C” Primary/Secondary Circuit	27
P0354	Ignition Coil “D” Primary/Secondary Circuit	27
P0420	Catalyst System Efficiency Below Threshold	28
P0441	Evaporative Emission System Incorrect Purge Flow	29
P0442	Evaporative Emission System Leak Detected (small leak)	29

sn_emp_cyclone.indd 2 03/03/2006 11:03:33
Downloaded from www.Manualslib.com manuals search engine

DTC	Fault description	Page
P0444	Evaporative Emission System Purge Control Valve Circuit Open	31
P0445	Evaporative Emission System Purge Control Valve Circuit Shorted	31
P0446	Evaporative Emission System Vent Control Circuit	31
P0447	Evaporative Emission System Vent Control Circuit Open	31
P0448	Evaporative Emission System Vent Control Circuit Shorted	31
P0451	Evaporative Emission System Pressure Sensor/Switch Range/Performance	31
P0452	Evaporative Emission System Pressure Sensor/Switch Low	31
P0453	Evaporative Emission System Pressure Sensor/Switch High	31
P0455	Evaporative Emission System Leak Detected (large leak)	29
P0456	Evaporative Emission System Leak Detected (very small leak)	29
P0461	Fuel Level Sensor “A” Circuit Range/Performance	32
P0462	Fuel Level Sensor “A” Circuit Low	32
P0463	Fuel Level Sensor “A” Circuit High	32
P0480	Fan 1 Control Circuit	33
P0481	Fan 2 Control Circuit	33
P0500	Vehicle Speed Sensor “A”	34
P0506	Idle Air Control System RPM Lower Than Expected	35
P0507	Idle Air Control System RPM Higher Than Expected	35
P0508	Idle Air Control System Circuit Low	35
P0509	Idle Air Control System Circuit High	35
P0562	System Voltage Low	36
P0563	System Voltage High	36
P0601	Watchdog	37
P0606	Checksum	37
P0627	Fuel Pump Control Circuit /Open	38
P0646	A/C Clutch Relay Control Circuit Low	39
P0647	A/C Clutch Relay Control Circuit High	39
P1301	Misfire level causing emissions increase	40
P1302	Misfire level causing catalyst system damage	40
P2602	Coolant Pump Control Circuit Low	41
P2603	Coolant Pump Control Circuit High	41
P2646	A Rocker Arm Actuator System Performance or Stuck Off	42
P2647	A Rocker Arm Actuator System Stuck On	42
P2648	A Rocker Arm Actuator Control Circuit Low	42
P2649	A Rocker Arm Actuator Control Circuit High	42

When applicable, reference may be made under the 'Notes' heading to a page in the Toyota service manual. This information should be used only for diagnosis and connection detail of the **sensor**. The Elise/Exige uses a Lotus ECU, the connections for which may be found in circuit diagrams in Section MP. Diagnostic Trouble Codes should be read using a Lotus Scan tool T000T1418F.

For 2006 M.Y. Trouble Codes see Section EMP.6

sn_emp_cyclone.indd 3 03/03/2006 11:03:34
Downloaded from www.Manualslib.com manuals search engine

Camshaft Timing Control (VVT) **P0011**
P0012
P0076
P0077

P0011 Camshaft Position – Timing Over-Advanced or System Performance
P0012 Camshaft Position – Timing Over-Retarded
P0076 Intake Valve Control Solenoid Circuit Low
P0077 Intake Valve Control Solenoid Circuit High

Description
The Variable Valve Timing system (VVT) on the intake camshaft can vary the timing by approximately 25°. The camshaft relative position is varied by a system of vanes mounted on the drive end of the camshaft. The VVT oil control valve modulates a spool valve position in accordance with the drive signal duty cycle, this in turns controls the oil pressure applied to the vanes. A 50% duty cycle applied to the valve will hold the valve current timing by preventing oil flow from the VVT controller housing, a duty cycle less than 50% will retard the valve timing, a duty cycle greater then 50% will advance the valve timing.

Component connections

Sensor Connector	*Description*	*ECU Pin*	*ECU Connector*	
1	Battery Voltage	-	-	
2	VVT Oil Control Valve	49 (J3)	52 Way (Right)	**'06 M.Y. in brackets**

P0011, P0012

Monitor: Continuous

Enable Criteria:
- Engine running > 30 secs
- Coolant temperature > 60°C (140°F)

Disable Criteria:
P0116, P0117, P0118 – Coolant temperature fault codes

Potential failure modes:
- Static valve timing is incorrect
- VVT camshaft actuator failure
- VVT valve stuck open / closed

P0076, P0077

Monitor: Continuous

Enable Criteria: Engine running

Disable Criteria: None

Potential failure modes:
- VVT valve open circuit
- VVT valve short to ground
- ECU output circuit failure

Notes:
The MIL will be illuminated if the faults are present for 2 consecutive trips

sn_emp_cyclone.indd 4 03/03/2006 11:03:34
Downloaded from www.Manualslib.com manuals search engine

Intake Air Flow **P0101**
P0102
P0103

P0101 Mass or Volume Air Flow Circuit Range/Performance
P0102 Mass or Volume Air Flow Circuit Low Input
P0103 Mass or Volume Air Flow Circuit High Input

Description
The Mass Air Flow (MAF) sensor is incorporated into the airbox, and measures both intake air flow rate and Intake Air Temperature (IAT). The MAF sensor uses a platinum hot wire and a cold wire element. By controlling the current flow through the hot wire to maintain a constant temperature, and therefore known resistance, any change in air flow and therefore temperature, will be detected by a change in resistance. This change of resistance is the output signal from the sensor.

Sensor connections

Sensor Connector	*Description*	*ECU Pin*	*ECU Connector*	
1	Battery Voltage	-	-	
2	MAF Ground	31 (D2)	52 Way (Right)	
3	MAF Signal	45 (B4)	52 Way (Right)	**'06 M.Y. in brackets**
4	IAT Signal	44 (B3)	52 Way (Right)	
5	IAT Ground	18 (D2)	52 Way (Right)	

Sensor characteristics
0 – 655 g/sec
Typical values: 1.5 – 5.0 g/sec (idle), 5.0 – 15.0 g/sec (2500rpm elevated idle no load)

Monitor: Continuous.

P0101

Enable Criteria:
- Engine running
- Engine speed >2490rpm
- TPS > 80% (P0101 – MAPS* too low)
- TPS < 5% (P0101 – MAPS* too high)

*(MAPS – Mass Air Per Stroke)

Disable Criteria:
P0122, P0123, P0222, P0223 – Throttle/Pedal position fault codes

Potential failure modes:
- MAF sensor battery voltage open circuit (MAF value (g/sec) = 0.0)
- MAF sensor signal open circuit or short to ground (MAF value (g/sec) = 0.0)
- MAF sensor ground open circuit (MAF value (g/sec) > 229.0)

P0102

Enable Criteria: Engine running

Disable Criteria: None

Potential failure modes:
- MAF sensor battery voltage open circuit (MAF value (g/sec) = 0.0)
- MAF sensor signal open circuit or short to ground (MAF value (g/sec) = 0.0)
- MAF sensor ground open circuit (MAF value (g/sec) > 229.0)

sn_emp_cyclone.indd 5 03/03/2006 11:03:34
Downloaded from www.Manualslib.com manuals search engine

P0103

Enable Criteria: Engine running

Disable Criteria: None

Potential failure modes:
- MAF sensor battery voltage open circuit (MAF value (g/sec) = 0.0)
- MAF sensor signal open circuit or short to ground (MAF value (g/sec) = 0.0)
- MAF sensor ground open circuit (MAF value (g/sec) > 229.0)

Notes:
- The MIL will be illuminated if the faults are present for 2 consecutive trips
- Further information on the sensor may be found in Toyota 1ZZ-FE, 2ZZ-GE manual RM733E (B120T0327J) Page DI-26 to DI-32

sn_emp_cyclone.indd 6 03/03/2006 11:03:34
Downloaded from www.Manualslib.com manuals search engine

Barometric Pressure **P0106**
P0107
P0108

P0106 Manifold Absolute Pressure/Barometric Pressure Circuit Range/Performance
P0107 Manifold Absolute Pressure/Barometric Pressure Circuit Low Input
P0108 Manifold Absolute Pressure/Barometric Pressure Circuit High Input

Description
The barometric pressure sensor is located internally within the ECU, and measures atmospheric pressure. This parameter is required to compensate the mass air flow when the vehicle is operated at higher altitudes.

Monitor: Continuous

P0106

Enable Criteria:
- Engine running
- Engine speed 2190 – 3510rpm
- TPS > 80%

Disable Criteria:
P0101, P0102, P0103 – MAF Sensor fault codes
P0121, P0122, P0123, P0222, P0223, P2135 – Throttle/Pedal position fault codes

Potential failure modes:
Sensor failure

P0107, P0108

Enable Criteria: Engine running

Disable Criteria: None

Potential failure modes:
Sensor failure

Notes:
The MIL will be illuminated if the fault is present for 2 consecutive trips

sn_emp_cyclone.indd 7 03/03/2006 11:03:34
Downloaded from www.Manualslib.com manuals search engine

Intake Air Temperature **P0111**
P0112
P0113

P0111 Intake Air Temperature Sensor 1 Circuit Range/Performance
P0112 Intake Air Temperature Sensor 1 Circuit Low
P0113 Intake Air Temperature Sensor 1 Circuit High

Description
The combined sensor which measure both Mass Air Flow (MAF) and Intake Air Temperature (IAT) is incorporated into the airbox. The IAT sensor is a thermistor device which changes resistance with temperature. As air intake temperature decreases the thermistor resistance value increases, and conversely as air temperature increases so the thermistor resistance value decreases.

Sensor connections

Sensor Connector	*Description*	*ECU Pin*	*ECU Connector*	
1	Battery Voltage	-	-	
2	MAF Ground	31 (D2)	52 Way (Right)	
3	MAF Signal	45 (B4)	52 Way (Right)	**'06 M.Y. in brackets**
4	IAT Signal	44 (B3)	52 Way (Right)	
5	IAT Ground	18 (D2)	52 Way (Right)	

Sensor characteristics

IAT -20°C (-4°F)	12.5 – 16.9 kΩ
IAT 20°C (68°F)	2.19 – 2.67 kΩ
IAT 60°C (140°F)	0.50 – 0.68 kΩ

Monitor: Continuous

P0111

Enable Criteria:
- Engine running < 30 secs
- Coolant temperature < 30°C (86°F)

Disable Criteria:
P0116, P0117, P0118 – Coolant temperature fault codes

Potential failure modes:
- P0112 – signal short circuit
- P0113 – signal open circuit
- Sensor failure

P0112

Enable Criteria: Engine running

Disable Criteria: None

Potential failure modes:
- Signal short circuit (IAT = –40°C (–104°F) < 0.049 V)
- Sensor failure

sn_emp_cyclone.indd 8 03/03/2006 11:03:35
Downloaded from www.Manualslib.com manuals search engine

P0113

Enable Criteria: Engine running

Disable Criteria: None

Potential failure modes:
- Signal open circuit (IAT > 140°C (284°F) > 4.932 V)
- Sensor failure

Notes:
- The MIL will be illuminated if the fault is present for 2 consecutive trips
- Further information on the sensor may be found inToyota 1ZZ-FE, 2ZZ-GE manual RM733E (B120T0327J) pages DI-33 to DI-38

sn_emp_cyclone.indd 9 03/03/2006 11:03:35
Downloaded from www.Manualslib.com manuals search engine

Engine Coolant Temperature **P0116**
P0117
P0118

P0116 Engine Coolant Temperature Circuit Range/Performance
P0117 Engine Coolant Temperature Circuit Low
P0118 Engine Coolant Temperature Circuit High

Description
The engine coolant temperature sensor is a thermistor device which changes resistance with temperature. As coolant temperature decreases the thermistor resistance value increases, and conversely as coolant temperature increases so the thermistor resistance value decreases.

Sensor connections

Sensor Connector	*Description*	*ECU Pin*	*ECU Connector*	
1	Ground	7 (H1)	52 Way (Right)	**'06 M.Y. in brackets**
2	Signal	33 (C3)	52 Way (Right)	

Sensor characteristics

0°C (32°F)	= 3.279 V
19.4°C (67°F)	= 2.186 V
42.5°C (108.5°F)	= 1.249 V
80°C (176°F)	= 0.469 V

P0116

Enable Criteria:
Engine running > 800 seconds

Disable Criteria: None

Potential failure modes:
- P0117 – signal short circuit
- P0118 – signal open circuit
- Sensor failure

P0117

Enable Criteria: Engine running

Disable Criteria: None

Potential failure modes:
- Signal short circuit (Coolant Temperature = –40°C (–104°F) < 0.029 V)
- Sensor failure

P0118

Enable Criteria: Engine running

Disable Criteria: None

Potential failure modes:
- Signal open circuit (Coolant Temperature > 140°C (284°F) > 4.892 V)
- Sensor failure

sn_emp_cyclone.indd 10 03/03/2006 11:03:35
Downloaded from www.Manualslib.com manuals search engine

Notes:

- The MIL will be illuminated if the fault is present for 2 consecutive trips
- Further information on the sensor may be found inToyota 1ZZ-FE, 2ZZ-GE manual RM733E (B120T0327J) page DI-39 to DI-45

sn_emp_cyclone.indd 11 03/03/2006 11:03:35
Downloaded from www.Manualslib.com manuals search engine

Throttle Position **P0121**
P0122
P0123

P0121 Throttle Position Sensor 'A' Circuit Range/Performance
P0122 Throttle Position Sensor 'A' Circuit Low
P0123 Throttle Position Sensor 'A' Circuit High

Description
The Throttle Position Sensor (TPS) is a potentiometer device, which is connected to a 5V reference source, a ground and an input signal to the ECU.

Sensor connections

Sensor Connector	*Description*	*ECU Pin*	*ECU Connector*	
1	Ground	34 (D1)	52 Way (Right)	
2	5V Ref.	8 (M4)	52 Way (Right)	**'06 M.Y. in brackets**
3	TPS1 Signal	20 (D3)	52 Way (Right)	
4	TPS2 Signal	(E3)	(Right)	

Sensor characteristics
0% = 0.595 V ± 5%
100% = 4.148 V ± 5%

Monitor: Continuous.

P0121

Enable Criteria:
Rationality check – throttle not too high at low engine load:
- Engine running
- TPS > 80%
- Engine speed >1500rpm
- MAPS* < 40%
- Vehicle Speed > 30 km/h (18.6mph)

OR
Rationality check – throttle not too low at high engine load:
- Engine running
- TPS < 10%
- Engine speed 1500 – 2010rpm
- MAPS* > 65%

*(MAPS – Mass Air Per Stroke)

Disable Criteria:
P0101, P0102, P0103 – MAF Sensor fault codes
P0500 – Vehicle Speed sensor
P0016 – Crankshaft/Camshaft position correlation error

Potential failure modes:
- Sensor short or open circuit
- Sensor failure

sn_emp_cyclone.indd 12 03/03/2006 11:03:35
Downloaded from www.Manualslib.com manuals search engine

P0122

Enable Criteria: None

Disable Criteria:
P0016 – Crankshaft/Camshaft position correlation error

Potential failure modes:
- Signal short circuit (< 0.283 V)
- Reference voltage open circuit
- Reference voltage short to ground
- Sensor failure

P0123

Enable Criteria: None

Disable Criteria:
P0016 – Crankshaft/Camshaft position correlation error

Potential failure modes:
- Signal open circuit (> 4.487 V)
- Reference voltage open circuit
- Reference voltage short to ground
- Sensor failure

Notes:
- The MIL will be illuminated if the fault is present for 2 consecutive trips
- Further information on the sensor may be found inToyota 1ZZ-FE, 2ZZ-GE manual RM733E (B120T0327J) page DI-45 to DI-52

sn_emp_cyclone.indd 13 03/03/2006 11:03:35
Downloaded from www.Manualslib.com manuals search engine

Coolant Thermostat **P0128**

P0128 Coolant Thermostat (Coolant Temperature Below Thermostat Regulating Temperature)

Description
The thermostat diagnostic is enabled after each cold engine start, and monitors the rate of temperature rise during warm up relative to the measured engine air flow.

Monitor: Continuous

Enable Criteria:
- Engine running
- Coolant Temperature > -10°C (14°F)
- Coolant Temperature < 70°C (158°F)

Disable Criteria:
P116, P117, P118 – Engine Coolant Temperature sensor faults

Potential failure modes:
Thermostat failure

Notes:
The MIL will be illuminated if the fault is present for 2 consecutive trips.

sn_emp_cyclone.indd 14 03/03/2006 11:03:35
Downloaded from www.Manualslib.com manuals search engine

O2 Sensor (Pre Catalyst) **P0131**
P0132
P0133
P0134
P0135

P0131 O2 Sensor 1 Circuit Low Voltage
P0132 O2 Sensor 1 Circuit High Voltage
P0133 O2 Sensor 1 Circuit Slow Response
P0134 O2 Sensor 1 Circuit No Activity Detected
P0135 O2 Sensor 1 Heater Circuit

Description
The oxygen sensor monitors the oxygen content in the exhaust gases. The sensor consists of a zirconia electrode between two platinum plates. When zirconia comes into contact with oxygen, it becomes an electrical conductor. The exhaust gases pass through louvers in the sensor. One plate is in contact with the outside air and the other plate is in contact with the exhaust gases. The platinum plate in contact with the air is electrically negative due to the oxygen in the atmosphere and the plate in contact with the exhaust gases is electrically positive. This will cause a difference in electrical potential to develop between the two plates. Thus the voltage across the platinum plates ranges approximately from 100 millivolts to 900 millivolts, depending on the oxygen content of the exhaust gases. Thus when the air/fuel mixture is rich, the oxygen sensor output will be high. If the air/fuel mixture is lean, the oxygen sensor output will be low.

Sensor connections

Sensor Connector	*Description*	*ECU Pin*	*ECU Connector*	
1	Signal	15 (A3)	52 Way (Left)	
2	Ground	41 (F4)	52 Way (Left)	**'06 M.Y. in brackets**
3	Heater	1 (K3)	52 Way (Left)	
4	Battery Voltage	-	-	

Sensor characteristics
Normal operating range is 0 – 1000mV

Malfunction Criteria

P0131
Set when the sensor operates below 5mV for more than 1.5 seconds consecutively for a specified number of times.

Monitor: Continuous

Disable Criteria: DFCO (Deceleration Fuel Cut Off)

Potential failure modes:
- Low fuel pressure (Lean mixture)
- Malfunctioning sensor
- External water on sensor
- Sensor wire shorted to ground

P0132
Set when the sensor operates above 1200mV for more than 1.5 seconds consecutively for a specified number of times.

Monitor: Continuous

sn_emp_cyclone.indd 15 03/03/2006 11:03:36
Downloaded from www.Manualslib.com manuals search engine

Potential failure modes:
- High fuel pressure (Rich mixture)
- Leaking or shorted injector
- Purge valve fault
- Oxygen sensor contamination
- Engine oil contamination
- Sensor wire

P0133
Set when the sensor fails to switch from a Lean to a Rich condition or switch from a Rich to a Lean condition in a sufficiently timely manner. A selection of switches is used to determine the average times.

Enable Criteria:
- Vehicle speed between 0 – 255 km/h (158.5 mph)
- MAF per stroke between 15 – 70 mg
- Engine speed between 2600 – 3511rpm
- Engine run time > 200 seconds
- Coolant temperature > 60°C (140°F)
- Closed loop fuelling enabled

Disable Criteria:
P0116, P0117, P0118 – Coolant temperature sensor faults
P0131, P0132, P0134, P0135 – Pre catalyst oxygen sensor faults
P0101, P0102, P0103 – MAF sensor faults

Monitor:
Monitored until the required amount of switches in both directions has been achieved (Approx. 150 sec)

Potential failure modes:
- Sensor connector and wiring should be checked for corrosion and loose connections
- Sensor contaminated, possibly from fuel, improper use of RTV, engine oil or coolant

P0134
Set when the sensor fails to switch above 557mV ('06 M.Y.; 675mV) and below 400mV within a 5.1 second period for 5 consecutive checks ('06 M.Y.; within 60 sec).

Enable Criteria:
- Engine run time > 30 seconds
- Engine is not at idle
- Engine is in closed loop fuel control

Monitor:
Until either passed or failed (5.1 x 5 = 25.5 sec + initial 30 sec = 55 sec maximum).

Potential failure modes:
Sensor connector and wiring should be checked for corrosion and loose connections.

P0135
Set when the sensor output is greater than 1900mA or less than 250mA for 1.5 seconds, for 40 consecutive checks.

Enable Criteria:
Engine run time > 60 seconds

Monitor:
Continuous

sn_emp_cyclone.indd 16 03/03/2006 11:03:36
Downloaded from www.Manualslib.com manuals search engine

Potential failure modes:
Sensor connector and wiring should be checked for corrosion and loose connections.

Notes:
- The MIL will be illuminated if the fault is present for 2 consecutive trips.
- Further information on the sensor may be found inToyota 1ZZ-FE, 2ZZ-GE manual RM733E (B120T0327J) pages DI-53 to DI-62

sn_emp_cyclone.indd 17 03/03/2006 11:03:36
Downloaded from www.Manualslib.com manuals search engine

O2 Sensor (Post Catalyst) **P0137**
P0138
P0139
P0140
P0141

P0137 O2 Sensor Circuit Low Voltage
P0138 O2 Sensor Circuit High Voltage
P0139 O2 Sensor Circuit Slow Response
P0140 O2 Sensor Circuit No Activity Detected
P0141 O2 Sensor Heater Circuit

Description
The oxygen sensor monitors the oxygen content in the exhaust gases. The sensor consists of a zirconia electrode between two platinum plates. When zirconia comes into contact with oxygen, it becomes an electrical conductor. The exhaust gases passes through louvers in the sensor. One plate is in contact with the outside air and the other plate is in contact with the exhaust gases. The platinum plate in contact with the air is electrically negative due to the oxygen in the atmosphere and the plate in contact with the exhaust gases is electrically positive. This will cause a difference in electrical potential to develop between the two plates. Thus the voltage across the platinum plates ranges approximately from 100 millivolts to 900 millivolts, depending on the oxygen content of the exhaust gases. Thus when the air/fuel mixture is rich, the oxygen sensor output will be high. If the air/fuel mixture is lean, the oxygen sensor output will be low. The post catalyst oxygen sensor performance is a good indicator of catalyst efficiency.

Sensor connections

Sensor Connector	*Description*	*ECU Pin*	*ECU Connector*	
1	Signal	3 (B3)	52 Way (Left)	
2	Ground	29 (F4)	52 Way (Left)	**'06 M.Y. in brackets**
3	Heater	27 (H3)	52 Way (Left)	
4	Battery Voltage	-	-	

Sensor characteristics
Normal operating range is 0 – 1000mV

Malfunction Criteria

P0137
Set when the sensor operates below 5mV for more than 1.5 seconds consecutively for a specified number of times.

Monitor: Continuous

Disable Criteria: DFCO (Deceleration Fuel Cut Off)

Potential failure modes:
- Check and rectify any pre catalyst sensor fault code, as they may be causing the fault code to be set
- Sensor wire shorted to ground
- Catalyst

P0138
Set when the sensor operates above 1200mV for more than 1.5 seconds consecutively for a specified number of times.

Monitor: Continuous

sn_emp_cyclone.indd 18 03/03/2006 11:03:36
Downloaded from www.Manualslib.com manuals search engine

Potential failure modes:
- Check and rectify any front sensor fault code, as they may be causing the fault code to be set
- Catalyst

P0139
Set when the sensor fails to reach 650mV after 1.9 seconds of P.E or when the sensor fails to drop below 150mV after 5 seconds of DFCO ('06 M.Y.; Set when sensor fails to switch between 250mV and 650mV with sufficient rapidity).

Enable Criteria:
- Engine run time > 200 seconds
- Coolant temperature > 60°C (140°F)
- Open loop fuel control
- DFCO (Deceleration Fuel Cut Off) followed by idle operation for 'lean to rich' switch
- DFCO for 'rich to lean' switch

Disable Criteria:

P0116, P0117, P0118	– Coolant Temperature Sensor faults
P0201, P0202, P0203, P0204	– Injector faults
P0300, P0301, P0302, P0303, P0304	– Misfire faults
P1301, P1302	– Misfire faults causing emission or catalyst damage

Monitor: Continuous, until the test is either passed or failed

Potential failure modes:
- Check and rectify any pre catalyst sensor fault code, as they may be causing the fault code to be set
- Catalyst

P0140
Set when the sensor fails to switch above 557mV and below 400mV within 60 seconds.

Enable Criteria:
- Engine run time > 30 seconds
- Engine is not at idle
- Engine is in closed loop fuel control

Monitor: Continuous

Potential failure modes:
- Check and rectify any front sensor fault code, as they may be causing the fault code to be set
- Sensor connector and wiring should be checked for corrosion and loose connections
- Catalyst

P0141
Set when the sensor output is greater than 1900mA or less than 250mA for 1.5 seconds, for 40 consecutive checks.

Enable Criteria: Engine run time > 60 seconds

Monitor: Continuous

Potential failure modes:
Sensor connector and wiring should be checked for corrosion and loose connections

Notes:
- The MIL will be illuminated if the fault is present for 2 consecutive trips.
- Further information on the sensor may be found in Toyota 1ZZ-FE, 2ZZ-GE manual RM733E (B120T0327J) pages DI-63 to DI-66

sn_emp_cyclone.indd 19 03/03/2006 11:03:36
Downloaded from www.Manualslib.com manuals search engine

Fuel Control System Too Lean Or Rich **P0171**
P0172

P0171 System Too Lean
P0172 System Too Rich

Description
The oxygen sensor sends a signal to the ECU corresponding to the exhaust gas oxygen content enabling the ECU to maintain a 14.7:1 air/fuel ratio under normal driving conditions. The ECU can make fuel corrections of ± 17% to the calculated fuel demand. If the ECU determines a rich condition exists (oxygen sensor above 0.450mV), it will decrease the calculated fuel demand to maintain a 14.7:1 ratio. If the ECU determines a lean condition exists (oxygen sensor below 0.450mV), it will increase the calculated fuel demand to maintain a 14.7:1 ratio.

Enable Criteria
- Fuel Trim condition enabled
- Closed loop fuelling enabled
- Engine speed > 1100 rpm
- MAF > 6 g/sec
- Engine load < 70 %
- Altitude < 8000 ft (2438 m), Baro > 756 mbar
- Inlet air temperature > -10°C (14°F)

Disable Criteria

P0106, P0107, P0108	– Baro sensor faults
P0111, P0112, P0113	– Air Intake Sensor faults
P0131, P0132, P0133, P0134, P0135	– Oxygen sensor faults
P0300, P0301, P0302, P0303, P0304	– Misfire faults
P0441, P0442, P0443, P0447, P0448, P0450, P0451, P0455, P0456	– EVAP faults

Monitor: Continuous

Malfunction Criteria
P0171
This code is set when the calculated fuel demand has been increased to its maximum limit of 17% and the system still cannot maintain an air/fuel ratio of 14.7:1 under normal driving conditions.

Potential failure modes:
- Fuel Pressure too low
- Air leak in system
- Water in fuel
- Exhaust leak / crack before front oxygen sensor
- Injector fault
- Sensor connector and wiring for signs of corrosion or loose connections

P0172
This code is set when the calculated fuel demand has been decreased to its minimum limit of -17% and the system still cannot maintain an air/fuel ratio of 14.7:1 under normal driving conditions.

Potential failure modes:
- Fuel Pressure too high
- Leaking fuel injector
- Restriction in the exhaust system or air intake / filter
- Erratic throttle position sensor

Notes:
- The MIL will be illuminated if the fault is present for 2 consecutive trips.
- Further information on the sensor may be found inToyota 1ZZ-FE, 2ZZ-GE manual RM733E (B120T0327J) pages DI-67 to DI-72

sn_emp_cyclone.indd 20 03/03/2006 11:03:36
Downloaded from www.Manualslib.com manuals search engine

Fuel Injection System **P0201**
P0202
P0203
P0204

P0201 Injector Circuit/Open – Cylinder 1
P0202 Injector Circuit/Open – Cylinder 2
P0203 Injector Circuit/Open – Cylinder 3
P0204 Injector Circuit/Open – Cylinder 4

Description
The ECU has four injector driver circuits, each of which controls an injector. When the engine is running the ECU continuously monitors the injector circuit feedback signals. The feedback signal should be low when the injector is ON and high voltage when the injector is OFF.

Component connections

Injector	*ECU Pin*	*ECU Connector*
1	25 (J1)	52 Way (Right)
2	51 (K4)	52 Way (Right)
3	14 (K3)	52 Way (Right)
4	40 (K2)	52 Way (Right)

'06 M.Y. in brackets

Malfunction Criteria
The operation of all the injector codes is the same, the last digit relates to the injector involved i.e. a code P0203 indicates there is a problem with injector number 3.

Enable Criteria: Engine running

Monitor: Continuous

Limp home:
- Limit maximum engine speed to 6000rpm
- Return the fuel system to open loop fuel control

Potential failure modes:
Sensor connector or wiring corroded or loose connections

Notes:
- The MIL will be illuminated if the fault is present for 2 consecutive trips.
- If an injector goes short circuit it is likely that the ECU injector driver will be damaged.

sn_emp_cyclone.indd 21 03/03/2006 11:03:37
Downloaded from www.Manualslib.com manuals search engine

Misfire **P0300**
P0301
P0302
P0303
P0304

P0300	Random/Multiple Cylinder Misfire Detected
P0301	Cylinder 1 Misfire Detected
P0302	Cylinder 2 Misfire Detected
P0303	Cylinder 3 Misfire Detected
P0304	Cylinder 4 Misfire Detected

Description
A misfiring cylinder can be detected by analysing crank speed variation. As a result of a combustion event there will be a net acceleration of the crankshaft. Subsequent to a misfire event the engine will decelerate over the period following the missed cylinder event.
Speed changes can be characterised by observing changes in the time period for a fixed angle of rotation after firing events. A significant change in this period, assessed by comparison to previous periods, may be attributed to misfire on a known cylinder.

Component connections **'06 M.Y. in brackets**

Connector	*Description*	*ECU Pin*				*ECU Connector*
1	Supply Voltage	Coil 1	Coil 2	Coil 3	Coil 4	
2	Ignition Coil Feedback	22 (F3)	22 (F3)	22 (F3)	22 (F3)	52 Way (Right)
3	Coil Output (Logic)	52 (G1)	26 (G4)	47 (G3)	48 (G2)	52 Way (Right)
4	Ground					

Malfunction Criteria
The operation of all the misfire codes is the same, the last digit relates to the misfire involved i.e. a code P0303 indicates there is a problem with coil number 3. P0300 indicates the misfire is random and not linked to one particular cylinder.

Enable Criteria:
- Battery voltage between 10 – 16 V
- Coolant temperature between -10 – 120°C (14 – 248°F)
- Engine speed between 660 – 8010rpm
- Engine speed transient > 15rpm
- Altitude < 8000 ft (2438 m) / Baro > 756mbar
- Fuel level > 5 litres (1.3 US gallons)
- Engine load between 15 – 48% depending on engine speed

Disable Criteria: DFCO enabled (Deceleration Fuel Cut Off)

Monitor: Continuous

Limp home:
- Limit maximum engine speed to 6000 rpm
- Return the fuel system to open loop
- ECU may deactivate two cylinders, the misfiring cylinder and it's matched other i.e. 1 & 4 or 2 & 3.

Potential failure modes:
- Injector related codes, as these can cause misfire codes to be set.
- VVT or VVL codes set
- Sensor connector and wiring for signs of corrosion or loose connections
- Spark plug / Cylinder compression
- Cam timing / Damage to rocker arm assembly

sn_emp_cyclone.indd 22 03/03/2006 11:03:37
Downloaded from www.Manualslib.com manuals search engine

Notes:

- The MIL will be illuminated if the fault is present for 2 consecutive trips.
- Further information on the sensor may be found inToyota 1ZZ-FE, 2ZZ-GE manual RM733E (B120T0327J) pages DI-73 to DI-78

sn_emp_cyclone.indd 23 03/03/2006 11:03:37
Downloaded from www.Manualslib.com manuals search engine

Knock Control System **P0324**
P0327
P0328

P0324 Knock Control System Error
P0327 Knock Sensor 1 Circuit Low
P0328 Knock Sensor 1 Circuit High

Description
The knock sensor contains a piezoelectric element which generates a voltage when it becomes deformed. The piezoelectric element sends the signal to the ECU, when the cylinder block vibrates due to engine knocking. If knock is detected then the ECU will retard the ignition to suppress it. The knock control sensor cannot differentiate between spark knock and other similar sounding noises.

Sensor connections

Sensor Connector	*Description*	*ECU Pin*	*ECU Connector*	
1	Sensor input	43 (C4)	52 Way (Right)	**'06 M.Y. in brackets**
2	Ground	13 (A4)	52 Way (Right)	

Malfunction Criteria
P0327 – This code is set when the knock sensor signal is < 0.586 V
P0328 – This code is set when the knock sensor signal is > 2.928 V

Potential failure modes:
- Abnormal engine noise, i.e. damaged engine or exhaust system contacting vehicle
- Knock sensor fixing too tight
- Sensor connector / wiring corroded or loose connections

Notes:
- The MIL will be illuminated if the fault is present for 2 consecutive trips.
- Further information on the sensor may be found inToyota 1ZZ-FE, 2ZZ-GE manual RM733E (B120T0327J) pages DI-79 to DI-81

sn_emp_cyclone.indd 24 03/03/2006 11:03:37
Downloaded from www.Manualslib.com manuals search engine

Engine Speed / Position Sensors **P0335**

P0335 Crankshaft Position Sensor “A” Circuit Range/Performance

Description
Engine speed is calculated by measuring the time between the ‘teeth’ of the crankshaft sensor trigger disc. The disc has 34 ‘teeth’ and 2 missing ‘teeth’, spaced at 10 degree intervals around the disc. The 2 missing ‘teeth’ are positioned at 225 degrees before cylinder No.1 and 4 TDC. The crankshaft sensor signal is also used to determine misfires events.

Sensor connections

Sensor Connector	*Description*	*ECU Pin*	*ECU Connector*	
1	Sensor input	4 (E1)	52 Way (Right)	**'06 M.Y. in brackets**
2	Ground	30 (E4)	52 Way (Right)	

Monitor: Continuous

Enable Criteria: Engine running

Disable Criteria: None

Potential failure modes:
- Sensor signal open circuit or short to ground
- Sensor ground open circuit
- Sensor failure

Notes:
- If a sensor or sensor circuit failure occurs, the engine will not fire or start.
- The MIL will be illuminated if the fault is present for 2 consecutive trips
- Further information on the sensor may be found inToyota 1ZZ-FE, 2ZZ-GE manual RM733E (B120T0327J) pages DI-82 to DI-83

sn_emp_cyclone.indd 25 03/03/2006 11:03:37
Downloaded from www.Manualslib.com manuals search engine

Engine Speed / Position Sensors **P0340**

P0340 Camshaft Position Sensor “A” Circuit

Description
The camshaft position input to the ECU is used to determine engine phase, enable sequential fuel injection control and to determine camshaft position for the VVT system. The inlet camshaft has three ‘teeth’ spaced 90° apart, which are detected by the electromagnetic sensor. The valve timing setting is measured in the ECU by measuring time from a (fixed position) crankshaft tooth to a (variable position) camshaft tooth. As the engine speed and the position is known from the crankshaft sensor signal, the camshaft position can be calculated.

Sensor connections

Sensor Connector	*Description*	*ECU Pin*	*ECU Connector*	
1	Signal(VR Input)	16 (C1)	52 Way (Right)	**'06 M.Y. in brackets**
2	Ground	42 (E2)	52 Way (Right)	

Monitor: Continuous

Enable Criteria:
- Engine running
- Engine speed > 600rpm

Disable Criteria: None

Potential failure modes:
- Sensor signal open circuit or short to ground
- Sensor ground open circuit
- Sensor failure

Notes:
- The MIL will be illuminated if the fault is present for 2 consecutive trips.
- Further information on the sensor may be found in Toyota 1ZZ-FE, 2ZZ-GE manual RM733E (B120T0327J) pages DI-84 to DI-85

sn_emp_cyclone.indd 26 03/03/2006 11:03:37
Downloaded from www.Manualslib.com manuals search engine

Ignition System **P0351**
P0352
P0353
P0354

P0351 Ignition Coil “A” Primary/Secondary Circuit
P0352 Ignition Coil “B” Primary/Secondary Circuit
P0353 Ignition Coil “C” Primary/Secondary Circuit
P0354 Ignition Coil “D” Primary/Secondary Circuit

Description
A Direct Ignition System (DIS) is used on the engine. The DIS improves the ignition accuracy, reduces high-voltage loss, and enhances the reliability of the ignition system. The DIS is a 1-cylinder system that ignites one cylinder with one ignition coil. The ECU determines the ignition timing and outputs the ignition signals (IGT) for each cylinder. Based on IGT signals, the power transistors in the igniter cuts off the current to the primary coil, which induces a spark at the spark plug connected to the secondary coil. The igniter will also send an ignition confirmation signal (IGF) as a fail-safe measure to the ECU.

Component connections **'06 M.Y. in brackets**

Connector Pin	*Description*	*ECU Pin*				*ECU Connector*
1	Supply Voltage	Coil 1	Coil 2	Coil 3	Coil 4	
2	Ignition Coil Feedback	22 (F3)	22 (F3)	22 (F3)	22 (F3)	52 Way (Right)
3	Coil Output (Logic)	52 (G1)	26 (G4)	47 (G3)	48 (G2)	52 Way (Right)
4	Ground					

Malfunction Criteria
No IGF signal to ECM while engine is running

Potential failure modes:
- Open or short in IGF1 – IGF4 circuit from ignition coil to ECU
- Coil failure

Notes:
- The MIL will be illuminated if the fault is present for 2 consecutive trips.
- Further information on the sensor may be found inToyota 1ZZ-FE, 2ZZ-GE manual RM733E (B120T0327J) pages DI-97 to DI-103

sn_emp_cyclone.indd 27 03/03/2006 11:03:37
Downloaded from www.Manualslib.com manuals search engine

Catalyst System Efficiency **P0420**

P0420 Catalyst System Efficiency Below Threshold

Description
The ECU compares the waveform of the oxygen sensors located before and after the catalyst to determine whether or not the catalyst has deteriorated. If the catalyst is functioning normally the front oxygen sensor will be switching between rich and lean whilst the rear oxygen sensor should also be switching between rich and lean but more slowly. When both the oxygen sensor waveforms change at the same rate, it indicates that the catalyst performance has deteriorated. The ECU counts the number of pre and post catalyst oxygen sensor switches and divides one by the other to determine a ratio number. If the ratio number is greater than 0.6 ('06 M.Y.; 0.165) the code is set.

Sensor connections
Pre catalyst oxygen sensor

Sensor Connector	*Description*	*ECU Pin*	*ECU Connector*	
1	Signal	15 (A3)	52 Way (Left)	
2	Ground	41 (F4)	52 Way (Left)	**'06 M.Y. in brackets**
3	Heater Supply	1 (K3)	52 Way (Left)	
4	Battery Voltage	-	-	

Post catalyst oxygen sensor

Sensor Connector	*Description*	*ECU Pin*	*ECU Connector*	
1	Signal	3 (B3)	52 Way (Left)	
2	Ground	29 (F4)	52 Way (Left)	**'06 M.Y. in brackets**
3	Heater Supply	27 (H3)	52 Way (Left)	
4	Battery Voltage	-	-	

Malfunction Criteria
- Closed loop fuel control enabled
- Coolant temperature > 60 °C (140 °F)
- Baro > 756 mbar
- Vehicle speed < 130 km/h (81 mph)
- MAF < 40 g/sec
- Air inlet temp > -10°C (14°F)

Disable Criteria:

P0101, P0102, P0103	– MAF faults
P0107, P0108	– MAP / Baro Faults
P0116, P0117, P0118	– Coolant temperature faults
P0131, P0132, P0133, P0134, P0135, P0137, P0138, P0139, P0140, P0141	– Oxygen sensor faults
P0171, P0172	– Fuelling faults
P0300, P0301, P0302, P0303, P0304	– Misfire faults

Potential failure modes:
- Exhaust system leak
- Oxygen sensor faults
- Oxygen sensor heater failure
- Catalyst failure

Notes:
- The MIL will be illuminated if the fault is present for 2 consecutive trips.
- Further information on the sensor may be found inToyota 1ZZ-FE, 2ZZ-GE manual RM733E (B120T0327J) pages DI-86 to DI-88

sn_emp_cyclone.indd 28 03/03/2006 11:03:38
Downloaded from www.Manualslib.com manuals search engine

Evaporative Emission Control – Leak Detection System **P0441**
P0442
P0455
P0456

P0441 Evaporative Emission System Incorrect Purge Flow
P0442 Evaporative Emission System Leak Detected (small leak)
P0455 Evaporative Emission System Leak Detected (large leak)
P0456 Evaporative Emission System Leak Detected (very small leak)

Description
During an Evaporative Emission System Leak Detection check, the vacuum in the system is monitored by ECU using the fuel tank pressure sensor. At the appropriate time, the test starts with the ECU closing the canister closure value and opening the purge solenoid with the appropriate duty cycle. This allows the engine to draw a vacuum on the entire evaporative emission system. After a calibrated vacuum level is achieved the purge solenoid is closed, sealing the system. A leak is detected by monitoring any decrease in vacuum level over a calibrated period of time.

Sensor / component connections
Vapour Pressure sensor

Connector Pins	*Description*	*ECU Pin*	*ECU Connector*	
1	Ground	78 (L4)	28 Way (Left)	
2	Signal	75 (C1)	28 Way (Left)	**'06 M.Y. in brackets**
3	5V V. Ref.	55 (M4)	28 Way (Left)	

Purge Canister Closure Valve

Connector Pins	*Description*	*ECU Pin*	*ECU Connector*	
A	Battery Voltage	-	-	
B	ECU ground	9 (H2)	52 Way (Left)	**'06 M.Y. in brackets**

Purge Solenoid

Connector Pins	*Description*	*ECU Pin*	*ECU Connector*	
A	Battery Voltage	-	-	
B	ECU ground	38 (F4)	52 Way (Right)	**'06 M.Y. in brackets**

Enable Criteria:
- Altitude < 8000 ft (2438 m), Baro > 700 mbar
- Coolant > 45°C (113°F)
- Air temp < 80°C (176°F)
- Fuel level between 8 – 35 litres (2.1 – 9.24 US gallons)
- Vehicle must be stationary
- Closed loop fuelling control enabled
- Closed loop idle speed control enabled
- Ignition on

Disable Criteria:

P0171, P0172	– Fuel trim too rich or lean soft code
P0441, P0444, P0445	– Purge faults
P0446, P0447, P0448	– Canister closure faults
P0451, P0452, P0453	– Tank Pressure sensor faults
P0461, P0462, P0463	– Fuel level sensor faults
P0500	– Vehicle speed faults

Malfunction Criteria

P0441
This code can be caused by the purge value being either stuck closed or open.

sn_emp_cyclone.indd 29 03/03/2006 11:03:38
Downloaded from www.Manualslib.com manuals search engine

Purge valve stuck open
A purge valve that is unable to seal correctly will result in a tank evacuation during the sealing phase of the leak check sequence. In this phase, a pressure rise would normally be expected but when the purge valve is not sealing this causes depression in the tank. When the pressure is below -1.7mbar a purge valve fault is detected.

Purge valve stuck closed
A purge valve that is unable to open will not be able to achieve the required depression during the evacuation phase. A positive pressure rise during the leak check evacuation phase will be detected. Additional purge checks will set a purge valve fault code.

Monitor: Until leak check is completed

P0442
This code is set during the evaporative leak check process if the system calculates the measure of leak is above a specified value (determined by a table related to fuel level) after the 6.3 second timer has expired.

Monitor: Until leak check is completed

Potential failure modes:
- Leak from pipes or connections
- Leaking or damaged seal on filler cap / not fitted correctly
- Canister Closure valve not fully closing

P0455
This code is set if during the evaporative leak check the system fails to reach the evacuation target pressure. The system will perform additional purge checks to determine the nature of the problem. The additional purge checks will also run if the leak check fails to complete because the calculated vapour concentration is above the limit.

Additional Purge Check Enable Criteria:
- Vehicle not stationary
- Load between 30 – 35%
- Purge value >= 75%

Monitor: Until leak check is completed

Potential failure modes
- Fuel filler cap not fitted
- Leak from pipes or connections
- Canister Closure valve stuck open

P0456
This code is set during the evaporative leak check process if the system calculates the measure of leak is above a specified value (determined by a table related to fuel level) after the 19.7 second timer has expired.

Monitor: Until leak check is completed

Potential failure modes:
- Leak from pipes or connections
- Leaking or damaged seal on filler cap / not fitted correctly
- Canister Closure valve not fully closing

Notes:
- The MIL will be illuminated if the fault is present for 2 consecutive trips.
- Further information on the sensor may be found in Toyota 1ZZ-FE, 2ZZ-GE manual RM733E (B120T0327J) page FI-53

sn_emp_cyclone.indd 30 03/03/2006 11:03:38
Downloaded from www.Manualslib.com manuals search engine

Evaporative Emission Control – Purge, Open / Closed Circuit **P0444**
P0445
P0446
P0447
P0448
P0451
P0452
P0453

P0444 Evaporative Emission System Purge Control Valve Circuit Open
P0445 Evaporative Emission System Purge Control Valve Circuit Closed
P0446 Evaporative Emission System Vent Control Circuit
P0447 Evaporative Emission System Vent Control Circuit Open
P0448 Evaporative Emission System Vent Control Circuit Closed
P0451 Evaporative Emission System Pressure Sensor/Switch Range/Performance
P0452 Evaporative Emission System Pressure Sensor/Switch Low
P0453 Evaporative Emission System Pressure Sensor/Switch High

Description
When the engine is running the ECU continuously monitors the feedback signals from the evaporative emission components. The feedback signal should be low when the turned ON and high when turned Off. The following codes will be set if the above conditions are not met.

P0444, P0445, P0447, P0448, P0452, P0453

P0446
This code can be caused by the canister closure valve (CCV) being either stuck closed or open.

CCV stuck open:
A CCV is stuck open then there will be minimal tank depression when the leak test is performed. Addition check will be performed when the vehicle is being driven before the code is set.

CCV stuck closed:
Detection of a stuck closed CCV is implemented by detecting an excessively low tank pressure during normal purge. Detection of this fault will disable further purging
Additional checks for stuck CCV closed:
- Vehicle not stationary
- Load between 30 – 35%
- Purge Value >= 75%

Monitor: Until leak check is completed.

P0451
This code is set when the ECU detects abnormalities in the fuel tank vapour pressure sensor signal. The ECU analyses the filtered and unfiltered pressure signal at idle after a de-slosh period to determine if there is any difference, a big difference indicates as fault. The ECU also monitors the signal on gear changes to see if there is any pressure rise as a result of the fuel sloshing around.

Disable Criteria:
P0500 – Wheel speed sensor fault

Monitor: Until leak check is completed

Notes:
The MIL will be illuminated if the fault is present for 2 consecutive trips.

sn_emp_cyclone.indd 31 03/03/2006 11:03:38
Downloaded from www.Manualslib.com manuals search engine

Fuel Level Sensor **P0461**
P0462
P0463

P0461 Fuel Level Sensor “A” Circuit Range/Performance
P0462 Fuel Level Sensor “A” Circuit Low
P0463 Fuel Level Sensor “A” Circuit High

Description
When the engine is running the ECU continuously monitors the fuel level sensor feedback signals. The feedback signal should be low when turned ON and high when turned OFF. The following codes will be set if the above conditions are not meet.

Sensor connections		**'06 M.Y. in brackets**	
Sensor Connector	*Description*	*ECU Pin*	*ECU Connector*
1	Vapour pressure and fuel level ground	78 (L4)	28 Way (Left)
2	Fuel level sensor	76 (E3)	28 Way (Left)
3	Vapour pressure & fuel level V ref.	55 (M4)	28 Way (Left)

Enable Criteria:
- P0462 & P0463 – Condition not met as above
- P0461 – Checks for three conditions, stuck when full, stuck when empty or stuck midway. The ECU determines if the sensor is stuck by calculating the amount of fuel used during the test period with the engine conditions as listed below.
- RPM > 2800rpm
- Load > 40%
- Minimum Fuel level > 2 litres (0.5 US gallons)
- If the ECU calculates that no fuel has been used during these tests it indicates that the sensor is not working correctly. The ECU also monitors the filtered and unfiltered signal at idle after a 10 second de-slosh period and compares the differences. Gear changes cause the fuel to slosh around so the ECU monitors the signal to see if there is any pressure rise.

Disable Criteria:
P0500 – Wheel speed sensor fault

Notes:
The MIL will be illuminated if the fault is present for 2 consecutive trips.

sn_emp_cyclone.indd 32 03/03/2006 11:03:38
Downloaded from www.Manualslib.com manuals search engine

Engine Cooling Fan Control **P0480**
P0481

P0480 Fan 1 Control Circuit
P0481 Fan 2 Control Circuit

Component connections

Sensor Connector	*Description*	*ECU Pin*	*ECU Connector*	
2 (ACCM 2*)	Relay #1	67 (J2)	28 Way (Left)	**'06 M.Y. in brackets**
3 (ACCM 2*)	Relay #2	60 (J3)	28 Way (Left)	

*ACCM – A/C Control Module

Monitor: Continuous

Enable Criteria: Engine running

Disable Criteria: None

Potential failure modes:
- A/C Control Module failure
- ECU output circuit failure

Notes:
No MIL will be illuminated for this failure.

sn_emp_cyclone.indd 33 03/03/2006 11:03:39
Downloaded from www.Manualslib.com manuals search engine

Vehicle Speed Sensor **P0500**

P0500 Vehicle Speed Sensor “A”

Description
The ECU uses the left rear wheel speed sensor to determine vehicle speed. This output to the ECU is via the ABS module.

Sensor connections

ABS Control Unit	*Description*	*ECU Pin*	*ECU Connector*	
3	Wheel Speed 3 from ABS (LR)	77 (B4)	28 Way (Left)	**'06 M.Y. in brackets**

Sensor characteristics
Hall Effect sensor

Malfunction Criteria
- TPS < 0.8
- Engine speed > 1800rpm and < 5010rpm
- Baro > 756 mbar

Monitor: Continuous

Potential failure modes:
- Open or short in vehicle speed sensor circuit
- Build up of debris in the sensing plate on the wheel hub

Notes:
The MIL will be illuminated if the fault is present for 2 consecutive trips.

sn_emp_cyclone.indd 34 03/03/2006 11:03:39
Downloaded from www.Manualslib.com manuals search engine

Idle Speed Control **P0506**
P0507
P0508
P0509

P0506 Idle Air Control System RPM Lower Than Expected
P0507 Idle Air Control System RPM Higher Than Expected
P0508 Idle Air Control System Circuit Low (prior '06 M.Y.)
P0509 Idle Air Control System Circuit High (prior '06 M.Y.)

Description
Prior to '06 M.Y. the ECU controls the air entering the engine with an idle air control (IAC) valve. To increase the idle the ECU commands the IAC to open up. This allows more air to bypass the throttle blades. To decrease the idle speed the ECU commands the IAC to close up. This will reduce the amount of air bypassing the throttle body. The ECU performs low and high circuit checks when it is activating the component.
For '06 M.Y. onwards, the electronically controlled throttle needs no IAC, as the ECU commands the throttle valve itself to control idle speed.

Component connections (prior to '06 M.Y.)

Connector	*Description*	*ECU Pin*	*ECU Connector*
1	Idle air control value	35	52 Way
2	Battery Voltage	-	-
3	Ground	-	-

Malfunction Criteria
P0506 – This code is set if the engine fails to achieve the desired idle speed by more than 100 rpm.
P0507 – This code is set if the engine fails to achieve the desired idle speed by more than 200 rpm.
P0508 – This is set when the ECU does not get the expected feedback (prior to '06 M.Y.).
P0509 – This is set when the ECU does not get the expected feedback (prior to '06 M.Y.).

Enable Criteria:
- Engine at idle speed
- Battery Voltage between 10 – 16 V
- Idle speed learn limit ± 15%
- Timer expired 5 seconds

Monitor: Continuous

Potential failure modes:
- Throttle body sticking (not fully closing) (prior to '06 M.Y.)
- Connector / wiring corroded or loose connections (prior to '06 M.Y.)
- Throttle linkage / cable binding (prior to '06 M.Y.)
- Induction system air leak
- Excessive engine load from front end accessory drive system, e.g. water pump seizing

Notes:
The MIL will be illuminated if the fault is present for 2 consecutive trips.

sn_emp_cyclone.indd 35 03/03/2006 11:03:39
Downloaded from www.Manualslib.com manuals search engine

Battery Voltage **P0562**
P0563

P0562 System Voltage Low
P0563 System Voltage High

Monitor: Continuous

Enable Criteria:
- Engine running
- P0562 – Voltage Too Low < 10V
- P0563 – Voltage Too High > 16V

Disable Criteria: None

Potential failure modes:
- Alternator fault
- Battery fault

Notes:
The MIL will be illuminated if the fault is present for 2 consecutive trips.

sn_emp_cyclone.indd 36 03/03/2006 11:03:39
Downloaded from www.Manualslib.com manuals search engine

ECU Integrity **P0601**
P0606

P0601 Checksum
P0606 Watchdog

Description
These codes are used by the ECU to check the integrity of the software and calibration data. P0601 checks that on power up the checksum for calibration data is the same as checksum saved on power down. P0606 checks the watchdog timer after a defined period to see if it has reset. If the watchdog timer has not reset then the code has entered an unplanned loop or condition stopping it resetting the timer.

Monitor
- P0601 at ECU power up
- P0606 continuously while the engine running

Notes:
The MIL will be illuminated if the fault is present for 2 consecutive trips.

sn_emp_cyclone.indd 37 03/03/2006 11:03:39
Downloaded from www.Manualslib.com manuals search engine

Fuel Pump **P0627**

P0627 Fuel Pump Control Circuit /Open

Description
The fuel system is of the non-return type. The pump is incorporated into the fuel tank module which also contains the level sensor, regulator and vapour pressure sensor.

Component connections

Connector	*Description*	*ECU Pin*	*ECU Connector*	
4 (RMC 1 – MFRU*)	Inertia Switch (Pin 1)	-	-	
2 (RMC 2 – MFRU*)	Fuel Pump Relay	68 (J4)	28 Way (Left)	**'06 M.Y. in brackets**

*MFRU – Multi Function Relay Unit

Monitor: Continuous

Enable Criteria: Ignition on

Disable Criteria: None

Potential failure modes:
- Pump open circuit or short to ground
- Multi Function Relay Unit failure
- Pump failure
- ECU output circuit failure

Notes:
No MIL will be illuminated for this failure.

sn_emp_cyclone.indd 38 03/03/2006 11:03:39
Downloaded from www.Manualslib.com manuals search engine

Air Conditioning System **P0646**
P0647

P0646 A/C Clutch Relay Control Circuit Low
P0647 A/C Clutch Relay Control Circuit High

Component connections

Connector	*Description*	*ECU Pin*	*ECU Connector*	
5 (ACCM 2*)	AC Clutch Relay	53 (J1)	28 Way (Left)	**'06 M.Y. in brackets**

*ACCM – A/C Control Module

Monitor: Continuous

Enable Criteria: Engine running

Disable Criteria: None

Potential failure modes:
- A/C compressor clutch open circuit or short to ground
- A/C Control Module failure
- A/C compressor clutch failure
- ECU output circuit failure

Notes:
No MIL will be illuminated for this failure.

sn_emp_cyclone.indd 39 03/03/2006 11:03:39
Downloaded from www.Manualslib.com manuals search engine

Misfire **P1301**
P1302

P1301 Misfire level causing emissions increase
P1302 Misfire level causing catalyst system damage

Description
When the engine misfire reaches a high enough percentage the engine emission output levels can exceed the allowed limits, this will produce the fault code P1301. If the misfire percentage is high enough and there is a possibility that the catalyst may be damaged then code P1302 will be set.

See misfire faults P0300, P0301, P0302, P0303, P0304

Notes:
- The MIL will flash for a 1302 fault code
- The MIL will be illuminated if the 1301 fault is present for 2 consecutive trips.

sn_emp_cyclone.indd 40 03/03/2006 11:03:40
Downloaded from www.Manualslib.com manuals search engine

Coolant Recirculation Pump **P2602**
P2603

P2602 Coolant Pump Control Circuit Low
P2603 Coolant Pump Control Circuit High

Description
During a hot shutdown of the engine, the recirculation pump can continue to pump coolant around the engine. The recirculation pump will run after the engine has been turned off if the enable criteria are matched.

Component connections

Connector	*Description*	*ECU Pin*	*ECU Connector*	
2 (RMC 1 – MFRU*)	Fuse box	-	-	
5 (RMC 2 – MFRU*)	Recirc Pump Relay	69 (K1)	28 Way (Left)	**'06 M.Y. in brackets**

*MFRU – Multi Function Relay Unit

Monitor: Continuous

Enable Criteria:
P2602 - engine not running
P2603 - engine running

Disable Criteria: None

Potential failure modes:
- Pump open circuit or short to ground
- Multi Function Relay Unit failure
- Pump failure
- ECU output circuit failure

Notes:
No MIL will be illuminated for this failure.

sn_emp_cyclone.indd 41 03/03/2006 11:03:40
Downloaded from www.Manualslib.com manuals search engine

Camshaft Lift Control (VVL) **P2646**
P2647
P2648
P2649

P2646 A Rocker Arm Actuator System Performance or Stuck Off
P2647 A Rocker Arm Actuator System Stuck On
P2648 A Rocker Arm Actuator Control Circuit Low
P2649 A Rocker Arm Actuator Control Circuit High

Description
Intake and exhaust camshaft lift can be changed by means of the Variable Valve Lift (VVL) system, which varies the amount of maximum lift of the intake and exhaust valves. The mechanism uses dual element rocker arms to provide cam changeover, with both the intake and exhaust camshafts having high and low speed cam profiles. The system is ECU controlled, using an oil control solenoid which, when activated, uses hydraulic pressure to push a rocker arm locking pin into engagement to activate the high-speed cam profile. A signal from the VVL oil pressure switch provides feedback to the ECU that VVL activation has taken place. VVL activation* to the high lift camshaft profile occurs at 6200rpm when engine speed is increasing, and returns to the low lift camshaft profile at 6000rpm when the engine speed is decreasing.
*Coolant temperature must be >60°C (140°F).

Component connections

Connector	*Description*	*ECU Pin*	*ECU Connector*
1	Battery Voltage	-	-
2	VVL Oil Control Valve	12 (H3)	52 Way (Right)
-	VVL Oil Pressure Switch	21 (B2)	52 Way (Right)

'06 M.Y. in brackets

Monitor: Continuous

Enable Criteria: Engine running

Disable Criteria: None

Potential failure modes:
- VVL valve stuck open / closed
- VVL valve open circuit
- VVL valve short to ground
- Rocker arm failure
- Rocker shaft location pin failure
- ECU output circuit failure

Notes:
The MIL will be illuminated if the fault is present for 2 consecutive trips.

sn_emp_cyclone.indd 42 03/03/2006 11:03:40
Downloaded from www.Manualslib.com manuals search engine

EMP.2 - 'LOTUS SCAN' DIAGNOSTIC TOOL

In order to provide for communication with the engine management system electronic control module, a hand held electronic scanner 'Lotus Scan' (part number T000T1418F), may be plugged into a special 16 terminal harness connector socket, known as a Data Link Connector (DLC), located at the front of the passenger footwell. Note that this tool may also be used on previous Elise models (excluding Exige, 340R and 160 models).

Amongst the operations available using the 'Lotus Scan' tool are:

- Reading of Trouble Codes
- Clearing of Trouble Codes
- Reading live data
- Test operation of individual solenoids
- Running engine history report
- Reprogramming ECU

Operating instructions are provided with the tool.

Important Note

The power supply transformer is used for overnight charging of the printer, and also for powering the Scan tool during software downloading from a PC (personal computer). For the software download operation, the Scan tool requires a power supply from the mains via the transformer and an inverter. Two types of inverter have been used; early kits used an adaptor lead to plug into the bottom end of the Scanner tool. Later kits use an adaptor plug fitting into the top end of the scanner.

When charging the printer, it is most important that the inverter is NOT used, or damage to the transformer may be caused. Incorrect connection is possible only with the early type adaptor lead, with which extra care should be exercised.

1. Reading data from vehicle

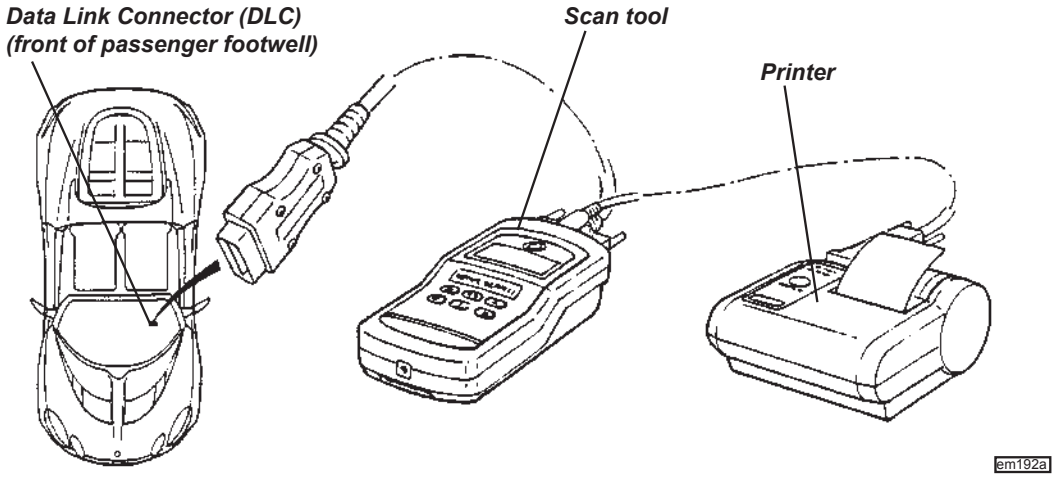

sn_emp_cyclone.indd 43 03/03/2006 11:03:40
Downloaded from www.Manualslib.com manuals search engine

2. Downloading software from P.C.

With early type adaptor lead

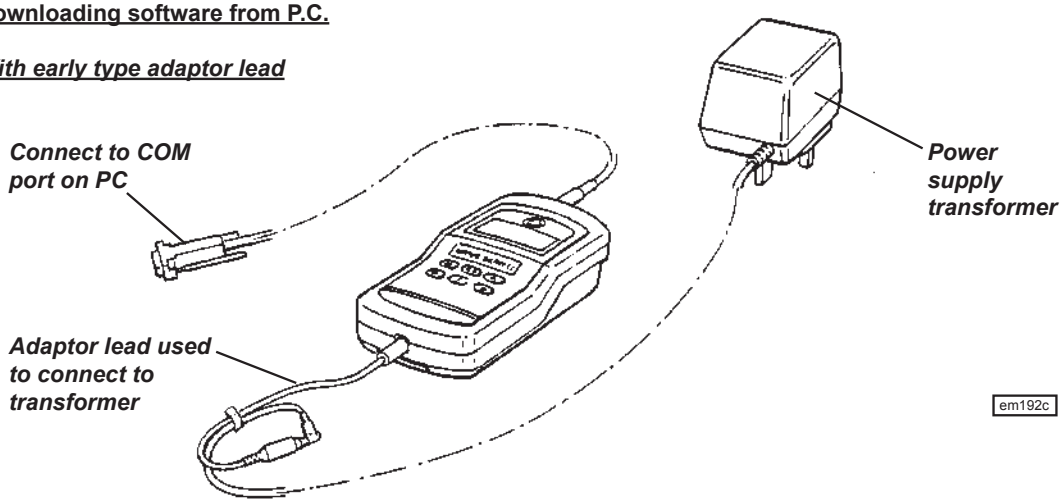

With later type adaptor

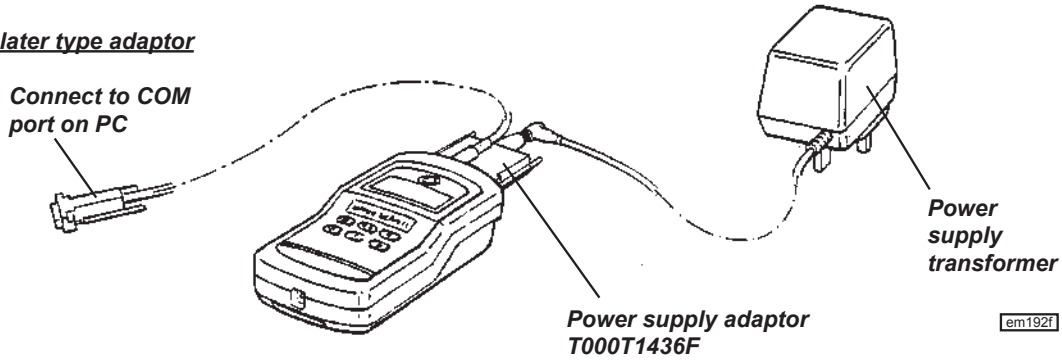

3. Charging printer

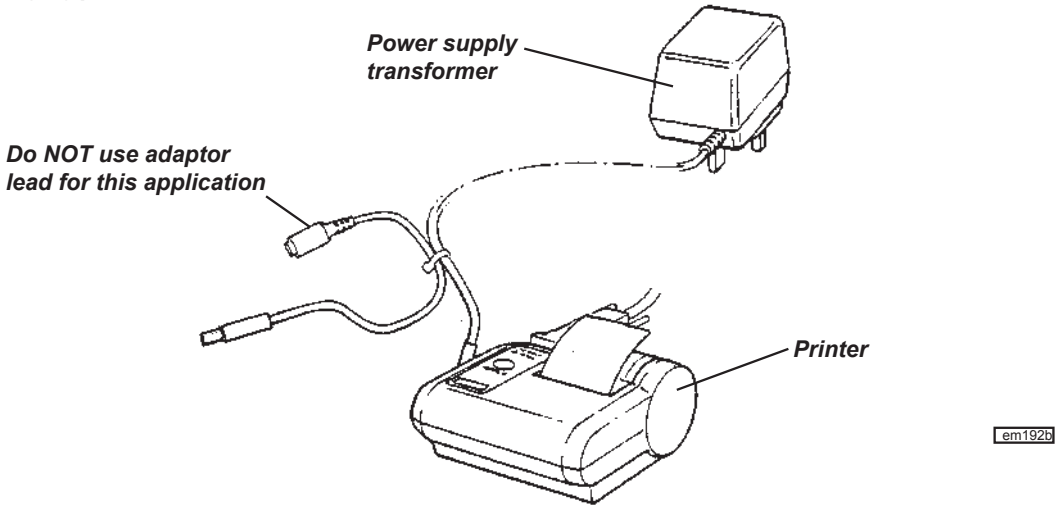

sn_emp_cyclone.indd 44 03/03/2006 11:03:41
Downloaded from www.Manualslib.com manuals search engine

EMP.3 - ENGINE MANAGEMENT COMPONENT LOCATION

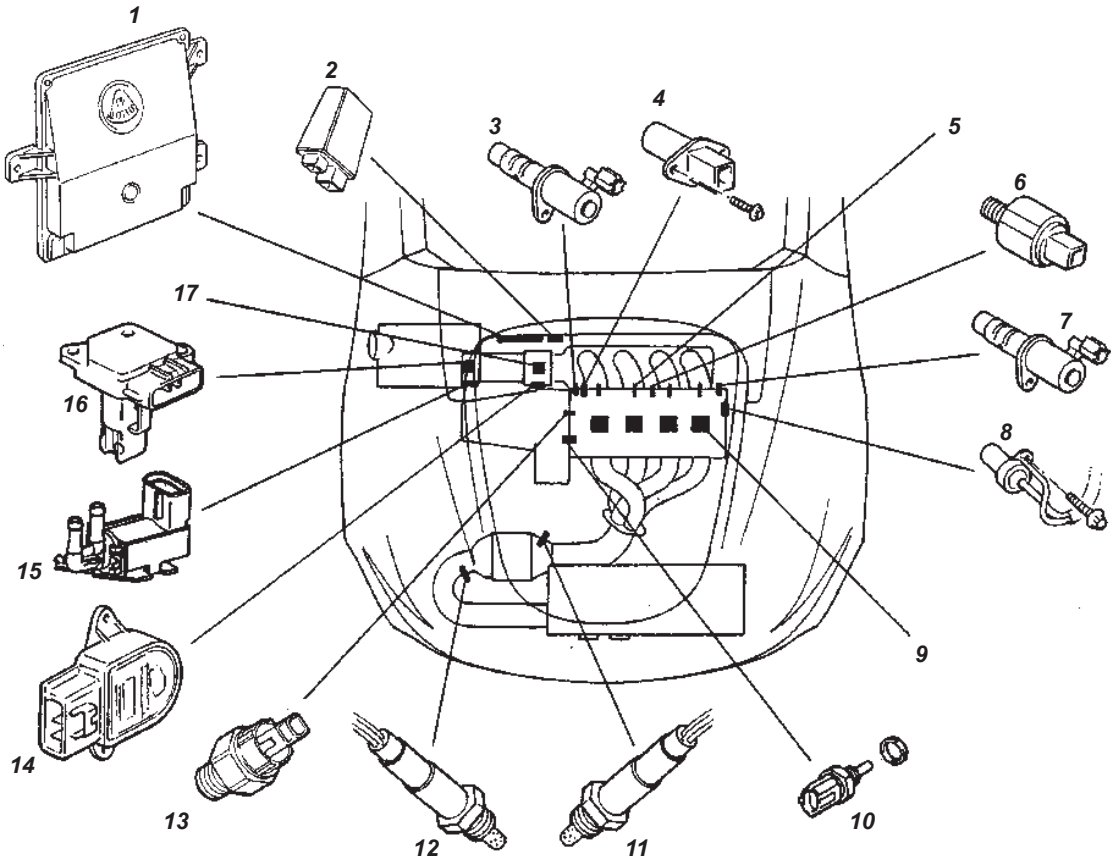

Key to engine management component location drawing

1. Electronic Control Unit (ECU).
2. Multi-function relay unit.
3. Oil control valve for variable valve lift.
4. Camshaft position sensor.
5. Fuel injector.
6. Knock sensor.
7. Oil control valve for variable valve timing.
8. Crankshaft position sensor.
9. Plug top coil.
10. Coolant temperature sensor.
11. Pre-catalyst oxygen sensor.
12. Post-catalyst oxygen sensor.
13. Oil pressure switch.
14. Throttle position sensor.
15. Vacuum solenoid for intake flap valve.
16. Mass airflow sensor.
17. Idle Air Control (IAC) valve - prior '06 M.Y.

For component replacement procedures, refer to manual B120T0327J.

sn_emp_cyclone.indd 45 03/03/2006 11:03:41
Downloaded from www.Manualslib.com manuals search engine

EMP.4 - MECHANICAL THROTTLE SETTING PROCEDURE (Prior '06 M.Y.)

To avoid throttle cable strain, and ensure correct idle control and pedal operation, the following adjustments must be maintained. If the pedal downstop is incorrectly set, overloading of the throttle body cable quadrant can occur, resulting in quadrant distortion, closed throttle position error and engine stalling:

1. Check the throttle body cable quadrant for distortion and mis-alignment. If necessary, repair or replace the quadrant.

2. Check that there is 2 - 3 mm free play at the throttle pedal, adjusting at the throttle body cable abutment bracket if necessary.

3. If an idle control problem has been reported, reset the closed throttle stop screw on the throttle body: With ignition off, use a hexagonal key in the bottom end of the throttle stop screw to allow the throttle butterfly valve to fully close, and introduce clearance between the screw and quadrant stop bracket. Screw upwards until contact is just made, and then a further ½ turn upwards. Secure with the locknut. Recheck cable adjustment as above.

4. Adjust the throttle pedal downstop such that vigorous full depression of the pedal achieves full opening of the throttle butterfly without allowing the cable or mechanism to be strained.

5. If the throttle stop screw was adjusted, allow the engine to idle for 15 minutes to relearn settings.

6. An alternative pedal position which may be preferred for 'heel and toeing', may be achieved by replacing the rubber upstop buffer with an M5x15 hex. head setscrew, with three flat washers beneath the head for a total thickness of around 7mm. The cable must then be re-adjusted at the engine abutment as above. The foopad downstop bolt should then be replaced by an M8x20 setscrew and reset as above.

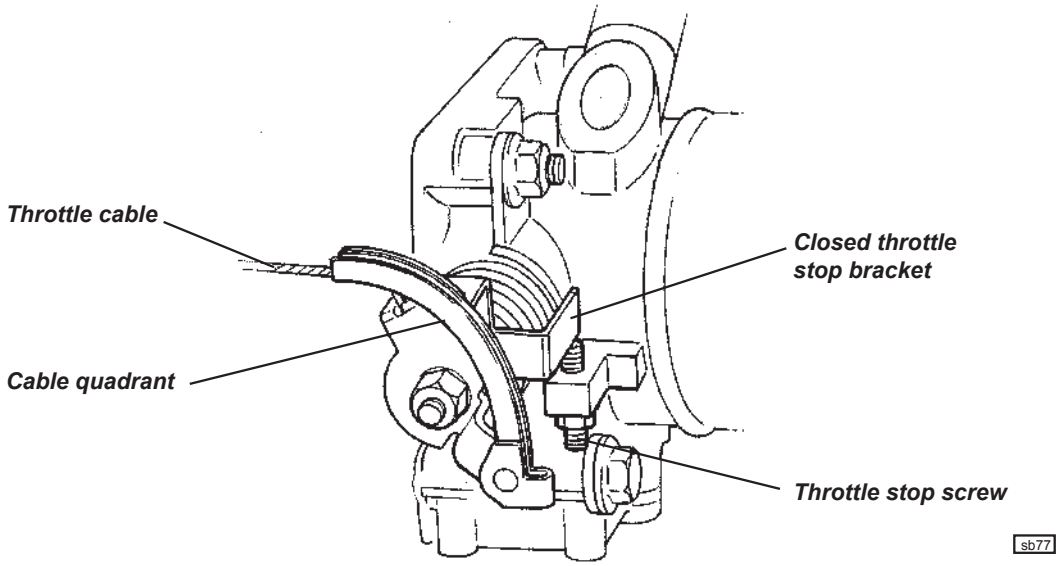

sn_emp_cyclone.indd 46 03/03/2006 11:03:41
Downloaded from www.Manualslib.com manuals search engine

EMP.5 - 2006 MODEL YEAR ELECTRONIC THROTTLE CONTROL (ETC)

For '06 model year, the 2ZZ-GE engine is equipped with an electronic 'drive by wire' throttle in order to meet Low Emissions Vehicle 2 emissions standards as dictated by California Air Resources Board. This is achieved by allowing fuel pre-scheduling and consistency of load demand.

The mechanical throttle control cable is replaced by a pedal actuated potentiometer unit which feeds pedal movement and position information to the engine management ECU. The ECU compares this demand information with existing engine throttle position data, and outputs a suitable command signal to the DC stepper motor which operates the throttle valve. For optimum safety, two output curves are produced by the pedal unit and are fed into two processors contained within the ECU. Similarly, two streams of engine throttle valve positional information are fed back into these processors, which are then compared by the ECU software. Any discrepancies are analysed and appropriate safety oriented commands outputed to the throttle valve which may be limited to a maximum 15% opening, or to a 7% mechanically sprung setting for 'limp home', or in extreme cases, the injectors may be shut off.

Note that no IAC valve is required, as the idle air control function is incorporated into the electronic throttle system.

ECU Communication

2006 model year cars with ETC have the VIN included in the ECU memory, without which the MIL will be illuminated, and a fault code stored. The Lotus Scan tool requires an updated operating programme which includes VIN download facility and is available on CD under part number T000T1466/2. This programme must be downloaded on to a PC before being transferred to the Scan tool. The ECU progamme is also specific to ETC, with an i.d. of A120E0030H (non USA) or A121E0010H (USA) .

sn_emp_cyclone.indd 47 03/03/2006 11:03:41
Downloaded from www.Manualslib.com manuals search engine

EMP.6 - DIAGNOSTIC CODE SUPPLEMENT - '06 M.Y.

New fault codes for '06 M.Y. cars with electronic throttle control are as follows:

DTC	Fault Description	Page
P0016	Crankshaft Position – Camshaft Position Correlation Error	49
(P0121/P0122/P0123	Throttle Position Sensor 'A' - see page 12)	
P0222	Throttle Position Sensor 'B' Circuit Low	49
P0223	Throttle Position Sensor 'B' Circuit High	49
P0630	VIN Not Programmed or Incompatible – ECU	50
P0638	Throttle Actuator Control Range/Performance	50
P2100	Throttle Actuator Control Motor Circuit/Open	51
P2102	Throttle Actuator Control Motor Circuit/Low	51
P2103	Throttle Actuator Control Motor Circuit/High	51
P2104	Throttle Actuator Control System – Forced Idle	51
P2105	Throttle Actuator Control System – Forced Engine Shutdown	52
P2106	Throttle Actuator Control System – Forced Limited Power	52
P2107	Throttle Actuator Control Module Processor	52
P2108	Throttle Actuator Control Module Performance	53
P2122	Pedal Position Sensor 'D' Circuit Low	53
P2123	Pedal Position Sensor 'D' Circuit High	53
P2127	Pedal Position Sensor 'E' Circuit Low	54
P2128	Pedal Position Sensor 'E' Circuit High	54
P2135	Throttle Position Sensor 'A'/'B' Voltage Correlation	54
P2138	Pedal Position Sensor 'D'/'E' Voltage Correlation	55
P2173	Throttle Actuator Control System – High Airflow Detected	55

sn_emp_cyclone.indd 48 03/03/2006 11:03:42
Downloaded from www.Manualslib.com manuals search engine

Crankshaft Position–Camshaft Position Correlation Error **P0016**

Description
The crankshaft position sensor is used to identify engine position and speed via a pole wheel mounted on the front end of the crankshaft. The camshaft position sensor is used to determine camshaft position from a three vane reluctor on the rear end of the inlet camshaft. The Variable Valve Timing system (VVT) on the inlet camshaft can vary the timing by up to 25°, with fault codes P0011 and P0012 allocated to errors with the variable timing. Fault code P0016 indicates a mechanical timing error such as incorrectly set, or 'jumped' cam timing.

Enable Criteria:
Engine running (for up to 4 seconds)

Disable Criteria: None

Potential failure modes:
Crankshaft/Camshaft alignment

Throttle Position Sensor 'B' Circuit Low **P0222**

Description
Two potentiometers are built into the throttle valve actuator unit in order to provide a throttle position signal to the ECU. Note that the sensors operate on 5 volts.

Enable Criteria: None

Disable Criteria: None

Potential failure modes:
Signal short circuit (< 0.283 V)
Reference voltage open circuit
Reference voltage short to ground
Sensor failure

Notes: A maximum throttle opening of 15% may be imposed due to this single code. In the case of multiple codes, a mechanically sprung 7% opening may be applied.

Throttle Position Sensor 'B' Circuit High **P0223**

Enable Criteria: None

Disable Criteria: None

Potential failure modes:
Signal open circuit (> 4.487 V)
Reference voltage open circuit
Reference voltage short to ground
Sensor failure

Notes: A maximum throttle opening of 15% may be imposed due to this single code. In the case of multiple codes, a mechanically sprung 7% opening may be applied.

sn_emp_cyclone.indd 49 03/03/2006 11:03:42
Downloaded from www.Manualslib.com manuals search engine

VIN Not Programmed or Incompatible – ECU/PCM **P0630**

Description
The ECM programming includes the Vehicle Identification Number (VIN). This operation is performed using the Lotus Scan tool.

Enable Criteria:
Engine running (for up to 4 seconds)

Disable Criteria: None

Potential failure modes:
VIN not programmed
Incompatible VIN programmed

Throttle Actuator Control Range/Performance **P0638**

Description
The single throttle butterfly valve, mounted at the inlet to the intake plenum, is operated by a stepper motor under the command of the engine ECU. The valve moves through a range of nearly 90° and should display 100% at full throttle and around 2% at idle.

Monitor: Continuous

Enable Criteria:
Engine running

Disable Criteria:
Electronic throttle fault(s) present

Potential failure modes:
Blocked throttle body
Damage to throttle actuator

Notes: A mechanically sprung 7% throttle opening may be imposed.

sn_emp_cyclone.indd 50 03/03/2006 11:03:42
Downloaded from www.Manualslib.com manuals search engine

Throttle Actuator Control Motor Circuit/Open **P2100**

Description
The throttle actuator stepper motor operates on 12 volts.

Monitor: Continuous

Enable Criteria: None

Disable Criteria: None

Potential failure modes:
#Throttle actuator control motor open circuit

Throttle Actuator Control Motor Circuit/Low **P2102**

Monitor: Continuous

Enable Criteria: None

Disable Criteria: None

Potential failure modes:
Throttle actuator control motor short to ground

Throttle Actuator Control Motor Circuit/High **P2103**

Monitor: Continuous

Enable Criteria: None

Disable Criteria: None

Potential failure modes:
Throttle actuator control motor short to supply voltage

Throttle Actuator Control System – Forced Idle **P2104**

Description
If a problem is detected which could result in faster engine speed than commanded by the pedal, the actuator is switched out, allowing the throttle valve to default to a 6% mechanically sprung setting. This provides a fast idle speed which may be used to effect a 'limp home' mechanism.

Monitor: Continuous

Enable Criteria: Engine running

Disable Criteria: None

Potential failure modes:
Electronic throttle fault

Note: This code indicates action taken by the ECU, and will always be accompanied by another code which has caused this action.

sn_emp_cyclone.indd 51 03/03/2006 11:03:42
Downloaded from www.Manualslib.com manuals search engine

Throttle Actuator Control System – Forced Engine Shutdown **P2105**

Description
If a problem is detected which could result in engine speed runaway, or if sufficient control of engine speed is lost, the ECU switches off the fuel injectors in order to stop the engine.

Monitor: Continuous

Enable Criteria: Engine running

Disable Criteria: None

Potential failure modes:
Electronic throttle fault

Note: This code indicates action taken by the ECU, and will always be accompanied by another code which has caused this action.

Throttle Actuator Control System – Forced Limited Power **P2106**

Description
If a problem is detected which could result in engine speed control difficulties, the ECU will limit throttle opening to a maximum of 15%.

Monitor: Continuous

Enable Criteria: Engine running

Disable Criteria: None

Potential failure modes:
Electronic throttle fault

Note: This code indicates action taken by the ECU, and will always be accompanied by another code which has caused this action.

Throttle Actuator Control Module Processor **P2107**

Description
The ECU contains two processors dedicated to the throttle pedal and throttle valve potentiometers.

Monitor: Continuous

Enable Criteria: Engine running

Disable Criteria: None

Potential failure modes:
ECU internal fault
Incorrect ECU programming

sn_emp_cyclone.indd 52 03/03/2006 11:03:42
Downloaded from www.Manualslib.com manuals search engine

Throttle Actuator Control Module Performance **P2108**

Monitor: Continuous

Enable Criteria: Engine running

Disable Criteria: None

Potential failure modes:
ECU internal failure
Short circuit to throttle actuator

Pedal Position Sensor 'D' Circuit Low **P2122**

Description
Two potentiometers are built into the throttle pedal unit in order to provide a throttle demand signal to the ECU. Note that the potentiometers operate on 5 volts.

Enable Criteria: None

Disable Criteria: None

Potential failure modes:
Signal short circuit (< 0.283 V)
Reference voltage open circuit
Reference voltage short to ground
Sensor failure

Notes: A maximum throttle opening of 15% may be imposed due to this single code. In the case of multiple codes, a mechanically sprung 7% opening may be applied.

Pedal Position Sensor 'D' Circuit High **P2123**

Enable Criteria: None

Disable Criteria: None

Potential failure modes:
Signal open circuit (> 4.487 V)
Reference voltage open circuit
Reference voltage short to ground
Sensor failure

Notes: A maximum throttle opening of 15% may be imposed due to this single code. In the case of multiple codes, a mechanically sprung 7% opening may be applied.

sn_emp_cyclone.indd 53 03/03/2006 11:03:42
Downloaded from www.Manualslib.com manuals search engine

Pedal Position Sensor 'E' Circuit Low **P2127**

Description
Two potentiometers are built into the throttle pedal unit in order to provide a throttle demand signal to the ECU. Note that the potentiometers operate on 5 volts.

Enable Criteria: None

Disable Criteria: None

Potential failure modes:
Signal short circuit (< 0.283 V)
Reference voltage open circuit
Reference voltage short to ground
Sensor failure

Notes: A maximum throttle opening of 15% may be imposed due to this single code. In the case of multiple codes, a mechanically sprung 7% opening may be applied.

Pedal Position Sensor 'E' Circuit High **P2128**

Enable Criteria: None

Disable Criteria: None

Potential failure modes:
Signal open circuit (> 4.487 V)
Reference voltage open circuit
Reference voltage short to ground
Sensor failure

Notes: A maximum throttle opening of 15% may be imposed due to this single code. In the case of multiple codes, a mechanically sprung 7% opening may be applied.

Throttle Position Sensor 'A'/'B' Voltage Correlation **P2135**

Description
Two potentiometers are built into the throttle actuator unit in order to provide a throttle position signal to the ECU. Two processors within the ECU compare the two output signals, which should match within a defined tolerance. Note that the potentiometers operate on 5 volts.

Enable Criteria: None

Disable Criteria: Throttle position greater than 60%

Potential failure modes:
TPS1 reading incorrectly
TPS2 reading incorrectly

Notes: A maximum throttle opening of 15% may be imposed.

sn_emp_cyclone.indd 54 03/03/2006 11:03:42
Downloaded from www.Manualslib.com manuals search engine

Pedal Position Sensor/Switch 'D'/'E' Voltage Correlation **P2138**

Description
Two potentiometers are built into the throttle pedal unit in order to provide a throttle demand signal to the ECU. Two processors within the ECU compare the two output signals, which should match within a defined tolerance. Note that the potentiometers operate on 5 volts.

Enable Criteria: None

Disable Criteria: None

Potential failure modes:
PPS1 reading incorrectly
PPS2 reading incorrectly

Notes: A maximum throttle opening of 15% may be imposed.

Throttle Actuator Control System – High Airflow Detected **P2173**

Description
The mass air flow is compared with the throttle position to determine whether an incorrect correlation exists.

Enable Criteria: None

Disable Criteria: MAF fault(s) present

Potential failure modes:
Throttle plate damage
Air leak in intake system

Notes: A mechanically sprung 7% throttle opening may be imposed, or the injectors may be shut off to stop the engine.

sn_emp_cyclone.indd 55 03/03/2006 11:03:43
Downloaded from www.Manualslib.com manuals search engine

TRANSMISSION

SECTION FJ

	Sub-Section	Page
Introduction	FJ.1	2
Gearchange Mechanism	FJ.2	4
Lubrication	FJ.3	10
Driveshafts	FJ.4	11
Transmission Replacement	FJ.5	14
Transmission Overhaul & Special Tools	FJ.6	15

See also Toyota transmission repair manual D120T0327J

sn_fj_cyclone.indd 1 03/07/2006 15:06:28
Downloaded from www.Manualslib.com manuals search engine

FJ.1 - INTRODUCTION

The 5-speed Elise S transmission, and the 6-speed variant used on all other models, are both 'end on' type, mounted on the left hand end of the engine unit, and comprise the clutch housing, gearbox, final drive gears, and differential. Both units are supplied by Toyota, and are designated 'C56' and 'C64', (C = series; 5 or 6 = no. of gears; 6 or 4 = ratio set) with Toyota publication RM930E covering the description and overhaul of the 6-speed transmission (5-speed TBA). Two control cables are used to transmit the movement of the gearchange lever to the transmission selector housing, running along the centre of the cabin and beneath the power unit.

The two shaft gearbox is housed within a three part casing comprising clutch housing, main case and end cover, all being alloy castings.

C56 Shown

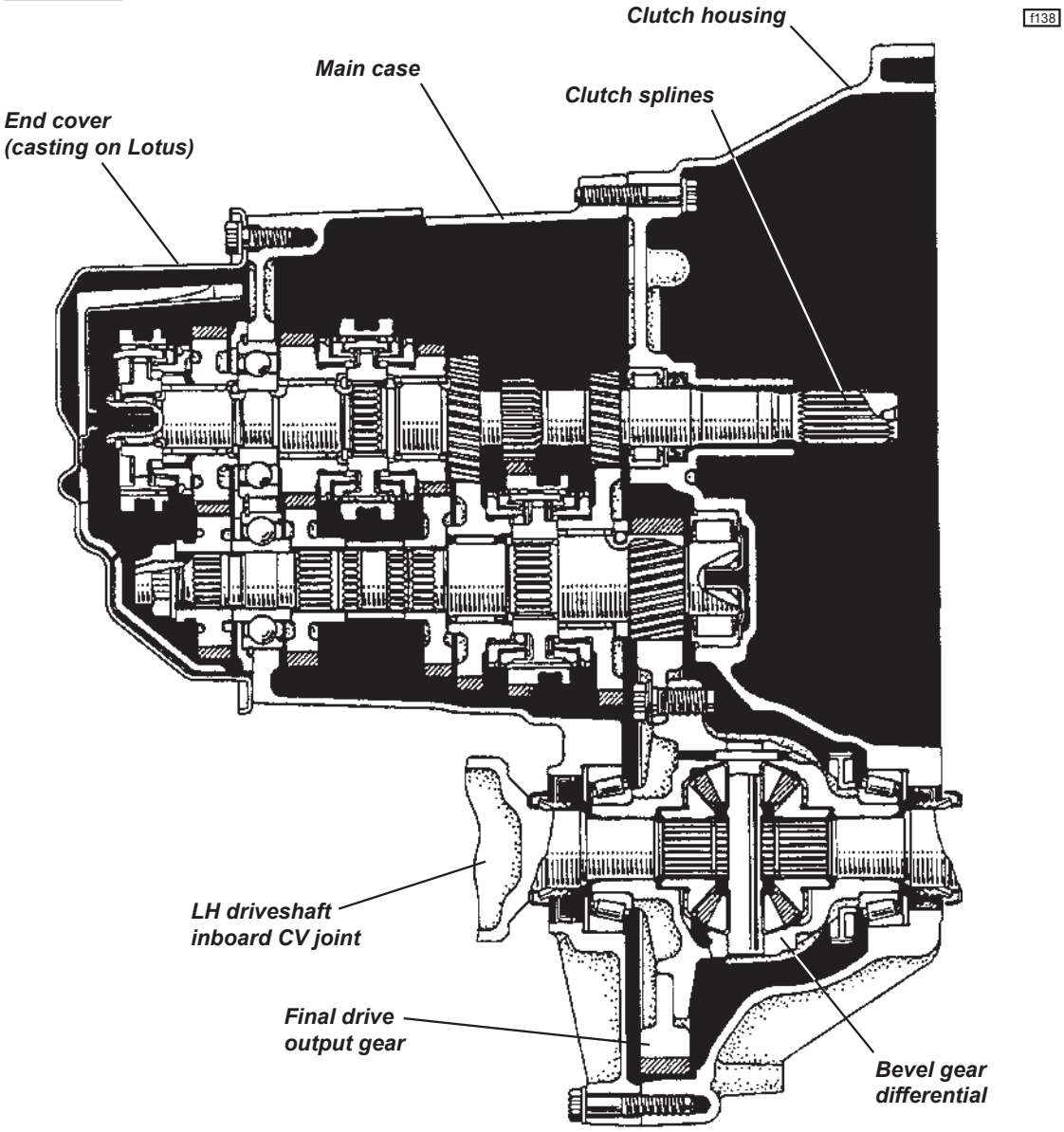

sn_fj_cyclone.indd 2 03/07/2006 15:06:28
Downloaded from www.Manualslib.com manuals search engine

The clutch housing bolts to the back of the engine block and provides a dry chamber for the clutch mechanism, and roller bearings for the gearbox input and output shafts. The taper roller bearing for the differential RH output shaft is also accommodated. The gearbox main case provides ball bearings for the two shafts, and houses gears 1 to 4 including the reverse gear pinion on its idler shaft. The end cover or casing houses 5th and 6th gears. On the 5-speed transmission, the 5th speed gears are overhung on the ends of the input and output shafts, but on the 6-speed, the alloy end cover contains ball bearings to support the ends of the two extended shafts, both of which are thus supported by a total of three bearings. The housing for the final drive and differential is shared between the clutch housing and main case, with taper roller bearings supporting the differential case.

6-Speed Gear Clusters

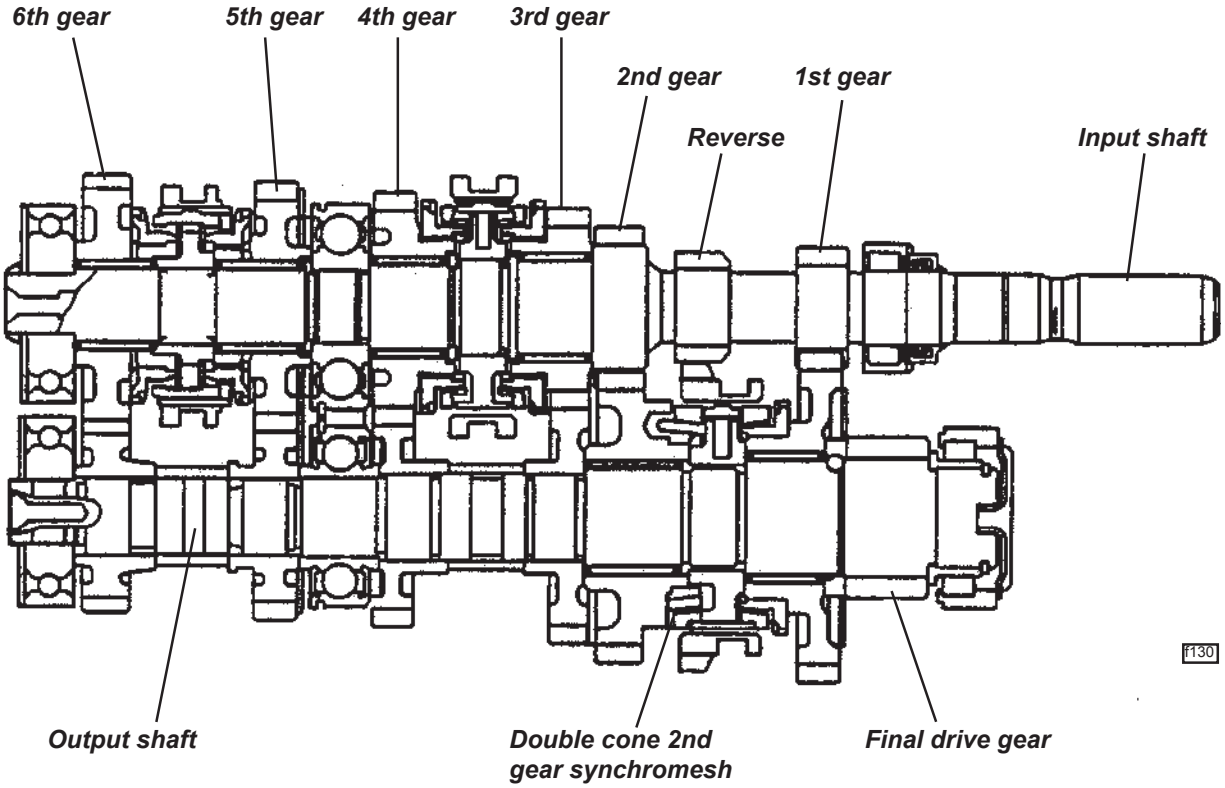

The input shaft includes integral drive pinions for 1st, 2nd and reverse gears, and carries the clutch driven plate, the 3rd/4th synchroniser and the 5th/6th synchroniser, with the latter housed in the end cover. The output shaft features an integral final drive gear, spline fixed 3rd/4th/5th/6th driven pinions, and carries the 1st/2nd gear synchroniser. All forward gears are constant mesh with inertia lock type synchromesh, with reverse gear attained by sliding a spur idler pinion into engagement with both a gear on the periphery of the 1st/2nd synchroniser and a drive gear integral with the input shaft. All gears, with the exception of reverse, use a helical tooth form for quiet running.

Sychromesh: For each gear ratio, one of the shafts has a fixed gear, and meshes with a freely revolving gear on the other shaft. To engage a particular gear, the freely revolving gear must be connected to its shaft via the sychro hub. As an example, third gear operates as follows: Under normal road driving, when the clutch is depressed as a precurser to a gear change, the input shaft with the third gear synchroniser are de-coupled from the engine, but will be turning under decaying inertia, clutch windage and oil drag, from the drive pinions (which in this condition are being driven by the output shaft). Third gear pinion on the input shaft is driven by the fixed gear on the output shaft, which itself is driven by the roadwheels. Before the outer sleeve of the synchroniser may be slid on its axial splines to engage with the spline ring integral with third speed input shaft gear, the speeds of the two parts must be commonised. To aid this process, a sychroniser/baulk ring is fitted between the two parts, being rotationally driven by the synchroniser, and equipped with a female conical surface to mate with a

Downloaded from www.Manualslib.com manuals search engine

male cone integral with the gear. Teeth on the outside of the synchro ring, over which the synchro sleeve must slide before engaging the third gear splines, perform a baulking function described below:

When the gear lever is operated, the outer sleeve of the synchroniser is pushed towards third gear, and pushes three spring detent plates which press the synchro ring onto the gear cone. As the input shaft train is turning faster than third gear, the synchro ring is dragged to one end of its rotational constraint slots in the synchroniser, in which position the internal spline teeth of the synchroniser sleeve are mis-aligned with the teeth on the outside of the synchro ring. When further pressure is applied via the gearlever, the detent plates are overidden, and the synchroniser sleeve splines are pressed against the ends of the sychro ring teeth, increasing the pressure on the conical surfaces. The bevelled ends of the sleeve splines and synchro ring teeth tend to turn the ring into alignment, but whilst a speed differential between the ring and the gear remains, the cone drag force (caused by gear inertia) is dominant and maintains spline mis-alignment. This is the 'baulk' function.

When the speed of the input train is synchronised to that of third gear, there ceases to be a force dragging the synchro ring to the end of its slots, such that the force at the bevelled ends of the splines is now dominant, allowing the synchro ring to move back in its slot to align the splines and for the synchroniser sleeve to be slid over the ring teeth towards the spline teeth on third gear. These teeth, whose position in relation to those on the synchro ring was entirely at random when speed synchronisation occurred, are unlikely to align, but are now freed to turn under the action of the spline end bevels, since once the synchroniser sleeve is slid over the sychro ring teeth, there is no longer any pressure applied to the cones. The sleeve completes engagement by sliding over the gear spline teeth to connect the synchroniser with the gear.

On 6-speed transmissions, in order to cater for the heavy demands made on the second gear synchroniser, and provide high durability, this gear is fitted with a double cone mechanism to increase the conical surface area within a small space.

The selector mechanism cross shaft uses Teflon bushes to minimise friction, and a mass damper to improve gearchange feel. A slotted interlock cage allows the selector finger to operate only one selector shaft at a time. In order to inhibit the unintended selection of reverse gear, a spring detent mechanism is arranged to act on the cross-shaft, in conjunction with, on 6-speed versions, a lift collar at the gearchange lever, and on 5-speeders, a mechanism allowing selection of reverse gear only on approach from the central neutral position.

Differential

Standard cars use a conventional 'open' two bevel gear differential contained in a housing bolted to the final drive output gear, and supported in two taper roller bearings. Optional on some models, in conjunction with electronic Lotus Traction Control (LTC), is a Torsen type limited slip differential (LSD) in an otherwise unchanged transmission housing (Character 3 of 7 digit code on bar code label: 'O' = open; 'L' = LSD). The LSD uses worm wheels to interconnect the two output shafts and uses the poor torque reversal efficiency of this type of gearing to ensure that both wheels are always supplied with driving torque.

Driveshafts

An output extension shaft supported in a ball bearing mounted on the cylinder block, is used on the right hand side to allow equal length drive shafts to be used. The driveshafts use Rzeppa type joints on their outboard ends and plunging joints at the inboard ends to accommodate the driveshaft length variation concomitant with suspension travel.

FJ.2 - GEARCHANGE MECHANISM

6-Speed

The gear lever is spring biased towards the 3rd/4th gear plane, and must be moved against light spring pressure to the left before selecting first or second gear, or against similar pressure to the right before selecting 5th or 6th speed.

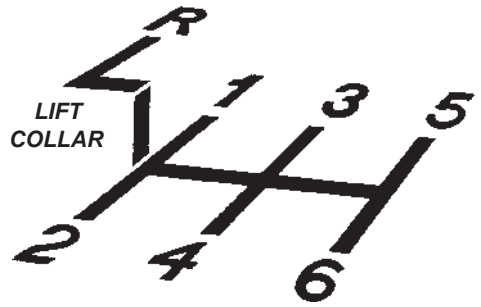

6-SPEED CHANGE PATTERN ohs15a

Engaging Reverse Gear:

With the vehicle at a **complete standstill**, pause for a moment with the clutch pedal fully depressed before moving the lever to the left, raising the lift collar beneath the knob, and then further to the left over a spring detent before finally pushing forwards to engage the gear.

Downloaded from www.Manualslib.com manuals search engine

5-Speed

The gear lever is spring biased towards the 3rd/4th gear plane, and must be moved against light spring pressure to the left before selecting first or second gear, or against similar pressure to the right before selecting 5th.

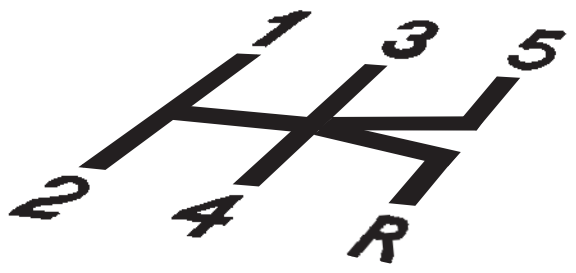

5-SPEED CHANGE PATTERN ohs15b

Engaging Reverse Gear:

With the vehicle at a **complete standstill**, pause for a moment with the clutch pedal fully depressed before moving the lever against spring pressure fully to the right, and then rearwards to engage the gear. Note that an inhibit mechanism requires that the lever approaches reverse gear only from the central neutral position. Direct access from 5th gear is blocked.

A two cable mechanism is used to connect the gearchange lever with the transmission, one cable ('shift') to transmit the fore/aft movement of the lever, and a second ('crossgate') cable for the sideways movement. The gearchange lever is pivotted at its base and operates the shift cable directly via a ball joint half way up the lever. The base of the lever has an extended ball pin on the right hand side which engages with a crossgate bellcrank lever, the other leg of which operates the crossgate cable. An inhibit mechanism prevents the gear lever being moved into the reverse gear plane unless a collar beneath the gear knob is lifted. Prior to May '07, the collar is connected by control cable to a pivotted stop arm sprung to an 'up' position. In this position, a stop pin on the crossgate bellcrank lever abuts against the end of the stop arm and prevents gearlever movement into the reverse gear plane. When the collar is lifted, the stop arm is pulled down against its spring, to clear the stop pin and allow reverse gate selection. From May '07, lifting the collar raises a boss at the base of the lever above a curved inhibitor block, allowing the lever full leftward movement.

Gearchange Cable Schematic (prior May '07)

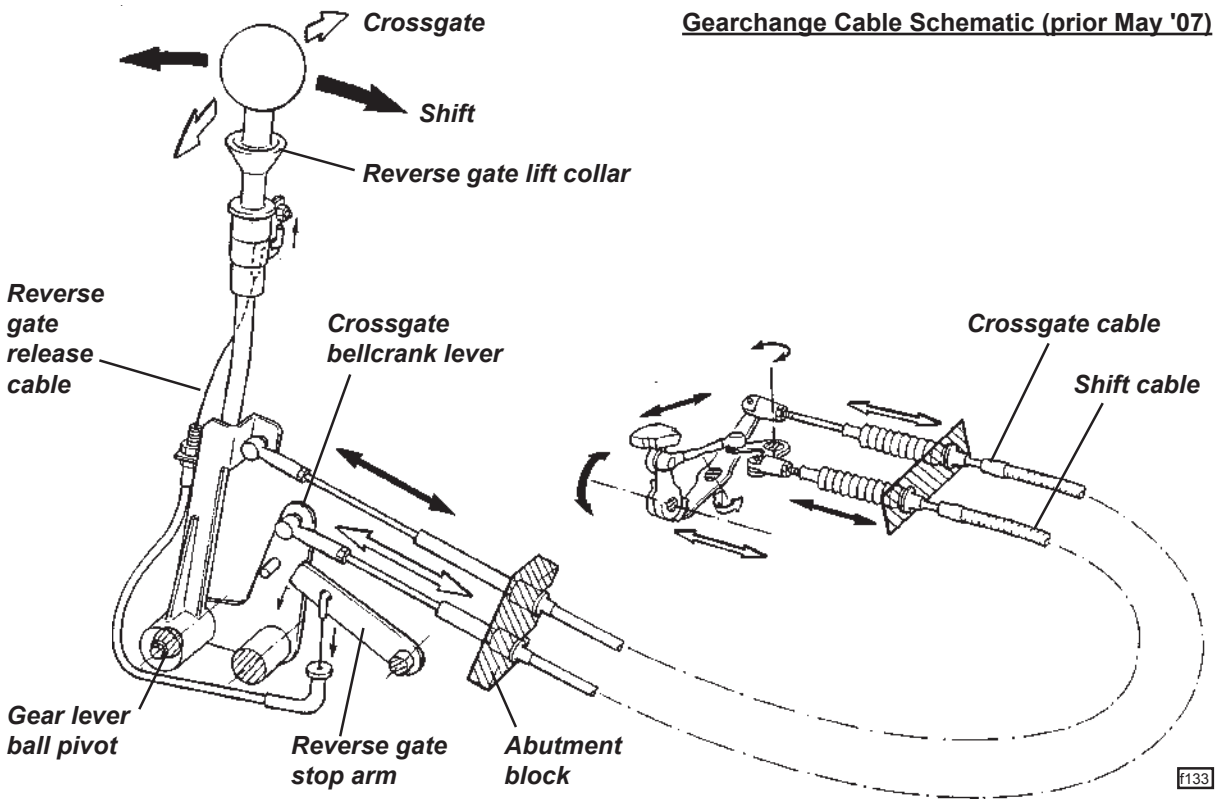

Downloaded from www.Manualslib.com manuals search engine

The front end of both inner cables are equipped with socket joints which may be clipped on and off the ball pins provided on the gearchange mechanism. The outer cables are retained by a forked plastic block bolted into the gearlever/handbrake mounting frame.

The gear cables are routed along the centre of the cabin floor, beneath the fuel tank bay, and loop under the engine to an abutment bracket on the top of the transmission housing. Both cables are retained in the abutment bracket by spring 'C' clips. The shift cable is fitted on the left, and uses a bellcrank lever and ball jointed link to connect with the transmission cross-shaft lever, in order to rotate the shaft. The cross-shaft lever incorporates an inertia weight to smooth the gearchange action and improve feel. The crossgate cable is fitted on the right and uses a centre pivotted lever arm to impart an axial motion to the transmission cross-shaft. The ends of both inner cables threaded into alloy eyes which are retained on the lever pins by 'R' clips.

Transmission External Levers

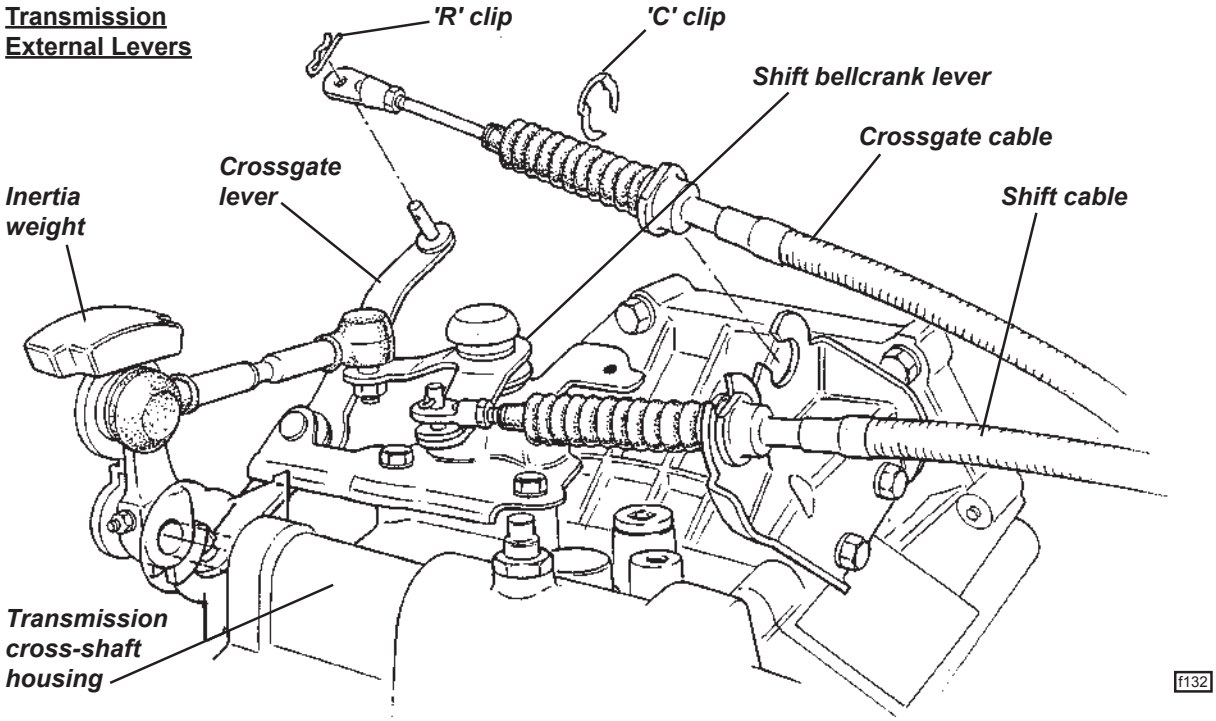

Gearchange Cable Adjustment

Under normal circumstances, no adjustment to the gear cables should be required. If a cable is replaced in service, it may be necessary to make minor adjustments via the threaded ball joint at the front of the cable in order to accommodate lever movement within the shroud aperture.

Gearchange Cable Replacement

For access to the gear cables, the gear lever shroud and parking brake lever trim must be removed: Unscrew the gear lever knob, remove the single screw each side of the shroud, and withdraw the shroud over the gear and parking brake levers. Remove the engine bay undertray.

At the front end of the cables, unclip the inner cable ball joint sockets from the ball pins on the mechanism levers. Release the outer cable plastic abutment block from the mounting frame. At the rear end of the cables, remove the 'R' clips retaining the inner cable eyes to the levers, and the 'C' clips securing the outer cables to the abutment bracket. Release the 'P' clips and cable ties as necessary to allow the cables to be withdrawn from the car, noting the routing of the cables past the parking brake lever and wiring harness.

Refit in reverse order to removal, paying particular attention to the routing through or alongside the parking brake lever mounting frame.

Downloaded from www.Manualslib.com manuals search engine

Gearchange Mechanism & Mounting Frame (prior May '07)

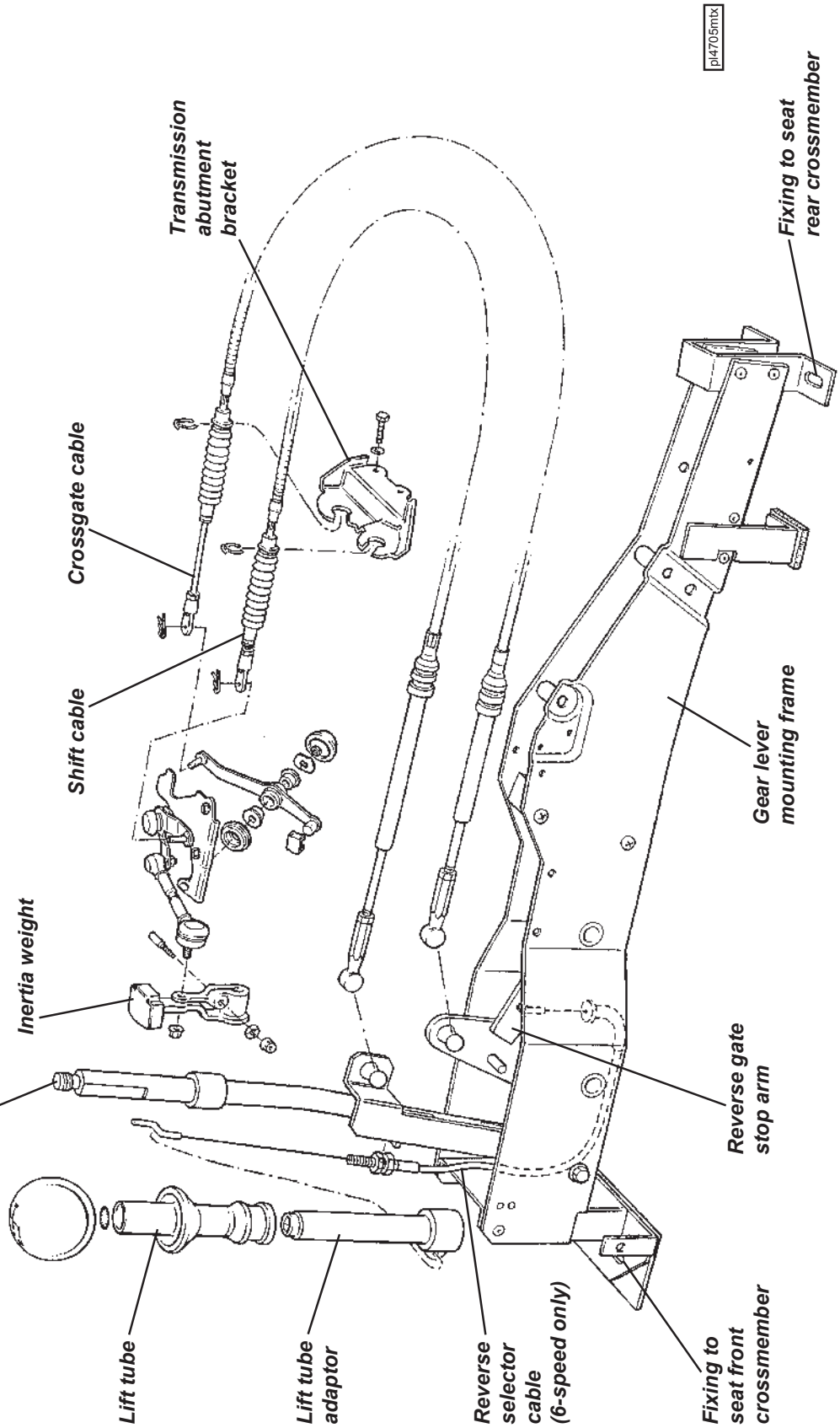

Downloaded from www.Manualslib.com manuals search engine

Gearlever Mounting Frame

The gear lever/parking brake lever mounting frame is common to right and left hand drive cars, but is mounted offset towards the passenger side of the car in order to allow sufficient room for fore/aft adjustment of the driver's seat. The frame is secured to thread inserts in the seat mounting crossmembers by two M8 screws at the rear, which also secure the seat runner/frame, and two M8 screws at the front. All fixings using captive nuts in the seat mounting crossmembers.

Gearlever Replacement (prior May '07)

The gear lever alone may be replaced if necessary using the following procedure. Note that fabrication of the gear lever was changed in February 2005 from using a hexagonal section bar to a thicker round section bar, the better to resist operator abuse. Only the later type will be supplied in service, which if being used to replace the hexagonal type will require fitment of the following parts as a set:

Parts Required	Part Number	Qty
Gear Lever - RHD	A120F0008S	1
Gear Lever - LHD	A120F0009S	1
Lift Tube, reverse select	B120U0017F	1
Lift Tube Adaptor	B120F6259S	1
Spring Clip, lift tube to adaptor	B120W6770F	1
Knob, gear lever, M10	C120U0012F	1
Grub Screw, M5 x 16, gear knob	A120W5292F	1
Tool, gear lever bush guide	A120U0054S	1

Procedure

1. Release the grub screw (if applicable) in the front face of the gear lever knob, and unscrew the knob. For knobs without grub screws, gentle heat may help to soften the thread adhesive. Prise off the spring clip from the top of the lift tube adaptor.

2. Release the two grub screws in the underside of the parking brake lever sleeve and withdraw the sleeve.

3. Remove the two screws securing the front of the gear lever shroud and carefully withdraw the gear/park brake shroud, disconnecting the window switch and hazard lamps switch (if applicable). Take care to prevent scratching the shroud on seat belt fixings or seat runners.

4. Release the reverse selector cable from the gear lever and unhook from the lift tube adaptor. Discard the adaptor.

5. Prise off the gear selector cable socket from the gear lever (use a 10mm spanner).

6. From the LH side of the unit, remove the screw securing the gear lever pivot to the mounting frame. Push the top of the gear lever to the right to help disengage the crossgate selector ball at the bottom of the lever from the bellcrank lever socket. Take care not to damage the socket plastic bush which should remain in the bellcrank lever. Discard the gear lever.

7. To allow fitment of the bush guide tool, unhook the main harness from the 'P' clip at the front of the frame, temporarily hook over the outside of the shroud fixing leg and rotate the 'P' clip 90°. Locate the guide tool in the hole at the RH side of the mounting frame and secure in position using a 'G' clamp as shown, but do not crush or distort the frame.
   Note: Attempting to fit the gear lever ball into the socket and bellcrank lever without the use of the special guide tool, is likely to result in damage to one or more components and/or personal injury, physical or psychological.

Downloaded from www.Manualslib.com manuals search engine

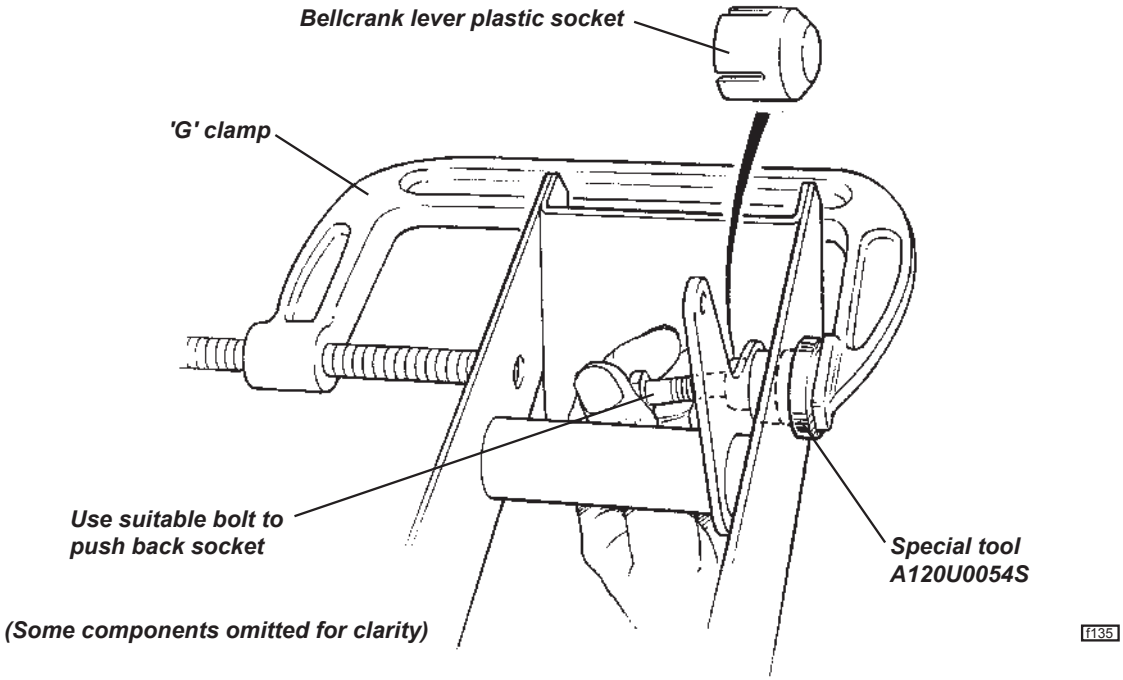

8. Push the plastic socket in the bellcrank lever fully into the guide tool to facilitate installation of the gear lever. Apply a dab of mineral oil based lithium grease (e.g. Molykote Longterm W2) to the socket.

9. Fit the gear lever, feeding the crossgate ball into the bellcrank lever and position the lever upright. Using a suitable screwdriver or pry bar, push the base of the lever over to the right to engage the crossgate ball into the plastic socket (should click home).

10. Remove the 'G' clamp and guide tool, and push the crossgate socket to the left to engage the 'D' feature on the gearlever pivot ball with the matching hole in the LH side of the frame. Apply Permabond A130 (A912E6033V) to the fixing screw and torque tighten to 10 Nm. Restore harness position.

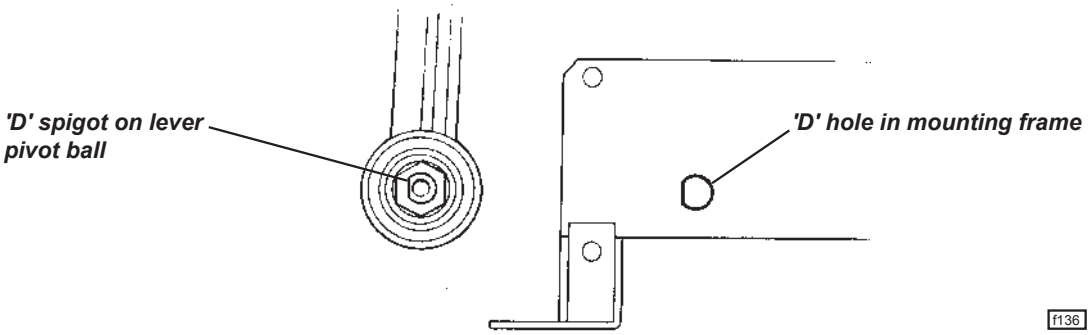

sn_fj_cyclone.indd 9 03/07/2006 15:06:32
Downloaded from www.Manualslib.com manuals search engine

11. Fit the new lift tube adaptor onto the gear lever and ensure it is free to slide up and down. Hook in the reverse selector cable and secure to the gear lever abutment. Temporarily fit the new lift tube onto the adaptor and screw on the new gear knob. Adjust the cable to allow correct reverse gear selection and tighten adjuster nuts. Remove gear knob and lift tube. Clip the selector cable onto the gear lever ball.

12. Cut the tie strap securing the old lift tube in the gear lever gaiter and fit the new lift tube using a suitable tie strap. Fit the shroud over the parking brake and gear lever, taking care not to scratch the surface finish, and aligning the flats on the lift tube with those on the lift tube adaptor. Connect the electrical switches as necessary, and retain the shroud with the two screws.

13. Use the new spring clip to secure the lift tube to the adaptor, and fit the new gear knob, tightening the grub screw to orientate the graphic correctly. Fit and secure the parking brake lever sleeve.

14. Check gear selection and reverse inhibit function. Ensure the lift tube returns freely under spring action.

FJ.3 - LUBRICATION

The transmission should be checked for oil leaks, for the correct oil level, and the oil renewed, at intervals specified in the Maintenance Schedule.

Transmission oil viscosity;	SAE 75W/90
Specification;	API GL-4 or GL-5
Quantity; - 6 speed	2.3 litres
- 5 speed	1.9 litres

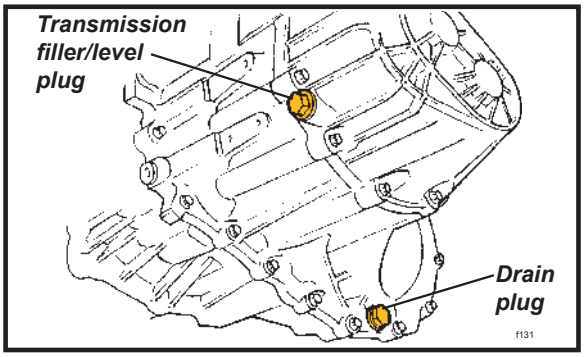

To check the oil level:
- Remove the engine bay undertray.
- Wipe clean the area around the socket headed level plug on the front face of the transmission main casing.
- Remove the plug, and check that the oil is level with the bottom of the hole. Note that the release of oil trapped by the plug, should not be confused with an indication of correct oil level.
- If necessary, add only the specified lubricant (see above) via the level plug hole until the oil level stabilises at the bottom of the plug hole.
  Alternatively, oil may be added into the top of the transmission via a mechanical speedo drive (not used in this application) cover at the right hand top of the transmission, after removing the single screw.
- Refit the level plug with a new sealing washer, and tighten securely.

To renew transmission oil:
- The hexagon headed drain plug located at the bottom of the final drive casing, should be removed immediately after a run when the oil is warm, taking suitable precautions against scalding.
- Clean the plug, fit a new sealing washer and refit securely.
- Refill to the level plug hole as detailed above.

sn_fj_cyclone.indd 10 03/07/2006 15:06:32
Downloaded from www.Manualslib.com manuals search engine

FJ.4 - DRIVE SHAFTS

Each of the two driveshaft assemblies comprises a steel shaft with a constant velocity joint at each end, and is used to transmit the drive from each differential output gear to the rear wheel hub. The two driveshaft assemblies are similar, but the inboard joint of the right hand shaft is supported in an outrigger bearing bolted to the right hand side of the cylinder block, and uses an integral extended shaft to reach into the transmission housing. The inboard joints are of a plunging 6-ball double offset design to accommodate driveshaft length variation with suspension travel, whereas the outboard joints are high efficiency 8-ball fixed type.

Replacement outboard joints include the main driveshaft (longer on the RH side), outboard C.V. joint and gaiter. Replacement inboard joints include the inner C.V. joint and gaiter kit, with the extended stub shaft of the RH joint also including the support bearing and mounting bracket.

The joints themselves are packed with grease on initial assembly, and are maintenance free. It is however vitally important that the protective gaiters are carefully inspected at service intervals, to check for splits, tears or punctures, since the joint will deteriorate very quickly once contaminated with dirt or water. Damaged gaiters should be renewed immediately, once the servicibility of the joint has been established.

CAUTION: The outboard C.V. joint gaiter can suffer 'pinch' damage if the joint is subjected to extreme articulation off the car, or during driveshaft removal/refitment.

RH Driveshaft Assembly

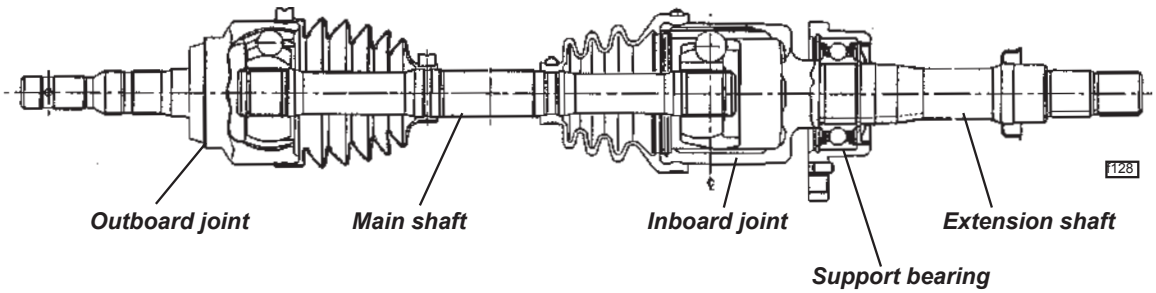

LH Driveshaft Assembly

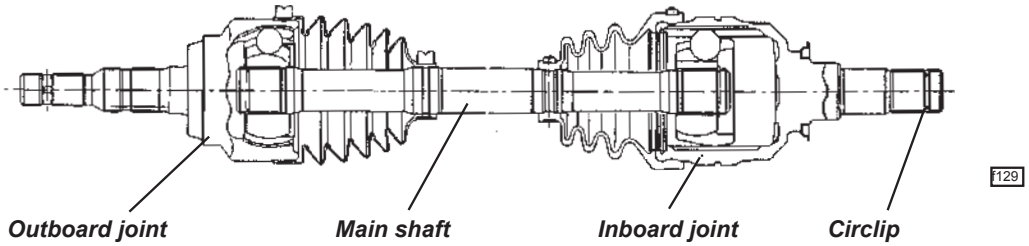

sn_fj_cyclone.indd 11 03/07/2006 15:06:33
Downloaded from www.Manualslib.com manuals search engine

Clicking noises, torque reversal 'clonks', or shudder and vibration when accelerating are all possible symptoms of worn C.V. joints. It should not be possible to discern any free play in a joint, but care must be taken not to confuse this with transmission backlash, which may be considerable. Any symptoms that could be due to worn driveshaft joint assemblies, should be investigated and rectified without delay, since safety considerations are always of paramount importance.

The inboard C.V. joint is equipped with a male splined spigot shaft which engages with the female splines of the differential output sun gear, with the LH shaft retained by a round section spring circlip on its end, and the RH shaft retained by the extension shaft support bearing. Each of the two transmission output oil seals runs on a stepped shoulder on the C.V. joint spigot shaft. The stub shaft of each outboard joint is splined into the wheel hub, and retained by a nut on the threaded end of the shaft.

Driveshaft Assembly Replacement

Removing a driveshaft assembly from the transmission will result in some loss of transmission lubricant. It may be preferred to drain off some oil via the transmission drain plug beforehand.

1. Remove transmission drain plug and drain off approx. 1 litre of oil into a clean container for re-use.

2. Remove the rear road wheel.

3. Remove the split pin from the hub nut and remove the nut and washer (right hand thread on both sides). Before the shaft can be withdrawn from the hub, the top ball joint plinth must be released from the hub carrier (note camber shims fitted), and the toe-link ball joint separated from the carrier. This will allow the hub carrier to be pulled away sufficiently for the driveshaft to be withdrawn, but take care not to strain the brake hose or wheel speed sensor harness.

4. *LH Driveshaft:* The left hand driveshaft inboard joint is retained in the transmission by a round section circlip. The joint may be removed by applying a shock pull to the C.V. joint body using a slide hammer with a forked end.
   CAUTION: Do NOT attempt to remove the inboard C.V. joint from the transmission by pulling on the driveshaft. The balls of the inboard joint are restrained for transit purposes only, by a circlip at the end of the ball tracks. Applying an extension force to the joint will damage the balls and require joint replacement. Apply pressure only to the outer body of the joint.
   RH Driveshaft: The right hand driveshaft incorporates a bearing for the extension shaft and it is this which retains the shaft in the transmission. Remove the two bolts securing the bearing bracket, and withdraw the complete shaft assembly.
   When withdrawing either driveshaft from the transmission, take care not to damage the output oil seal.

6. Before re-fitting a driveshaft, first renew the round section circlip on the end of the left hand inboard joint spigot shaft, and lubricate the circlip with grease. Also, check the condition of the transmission output seal, and renew if necessary. Lubricate the lip of the seal with transmission oil, and grease the corresponding shoulder on the driveshaft (C.V. joint) spigot, to reduce the danger of damaging the seal on assembly.

7. Carefully insert the driveshaft into the transmission, with, on the left hand shaft, the two ends of the circlip positioned lowermost, and rotate the shaft if necessary to engage the splines. Press the inboard joint outer until a click indicates the engagement of the retaining circlip, if necessary using a brass drift and hammer. Pull on the body to ensure its security. On the right hand shaft, fit the bolts securing the extension shaft bearing to the engine mounted bracket, and torque to 64 Nm.

8. Fit the outer end of the shaft into the hub, and refit the top ball joint plinth to the hub carrier with the camber adjustment shim pack in position. Apply Permabond A130 (A912E7033V) to the threads of the two socket head bolts and torque to 45 Nm.

9. Refit the toe-link into the hub carrier and torque the retaining nut to 55 Nm.

10. Fit the washer and castellated nut to the driveshaft, apply the parking brake and tighten the nut to 220 Nm. Fit a new split pin to lock the nut.

11. With the car on a level surface, top up the transmission oil to the filler/level plug hole.

sn_fj_cyclone.indd 12 03/07/2006 15:06:33
Downloaded from www.Manualslib.com manuals search engine

Driveshaft C.V. Joint and/or Gaiter Replacement

The outboard C.V. joint is supplied complete with main driveshaft to which it is fixed by a spline with a small helix angle to eliminate any potential backlash. Separation of the shaft from the joint should not be attempted. Note that the RH main shaft is 22mm longer than the LH shaft. Replacement of the outboard joint gaiter entails removal of the complete driveshaft assembly from the car, and removal of the inboard joint from the shaft.

1. Remove the driveshaft assembly from the car (see above).

2. Remove the clips securing the inboard joint gaiter without damaging the gaiter if it is to be re-used. Pull the gaiter off the joint outer body, remove the circlip in the end of the joint outer body and match mark the body to the joint inner race before sliding the body off the shaft assembly.

3. Remove the circlip from the end of the shaft and match mark the inboard joint inner race to the shaft before pulling or pressing the race from the shaft. Slide the inboard gaiter off the shaft.

4. Remove the clips securing the outboard gaiter, and slide the gaiter off the shaft.

5. Inspection & Cleaning: Complete disassembly of either joint is NOT recommended. The separate components are a precision fit and develop their own individual wear patterns, such that any interchanging or re-orientation of parts is likely to result in premature failure.
   If the grease in the joint is contaminated with dirt or water, it is likely that the joint is damaged, and should be replaced. If the grease is not contaminated, the joint should be degreased by soaking in a suitable solvent (NOT petrol), and then carefully inspected. Tilt the inner race to one side to expose each ball. Severe pitting, galling, play between ball and its cage window, any cracking or damage to the cage, or pitting, galling or chips in raceways, call for joint replacement.
   If the joint is found to be serviceable, it must be repacked with the special grease provided. Pack the grease into the joint itself and also into the inside of the new gaiter.
   NOTE: The grease provided in the kits is specially formulated for wear resistance and durability. DO NOT use substitutes or mix with other lubricants. The grease specification and quantity also differs for inboard and outboard joints:
   Inboard: 140g NKG 205 99-1089#BJ95
   Outboard: 130g NTG 2218M 99-729#BJ100 (inboard grease is also supplied as the inboard joint must be removed before fitting outboard gaiter)

6. Slide the new outboard gaiter and smaller retaining clip onto the shaft. Fit the gaiter into the grooves on the outboard joint body and the driveshaft, and secure with the clips provided.

7. Slide the new outboard gaiter and retaining clip onto the driveshaft and press the joint inner race onto the driveshaft splines with the match marks aligned (if re-using joint). Retain with a new circlip.

8. Fit the inboard joint body to the shaft assembly with the match marks aligned (if re-using joint), and fit a new circlip into the end of the housing to retain the joint.

9. Fit gaiter into the grooves on the joint outer body and driveshaft and secure with new gaiter clips.

10. Refit the driveshaft to the car (see above).

Extension Shaft Support Bearing

The ball bearing supporting the RH driveshaft extension shaft to the engine block is mounted in a housing which is bolted to a bracket on the engine block. The bearing is sealed and maintenance free, and is included as part of the inboard C.V. joint assembly, but may if necessary be renewed by the following procedure:

1. Remove the RH driveshaft assembly (see above).

2. Using a press, remove the dust shield from the inboard end of the shaft.

3. Remove the circlip from the outboard face of the bearing housing, and press or pull the housing from the bearing.

sn_fj_cyclone.indd 13 03/07/2006 15:06:33
Downloaded from www.Manualslib.com manuals search engine

4. Prise or pull the bearing dust shield off the shaft.

5. Remove the circlip retaining the bearing and press or pull the bearing from the shaft.

6. Press a new bearing into the housing, and retain with a new circlip. Then use special press tool T000T1438F to press the inner race of the bearing up to the shoulder on the shaft, and retain with a new circlip.

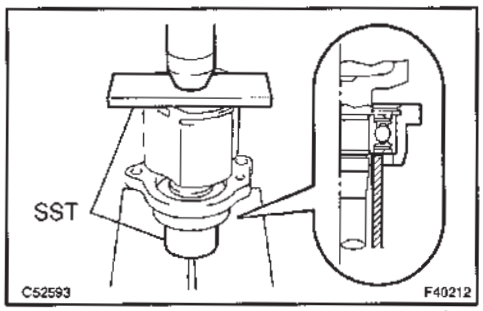

f125

7. Use special press tool T000T1439F to press the bearing dust shield onto the shaft and position as shown in the illustration.

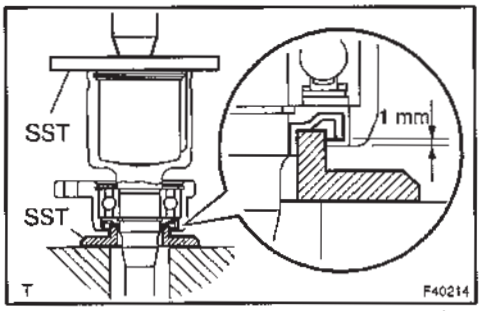

f126

8. Press the inboard dust shield onto the end of the shaft to the dimension shown in the illustration.

9. Refit the driveshaft to the car (see above).

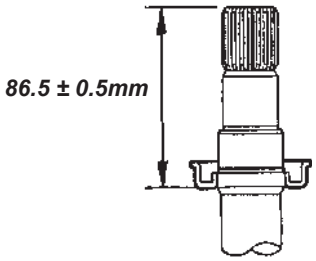

f127

FJ.5 - TRANSMISSION REPLACEMENT

The transmission may be removed from below after removing the left hand rear suspension assembly, both driveshaft assemblies and the exhaust system. Release the clutch release fork, gearchange cables, earth braid and reverse light switch.

The engine must be supported to allow the engine and transmission mountings to be disconnected and the power unit tilted as necessary to allow the transmission to be withdrawn. The clutch bell housing is secured to the engine by 8 bolts as shown overleaf.

sn_fj_cyclone.indd 14 03/07/2006 15:06:34
Downloaded from www.Manualslib.com manuals search engine

Clutch housing to engine fixings - viewed from gearbox side

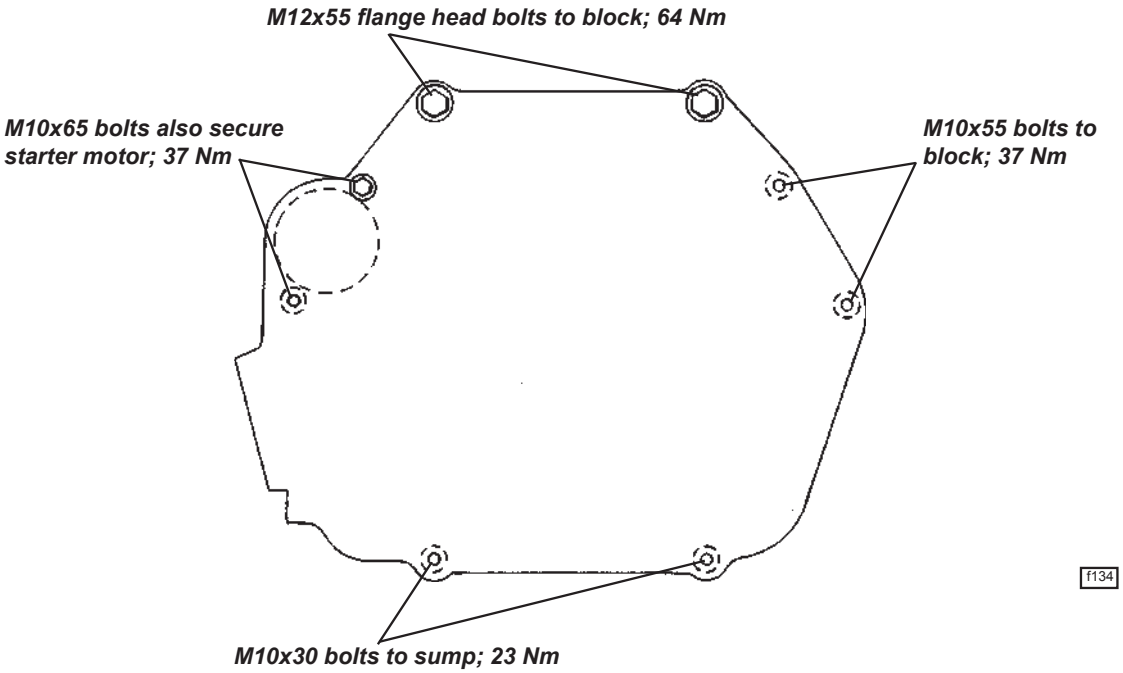

FJ.6 - TRANSMISSION OVERHAUL

The overhauling of the Toyota supplied type C64 transmission, is detailed in separate publication D120T0327J which may also be used for guidance with the C56. Special tools are available through Lotus under the following part numbers:

Transmission Special Tools

Description	***Lotus Part No.***
Press Dolly, driveshaft bearing	T000T11438F
Press Dolly, driveshaft bearing shield	T000T1439F
Oil Seal Puller	T000T1445S
Differential Preload Adaptor	T000T1446S
5th/6th Gear Puller Kit	T000T1447
comprises:	
Upper Plate	T000T1447/1
Centre Bolt	T000T1447/2
Arm (x3)	T000T1447/3
Adaptor	T000T1447/4
5th/6th Synchro Hub Puller Kit	T000T1448
comprises	
Hanger	T000T1448/1
Slide Arm (x2)	T000T1448/2
Centre Bolt	T000T1448/3
Claw no.2 (x2)	T000T1448/4
Holder	T000T1448/5
Output Shaft Seal Replacer Dolly, LH	T000T1459F
Output Shaft Seal Replacer Dolly, RH	T000T
Output Shaft Seal Replacer Handle	T000T1460F

sn_fj_cyclone.indd 15 03/07/2006 15:06:34
Downloaded from www.Manualslib.com manuals search engine

Transmission Overhaul Notes

1. Removing and installing 5th and 6th driven gears from the end of the ouput shaft requires considerable force. The specified puller tools should be used, but when pulling 5th speed driven gear, the claws of the tool may require some grinding to allow complete and proper fitment, and an anti-spreading device is recommended to be fitted around the three claws. Striking the puller bolt with a hammer in between tightening steps will help shock the gear from its interference fit, and engaging two gears to lock the transmission will also aid the process.

2. The preload on the differential carrier taper roller bearings is controlled by shims between the bearing outer race and the clutch housing, and is determined by installing the final drive assembly in an otherwise empty casing, and measuring the steady rotation torque.

3. If the input shaft oil seal is to be replaced, the bearing should also be renewed since this is likely to be damaged during oil seal removal.

4. The reverse select compression spring shown in the Toyota Repair Manual is not fitted in the Lotus application.

5. For cars fitted with a limited slip differential, note the following:

- Apart from the taper roller bearings supporting the differential assembly in the transmission case, the unit is not serviceable.
- The tightening torque of the bolts securing the final drive gear to the differential assembly = 101 Nm (Std. diff. = 77 Nm).
- When setting the differential bearing preload (see page 41-28 in Toyota manual D120T0327J) note that a different procedure must be used due to the construction of the LSD. Instead of fitting only the differential assembly into the transaxle/transmission case, and then measuring the turning torque directly at the differential, LSD versions require that the differential and output shaft be assembled into the casings, and the turning torque measured by using a torque wrench (27mm socket) on the end of the output shaft.
- Bearing preload (at starting):
  New bearings: 0.17 - 0.35 Nm (1.7 - 3.6 kgf.cm)
  Used bearings: 0.11 - 0.22 Nm (1.1 - 2.2 kgf.cm)
- Adjustments are made as for non-LSD.
- There is no special oil requirement for the LSD.

sn_fj_cyclone.indd 16 03/07/2006 15:06:34
Downloaded from www.Manualslib.com manuals search engine

WHEELS & TYRES

SECTION GH

	Sub-Section	Page
General Description	GH.1	2
Wheels	GH.2	2
Tyres	GH.3	4
Winter Tyres & Snow Chains	GH.4	5
Punctured Tyre Emergency Inflator	GH.5	6
Tyre Pressure Monitoring System (TPMS) - '08 onwards USA only	GH.6	7

Downloaded from www.Manualslib.com manuals search engine

GH.1 - GENERAL DESCRIPTION

The single piece, light alloy roadwheels are factory fitted with tyres engineered to provide the optimum balance of ride and handling characteristics. In order fully to exploit the dynamic qualities and packaging opportunities, the wheel and tyre sizes are different front and rear, so that interchanging of wheels and tyres between axles is not permissible. Note that the tyre tread pattern of both tyre types is directional, and must be fitted on the wheel with sidewall arrow pointing in the direction of forward rotation.

The tyres should be inspected frequently by the vehicle user, and also at every service, for signs of cuts, abrasions or other damage, and for any uneven tread wear patterns. Uneven treadwear may indicate that the suspension geometry or dampers require attention. Care should be taken when parking to avoid tyre contact with high or sharp edged kerbs, as mistreatment of this nature can cause internal damage to the tyre structure which may not readily be apparent. The alloy wheel rims may also be distorted or damaged by careless parking, and result in wheel imbalance or loss of tyre pressure. Safety considerations should always be paramount when assessing tyre condition and serviceability, and the tyres replaced if any doubt exists, or if the legal tread depth limits are approached.

The cold tyre pressures should be checked every week, or every 1,000 miles (1,700 km), whichever is the sooner, and corrections made as necessary. Under-inflation will cause excessive wear, rapid deterioration of the tyre sidewalls and heavy steering, whereas overinflation results in a hard ride and increased susceptibility to tyre damage. Both conditions will cause a degradation in the vehicle handling qualities. It is important that the tyre pressures are adjusted only when the tyres are cold (driven less than one mile), as the pressures may increase by 0.3 - 0.5 bar (4 - 8 lb/in²) when the tyres are warmed to normal running temperature. The tyre valve dust cap should always be replaced in order to prevent the ingress of dirt and moisture into the valve, which could cause leakage.

When balancing the wheel and tyre assemblies, the wheels should be located by the centre spigot - NOT by the wheel bolt holes. In order to maintain the correct handling feel and minimum steering wheel shake, it is very important that the radial and lateral run out of the tyres are to the high standard required by Lotus Cars. If any difficulty is experienced with replacement tyres, refer to the tyre manufacturer.

The Bridgestone Potenza, Yokohama AD07 or Yokohama A048 tyres fitted to the Elise are suitable for all normal weather conditions, but are optimised for dry road sports driving. The tyre characteristics include good feedback (‘feel’) from the road surface to the steering wheel, a high level of steering linearity and response, and little performance degradation with the high temperatures which may be reached on track. However, tyre performance will decrease at low ambient temperatures, resulting in reduced levels of grip and an increased susceptibility to damage from impacts. In these conditions, especially below 15°F (-10°C), it is recommended to fit a vehicle set of the recommended winter tyres (see below).

GH.2 - WHEELS

Elise: Standard wheels on the Elise 111R and Elise for North America, are the same style and rim sizes as used on the Rover powertrain Elise 111S; Cast alloy 8-spoke in 'high power' silver, 5.5Jx16 and 7.5Jx17. The rear wheels of Toyota powertrain cars however have a greater inset (38mm vs. 17.75mm) to compensate for the suspension pick up points having been moved further outboard. In addition, the wheels have been tested and approved to a higher load rating, and whereas Rover powertrain cars may use the later 'B' level front wheels, no Toyota powertrain model should be fitted with the earlier type 'A' level front wheel. For identification, refer to the 'max. load' rating marked on the inside of a wheel spoke: 'A' level = 230 kg; 'B' level = 255kg.

Exige: These models use unique, black finished wheels featuring 8 Y-spokes, and are fitted with wider, 6.5J front wheel rims to accommodate the wider A048 front tyres.

Option: Optional wheels include unique a lightweight forged alloy, 7split-spoke design, using the wider front rim size. These wheels are available in either painted or natural anodised finishes, but it is important to be aware that the natural anodised surface finish may be attacked by some proprietary wheel cleaning products. Wash only using hot soapy water or car bodywork shampoo. Advise tyre fitting companies accordingly. From '06 M.Y. these forged wheels were also made available in a 6.0J front size to allow the use of standard tyre sets with 175 width front tyres, as well as accommodating the 195 section A048s. Colours and finishes of road wheels are subject to marketing factors and may differ from the above.

Downloaded from www.Manualslib.com manuals search engine

Type	- Std.	- Elise	Rimstock, cast alloy, 8 spoke, Hi-power Silver
		- Exige	Rimstock, cast alloy, 8 Y-spoke, Black
	- Option		Rimstock, lightweight forged alloy, 7 split-spoke, Silver painted or natural anodised finish.
Front wheel max. load rating			255 kg
Size	- front	- Elise std	5.5J x 16 (cast)
		- Elise option	6.0J x 16 (forged + AD07 or A048)
		- Elise option	6.5J x 16 (forged + A048)
		- Exige	6.5J x 16
	- rear		7.5J x 17
Inset	- front	- 5.5J & 6.5J	+ 31.3 mm
	- front	- 6.0J	+ 25.0 mm
	- rear		+ 38.0 mm
PCD			100 mm
Wheel bolt torque			105 Nm (77.5 lbf.ft)
Centre spigot hole diameter			56.5 mm
Radial run-out at bead seat			0.3 mm max.
Lateral run-out at bead seat			0.3 mm max.

Note that the inset figure is the displacement of the wheelrim centreline relative to the wheel/hub mounting face. A positive inset indicates that the wheelrim centreline lies inboard of the wheel mounting face, whereas a negative inset means the wheelrim centreline is outboard of the mounting face.

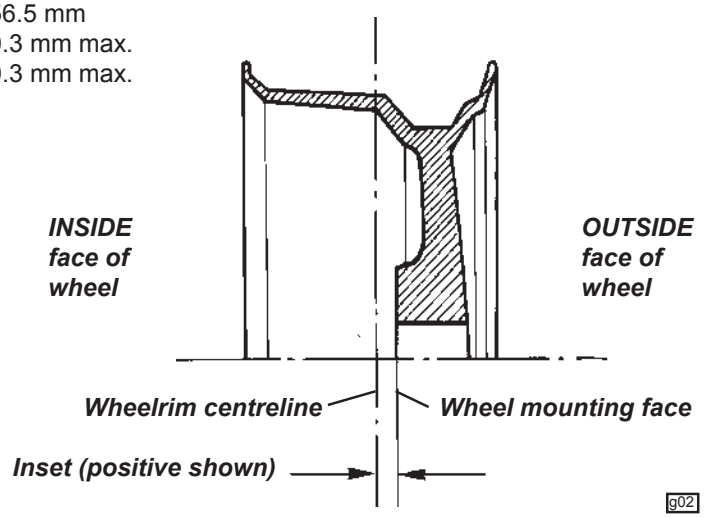

Wheel Bolts

The wheel bolts used are of a special design to suit the small diameter fixing tunnels in the wheel centres. The bolts have an M12x1.75 thread, 60° conical seat, and a 10 spline socket head for which a special extension tool is supplied with the car.

A 17 mm a/f deep socket and 1/2 inch square drive wrench should be applied to the extension tool, with a tightening torque of 105 Nm required.

Note that on models specified with upgraded, 4-piston, front brake callipers, the disc mounting bells are increased in thickness to provide the necessary wheel clearance to the callipers. This also demands longer wheel bolts which use the standard spline head, with no coded security bolts fitted:

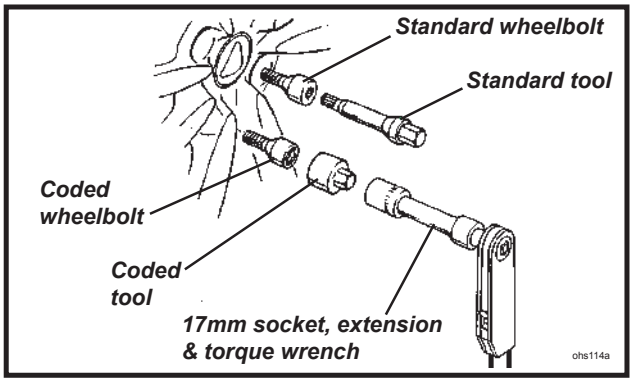

Standard bolt;	B117G6000F	26mm thread length	Head outside diameter: 22mm
Long bolt;	C117G6000F	28mm thread length	Head outside diameter: 19mm

To protect against wheel theft, one of the four bolts securing each wheel is key coded, and requires a corresponding coded extension tool. Rotate the tool until full engagement into the bolt head is ensured before applying release torque. Note that an alignment mark is provided on the coded bolt head and tool to aid refitting. Both the standard and coded spline drive extension tools are stowed in the vehicle tool kit, and should remain with the car at all times to allow servicing to be performed.

Downloaded from www.Manualslib.com manuals search engine

A sticker with the code number is supplied with the vehicle for safe keeping by the vehicle owner. This code will enable dealers to order a replacement coded extension tool if necessary. It is the responsibility of the dealer to verify the legitimacy of any customer request for a coded tool. Typical security code; FEOR17025

GH.3 - TYRES

Elise 111R prior '06 M.Y.: Lotus engineers worked with the tyre manufacturer Bridgestone, to produce a version of the 'Potenza RE040' tyre specifically for the Lotus Elise 'Mk.2' including Elise 111R, to optimise performance on both road and track. This tyre is identified by the construction code element of the DOT code moulded on one of the tyre sidewalls, and it is most important that ONLY this version is fitted if the correct handling characteristics are to be maintained.

D O T #### *** ####

Front tyre code = CFE Rear tyre code = DCK

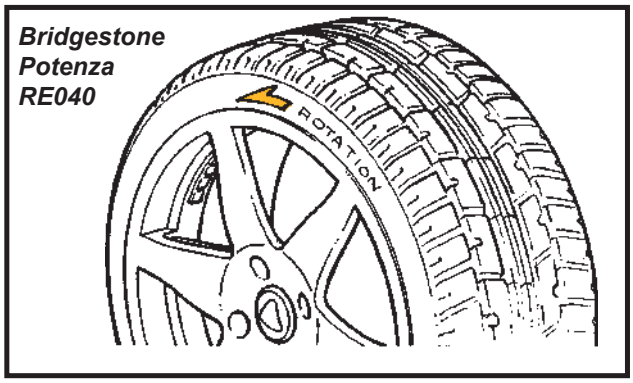

At the introduction of the 111R, the speed rating of the tyres was uprated from 'V' to 'W', without any physical change to the construction. For legal reasons, only tyres marked with a 'W' rating should be used on the 111R.

Wear indicators are moulded into the bottom of the tread grooves at intervals around the tyre, indicated by small pointers on the outer tread blocks.

The tyres should be replaced before being worn to this minimum legal tread depth. Note that the 'Potenza' tread pattern is directional, so that the tyre must be fitted onto the wheel with regard to which side of the car the wheel is to be fitted. A direction of rotation arrow is included in the tyre sidewall markings.

Tyre type		Bridgestone Potenza RE040
Size	- front	175/55 R16 80W
	- rear	225/45 R17 90W
Identification code (see above)	- front	CFE
	- rear	DCK
Pressure (cold)	- front	1.8 bar (26 lb/in²)
	- rear	2.0 bar (29 lb/in²)

Exige & Elise Option: These models are fitted with Yokohama A048 tyres, which have been developed jointly by Lotus and Yokohama to suit the requirements of the performance driver, with special emphasis on track use.

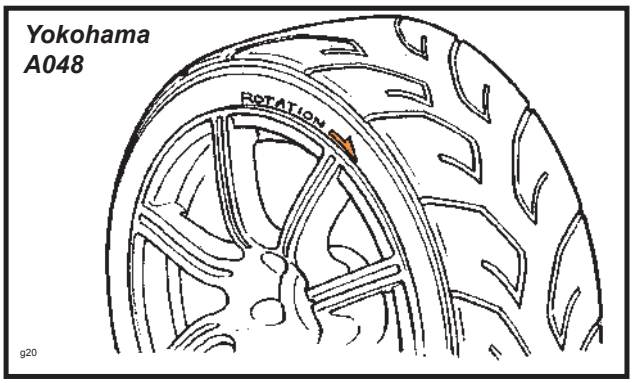

Compared with the standard tyre, the front tyre width is increased and the profile reduced from 175/55 to 195/50. The tyre tread design is directional, such that each wheel/tyre assembly is dedicated to a single vehicle corner. The Lotus specific construction is identified by the letters 'LTS' moulded on the tyre sidewall. Ensure that any replacement tyre is so marked.

On Elise models, in order to maintain sufficient vehicle stability with these track based tyres, Lotus approves of A048s only in conjunction with sports suspension. The tyres should not be fitted on standard specification wheels, or with standard suspension.

Downloaded from www.Manualslib.com manuals search engine

Type		Yokohama A048 'LTS'
Size	- front	195/50 R16 84W
	- rear	225/45 R17 90W
Pressure (cold)	- front	1.8 bar (26 lb/in²)
	- rear	2.0 bar (29 lb/in²)

Elise 111R from '06 & R + USA Elise: These cars are fitted with Yokohama AD07 tyres developed specifically for the Elise, and are optimised for dry road sports driving. The Lotus specific construction is identified by the letters 'LTS' moulded on the tyre sidewall. Ensure that any replacement tyre is so marked.

Note that the AD07 tread pattern is directional, so that the tyre must be fitted onto the wheel with regard to which side of the car the wheel is to be fitted. A direction of rotation arrow is included in the tyre sidewall markings.

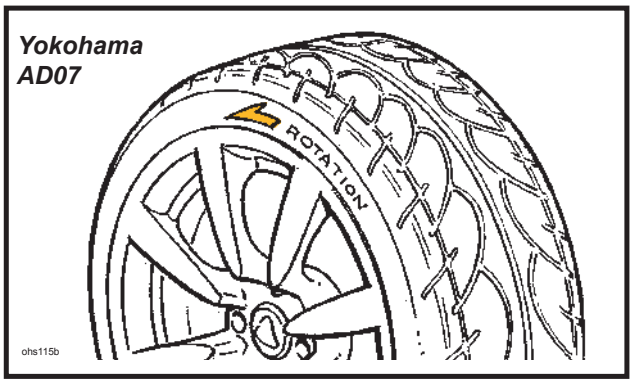

Type		Yokohama Advan Neova AD07
Size	- front	175/55 R16 80W
	- rear	225/45 R17 91W
Pressure (cold)	- front	1.8 bar (26 lb/in²)
	- rear	2.0 bar (29 lb/in²)

Tyre Characteristics: All standard equipment tyres fitted on the Elise are suitable for all normal weather conditions, but are optimised for dry road sports driving. The tyre characteristics include good feedback ('feel') from the road surface to the steering wheel, a high level of steering linearity and response, and little performance degradation with the high temperatures which may be reached on track. However, tyre performance will decrease at low ambient temperatures, resulting in reduced levels of grip and an increased susceptibility to damage from impacts. In these conditions, especially below -10°C (15°F), it is recommended to fit a vehicle set of the recommended winter tyres (see below).

GH.4 - WINTER TYRES & SNOW CHAINS

If the car is to be used in very cold territories, or driven on snow covered roads, it is recommended to fit winter tyres developed specifically for such conditions.

Winter Tyres

Type	- front	Pirelli 210 Snowsport
	- rear	Pirelli 240 Snowsport
Size	- front	195/50 R16
	- rear	225/45 R17
Pressure (cold)	- front	1.8 bar (26 lb/in²)
	- rear	1.9 bar (27.5 lb/in²)

WARNING:
- **When winter tyres are fitted, a maximum speed of 118 mph (190 km/h) must be observed.**
- **The tyres are NOT suitable for studding.**

Snow Chains

In extreme conditions, Lotus approves the fitment of Pewag Neon X3 - NX 373 snow chains, used only in conjunction with winter tyres (see above) and fitted on only the rear wheels. Close attention should be paid to the fitting and tensioning instructions supplied with the chains, and the chains should be removed as soon as road conditions allow.

Downloaded from www.Manualslib.com manuals search engine

GH.5 - PUNCTURED TYRE EMERGENCY INFLATOR (IF FITTED)

In order fully to exploit the benefits of light weight, and to maximise stowage space, no spare wheel is included in the Elise specification, but a temporary puncture repair facility is provided in the form of a tyre inflator aerosol. The aerosol is mounted in spring clips at the extreme right hand front corner of the rear luggage compartment.

When the aerosol is connected to the tyre valve, and the button pressed, a mixture of liquid latex and propellant is injected into the tyre, such that the solidifying latex is forced into the puncture site at the same time as the tyre is inflated, effecting a temporary repair and enabling the car to be driven at moderate speed to the nearest tyre depot.

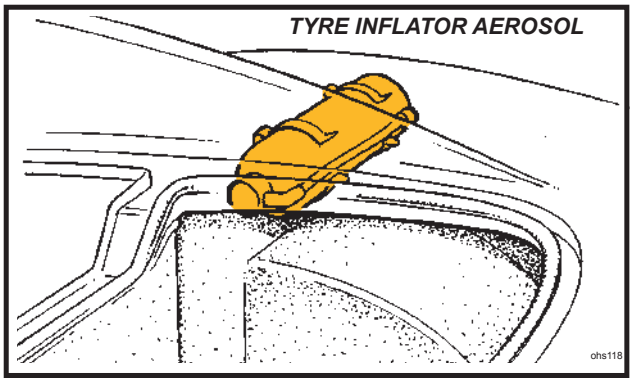

WARNING:

- **Use of the aerosol does not constitute a permanent repair, but is designed to allow the car to be driven to the nearest tyre depot. At the earliest opportunity, the tyre should be professionally repaired or replaced dependent on the severity of the damage.**
- **Until the tyre is repaired or replaced, the car should be driven in a moderate manner, not exceeding 30 mph (45 km/h).**
- **Do not use the aerosol for large holes or repairs, or when the tyre sidewall has been damaged, or if the tyre has been displaced from the rim.**
- **For safety reasons, the aerosol should be carried at all times in the designated stowage position. Never carry in the passenger compartment.**

As soon as a puncture is suspected, the car should be stopped at the first safe opportunity. Continued driving on a deflated tyre will cause irreparable damage to the tyre.

Directions for use of the aerosol: Before using, carefully read all the instructions on the canister, or on any literature accompanying the product. The following instructions apply to the use of Holts Tyreweld:

1. Remove the object causing the puncture, and position the wheel with the puncture site lowermost. Deflate tyre fully.

2. Shake the can vigorously. In cold conditions, warm the can using the car's heater outlets, or by body warmth.
3. Screw the aerosol tube onto the tyre valve, remove the cap, hold the can upright and press the button until the tyre is firmly inflated.

4. Immediately drive for 6 - 12 miles (10 - 20 km) (or to the tyre depot if nearer) in a moderate manner and not exceeding 30 mph (45 km/h), to allow the sealant to spread. Then check and adjust the tyre pressure as necessary.

5. Have the tyre professionally repaired or replaced at the earliest opportunity, and until such time, limit speed to 30 mph (45 km/h) with a moderate driving manner. Note that some tyre repairers may make an additional charge for cleaning the sealant off the tyre before repair, and that any subsequent repairs may not be guaranteed. If the vehicle is equipped with low tyre pressure monitoring equipment, be aware that the pressure sensor mounted inside the tyre, could be obstructed by the sealant, and should be replaced at the next opportunity.

6. Renew the puncture repair aerosol.

Downloaded from www.Manualslib.com manuals search engine

GH.6 - TYRE PRESSURE MONITORING SYSTEM (TPMS) - USA ONLY

All USA Elise/Exige models from '08 model year onwards are fitted with a tyre pressure monitoring system. A sensor incorporated into each of the tyre valves monitors the air pressure inside the tyre, and supplies an onboard control module with this data by radio transmission. If any tyre pressure should fall below 75% of the recommended value, an alert message is sent to the instrument panel, and the tyre pressure tell tale will light up amber. The fuel gauge display will then be overwritten with a message to indicate which tyre is concerned, with text such as: **LF Low** (left hand front tyre low pressure). This message will show for 5 seconds before the display reverts to the fuel level bar graph, but will repeat for 5 seconds at 30 second intervals.

The TPMS incorporates self-malfunction recognition, and if a fault is detected, the tell tale will flash for one minute and then remain constantly lit. The LCD panel will also flash 'TPMS FAULT' for 5 seconds, and repeat at 30 second intervals; no indication of low tyre pressure will be displayed.

Tyre fitters and service technicians should be made aware that TPMS is fitted, and that the tyre valves include pressure sensors. If the emergency tyre inflator aerosol has been used, it will be necessary to renew the tyre valve/pressure sensor. If a fault is indicated after wheel or tyre replacement, it is likely that a sensor has been incorrectly fitted or damaged. If a tyre valve is renewed, or is moved to a different wheel position, the TPMS will automatically identify the new configuration.

Note that the pressure sensors are powered by integral batteries, with an average service life of 10 years. It is recommended to renew all pressure sensors at this time interval.

If renewing a wheel, ensure that only a TPMS compatible wheel is used, as the installation angle of the the tyre valve is modified to accommodate the pressure sensor. Compatible cast wheels are identified by 'TPMS' within one of the recesses in the hub mounting face. On TPMS compatible forged wheels, the profile of the wheel rim outboard of the central well, is modified in order to allow local machining around the valve hole on the inside of the rim to provide a shallower installation angle. If no machining is evident, the wheel is not TPMS compatible. In addition, a batch code is engraved onto the inner rim in the form of 'PS123456'. The first three numbers indicate the week and year of manufacture, and any wheel with a code of PS267### (week 26 of 2007) or later, will be TPMS compatible. TPMS type wheels may be fitted on all cars.

Downloaded from www.Manualslib.com manuals search engine

STEERING

SECTION HG

	Sub-Section	Page
General Description	HG.1	2
Steering Wheel	HG.2	2
Upper Column Assembly	HG.3	5
Intermediate Column	HG.4	9
Front Wheel Alignment & Rack Gaiters	HG.5	9
Rack & Pinion Assembly Removal/Replacement	HG.6	10
Adjustment of Rack Bar Thrust Pad	HG.7	12

Downloaded from www.Manualslib.com manuals search engine

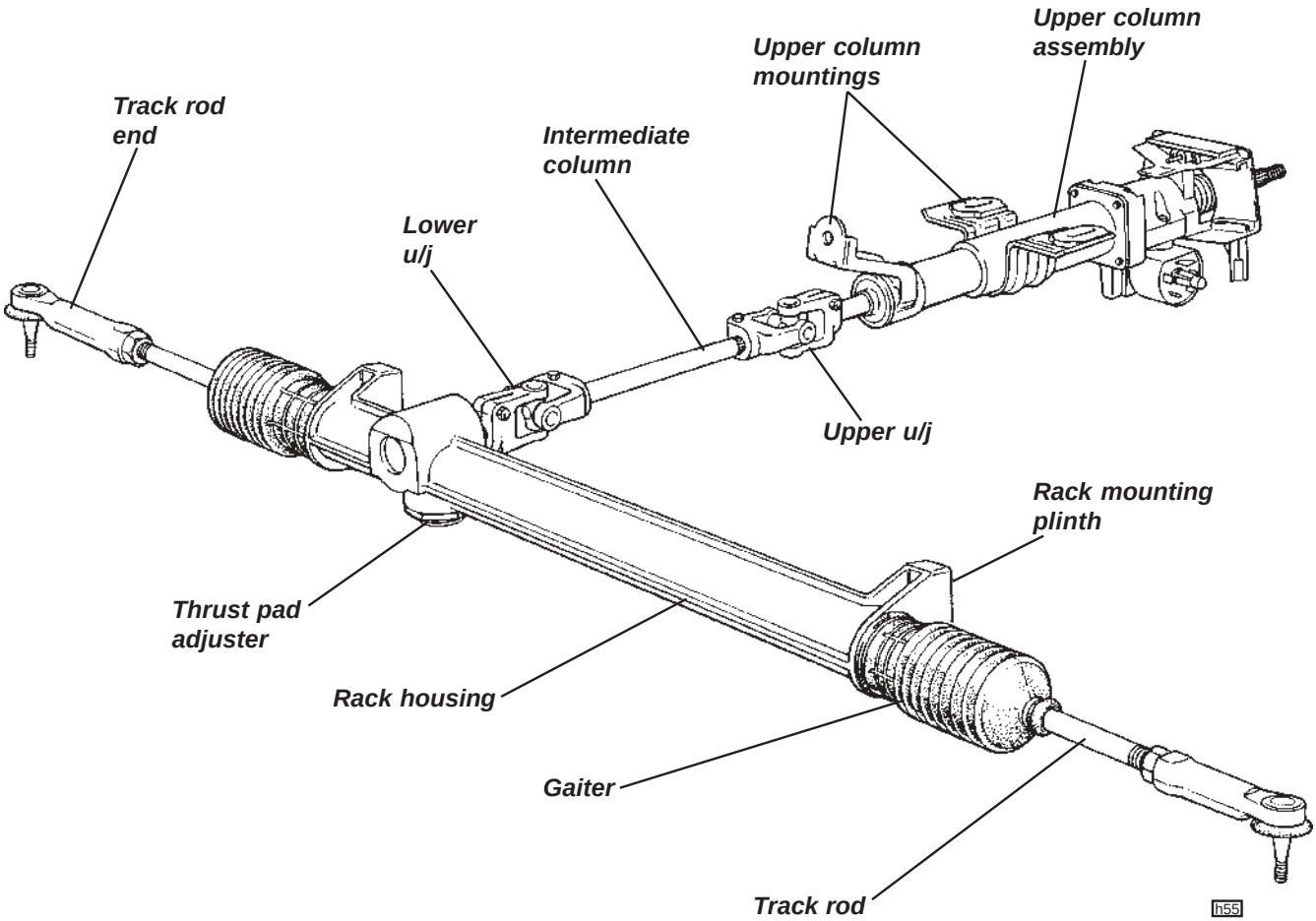

HG.1 - GENERAL DESCRIPTION

The steering system of the Elise comprises a telescopically collapsible upper column assembly, connecting to a rigidly mounted rack and pinion assembly via a universally jointed intermediate shaft. The steering rack tie rods connect to rearward facing steering arms bolted to the forged steel front hub carriers, with geometry providing 30% Ackermann effect, and a toe-out on bump characteristic. No power assistance is provided. Prior to June '04, the steering rack assembly used a one-piece, alloy, pinion/rack housing, superseded after that time by a cast alloy pinion housing mated to a tubular steel rack housing.

The upper column is fixed to the scuttle beam, with the column upper bearing carrier also providing mountings for the steering lock and column switches. 'Break out' inserts fitted in the column upper mounting flanges, allow for telescoping of the column in a frontal collision. The steering rack assembly, which provides 2.4 turns from lock to lock at a 15.8:1 ratio, is rigidly mounted inside a chassis transverse extrusion behind the top wishbone rear pivots.

HG.2 - STEERING WHEEL

Non Airbag Type: The alloy three spoke steering wheel, has a leather trimmed rim and moulded rubber covered spokes, and is secured to the column via a 36 spline boss. The horn button is mounted in the steering wheel centre pad which is supported by a collapsible steel spider bolted to the hub of the wheel. The positive feed to the horn button is supplied via a spring loaded contact housed in the column switch carrier, and a slip ring mounted on the forward side of the wheel. The earth contact of the button is connected to a terminal on the spider.

Airbag Type: The alloy three spoke steering wheel has a leather trimmed rim and moulded rubber covered spokes which incorporate horn buttons in the outer ends of each of the nominally horizontal spokes. An airbag

Downloaded from www.Manualslib.com manuals search engine

module is incorporated in the centre of the wheel, and uses a rotary coil unit to maintain cable continuity to the airbag and horn buttons.

To Remove Steering Wheel (non airbag type)

1. Pull off the centre trim pad with horn button, and disconnect the two horn leads.

2. To allow access for a steering wheel puller tool, it is necessary first to remove the column shroud:
- Release the four screws securing the shroud upper section, turning the steering wheel as necessary to permit access.
- Pull out the grommet from around the ignition switch, and remove the three screws securing the lower shroud.
- If necessary, disconnect or remove the trip/panel lights control button from the lower shroud.

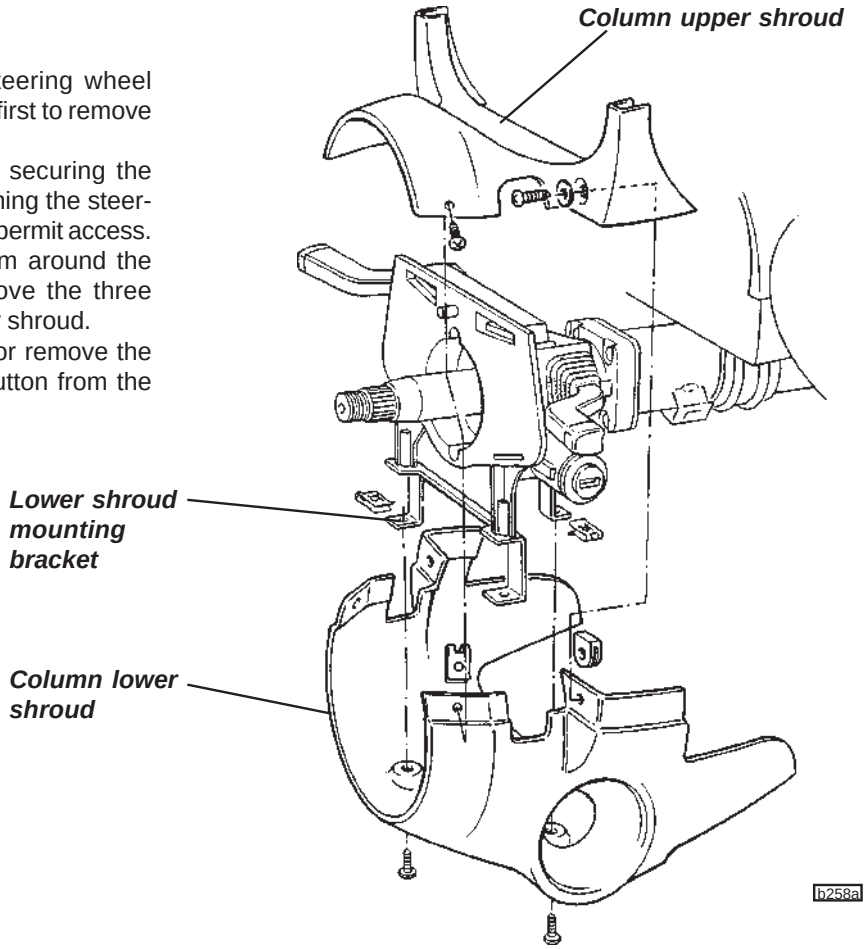

3. Remove the nut securing the steering wheel boss to the column. Match mark the boss and column to enable alignment to be maintained on re-assembly.

4. Use a suitable steering wheel puller tool to locate behind the steering wheel boss and bear against the end of the column.
CAUTION: If excessive force is applied to either the wheel or column without an appropriate puller, the telescoping mechanism of the outer column may be overridden, necessitating column replacement.

5. If necessary, unclip the slip ring from the steering wheel boss and withdraw with the horn lead. Withdraw the column bearing preload spring.

6. To refit the steering wheel, reverse the above procedure with the following notes:
- Clip the horn slip ring to the steering wheel boss with the turn indicator cancelling vane on the left hand side.
- Ensure that the column bearing preload spring is fitted over the inner column before fitting the wheel with the match marks aligned. If re-alignment is necessary, see later.
- Torque tighten the steering wheel to column nut to 25 Nm.

Downloaded from www.Manualslib.com manuals search engine

To Remove Steering Wheel (airbag type)

WARNING: The driver's airbag is housed in the hub of the steering wheel. Precautions need to be taken for personal safety when working with airbags and associated componentry. Do not attempt to remove the airbag or steering wheel without first referring to section WD.

On the back of the airbag type steering wheel hub, is mounted a 'rotary connector', being a device which allows the steering wheel to turn whilst maintaining electrical continuity to the airbag module and horn buttons. This device needs to be centralised before fitting, or breakage will result. Follow instructions below carefully.

1. Column shrouds: Remove the two screws retaining the top part of the shroud, and the four screws retaining the lower part, and withdraw both parts from the column, if necessary disconnecting the trip/ panel lights control button from the lower shroud.

2. Refer to section WD to remove the airbag module from the wheel.

3. Disconnect the horn harness plug.

4. The steering wheel may be released from the hub by removing the four attaching screws.

5. To remove the hub, or wheel and hub assembly from the column, first ensure the front wheels are pointing straight ahead. Bend back the locking tabs and release the nut securing the hub to the column. Before attempting to remove the hub, match mark the position of the hub against the column to aid re-assembly.

6. Using a suitable steering wheel puller tool, position the legs to reach through the holes in the wheel hub and bear directly against the hub, without intefering with the rotary connector on the back of the hub. The centre screw should bear against the end of the column. Withdraw the wheel/hub/rotary connector assembly from the column splines.
   Alternatively, for better puller access, the steering wheel can first be removed from the hub by releasing the four retaining screws.
   CAUTION: If excessive force is applied to either the wheel/hub or column without an appropriate puller, the telescoping mechanism of the outer column may be overridden, necessitating column replacement.

   Refitment
7. If the hub is already fitted to the column, refit the steering wheel to the hub and tighten the four fixing screws. Mate the horn buttons harness connector plug.

8. If fitting the wheel/hub/rotary connector assembly to the column, the rotary connector must first be centralised: Turn the connector centre element fully counterclockwise until tight, then turn clockwise approximately 2.5 turns until the arrow marks on the two parts of the rotary connector are aligned. Make sure the front wheels are pointing straight ahead, and fit the assembly onto the column with the hub to column match marks (made on disassembly) aligned, and engage the spring loaded pin on the column switch housing with the slot in the rotary connector.

9. Fit a new locking tab washer, followed by the steering wheel nut, and torque tighten to 25 Nm (18.5 lbf.ft). Bend up the locking tabs to secure.

10. Refer to section WD to refit the airbag module, and verify the system.

Steering Wheel Alignment

Ideally, the steering wheel should align in the straight running position, with the steering rack centralised and with equal track rod lengths. In practice, a minor compromise to track rod lengths may have to be made. To arrive at the optimum setting, proceed as follows:

Note that only one splined joint in the steering system allows a choice of position, this being the lower joint to rack pinion shaft.

1. Set the front wheel alignment to specification with equal track rod lengths (see sub-section CI.2).

Downloaded from www.Manualslib.com manuals search engine

2. Turn the steering to each full lock in turn and set the steering wheel on the column splines such that its orientation in one full lock position is the nearest possible mirror image of its position at the opposite full lock.

Mirror image wheel positions

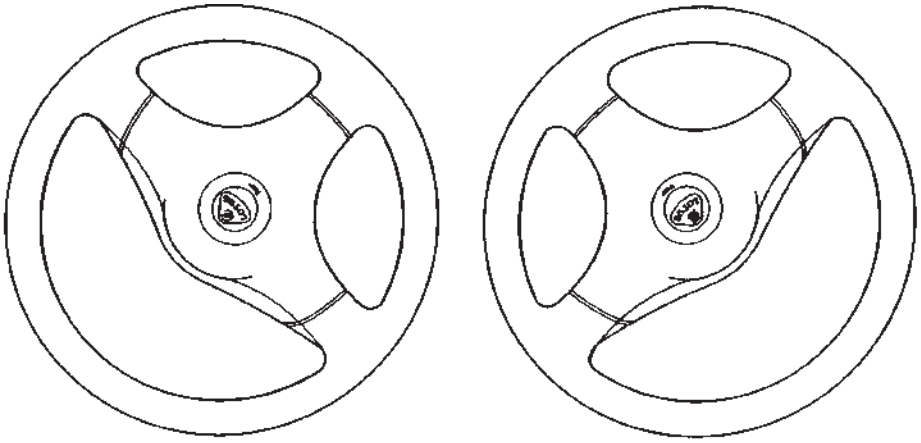

h53

3. Secure the steering wheel before road testing the car and marking the actual 'straight ahead' position of the steering wheel which should deviate from the ideal position by less than 5°. Final alignment is achieved by asymmetric adjustment of the track rods, retaining the overall toe-out setting.

HG.3 - UPPER COLUMN ASSEMBLY

Non-airbag steering wheel shown

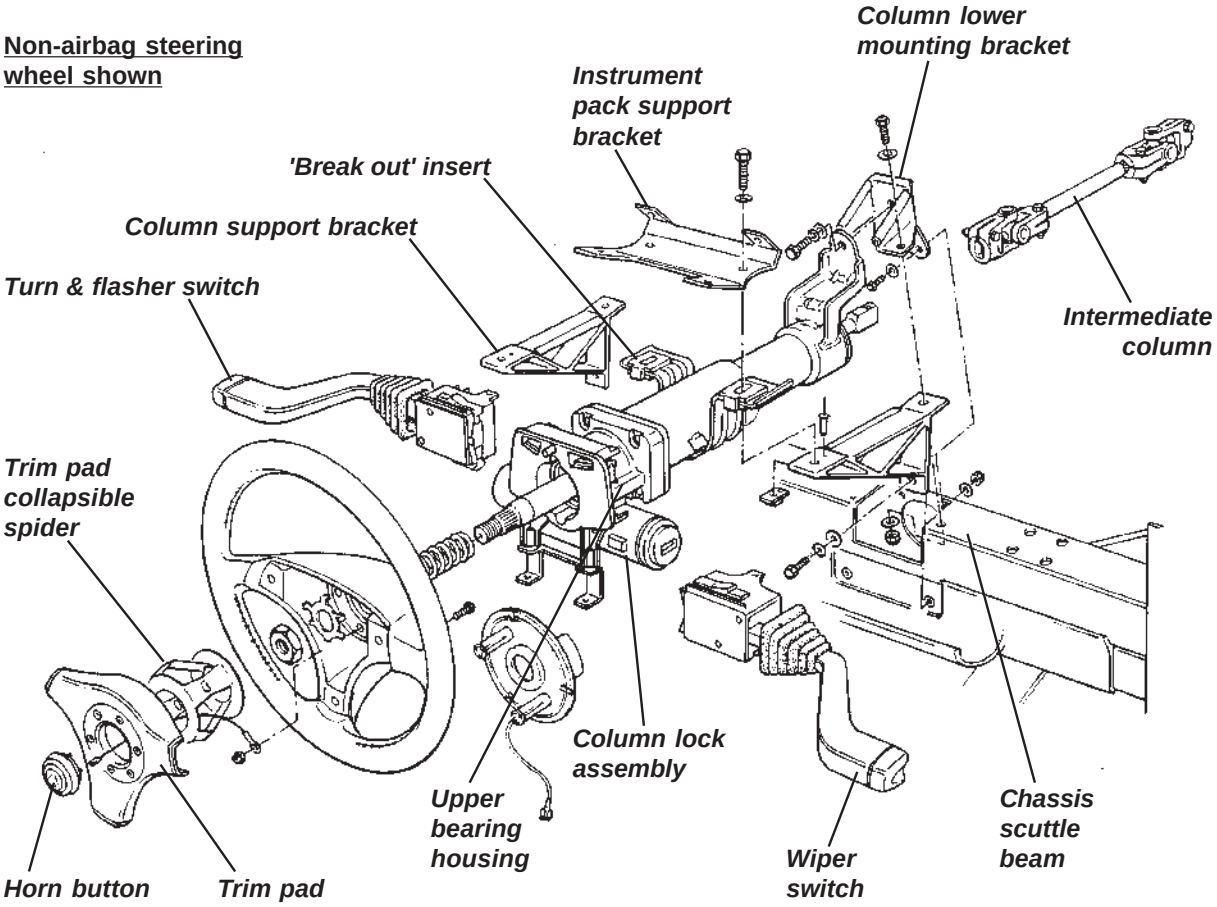

h49a

Downloaded from www.Manualslib.com manuals search engine

The upper steering column assembly comprises an inner column which connects the steering wheel to the intermediate shaft, and a tubular steel outer column which, with its alloy upper bearing housing, supports the inner column and carries the column lever switches for lighting and wiper control, and also the ignition switch/steering lock.

Both inner and outer columns are of fixed length, but are telescopically collapsible when subjected to crash forces. The two parts of the inner column are fixed together by plastic pins designed to shear and allow telescoping to occur beyond a specified axial load. The two part outer column tube uses gripper rings to retain the column length, with the lower part mounted by a single fixing to the chassis scuttle beam via a three point fixing steel bracket. The upper part of the outer column has two open slotted mounting flanges each of which is fitted with a 'break out' alloy insert, bolted through to an extruded alloy plinth fixed to the scuttle beam. In the event of an extreme axial load being applied to the column via the steering wheel, as may occur during a vehicle frontal collision, the plastic retaining pins in the column flange inserts will shear and allow the upper part of the column to break free of the upper fixings and telescope forwards, reducing the potential for column induced injury.

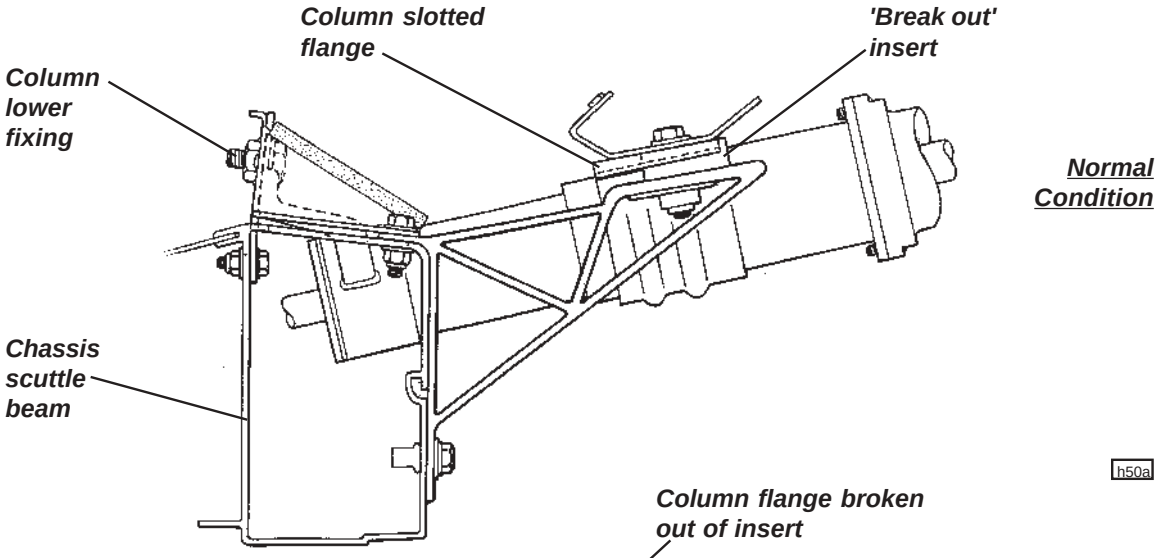

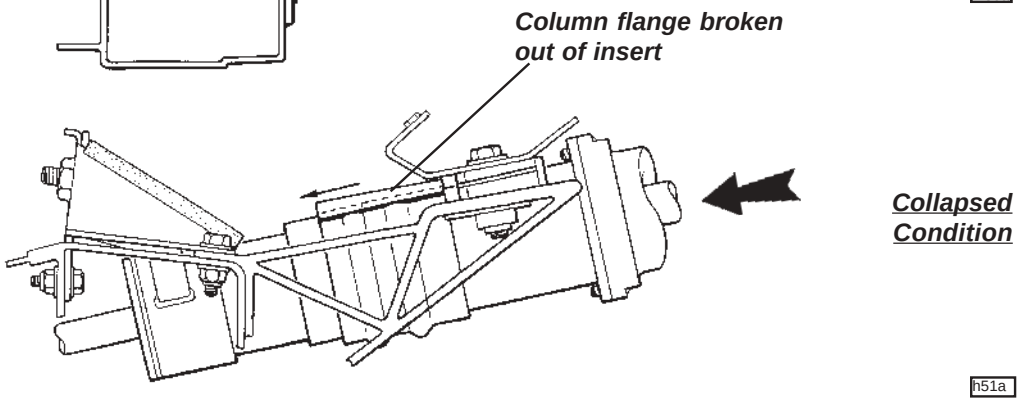

Dimensional Check

If the vehicle is involved in an accident, or any part of the column is subjected to an abnormal load including airbag deployment, the column should be carefully examined to establish if any telescoping has occurred. Perform the following checks, and replace the complete upper column assembly if any of the dimensions are outside specification:

1. Outer Column:
   Measure the length of the lower part of the outer column as shown:
   Specification = 80 ± 1mm

2. Inner Column Lower:
   Measure the length of the exposed part of the inner column as shown:
   Specification = 58 ± 1mm

Downloaded from www.Manualslib.com manuals search engine

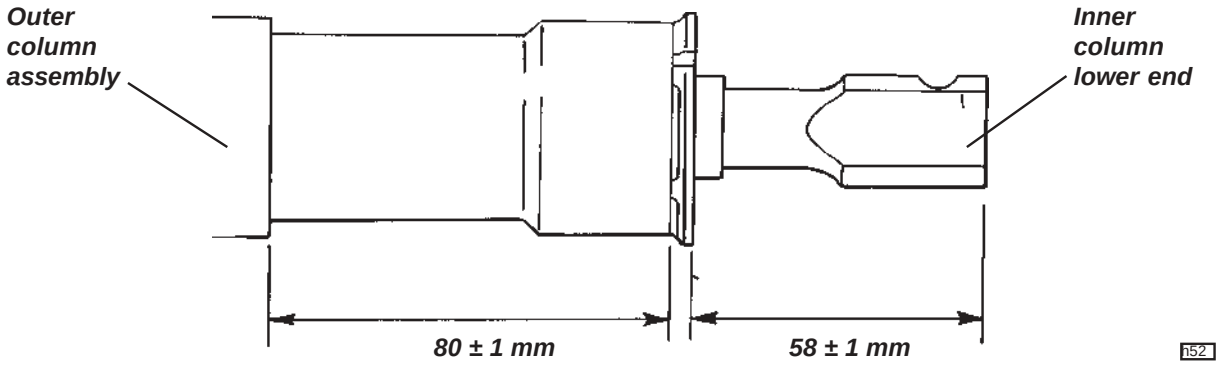

3. Inner Column Upper
With the steering wheel removed, measure the length of the exposed part of the upper column as shown:
Specification = 76 ± 1mm

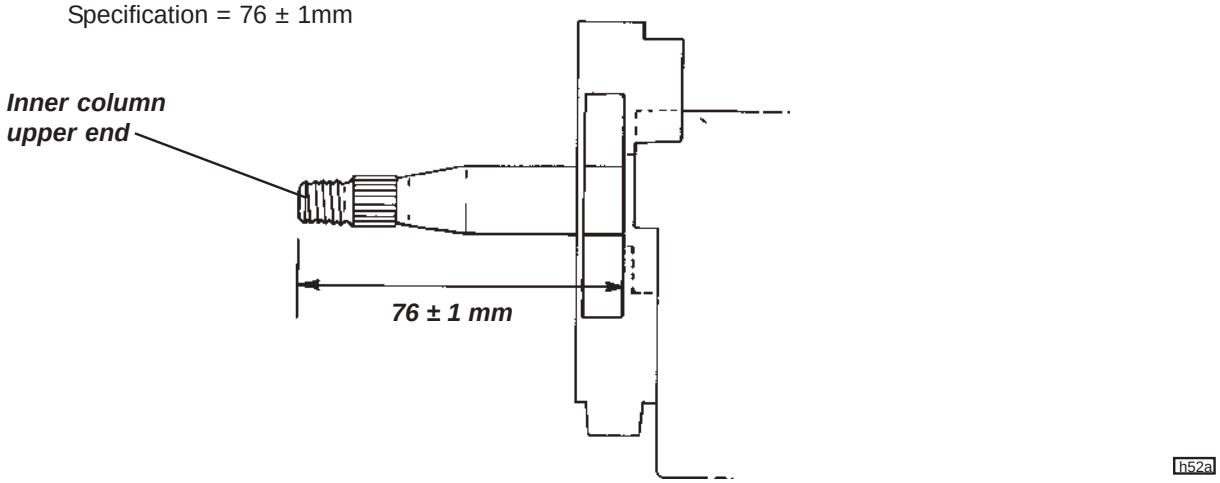

4. 'Break out' Inserts
Remove the column shrouds and the column flange fixing bolts, and check that each of the alloy 'break out' inserts is securely attached to the column flange. If the plastic pins are sheared, the column assembly must be replaced.

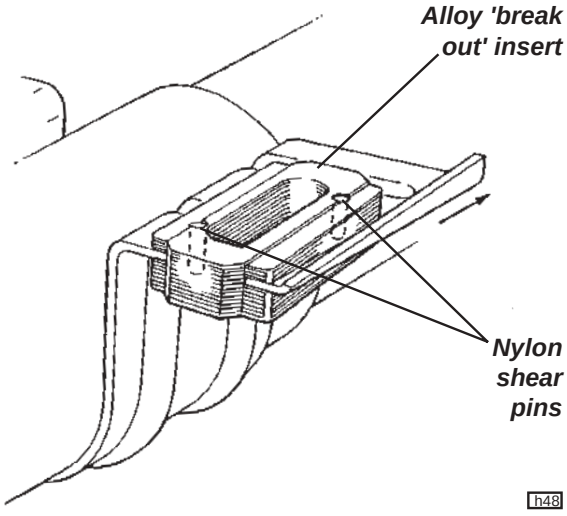

Downloaded from www.Manualslib.com manuals search engine

To Remove Upper Steering Column Assembly

WARNING: On cars so equipped, the driver's airbag is housed in the hub of the steering wheel. Precautions need to be taken for personal safety when working with airbags and associated componentry. Do not attempt to remove the airbag, steering wheel or column without first referring to section WD.

1. Disconnect the battery, and remove the column shrouds (see sub-section HG.2).

2. Disconnect the column lever switches, or release the retaining pawls and slide the switches out of the carrier. Disconnect the horn contact pin. On airbag equipped cars, refer to section WD and unplug the yellow airbag harness connector.

3. To disconnect the ignition switch: prise open the terminal cover, and use a small screwdriver to release the retaining barb located between the white and yellow cables. Withdraw the connector.

4. If necessary, remove the steering lock/ignition key barrel: Turn the key to position 'I', depress the spring pin accessible via a hole in the column switch carrier, and withdraw the lock barrel.

5. If necessary, remove the ignition switch: First remove the steering lock/ignition key barrel (see above). Remove the retaining grub screw and withdraw the switch.

6. If necessary, remove the steering lock assembly: Remove the spline head screw securing the column switch carrier, and drill or chisel out the two shear head bolts fixing the lock assembly to the column.

7. Remove the pinch bolt securing the upper universal joint to the intermediate column.

8. On non-airbag cars, remove the two fixings for the instrument pack mounting brackets, and remove the instrument pack and cowl assembly after unplugging the single harness connector.
   On airbag equipped cars, withdraw the instrument surround and cowl straight rearwards from the dash panel to release the spring clips. Remove four screws to release the instrument pack mounting bracket from the dash and unplug the two harness connectors

9. Release the two bolts securing the upper column clamp to the dash brackets, and remove the switch pack.

10. From the access provided by the removal of the switch pack, release the upper column single lower fixing and withdraw the column assembly from the scuttle and off the intermediate steering column.

Non-airbag type shown

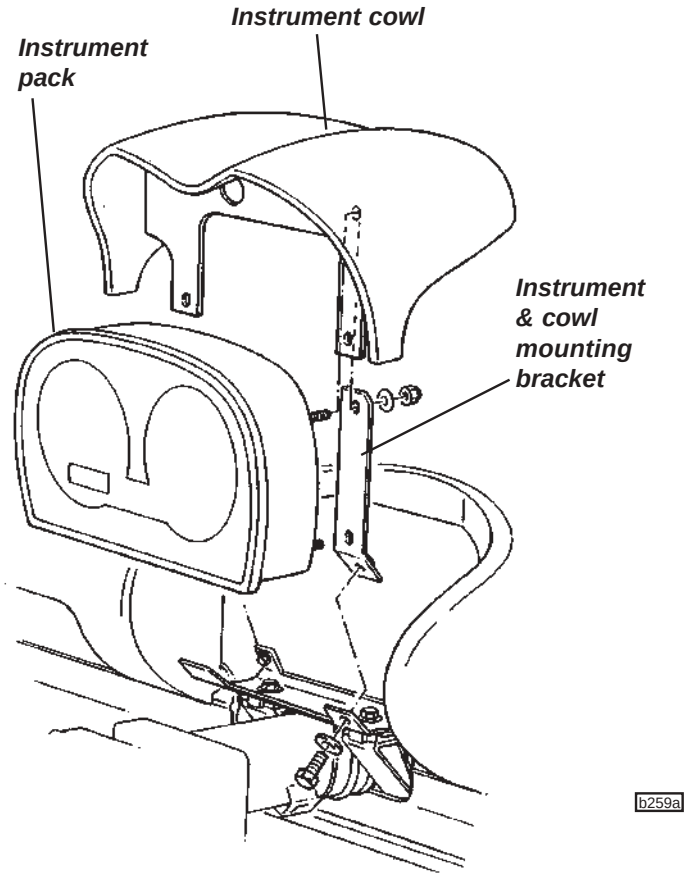

Downloaded from www.Manualslib.com manuals search engine

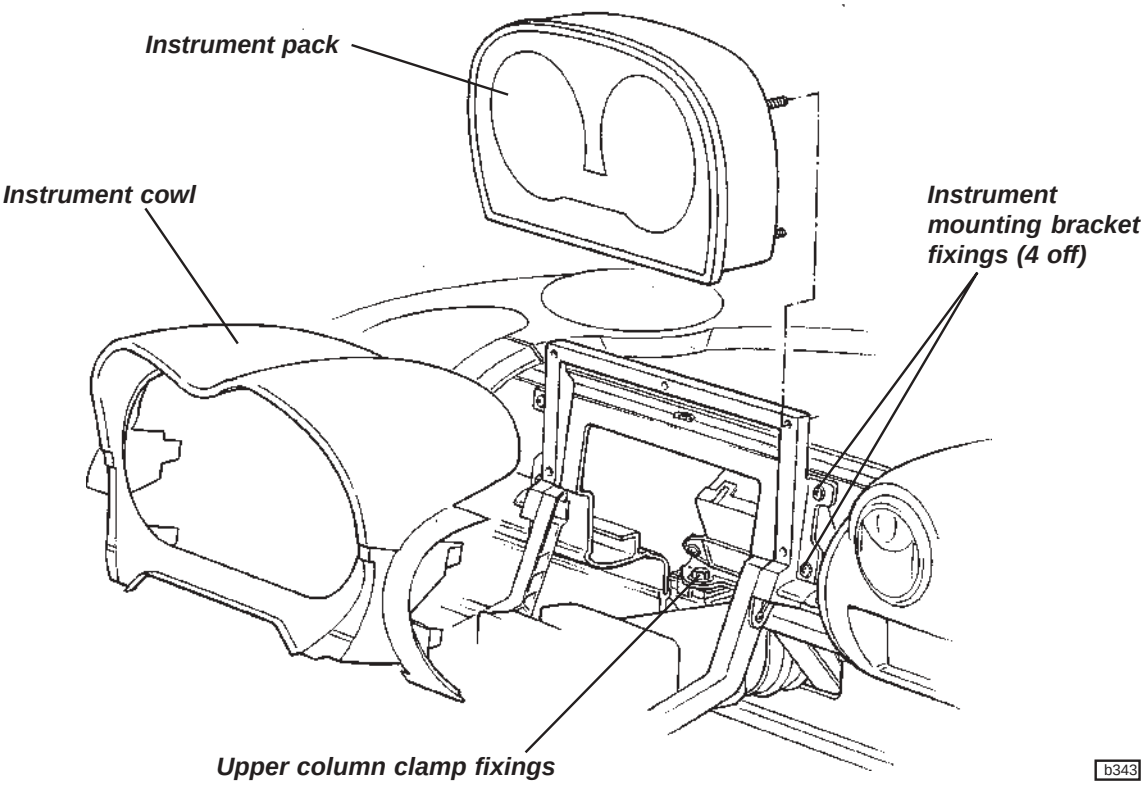

11. Refit the column in reverse order to removal with the following notes:
- The groove for the pinch bolt allows assembly of the universal joint to the intermediate column in only one orientation. Torque tighten the pinch bolt to 35 Nm.
- Torque tighten the column lower fixing bolt to 45 Nm
- Torque tighten the two column upper fixing bolts to 22.5 Nm.
- If applicable, use new shear bolts to secure the steering lock assembly, and tighten until sheared.

HG.4 - INTERMEDIATE COLUMN

The intermediate steering column consists of a symmetrical splined shaft and two different Hookes type universal joints. The lower joint uses an un-indexed 36 spline connection to the steering rack pinion shaft, and the upper joint accommodates a double flatted boss on the end of the upper column, with a pinch bolt groove allowing assembly in only one orientation. The intermediate shaft itself, uses a splined joint at each end and an indexed pinch bolt groove.

To remove the intermediate column assembly, the upper column must first be removed (see sub-section HG.3), after which the rack pinion shaft pinch bolt may be removed and the column assembly withdrawn. Match marking the lower u/j to the pinion shaft will aid steering wheel alignment on re-assembly. Torque tighten the pinch bolts to 35 Nm.

HG.5 - TRACK ROD ENDS & RACK GAITERS

Front Wheel Alignment

Alignment is measured either by the angle a wheel makes with the vehicle centre line, or the difference in dimension between the wheel rim to wheel rim measurement at the front and rear of the wheel at hub centre height. The wheels are said to 'toe-in' when the wheel paths converge ahead of the vehicle, and 'toe-out' when they diverge. Wheel alignment is designed to vary with both steering angle (Ackermann) and suspension travel (bump steer) and should be measured only 'straight ahead' at the specified ride height.

Downloaded from www.Manualslib.com manuals search engine

Provision is made for the adjustment of front wheel alignment at the joint between the steering rack track (tie) rods, and the outer ball joints ('track rod ends'). The required ride height and alignment specification is detailed in sub-section CI.2.

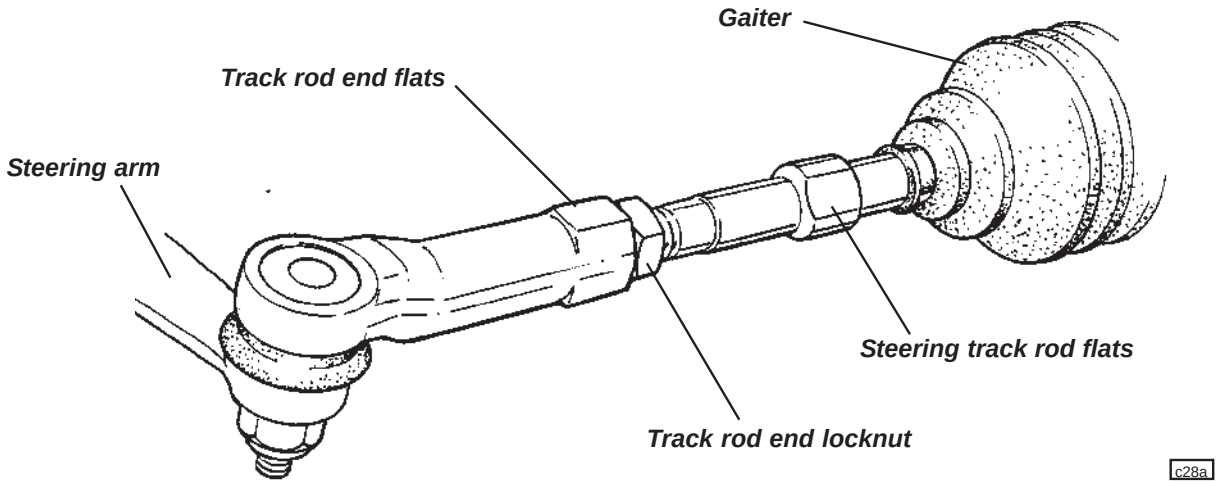

Note that in order to preserve the required bump steer characteristic and steering symmetry, the effective length of each track rod must remain equal - adjust each track rod by a similar amount:

- Hold the track rod end using the flats provided, and slacken the locknut. Repeat for the opposite side.
- Turn each track rod a similar amount. As a guide, turning both track rods by one quarter of a turn will alter overall toe-out by approx. 2.0 mm.
- When adjustment is correct, hold each track rod end and tighten the locknuts to 45 Nm (33 lbf.ft).

When slackening or tightening the track rod end locknuts, it is important that the torque reaction is resisted using the track rod end flats, and that the ball joint itself is not allowed to be stressed.

Track Rod Ends

The track rod ends are sealed for life and maintenance free, but if replacement is required; remove the ball pin nut and use a ball joint splitter tool to separate the joint from the steering arm. Unscrew the joint from the track rod. On re-assembly, tighten the ball joint to steering arm nut to 30 Nm, and set the front wheel alignment as detailed in sub-section CI.2.

Steering Rack Gaiters

The convoluted gaiters sealing each end of the steering rack housing to the track rods, should be inspected at service intervals and replaced immediately if found to be torn, cracked or otherwise damaged. The ingress of dirt or water into the rack housing will cause rapid deterioration of the track rod inner ball joints and rack and pinion mechanism.

To replace a gaiter, remove the track rod end (see above), release the gaiter clips, and slide the gaiter off the housing and track rod. Check for consequent damage or wear and replace the steering gear assembly if necessary. Fit the new gaiter into position, and secure with new retaining clips.

HG.6 - RACK & PINION ASSEMBLY REMOVAL/REPLACEMENT

The rack and pinion assembly is mounted inside an extruded chassis box section crossmember at the top front of the footwell. Each of the two rack housing mounting plinths uses an M10 (upper) and M8 (lower) fixing bolt to secure the housing to the vertical rear face of the crossmember. A steel reinforcement channel is bonded to the outside of the crossmember, with a riveted height setting plate to define the vertical position of the housing. Note that the only approved repairs or adjustments to the steering rack assembly are the replacement of the track rod ends and rack housing gaiters, and the adjustment of the rack pressure pad.

Downloaded from www.Manualslib.com manuals search engine

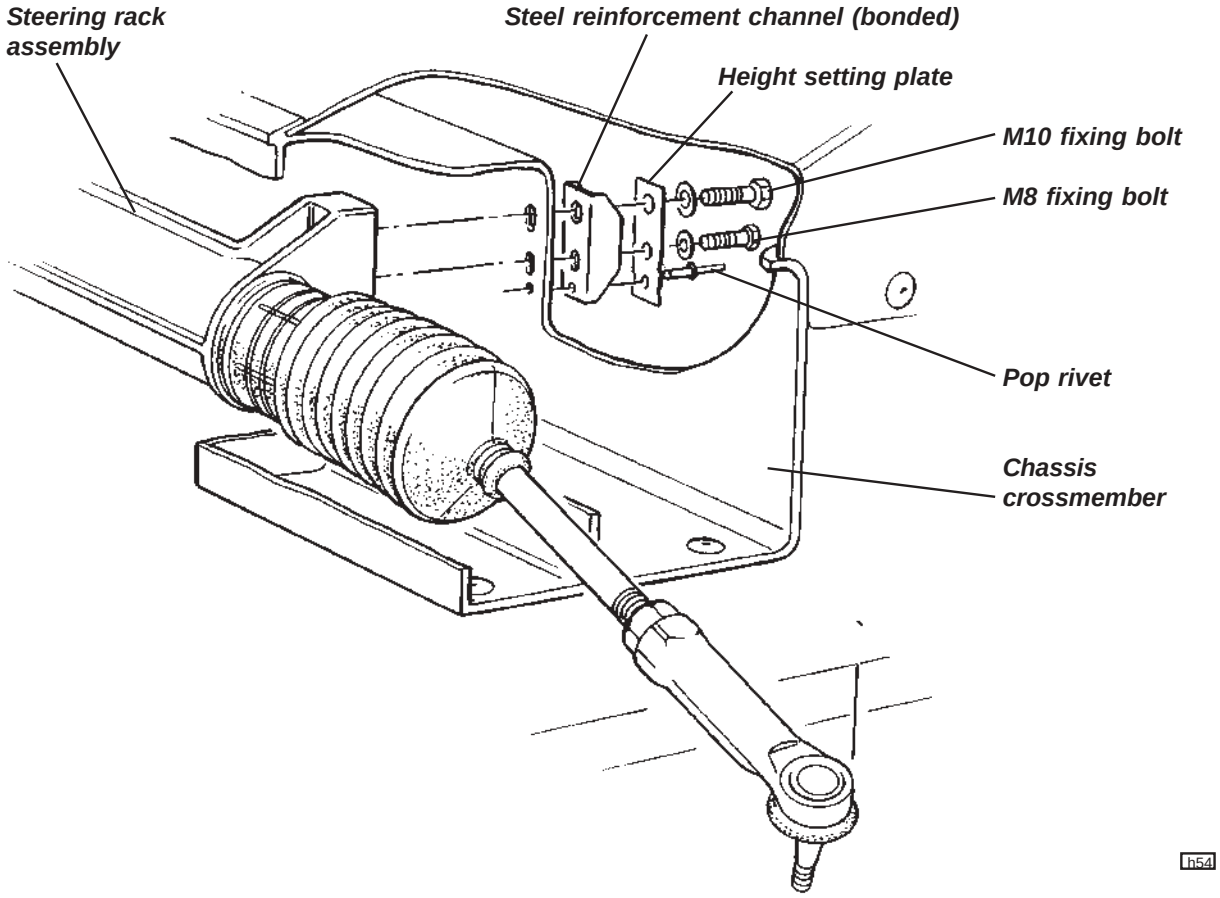

To Remove/Replace Steering Assembly

1. Remove the nut securing each track rod end to the steering arm, and use a ball joint splitter to separate the joint.

2. From inside the footwell, match mark the pinion shaft against the u/j yoke to aid steering wheel alignment on re-assembly, and remove the pinch bolt.

3. From inside the footwell, remove the two M8 and M10 bolts securing the rack housing.

4. Draw the housing forwards to disengage the intermediate shaft u/j, and manoeuvre the assembly out of the chassis crossmember.

5. On re-assembly, check that the correct rack height setting plate is fitted. For the standard ride height of 130/130 or 135/135, the '6 notch' plate A111H0017 should be fitted. Fitment of the wrong plate (identified by the number of notches in the vertical edges) will result in an incorrect bump steer characteristic and degraded handling. The plate is secured to the chassis by a single pop rivet.

6. Feed the rack assembly into the chassis crossmember and engage the pinion shaft into the lower u/j with the match marks aligned. If a new assembly is being fitted, follow the 'Steering Wheel Alignment' procedure in sub-section HG.2.

7. New fixing bolts for the steering rack housing are precoated with thread locking compound. If existing bolts are to be re-used, wire brush the threads before re-applying a suitable thread locking compound and torque tightening the M8 bolts to 22.5 Nm, and the M10 bolts to 45 Nm.

Downloaded from www.Manualslib.com manuals search engine

8. Fit the lower u/j pinch bolt, and tighten to 35 Nm.

9. Fit the track rod ends into the steering arms, and tighten the nuts to 30 Nm.

10. Check and adjust the front wheel alignment as detailed in sub-section CI.2.

HG.7 - ADJUSTMENT OF RACK BAR THRUST PAD

The following information applies to one-piece alloy bodied steering rack units:

A thrust pad backed by a pair of belleville washers, is used to control the preload between the rack bar teeth and the pinion gear, and is adjustable via a threaded backstop plug. The correct preload allows the horizontally mounted rack bar (column disconnected) to be pulled through its full travel by a steady force of 50 - 70 N (12 - 16 lbf). The rack and pinion assembly must be removed from the chassis before any adjustment may be carried out.

To adjust the thrust pad, release the locknut (36mm socket) and use a 5.5mm hexagonal bit to adjust the backstop as required before tightening the locknut. For an approximate initial setting, screw in the backstop plug until solid, then back off ½ turn.

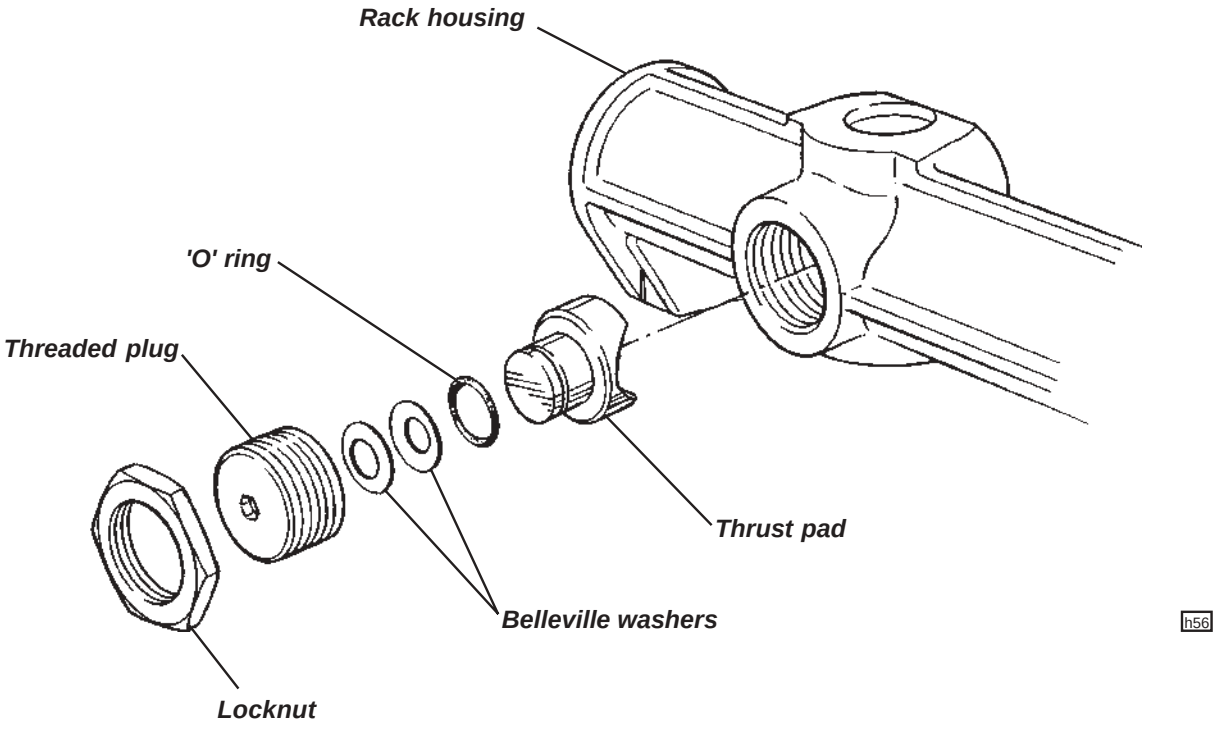

The following information applies to alloy/steel tube type steering rack units:

A thrust pad backed by a coil spring, is used to control the preload between the rack bar teeth and the pinion gear, and is adjustable via a threaded backstop plug. The correct preload allows the horizontally mounted rack bar (column disconnected) to be pulled through its full travel by a steady force of 50 - 100 N (12 - 20 lbf). The rack and pinion assembly must be removed from the chassis before any adjustment may be carried out.

To adjust the thrust pad, release the locknut (36mm socket) and use a 19mm hexagonal bit to adjust the backstop as required before tightening the locknut. For an approximate initial setting, screw in the backstop plug until solid, then back off ¼ turn.

Downloaded from www.Manualslib.com manuals search engine

Exploded View

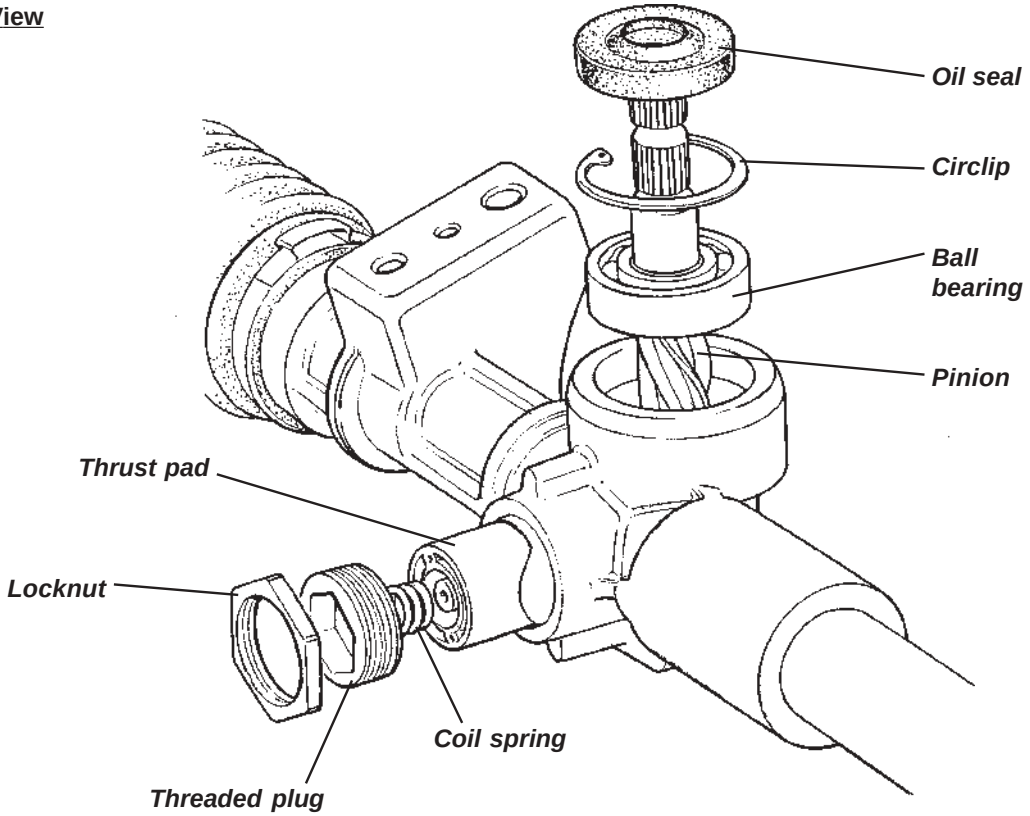

h59

Sectional View

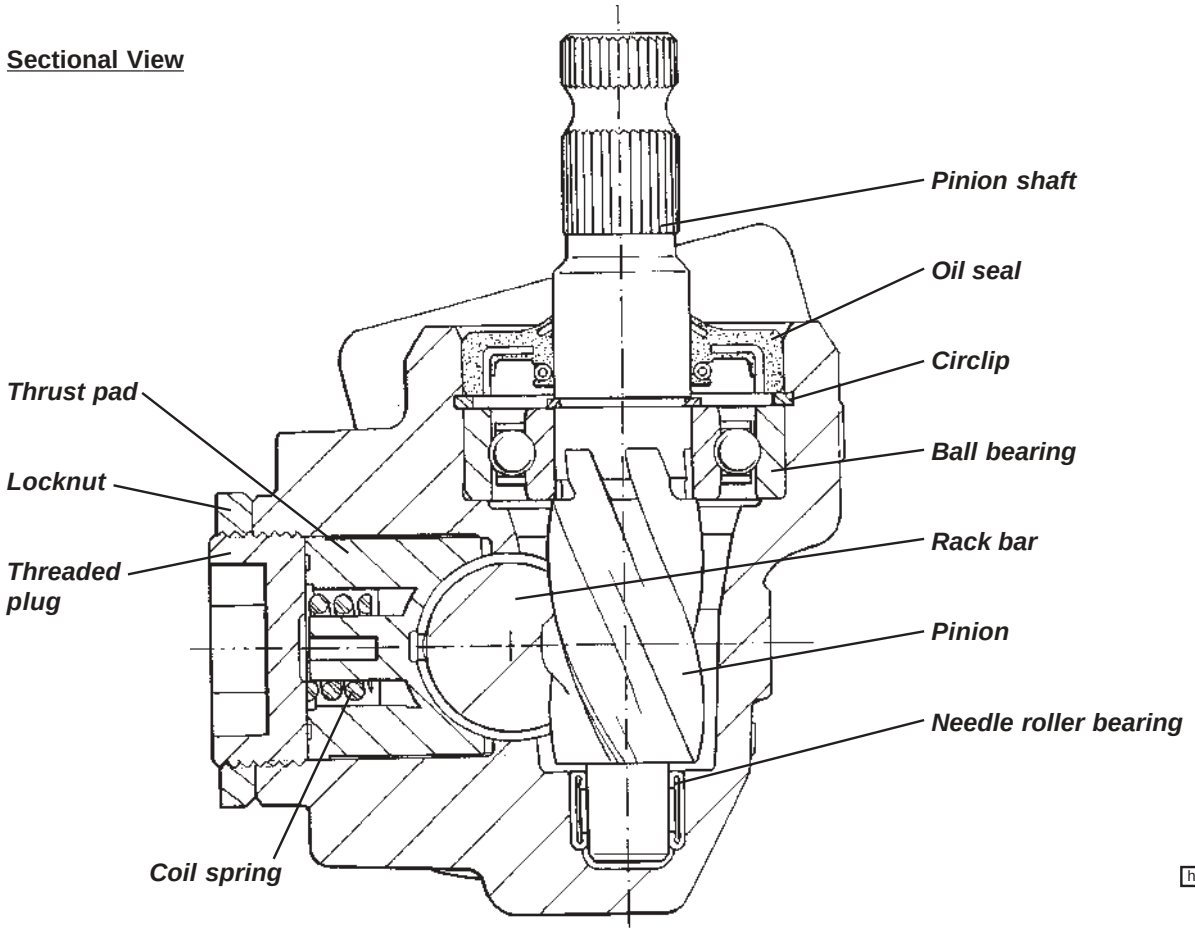

h60

Downloaded from www.Manualslib.com manuals search engine

BRAKING SYSTEM

SECTION JJ

	Sub-Section	Page
General Description	JJ.1	3
Tell Tale Lamps	JJ.2	4
Brake Fluid Check & Change	JJ.3	4
Front Brake Pad Replacement	JJ.4	5
Rear Brake Pad Replacement	JJ.5	6
Parking Brake Adjustment	JJ.6	9
Brake Discs	JJ.7	11
Brake Callipers	JJ.8	12
'08 M.Y. Upgrade Option	JJ.8A	12a
Brake Master Cylinder	JJ.9	13
Vacuum Servo	JJ.10	14
Pedal Box	JJ.11	19
ABS Theory of Operation	JJ.12	21
ABS Electro-Hydraulic Unit	JJ.13	28
Wheel Speed Sensors	JJ.14	29
Data Link Connector (DLC)	JJ.15	29
Special Tools	JJ.16	30
'Lotus Scan' Checking Procedures	JJ.17	32

Downloaded from www.Manualslib.com manuals search engine

GENERAL LAYOUT

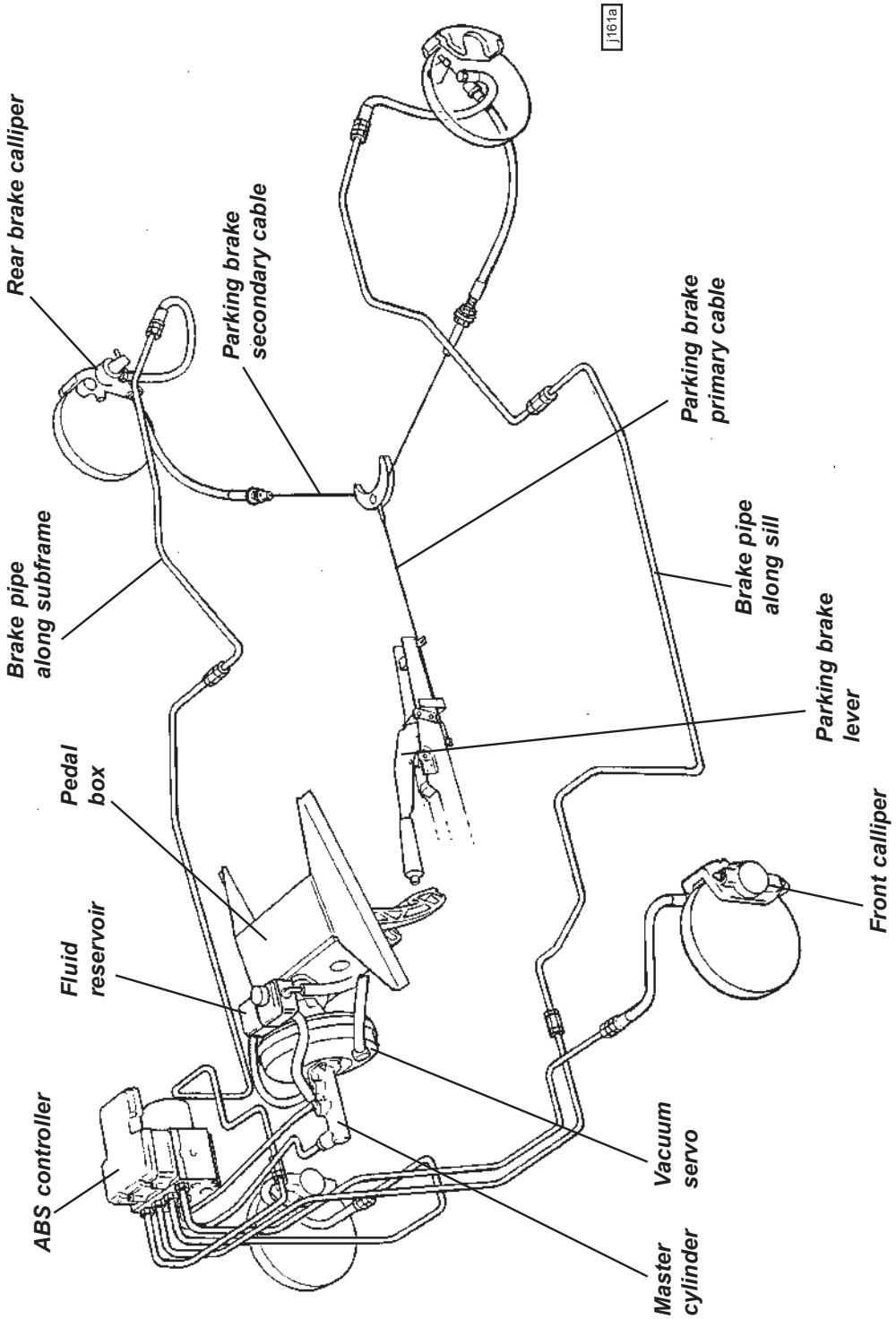

Downloaded from www.Manualslib.com manuals search engine

JJ.1 - GENERAL DESCRIPTION

The Lotus Elise, when fitted with anti-lock brakes, comprises ventilated discs all round with AP Racing 2-piston fixed callipers on the front and Brembo single piston sliding callipers on the rear. A tandem master cylinder, with vacuum servo assistance, operates the callipers via a front/rear split hydraulic circuit with anti-lock control by a Kelsey-Hayes microprocessor based system. The centrally mounted parking brake lever, operates the rear calliper pistons by control cables.

The AP Racing front callipers, have lightweight alloy bodies housing two opposed pistons, and are mounted via two bolts directly to the rear of the forged steel hub carriers. The rear brakes use Brembo cast iron, single piston callipers, sliding on pins mounted directly to the forged steel hub carriers. A ventilated cast iron brake disc with curved internal vanes and cross drilling is common to all four wheels, and is sandwiched between the road wheels and hubs, retained for convenience by a single countersunk screw.

The tandem master cylinder is made by FTE, and incorporates a front section to supply both front brakes, and a rear section to supply the rear brakes. A translucent fluid reservoir is mounted on a bracket above the master cylinder, and has separate compartments connected to the front and rear cylinder sections by flexible hose. A third hose connects the rear reservoir compartment with the clutch master cylinder to supply that system's needs. A fluid level sensor in the filler cap will light a fascia tell tale lamp if the level becomes dangerously low.

The parking brake ratchet lever is mounted between the seats and uses a short primary cable and balancing yoke to actuate a single control cable linked to each rear calliper. Adjustment of the calliper mechanism to compensate for brake pad wear is automatic. The parking brake should be applied by pulling up the lever with high effort, and engaging the highest ratchet setting attainable. When parking the car on a slope, the additional precaution should be taken of leaving the transmission in first or reverse gear and steering the wheels towards the kerb. If the parking brake is applied when the brakes are hot (e.g. after prolonged or vigorous braking), special care should be taken to ensure that the parking brake is securely engaged in order to allow for any potential affect on brake performance as the discs cool.

The braking system is designed to enhance brake performance during high speed driving, with good fade and pad wear characteristics, and have a higher friction level when heated to normal working temperature than when cold. Required pedal effort will reduce as cold brakes become heated to normal working temperature, and the braking efficiency will increase significantly as new discs or pads become 'bedded in'. After fitting new brake components, maximum braking efficiency will be achieved if, for the first few hundred miles, needless heavy braking is avoided, and the brake pads are allowed to 'bed in' fully before being used to their full potential.

A Kelsey-Hayes Antilock Brake System (ABS) is used to optimise brake performance in extreme conditions and reduce the tendency of any wheel to lock up. Under most conditions, the maximum braking force is provided by a wheel which is rotating at about 90% of road speed. Apart from the likelihood of increasing the stopping distance, a locked wheel provides no steering force, such that with both front wheels locked, movement of the steering wheel has no effect on vehicle direction. With the antilock system, even panic braking results in controlled deceleration and the retention of steering response and is especially advantageous when braking on slippery road surfaces and in bad driving conditions. The ABS control system is self monitoring and has the capability of switching itself off if a fault is detected, allowing the base brake system to operate without anti-lock control.

Under normal circumstances, the hydraulic power brake system of the vehicle operates without input from the ABS, with brake pressures governed by the force applied to the brake pedal. The ABS microprocessor receives signals from wheel speed sensors at each of the four wheel hubs, and interprets this data to determine if any wheel is tending to lock up. If imminent lock up is determined, the microprocessor commands solenoid valves in an electro-hydraulic unit to reduce the pressure in that particular brake circuit in order to restore wheel speed to that providing the maximum braking force consistent with continued wheel rotation.

When the ABS is operating, indication to the driver is provided by a 'pulsing' sensation felt at the brake pedal as fluid is pumped between the master cylinder and hydraulic control unit, and also by audible clicking of the relays and switches. These signals indicate to the driver that maximum retardation is being approached, and that driving style should be modified to suit the conditions. The minimum stopping distance is achieved by applying the brakes firmly and steadily, and allowing the ABS to modulate hydraulic pressure. The driver should not attempt to emulate this process by ‘pumping’ the brake pedal, as modulation at the pedal will treat all four wheels similarly, rather than the individual wheel control allowed by the electronics.

During ABS operation, the wheels may appear to lock momentarily as the wheel speed changes rapidly, and some tyre noise (intermittent screeching) may be heard. This noise is normal and will vary with road and

Downloaded from www.Manualslib.com manuals search engine

tyre conditions. However, a wheel that completely locks and stays locked for more than one or two seconds is not normal, and indicates that the vehicle should be serviced as soon as possible. The ABS cannot operate properly if the base brake system is faulty, and will also be affected by dragging brakes, faulty wheel bearings or other related faults.

The ABS controller constantly monitors the anti-lock system for faults, and lights a fascia tell tale if a problem is detected. Information stored in the computer's memory may be accessed via a hand held electronic scanner, in order to facilitate diagnosis of system faults (see later).

JJ.2 - TELL TALE LAMPS

Two tell tale lamps are provided in the instrument cluster to warn of problems in the brake system.

Brakes Tell Tale

As a bulb check function, this tell tale will glow red for about six seconds after ignition switch on, and then go out unless one of the following conditions applies:

i) The parking brake is applied.
ii) The brake fluid level in the master cylinder reservoir is low.

Under normal circumstances, the tell tale should light when the ignition is switched on, and go out when the parking brake is released. If the lamp stays on, or comes on whilst driving, the car should be stopped immediately, as this may be an indication of low brake fluid level caused by a hydraulic leak. A button on the reservoir cap allows the tell tale circuit to be tested.

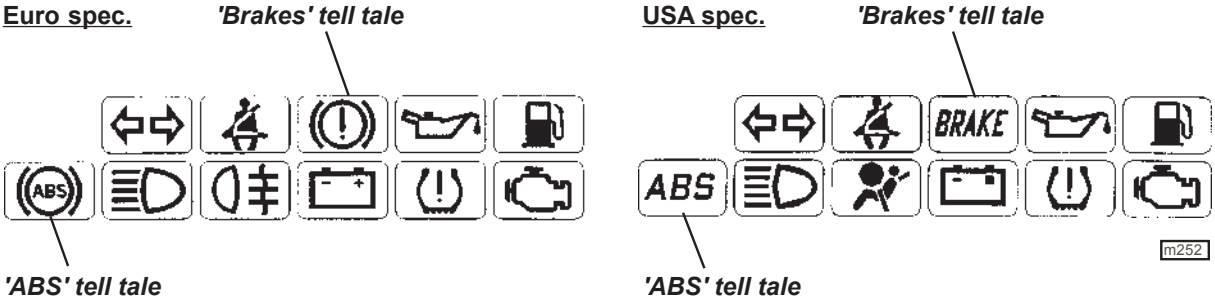

ABS Tell Tale

The ABS tell tale warns the driver of problems in the anti-lock system. The lamp should light for about 6 seconds following ignition switch on, and then go out. If the lamp remains lit, or comes on whilst driving, a fault in the ABS is indicated. The base brake system will continue to operate normally, but without ABS regulation. The car can be driven but should be checked and repaired at the earliest opportunity.

JJ.3 - BRAKE FLUID CHECK & CHANGE

Before checking the brake fluid level, ensure that the car is parked on a level surface, and remove the driver's side front body access panel. The level of fluid in the reservoir may be inspected without disturbing the filler cap, and should be level with the top of the 'MAX' mark moulded on the translucent reservoir body. The level will fall progressively as the brake pads wear in service, and should be checked at each service interval. A sensor incorporated into the filler cap will light a tell tale lamp in the instrument cluster if the level drops significantly. As a bulb check, the tell tale should light for about six seconds when the ignition is first turned on, but may also be tested by pressing the button on the filler cap, which action should light the tell tale with the ignition switched on.

The reservoir is mounted on a bracket over the master cylinder to which it is connected by flexible hoses. An internal baffle divides the reservoir into two compartments, with one section supplying the front brake circuit, and a second section supplying the rear brakes in addition to, via another flexible hose, the clutch master cylinder. Service wear of the clutch friction plate will cause fluid to be displaced from the self adjusting clutch slave cylinder, back to the reservoir, and will counteract to some extent the dropping of the level due to brake pad wear.

Downloaded from www.Manualslib.com manuals search engine

If the reservoir needs topping up, first clean around the cap to reduce the possibility of contamination before unscrewing the cap; it is not necessary to disconnect the level sensor cables. Take suitable precautions to guard against damage to paintwork caused by brake fluid dripping from the level sensor. Use only a fresh supply of DOT 4 ***non-mineral*** type fluid, identified by a yellow and black symbol.

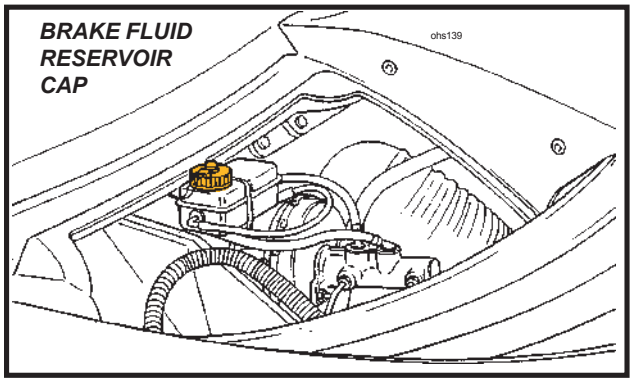

Non-mineral type brake fluid symbol (Yellow & Black)

j146

Do NOT use DOT 5 silicone fluid, or any fluid which has been exposed to the atmosphere for more than a brief period, or any fluid suspected of being wet, dirty or contaminated. Do not overfill. Replace the filler cap securely.

Some service operations, such as replacing brake pads, will result in the displacement of fluid from the hydraulic circuit back into the reservoir. In order to prevent fluid overflowing from the reservoir, it may be necessary to remove some fluid using a syringe.

Renewal of Brake Fluid

Brake fluid absorbs water from the atmosphere over a period of time (hygroscopical), resulting in a lowering of the boiling point of the fluid, and corrosion of the hydraulic system. For optimum safety and brake performance, the brake fluid should be renewed every twelve months (including clutch release system).

Brake Bleeding Procedure

If the brake fluid is to be renewed, or an hydraulic component replaced, the system should be bled of air using the following procedure:

1. Using conventional manual techniques, or low air pressure applied to the reservoir, bleed the system from each calliper bleed nipple in turn until no air bubbles can be seen.
2. Connect the Lotus Scan tool and select ABS and follow the brake bleeding instructions. Whilst this automatic process is taking place (with all 4 calliper nipples open), gently cycle the brake pedal up and down whilst keeping the reservoir topped up, to move any air bubbles displaced from the ABS unit down the hydraulic lines. Finish by closing each nipple with the pedal down.
3. Repeat step (1) to purge each calliper feed line in turn.

JJ.4 - FRONT BRAKE PAD REPLACEMENT

Pad thickness may be checked with the wheel removed without disturbing the calliper.

Standard pad thickness (excluding backplate); 9.0 mm
Minimum pad thickness (excluding backplate); 2.5 mm

If the thickness of any pad is below the specified minimum, the axle set of pads should be renewed. Note that the pad backplates are factory fitted with anti-squeal overlays, and are identified with T 4139 on the backplate.

For cars used on track, where sustained hard use and extreme brake temperatures are likely to occur, 'Motorsport' pads made by Pagid may be fitted in complete vehicle sets under part number A111J0150S (front) and A111J0151S (rear).

1. To remove the brake pads; Remove the 'R' clip from the lower of the two pad retaining pins, and withdraw the lower of the pin taking care to restrain the anti-rattle spring. Remove the second retaining pin together with the anti-rattle spring plate. Withdraw the pads from the calliper. Measure the lining thickness and renew the axle set of pads if any lining is below 2.5 mm.

Downloaded from www.Manualslib.com manuals search engine

2. Before replacing the pads, inspect the calliper for any signs of fluid leakage from a piston seal or joint, and replace the calliper if any such signs are evident. Clean the pad recess in the calliper taking suitable precautions to protect from dust inhalation.

3. If refitting the existing brake pads, refit each pad in the same position as originally fitted.

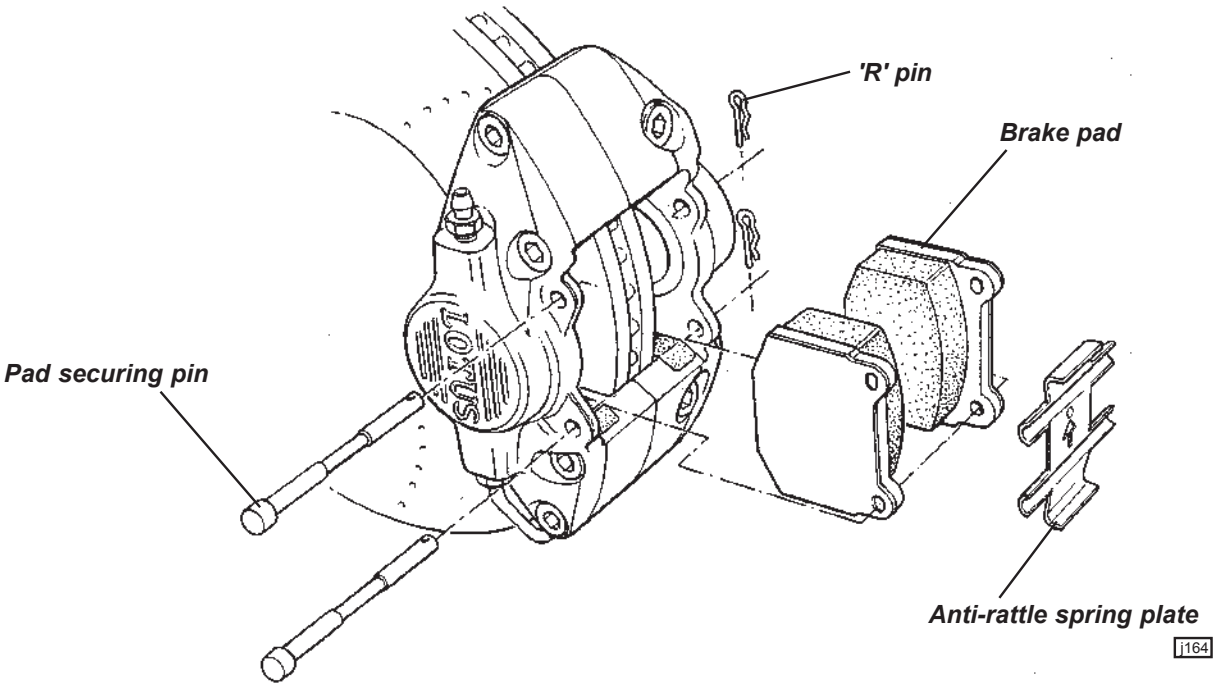

4. If fitting new pads, the pistons must be pushed back into the calliper to provide the necessary clearance. This action will return fluid to the master cylinder such that some fluid may need to be removed in order to prevent overflowing. Take care to avoid damaging the brake disc surface, or distorting the disc.

5. Position the pads in the calliper, and insert the upper pad retaining pin from the outboard side. Secure with the split pin.

6. Fit the anti-rattle spring into position with the side tangs pressing against the top end of the pad backplates, and the centre tang beneath the retaining pin. Insert the second pad retaining pin into the calliper, passing over the lower central anti-rattle spring tongue.

7. Before driving the car, press the brake pedal several times to bring the pads to their correct running position. Top up the master cylinder reservoir if necessary to bring the level to the top of the 'MAX' mark.

8. Ensure the customer is made aware that maximum braking efficiency will be achieved if, for the first few hundred miles, needless heavy braking is avoided, and the brake pads are allowed to 'bed in' fully before being used to their full potential.

JJ.5 - REAR BRAKE PAD REPLACEMENT

Pad thickness may be checked after removing the road wheel, without disturbing the calliper.
Standard pad thickness (excluding backplate); 6.5 mm
Minimum pad thickness (excluding backplate); 2.5 mm

If the thickness of any pad is below the specified minimum, the axle set of pads should be renewed. Note that the pad backplates are marked T 4139 and are factory fitted with anti-squeal overlays.

Downloaded from www.Manualslib.com manuals search engine

Tools Required:
Piston Retraction Tool T000T1242

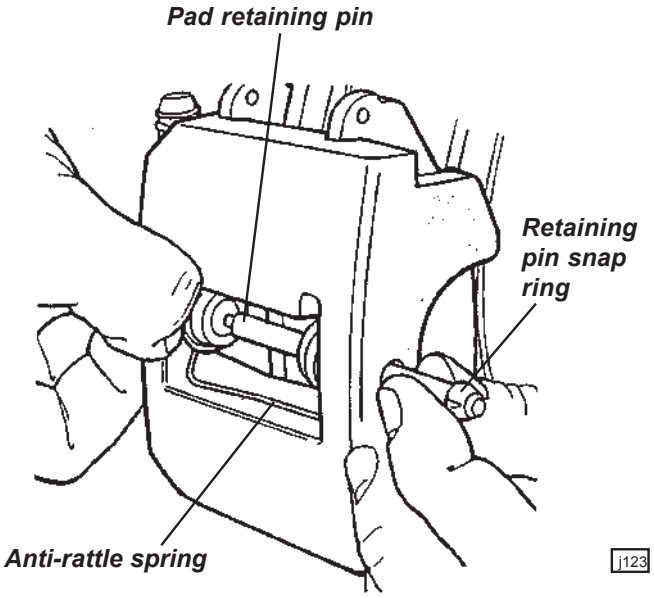

1. Remove the rear road wheels.

2. At each rear corner: using a suitable pin punch, knock the pad retaining pin out of the calliper towards the outside, taking precautions as necessary to restrain the anti-rattle spring from flying off as the pin is withdrawn.

3. Remove the anti-rattle spring, and withdraw both brake pads from the calliper. Measure the thickness of the lining material, and renew the axle set of pads if any are below 2.5 mm.

4. Before refitting the pads, inspect the piston boot for splits, cracks or other damage, and for any signs of fluid leakage or wetness.
   If any such signs are apparent, the complete calliper should be replaced as Brembo do not recommend that this calliper be dismantled.

5. If refitting the existing brake pads, refit each pad in the same position as originally fitted.

6. Before fitting new rear pads, the calliper piston must be screwed back into the calliper down the parking brake actuation mechanism. This operation requires the use of special tool T000T1242 and the removal of the brake disc:
   - Remove the single socket head screw retaining the brake disc, and remove the disc.
   - Fit special tool T000T1242 into the holes in the calliper piston, and screw the piston back down the parking brake mechanism screwthread until fully bottomed.
   - Refit the brake disc, and tighten the countersunk retaining screw to 12 Nm.

7. In order to minimise brake squeal from new pads during the bedding-in period, a copper based (PBC) paste (e.g Renolit) should be used on the pad contact surfaces of the rear callipers in the areas shown:

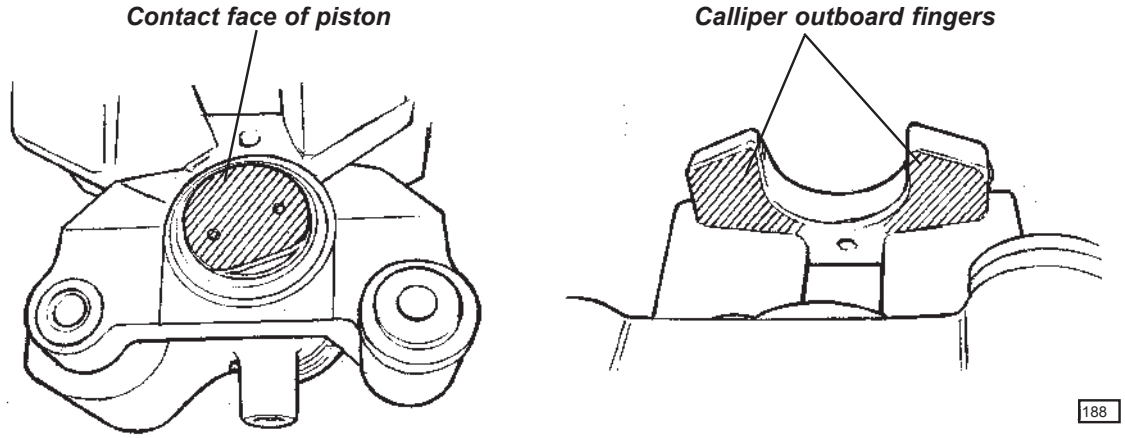

Downloaded from www.Manualslib.com manuals search engine

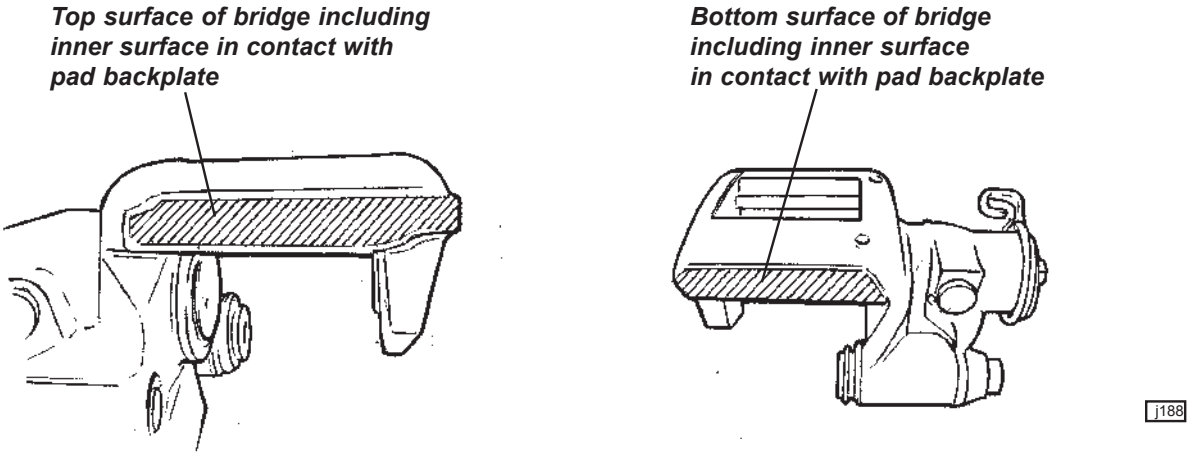

8. Slide the brake pads into the calliper. Position the pad anti-rattle spring in the calliper aperture, with the spring ends located in the recesses provided. Ensure that the spring is fitted the correct way up, w i t h the turned spring end in the longer recess. Press the spring eyes into alignment whilst the pad retaining pin is inserted through the calliper from the outside. Ensure that the pin passes through both eyes of the anti-rattle spring, and both brake pads, and that the pin is fully installed with the snap ring seated in the outboard side of the calliper.

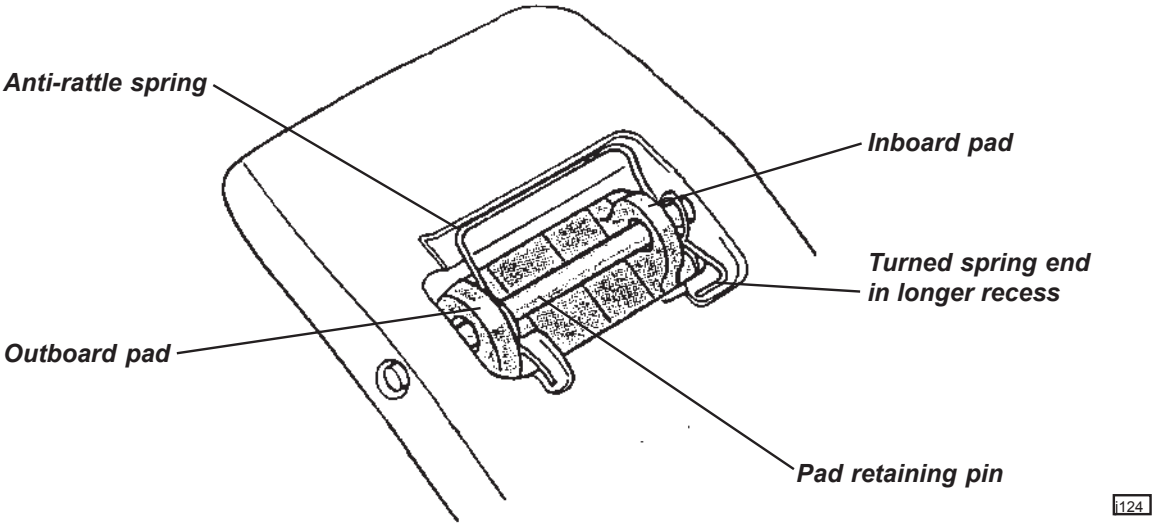

9. Refit the roadwheels and press the brake pedal several times to set the brake pad position. Before switching on the ignition, check the fluid level in the reservoir and top up if necessary.

10. Ensure the customer is made aware that maximum braking efficiency will be achieved if, for the first few hundred miles, needless heavy braking is avoided, and the brake pads are allowed to 'bed in' fully before being used to their full potential.

Downloaded from www.Manualslib.com manuals search engine

JJ.6 - PARKING BRAKE MECHANISM

Operation of the parking brake lever applies a pull to a short link cable which connects via a horseshoe compensator to the centre of a single cable linking the two rear callipers. At each calliper, the cable connects to a lever which operates the hydraulic piston by mechanical means:

Movement of the calliper lever causes rotation of one of a pair of steel discs, rotation of the other being restrained by a stop bolt in the cylinder. Hardened balls housed in ramps machined in the discs, force the discs apart, and in so doing, apply an axial force to the piston via a screwthread and nut. The nut is restrained in the piston by a one way clutch which grips the nut when the parking brake is applied, but allows it to turn when the mechanism relaxes, or when the piston is operated hydraulically by the footbrake. In this way, the mechanical mechanism is adjusted automatically to compensate for pad wear.

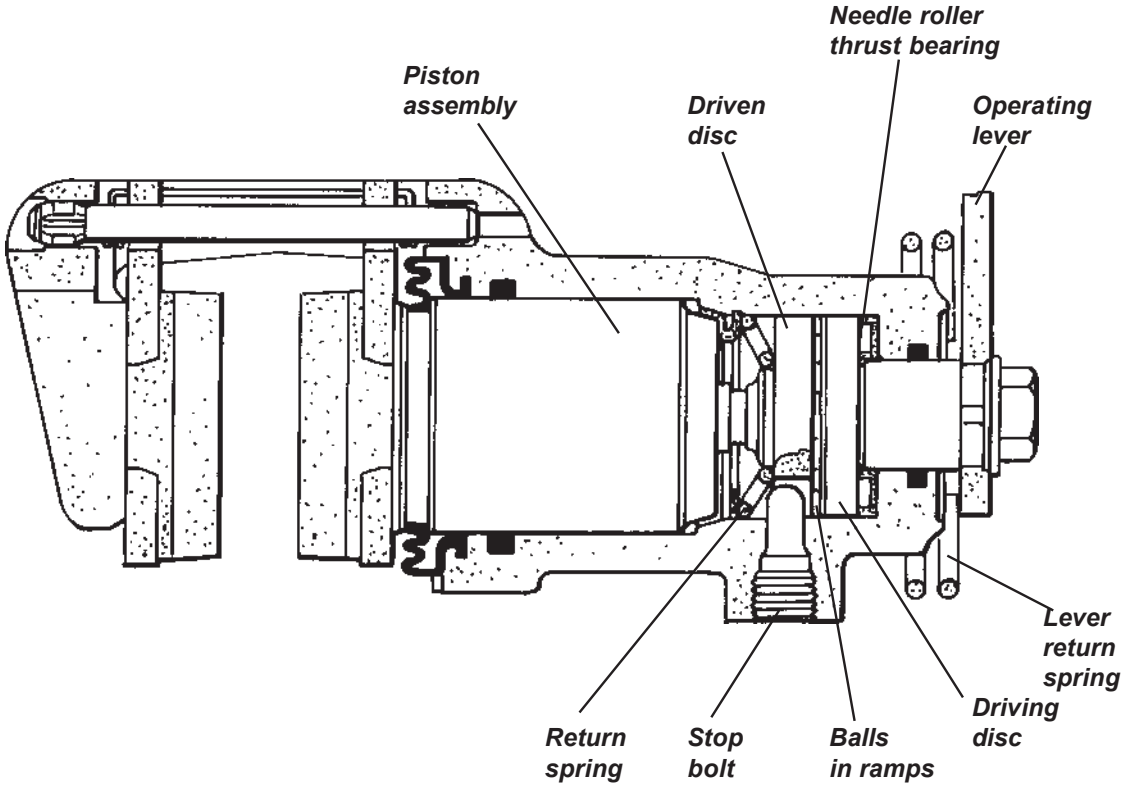

i126

For the auto adjustment system to function correctly, it is essential that each calliper parking brake lever is allowed to return fully when the brake is released, and is not prevented from doing so by maladjustment of the parking brake cable. To check that the calliper levers are fully returned; with the parking brake 'off', measure the distance between the cable abutment and calliper lever as shown.

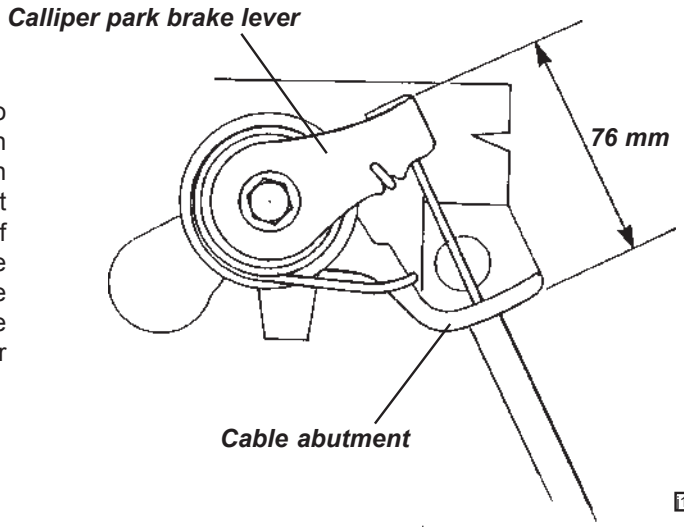

i139

Downloaded from www.Manualslib.com manuals search engine

After verifying this dimension, any slack in the rear cable may be adjusted out at the left hand outer cable abutment, which is integral with the pivot bracket for the front leg of the lower wishbone. Remove the engine bay undertray for access. After adjustment, re-check the calliper lever 'off' dimension.

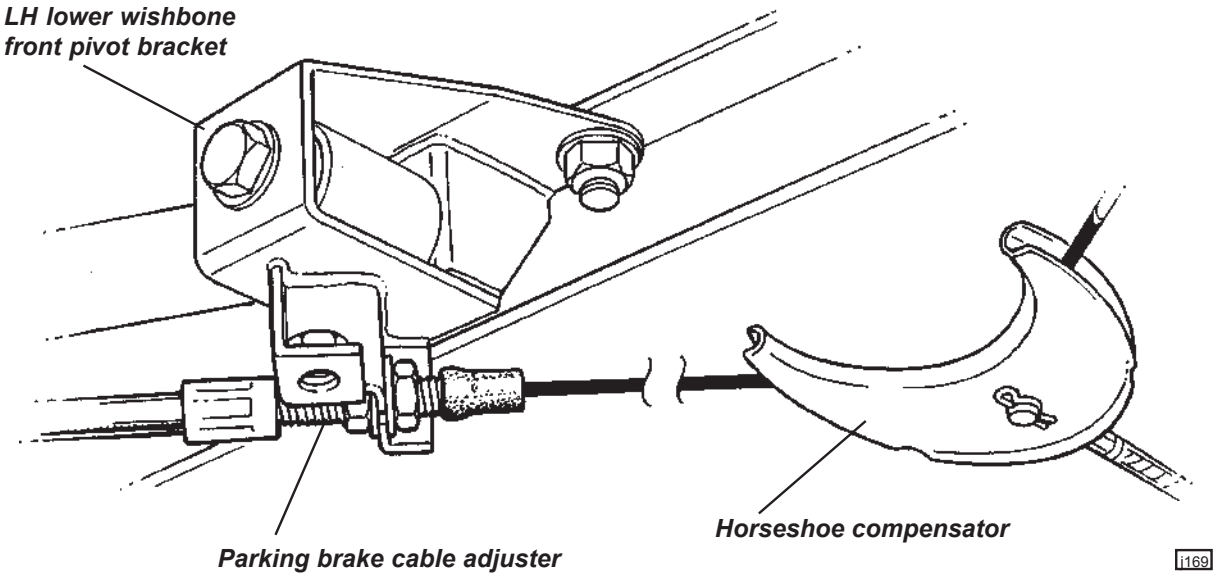

The parking brake lever is mounted in a steel bracket which also houses the gearchange lever, and is bolted to the seat mounting crossmember at the front, and to the floor rear crossmember. The parking brake lever is secured by two bolts fixing the ratchet quadrant to the bracket. Access to the lever is available after removing the cockpit centre trim panel:

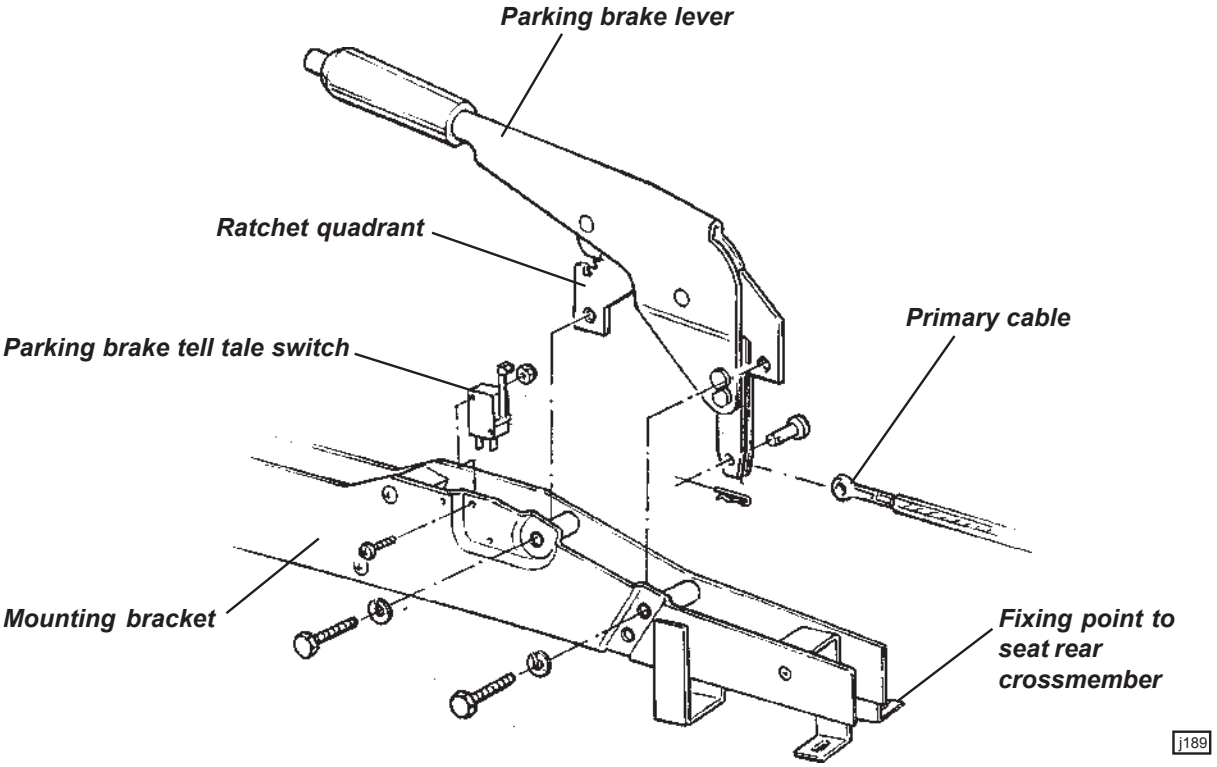

Downloaded from www.Manualslib.com manuals search engine

- Unscrew the gear lever knob.
- Release the fixing screw at either side of the gear lever shroud base.
- Remove the single screw retaining the rear bulkhead centre pocket, and then the two screws securing the rear shroud. Disconnect the auxiliary power socket.
- Lift the centre trim panel, label and disconnect the CDL switch and (if fitted) hazard switch, and release the gear lever gaiter.

Note that the parking brake/gearchange lever mounting bracket is not drive handed, but is offset, via alternative fixing holes in the chassis, *towards the passenger side*. The ratchet pawl operates a micro switch to light the 'brakes' tell tale lamp in the instrument panel whenever the ignition is switched on and the parking brake is applied. The short front cable is connected to the lever assembly by a clevis pin with spring retaining clip. When carrying out any work in this area, take care not to damage or misroute the electrical main harness.

JJ.7 - BRAKE DISCS

All four wheel brakes use a brake disc which is sandwiched between the wheel and its hub flange, being centralised by the hub spigot, and transmitting torque via the clamping force of the road wheel bolts. A countersunk screw is used to retain the discs for convenience when servicing.

The same disc is used at each corner of the car, and features cast iron construction with internal curved vane cooling and cross-drilling. The opposite direction of rotation of the curved vanes on each side of the car does not significantly affect the cooling performance of the disc. The condition of the brake disc friction surface is a major factor in brake performance and feel, with a good surface quality and minimal run-out and thickness variation being required. After an extended lay up, some surface corrosion may develop on the discs which will cause a degradation in braking quality until the surfaces are cleaned up by normal brake action. Excessive run-out or thickness variation as a result of overheating or extended wear, may cause brake judder and/or extended pedal travel due to pad 'knock off'. Scoring and ridging of the braking surfaces will be exacerbated by operation in dusty or unmetalled road environments, and will reduce braking performance.

No skimming or re-surfacing of the brake discs is recommended. If the disc becomes badly scored, or is out of specification in any way, it should be renewed. NOTE: Ensure that there is no discernible free play in the wheel bearings before attempting to measure brake disc run-out. If disc run-out exceeds the service maximum, check the hub run-out before replacing the disc.

Brake disc thickness:	New	26.0 mm (1.02 in)
	Service minimum	24.0 mm (0.98 in)
Runout:	New maximum	0.03 mm (0.001 in)
	Service maximum	0.10 mm (0.004 in)
Hub:	Disc mounting face run-out max.	0.04 mm (0.0015 in)

Front Disc Replacement

1. Remove the road wheel.

2. Remove the two bolts securing the brake calliper to the hub carrier, and withdraw the calliper from the disc. Secure clear without straining the flexible hose.

3. Remove the single countersunk screw, and withdraw the disc from the hub.

4. Before re-fitting a disc, ensure that the mating face between disc and hub is scrupulously clean. Mount the disc onto the hub and align the wheel bolt holes.

5. Apply Permabond A130 (Blue - A912E7033) to the threads of the calliper fixing bolts. Fit the calliper over the disc and secure to the hub carrier with the two bolts. Tighten to 45 Nm (33 lbf.ft).

6. Refit the road wheel and operate the brakes before driving the car to set the brake pad position.

Rear Disc Replacement

Replacement of the rear discs is similar to that for the front discs, except that if the brake pads are removed, it is not necessary to remove the brake calliper to enable the disc to be withdrawn from the hub.

Downloaded from www.Manualslib.com manuals search engine

JJ.8 - BRAKE CALLIPERS

The front brake callipers are manufactured by A.P. Racing, and are to be dismantled or overhauled only by their factory at Wheeler Road, Seven Stars Industrial Estate, Coventry, CV3 4LB.

Torque settings:

Flexible hose to front caliper: 22 Nm
Front caliper to hub carrier: 45 Nm

The Brembo rear brake callipers may have the sliding pins overhauled as detailed below, but any signs of hydraulic leakage from the cylinder indicate that the unit should be replaced.

Rear Calliper Sliding Pins

The sliding bushes and sleeves of the Brembo rear callipers may be replaced without disturbing the hydraulic connection:

a) Disconnect the parking brake cable from the calliper.

b) Remove the cap head bolt securing the bottom guide bush to the hub carrier.

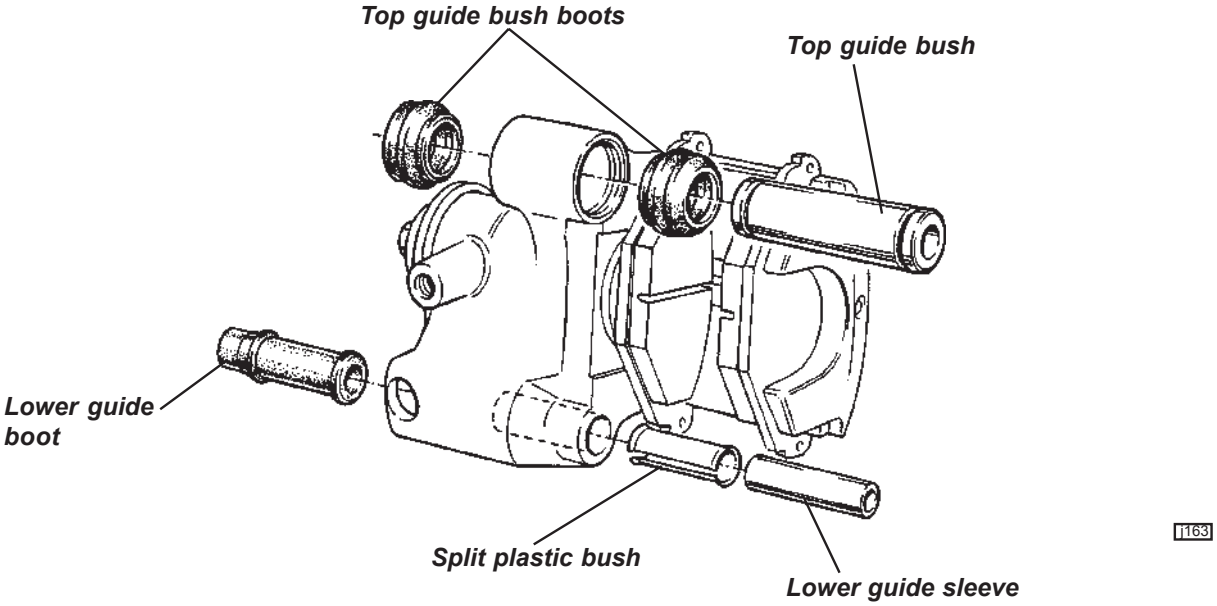

c) Remove the hex. head bolt securing the top guide bush to the hub carrier, and withdraw the calliper from the car with the brake hose still connected.

d) Slide out the lower steel guide sleeve and withdraw the bush/boot from the calliper. Pull the boots off the top steel guide bush and slide out the bush from the calliper.

e) Clean the guide bores in the calliper body with brake cleaner. Lubricate the new bushes and boots with silicone grease provided in the repair kit, and reassemble into the calliper in reverse order to disassembly.

f) Refit the calliper to the hub carrier using Permabond A134 on the threads of both bolts, torque tightening the two fixings to:
Upper M10 bolt; 45 - 50 Nm (33 - 37 lbf.ft)
Lower M8 caphead; 26 - 30 Nm (19 - 22 lbf.ft)

g) Reconnect the parking brake cable and operate the footbrake to reposition the pads before driving the car.

Downloaded from www.Manualslib.com manuals search engine

JJ.8A - '08 MODEL YEAR UPGRADE OPTION

Introduced as an option for some '08 models, is an uprated front brake kit, comprising 4-piston front callipers, larger diameter front discs and steel braided hoses.

Front Callipers:

At each front corner, the A.P. Racing, alloy, 4-piston front calliper is radially mounted to the front hub carrier via an alloy adaptor bracket. Two reduced head capscrews secure the adaptor bracket to the hub carrier, with two capscrews with washers securing the calliper to the adaptor. Two retaining pins are used to locate the Pagid RS14 brake pads, and also secure an anti-rattle spring plate which incorporates a direction of rotation arrow.

Torque figures: Adaptor to hub carrier; 58 Nm. Calliper to adaptor; 58 Nm. Caliper bleed screw; 17 Nm.

Front Discs:

The front discs are increased in diameter from 288mm to 308mm, and are cooled by internal curved vanes which trail the normal direction of rotation, to result in distinct RH and LH components. Each disc is mounted to its hub via an adaptor 'bell' from which it should not be separated under normal circumstances. Torque of disc to bell mounting bolts; 14 Nm. Note that these discs are fitted only on the front, with standard discs on the rear.

New thickness of the front discs is 26.00mm; minimum service thickness 25.00mm

Wheel bolts:

In order to provide sufficient clearance between the 4-piston brake callipers and all road wheel options, the thickness of the disc mounting bell at the hub face is increased from the standard 7mm disc thickness to 11mm. This requires the use of 2mm longer wheel bolts (C117G6000F) to maintain sufficient thread engagement. To reduce the possibility of incorrect fitment, both front and rear wheels are secured with the longer bolts, with no coded security bolts fitted. Note that these bolts use the standard spline type socket heads, but have a reduced outside diameter of the head.

Standard bolt;	B117G6000F	26mm thread length	Head outside diameter: 22mm
Long bolt;	C117G6000F	28mm thread length	Head outside diameter: 19mm

Braided hoses:

The steel braided front hoses are connected to the front callipers using a banjo fitting tightened to 25 Nm.

Downloaded from www.Manualslib.com manuals search engine

JJ.9 - BRAKE MASTER CYLINDER

The tandem brake master cylinder is mounted in the front compartment and is secured to the brake servo by two studs with M8 nuts. The cylinder uses two pistons to supply the independent front and rear brake circuits. The cross-section below is provided for information, but the master cylinder manufacturer does not recommend any dismantling of the unit, and supplies no replacement parts or internal components. If the cylinder is faulty it should be renewed as a complete assembly.

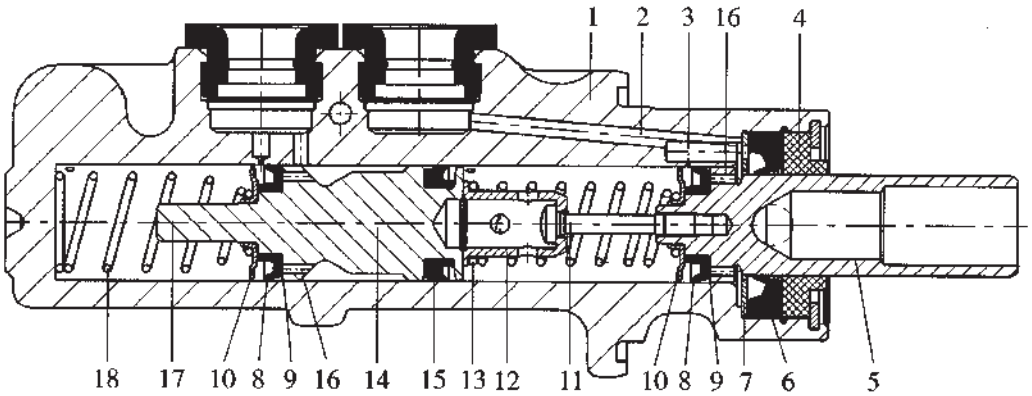

j187

Key to Cross-Section

1. Body
2. Passage to rear cylinder
3. Rear cylinder inlet port
4. Guide bush
5. Rear piston
6. Lip seal
7. Stop washer
8. Primary seal
9. Washer
10. Spring plate
11. Retaining screw
12. Stop sleeve
13. Rear piston spring
14. Front piston
15. Secondary seal
16. Transfer passage
17. Front piston stop
18. Front piston spring

To remove the unit, proceed as follows:

1. On Exige models, remove the front clamshell (see sub-section BR.6).

2. Syphon fluid from the reservoir to reduce spillage.

3. Release the two hoses connecting the master cylinder to the fluid reservoir, and the single hose connecting to the clutch master cylinder, and plug all hoses. Disconnect the electrical cables from the reservoir cap, cut the tie wrap and withdraw the reservoir from the mounting bracket.

4. Release the two brake pipes from the master cylinder, and plug the pipes and ports.

5. Release the two nuts securing the master cylinder to the brake servo and remove the cylinder.

6. Refit the master cylinder in reverse order to removal, using NEW locknuts (supplied with a new cylinder) and tighten to the following torques:
   - Master cylinder fixing nuts; 25 Nm
   - Brake pipes to cylinder; 17.5 Nm

7. Fill the reservoir with DOT 4 non-mineral type brake fluid, and bleed the complete brake system of air using standard vacuum assisted, pressure assisted or manual techniques.

Downloaded from www.Manualslib.com manuals search engine

JJ.10 - VACUUM SERVO UNIT

The FTE brake vacuum servo is, with the exception of the air filter and non return valve, a non-servicable sealed unit which if found to be faulty, must be replaced as an assembly. The air filter (surrounds the input push rod) should be replaced whenever the brake system is overhauled, and cleaned or replaced more frequently if the vehicle is operated in dusty conditions. A vacuum non-return valve is incorporated into the vacuum hose elbow connector in the front case of the servo unit, and a second in-line non-return valve is fitted into the supply line close to the engine. The elbow connector valve is a push fit into a grommet in the servo shell, and is supplied complete with the grommet.

The servo is fitted between the brake pedal and master cylinder and is of the 'suspended in vacuum' type, wherein a flexible diaphragm divides the space inside a steel shell into two chambers. The front chamber is connected, via a non-return valve, to the vacuum produced in the engine's inlet plenum chamber. When the brakes are 'off', this vacuum is also applied to the rear side of the diaphragm, which is held towards the rear of the shell by a spring. The brake pedal is connected to the brake servo control rod, which operates a control valve before pressing against the output rod via a pliant reaction disc.

Brakes Off

In the simplified schematic diagram, with the brakes off, the diaphragm and driving piston are pushed to the left by the main spring, and the input rod is pushed to the left by its own spring, causing the control valve to close off the atmospheric port. Engine vacuum admitted to the right hand side of the diaphragm is also communicated to the left side of the diaphragm, and the unit is stable.

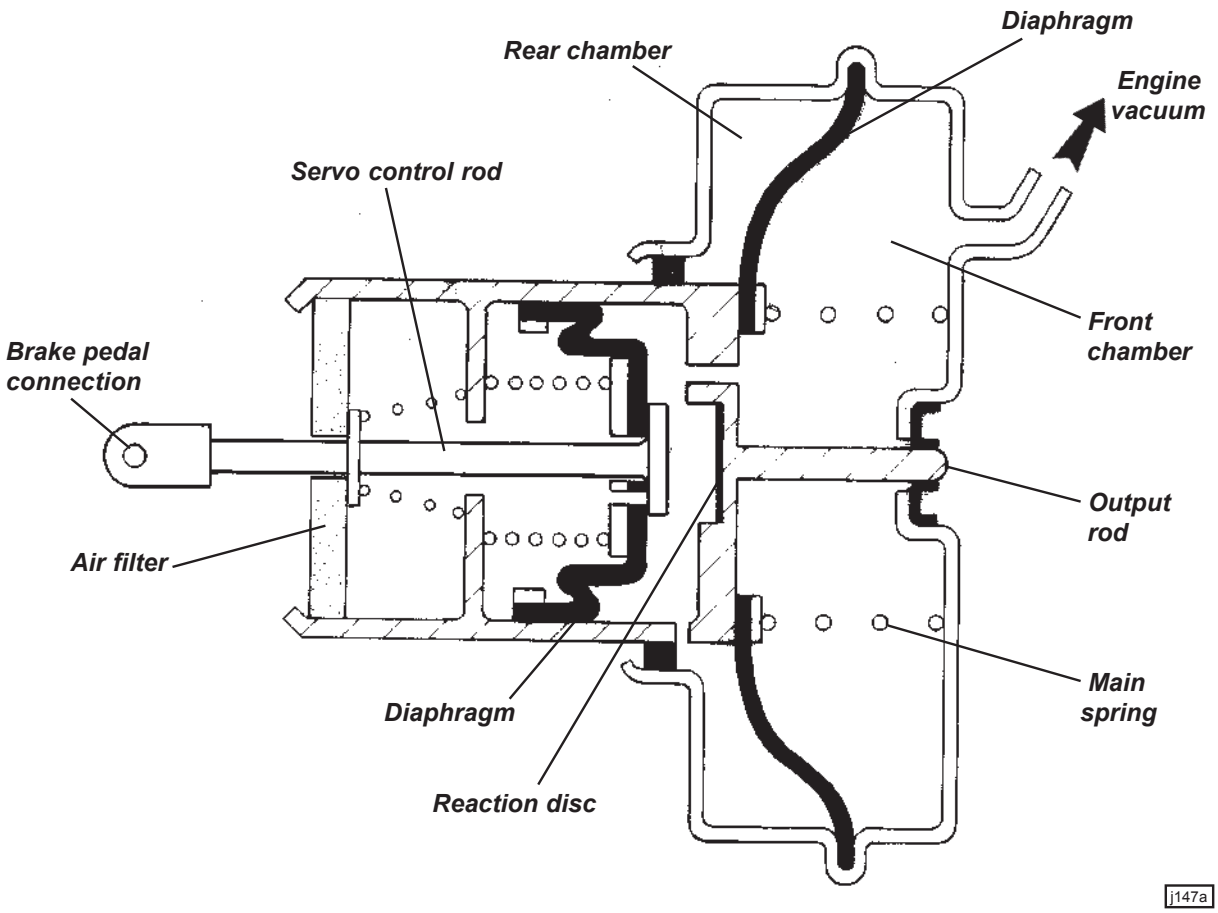

Downloaded from www.Manualslib.com manuals search engine

Initial Movement

Initial movement of the brake pedal causes the input rod to move to the right, and allows the control valve under the action of its spring, to close off the vacuum port in the driving piston. The atmospheric port remains closed.

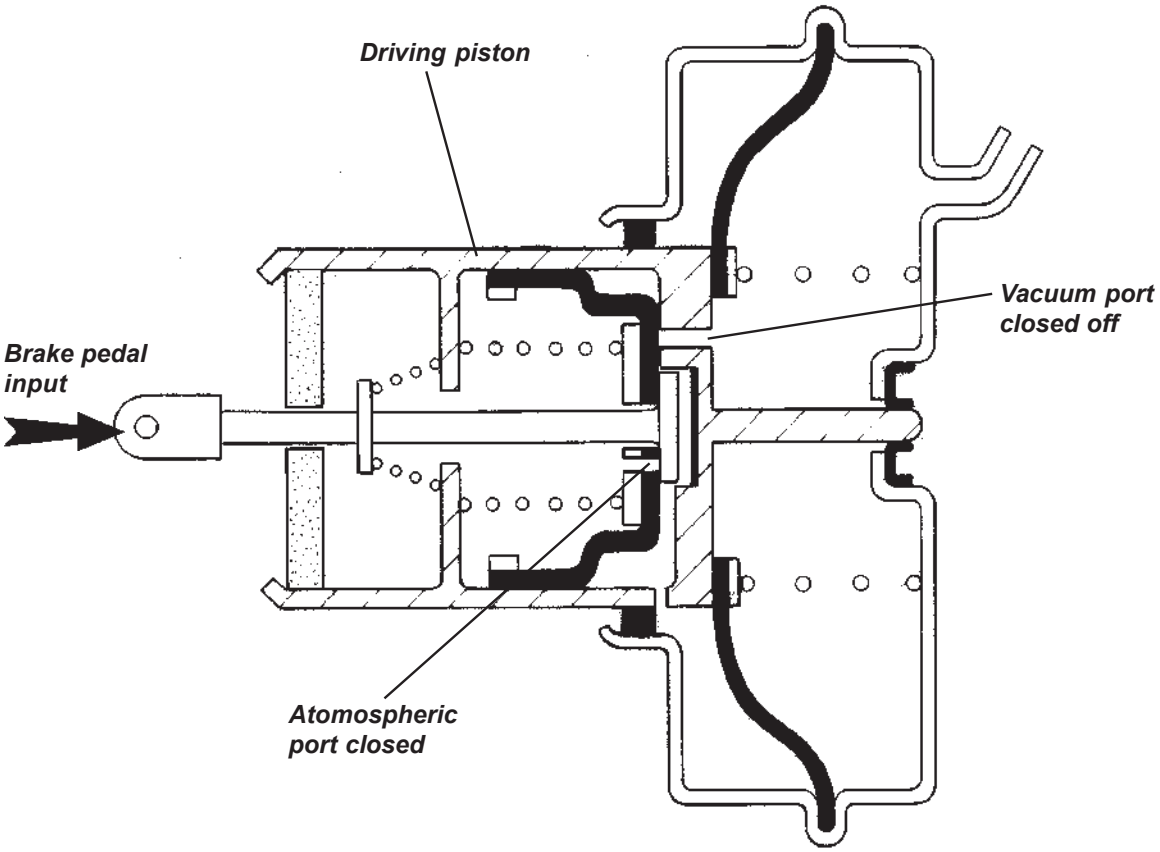

147b

Downloaded from www.Manualslib.com manuals search engine

Pressure Balance

Further pressure on the brake pedal opens the atmospheric port and bleeds atmospheric pressure into the left hand chamber. This pressure imbalance causes the driving piston to move to the right, adding assistance to the force applied directly to the output rod (and the master cylinder) via contact between the input and output rods. When the force produced by the pressure differential across the diaphragm balances the reaction force of the main spring and master cylinder, movement of the driving piston ceases, with both control valve ports closed, and the system once again in equilibrium.

From this position of equilibrium, further pressure on the pedal will tend to open the atmospheric port and allow pressure in the left hand chamber to increase, and move the driving piston to the right before again stabilising. Any reduction in pedal pressure will tend to open the vacuum port and allow the higher pressure in the left hand chamber to bleed off into the right hand chamber, whose depression is kept constant by its connection with the intake plenum. The pressure imbalance is reduced, and the driving piston will move to the left under the action of the main spring, until equilibrium is again restored.

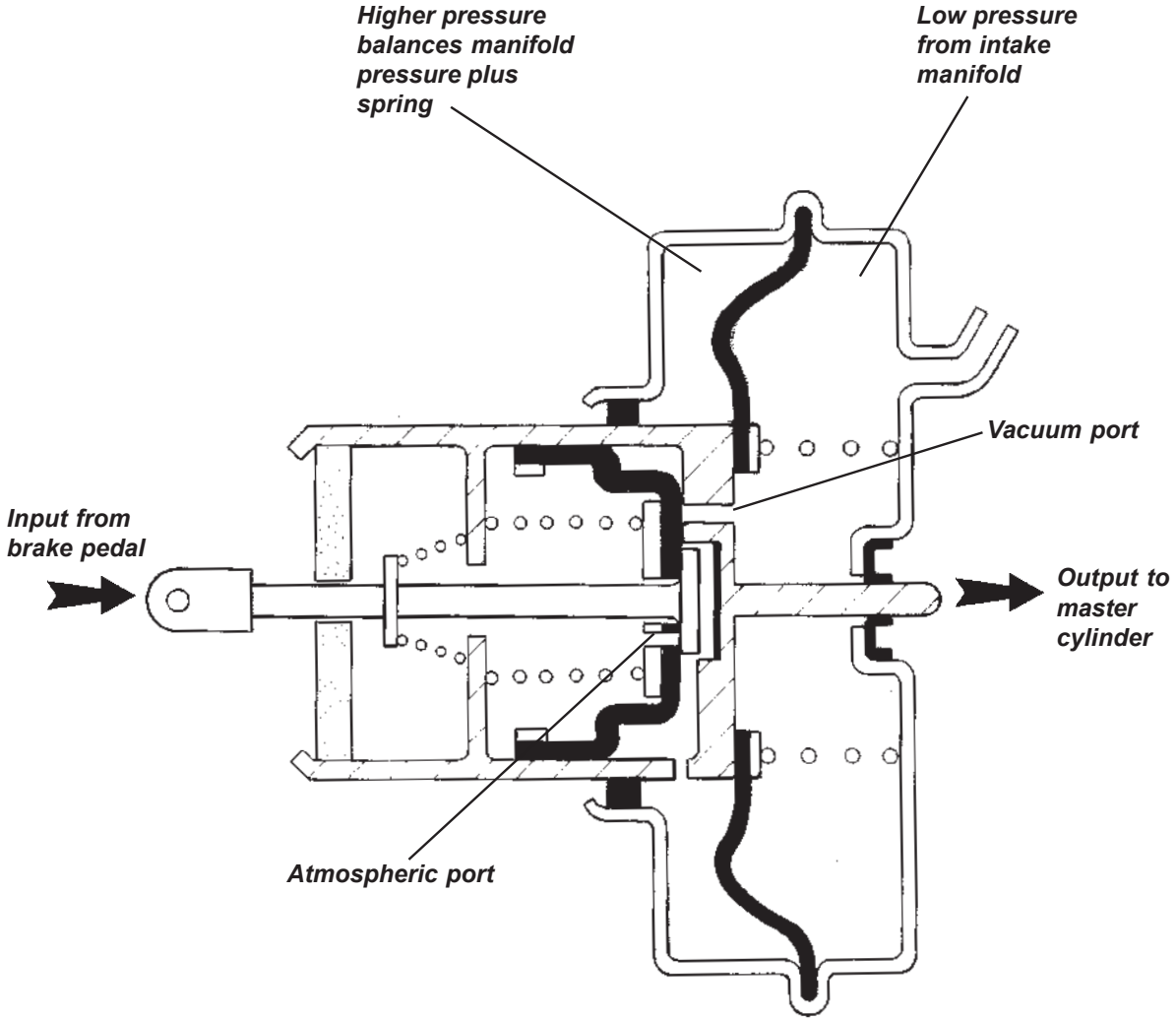

147c

Downloaded from www.Manualslib.com manuals search engine

Maximum Assistance

If the pedal is pressed hard, the atmospheric port will be held open, so that the left hand chamber will be subject to full atmospheric pressure. This is full servo assistance which will, with 0.8 bar of vacuum available from the engine, increase the force applied to the master cylinder pushrod by approximately four times.

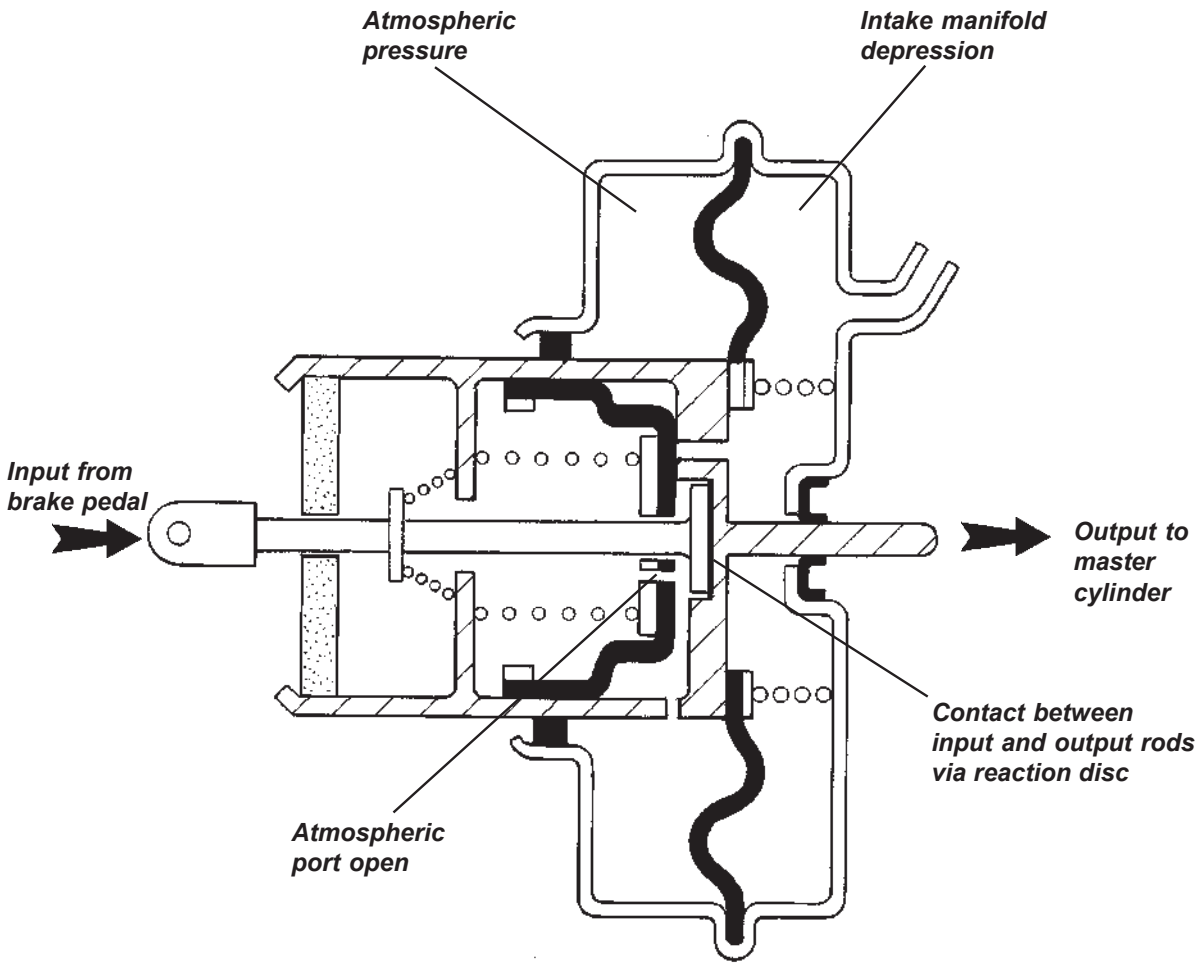

j147d

When pedal pressure is relaxed, the vacuum port in the driving piston will open and bleed the higher pressure from the left side of the diaphragm into the right hand chamber and thence into the engine plenum, collapsing the pressure differential across the diaphragm. The driving piston is moved fully to the left by the main spring.

The pliant reaction disc fitted between the input and output rods ensures a graduated application of servo assistance and provides pedal feedback and 'feel' to the driver.

Downloaded from www.Manualslib.com manuals search engine

Operational Check

As a quick check of servo operation proceed as follows: With the engine stopped, press the brake pedal several times to exhaust the servo unit of vacuum. Keeping the pedal pressed (which should be 'hard' and 'high'), start the engine; The pedal should drop slightly as the servo vacuum builds up, and extra force is produced. If the pedal does not drop, it is most likely that there is a fault in the vacuum supply line. Check the vacuum hose, all connections and the non-return valve. If the vacuum supply is not defective, the servo unit should be replaced.

Setting brake pedal: It is essential that the servo piston (and master cylinder piston) is allowed to return fully when the brakes are released, and is not pre-loaded by mal-adjustment of the input pushrod. See sub-section JJ.11.

Stop light switch: The stop switch is mounted in a right angle bracket fixed to the underside of the scuttle, and abuts directly against the pedal. The switch is retained in the bracket by a quarter turn mechanism.

To Replace Brake Servo Unit

1. Remove the brake master cylinder (see sub-section JJ.9).

2. From within the footwell, disconnect the servo pushrod from the brake pedal.

3. Disconnect the brake servo vacuum hose, and release the four nuts securing the servo to the pedal box extension plinth. Withdraw the servo assembly.

4. Replace the servo in reverse order to the above, tightening the servo mounting nuts to 25 Nm, and the new master cylinder fixing nuts to 25 Nm. Check pushrod adjustment (see sub-section JJ.11) and bleed the hydraulic system.

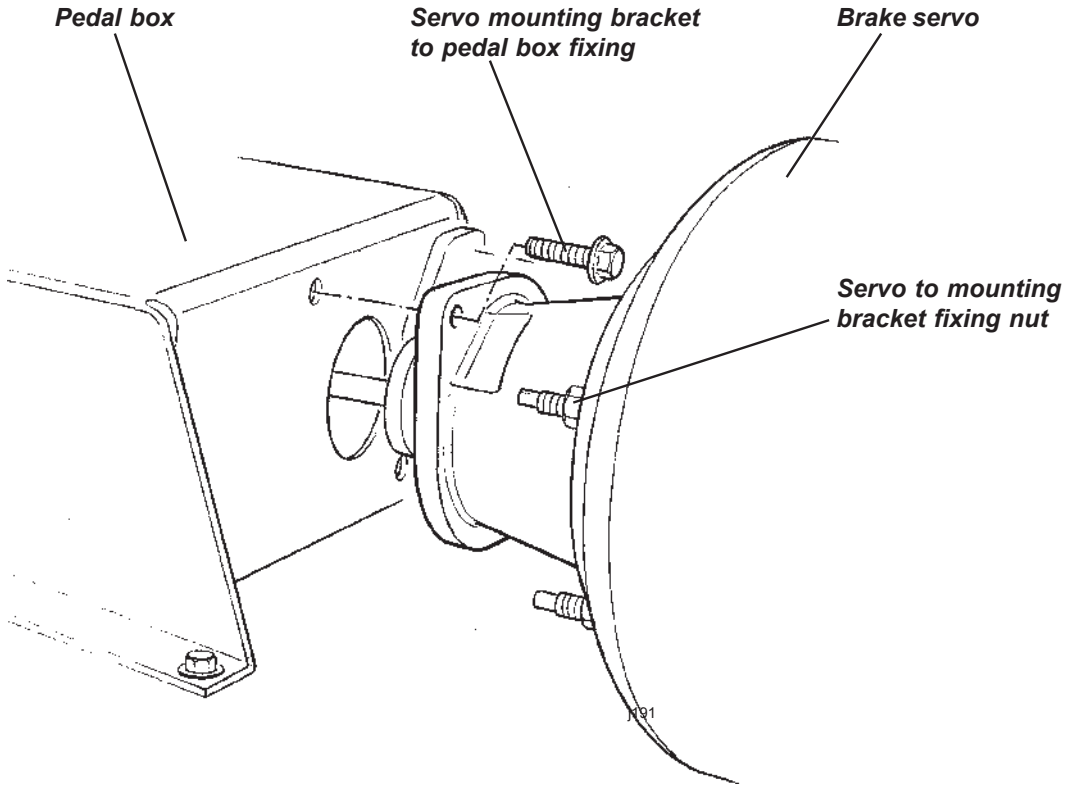

Downloaded from www.Manualslib.com manuals search engine

JJ.11 - PEDAL BOX

PRIOR TO '06 M.Y.

The extruded and welded aluminium alloy pedal box is bonded and rivetted to an aperture in the chassis scuttle. A hollow steel pivot shaft serving all three pedals is bolted to a steel mounting plate, itself bolted to the inside of the pedal box. Each pedal is machined from a common alloy extrusion, with the throttle pedal being of a narrower section than that used for the brake and clutch. An extruded footpad is keyed, bonded and rivetted to the clutch and brake pedals, and is bolted to the throttle pedal. All the pedals use synthetic bushes for maintenance free articulation on the steel pivot shaft, and the clutch pedal uses a cylindrical steel trunnion supported in synthetic bearing rings to actuate the master cylinder pushrod.

In order for the required pedal spacing to be achieved within the packaging constraints of the vehicle, the brake pedal uses a relay lever to move the output plane inboard of the pedal line. A steel relay lever pivots on the common pedal shaft, and is equipped with two legs, one of which is used to connect to the brake pedal via an integral trunnion, whilst the other leg is connected to the brake servo pushrod by a clevis pin.

The throttle pedal actuates the throttle cable directly, which is routed along the cockpit centre, beneath the gear lever and parking brake lever trim panels, beneath the fuel tank bay and up to the front of the engine bay to the throttle body.

Adjustment

Throttle cable:

- The pedal is pulled against a rubber buffer on a steel upstop bracket by an extension spring.
- Adjust the cable outer length at the engine end abutment bracket to allow 2 - 3mm of pedal movement before the throttle is actuated.
- Set the downstop in the pedal footpad such that vigorous full depression of the pedal achieves full opening of the throttle butterfly without allowing the cable to be strained.
- An alternative pedal position which may be preferred for 'heel and toeing' may be achieved by replacing the rubber upstop buffer with a M5x15 hex. head setscrew, with three flat washers beneath the head for a total thickness of around 7mm. The cable must then be re-adjusted at the engine abutment as above. The footpad downstop bolt should then be replaced by an M8x20 setscrew and reset as above.

Brake pedal:

- The pedal is pulled 'off' by an extension spring anchored to a bracket rivetted to the scuttle beam.
- There is normally a gap of approximately 3mm between the brake pedal and the pedal box upstop flange with the pedal released. If preferred, the brake pedal can be raised slightly by adjusting the effective length of the pushrod at its connection to the clevis, but the master cylinder must never be preloaded, i.e. there must always be a small clearance between the pedal and upstop bracket to ensure that the master cylinder piston is allowed fully to return and open the reservoir port.
- After any adjustment, tighten the clevis locknut and check operation of the brake light switch.

Clutch pedal:

- The pushrod, which is captive in the master cylinder, is screwed fully into the pedal trunnion, and controls the pedal height. Rubber buffers are provided to cushion the pedal at full travel.

Pedal Removal

To remove a pedal from the pivot shaft, the pedal shaft mounting plate must be removed from the pedal box complete with all three pedals:

1. Remove the intermediate steering column (see Section HG).

2. Disconnect the brake servo clevis pin from the pedal relay lever, and release the throttle cable from the pedal.

3. Remove the two bolts securing the clutch master cylinder assembly to the pedal box and unscrew the pushrod from the pedal trunnion.

4. Remove the two bolts securing the brake servo mounting plinth to the pedal box and provide alternative support for the servo/brake master cylinder assembly.

Downloaded from www.Manualslib.com manuals search engine

5. Release the pedal return springs and remove the stop lamp switch.

6. From above, release the six M6 screws securing the pedal shaft mounting bracket to the top of the pedal box, and the single screw in the front face of the pedal box. Withdraw the pedal shaft assembly from inside the pedal box.

7. Remove the three M5 screws securing the pedal shaft to its mounting bracket, and disassemble the pedals from the shaft taking careful note of spacers and washers.

8. On re-assembly, note that the pivot bushes of the brake pedal and relay lever should be lubricated with Syntheso GLK1, or equivalent. Check pedal pushrod and stop switch operation as detailed above.

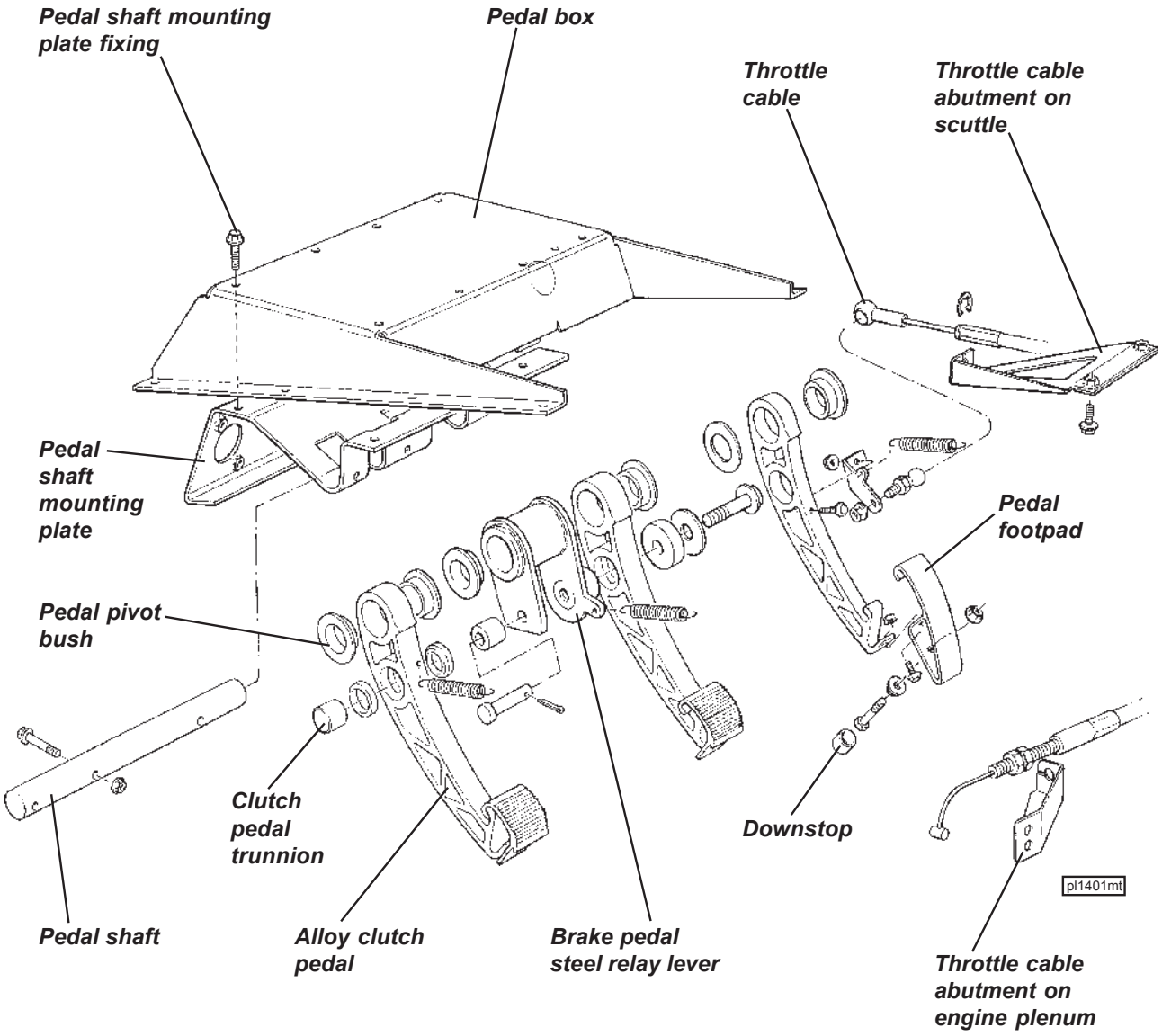

Downloaded from www.Manualslib.com manuals search engine

JJ.12 - ABS THEORY OF OPERATION

The Kelsey-Hayes antilock brake system is an 'add on' type used to supplement the dual circuit, tandem master cylinder, vacuum servo assisted brakes fitted to the Elise. A single electro-hydraulic unit comprising a hydraulic modulator, hydrauliic pump, microprocessor and solenoid valve bank, is mounted in the front services compartment and plumbed into the front and rear brake circuit lines from the tandem master cylinder.

The microprocessor (ECM) receives signals from magnetic wheel speed sensors integrated into each of the four road wheel hubs, and interprets the individual wheel acceleration, deceleration, and comparative wheel speeds. From this data, the ECM is able to determine if any wheel is tending to lock up, and if imminent lock up is sensed, the microprocessor commands the relevant solenoid valves firstly to reduce pressure in that particular brake circuit in order to restore wheel speed, and then to modulate pressure to that providing the maximum braking force consistent with continued wheel rotation. The system is able to monitor and independently control each of the four wheel brakes, and is referred to a 4-channel system.

In order to achieve the required pressure modulation, three basic modes are used:

- Pressure hold;
- Pressure reduction;
- Pressure increase;

In order to maintain the safety provision of two entirely independent hydraulic circuits, one for the front brakes, and one for the rear, the hydraulic elements of the control unit are doubled up, with no part of the system shared between the two circuits. For the pressure hold function, four isolation solenoid valves are used, one in the hydraulic circuit for each wheel brake. The pressure reduction function is achieved by a separate dump solenoid valve in each of the four wheel brake circuits, and the pressure increase provided for by a single electric motor operating two hydraulic pumps, one serving the front, and on the rear brake circuit. Separate low pressure accumulators are used for the front and rear circuits.

Electro-Hydraulic Control Unit

The electro-hydaulic control unit comprises an alloy valve block containing the four isolation valves, four dump valves, two hydraulic pumps and two accumulators, with the single pump motor screwed to the housing, and with a solenoid block and ECM unit attached to the topside. The complete assembly is flexibly mounted via three rubber isolator bushes to a steel cradle, which is itself mounted on three rubber bobbins to the passenger side front chassis. The eight solenoid valves are grouped in two rows, with the valve plungers protruding in sealed canisters from the topside of the unit where each one is surrounded by a solenoid coil. The isolation and dump valves share a similar construction, but the spring loaded isolation valves are normally open, and the dump valves normally closed.

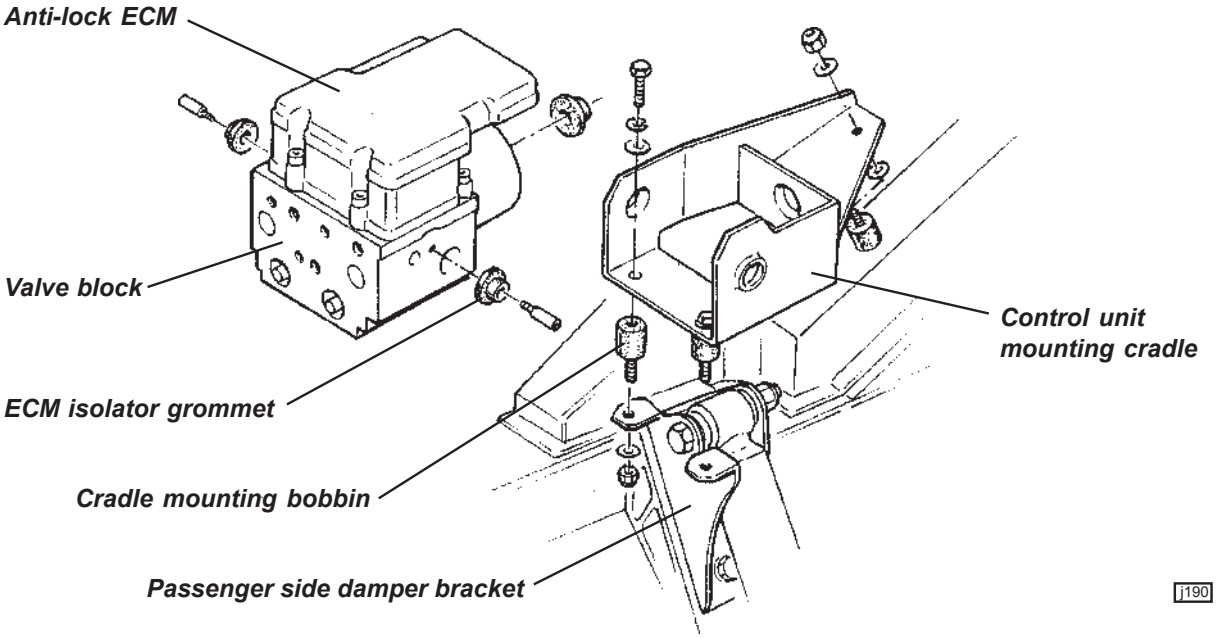

Downloaded from www.Manualslib.com manuals search engine

Anti-Lock Braking

Maximum braking force is provided from a tyre when there is around 15% slippage, dependent on road surface conditions and tyre characteristics. The function of the ABS is to limit tyre slippage when braking to around this figure in order to provide optimum grip, and also, by preventing wheel lock, to ensure that steering control of the vehicle is retained.

A high brake pedal pressure (or low road surface friction) may initiate the locking of one or more wheels. In the diagram below, a typical control strategy is shown:

1. Normal braking occurs until, as the applied pressure increases, the wheel speed signals received by the ECM indicate that the left hand front wheel (for example) is tending to lock. i.e. its deceleration is too rapid, with too great a speed differential with the other wheels.

2. The connection between the master cylinder and the LH front brake circuit is interrupted (by the isolation valve), and the rate of slip increase is reduced.

3. If the wheel speed continues to depart significantly from vehicle speed, the dump valve is energised to reduce pressure in the LH front circuit until wheel speed begins to increase. The dump valve is then closed, as is the isolation valve.

4. As wheel speed approaches that providing optimum grip, the isolation valve is pulsed open to allow a stepped pressure increase.

5. As wheel speed begins to drop off and depart from vehicle speed again, a new cycle starts, repeating steps (1) to (4).

6. When wheel speed increases sufficiently to meet vehicle speed, ABS intervention ceases, although monitoring is continued throughout each braking event.

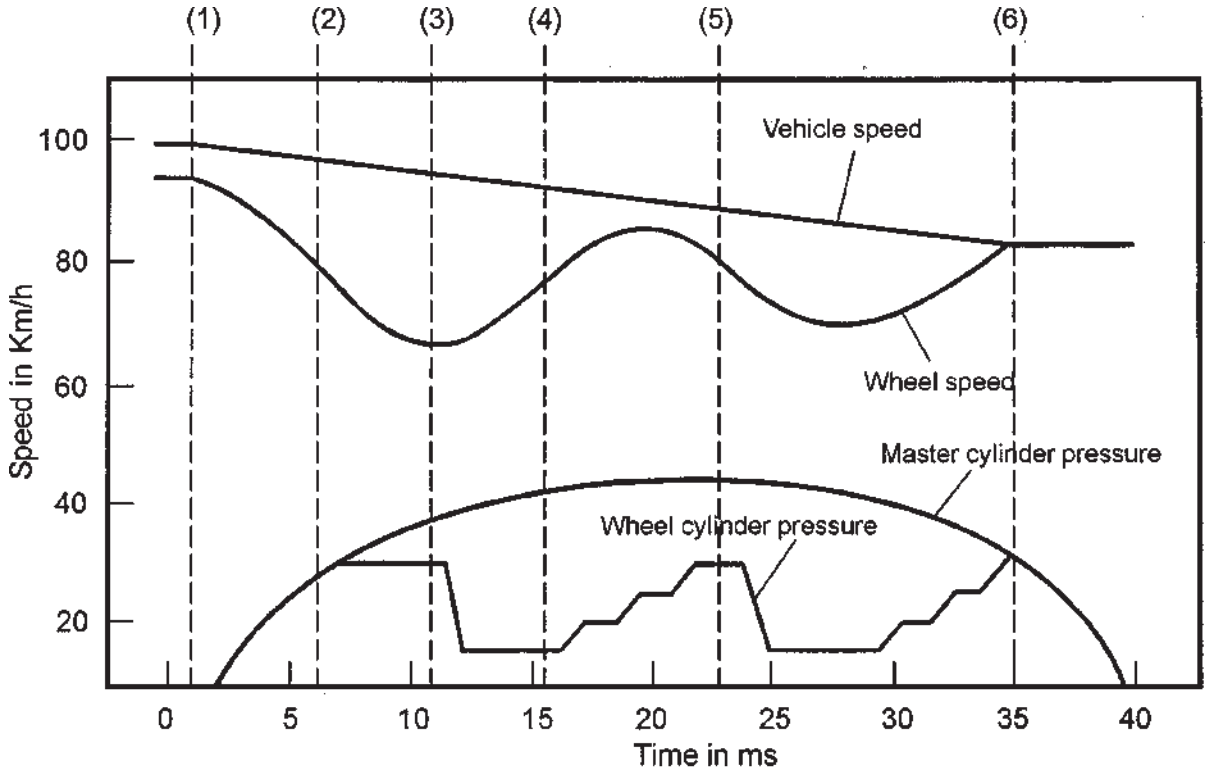

Downloaded from www.Manualslib.com manuals search engine

Sequence of Operation

In the following diagrams, one half of the hydraulic modulator is shown schematically, representing the front brake control circuit, with the sequence of operation described for the left hand front wheel brake. This sequence would be similar for any of the other three wheel brakes. A typical emergency braking event is described where, in this example, the left hand front wheel tends to lock. Note that the complete system is duplicated for the rear brake circuit, which remains completely independent of the front circuit.

Normal Braking

During normal braking, when the wheel speed sensors indicate no imminent wheel locking, the ABS is inactive. The solenoids are unenergised, so that the isolation valves are sprung open, and the dump valves sprung closed.

Hydraulic fluid from the master cylinder enters the modulator via the inlet port, by-passes the attenuator orifice, passes through the open isolation valve and out to the LH front wheel brake.

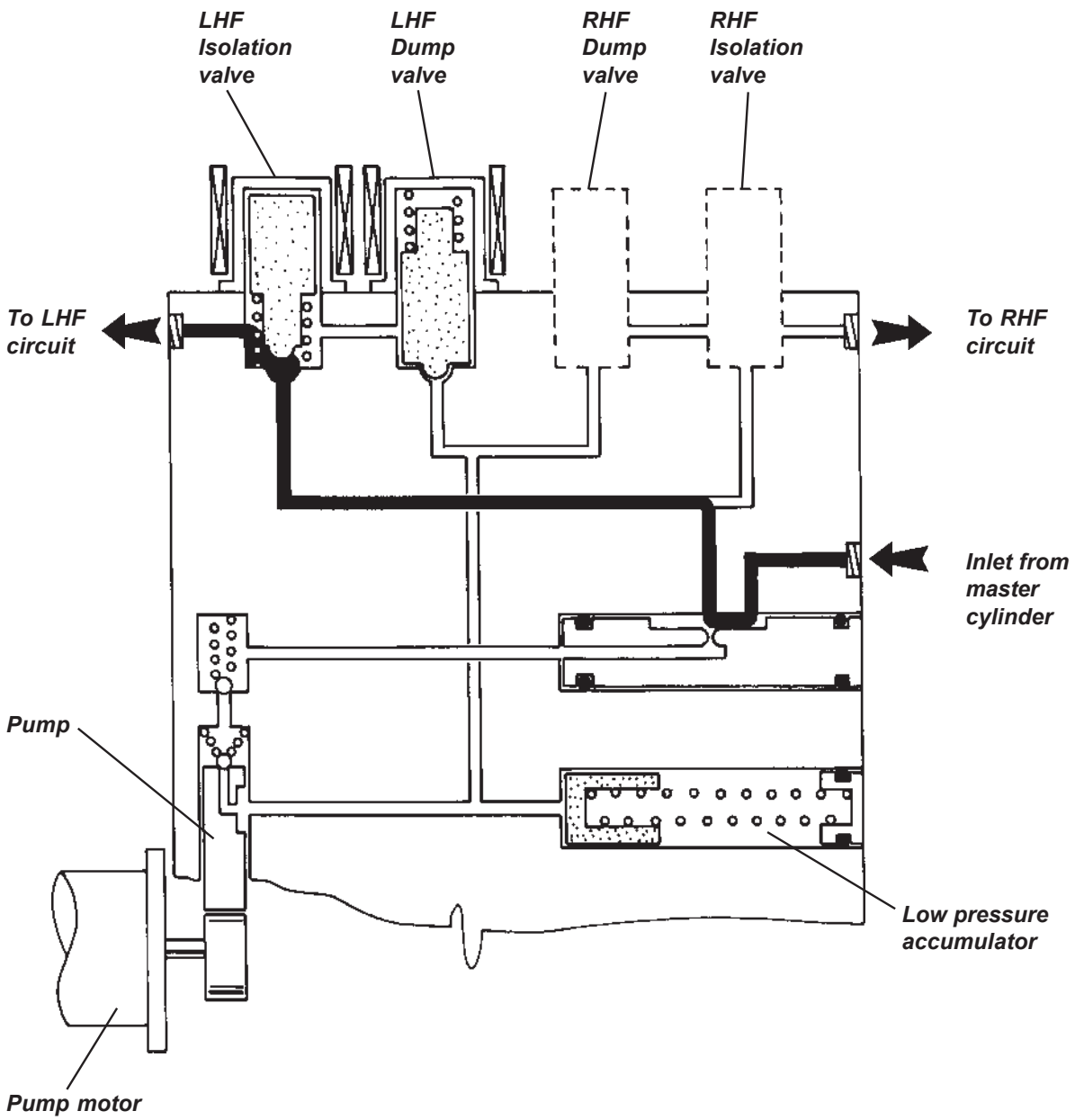

j149a

Downloaded from www.Manualslib.com manuals search engine

Pressure Isolation (Pressure Maintain)

If signals received from the wheel speed sensors indicate imminent lock up of the LH front wheel, the first step in the anti-lock sequence is to isolate that wheel brake circuit from the master cylinder. The ECM energises the isolator valve solenoid, which closes the valve against spring pressure and maintains existing pressure in the left hand front brake circuit regardless of any increase in pedal pressure.

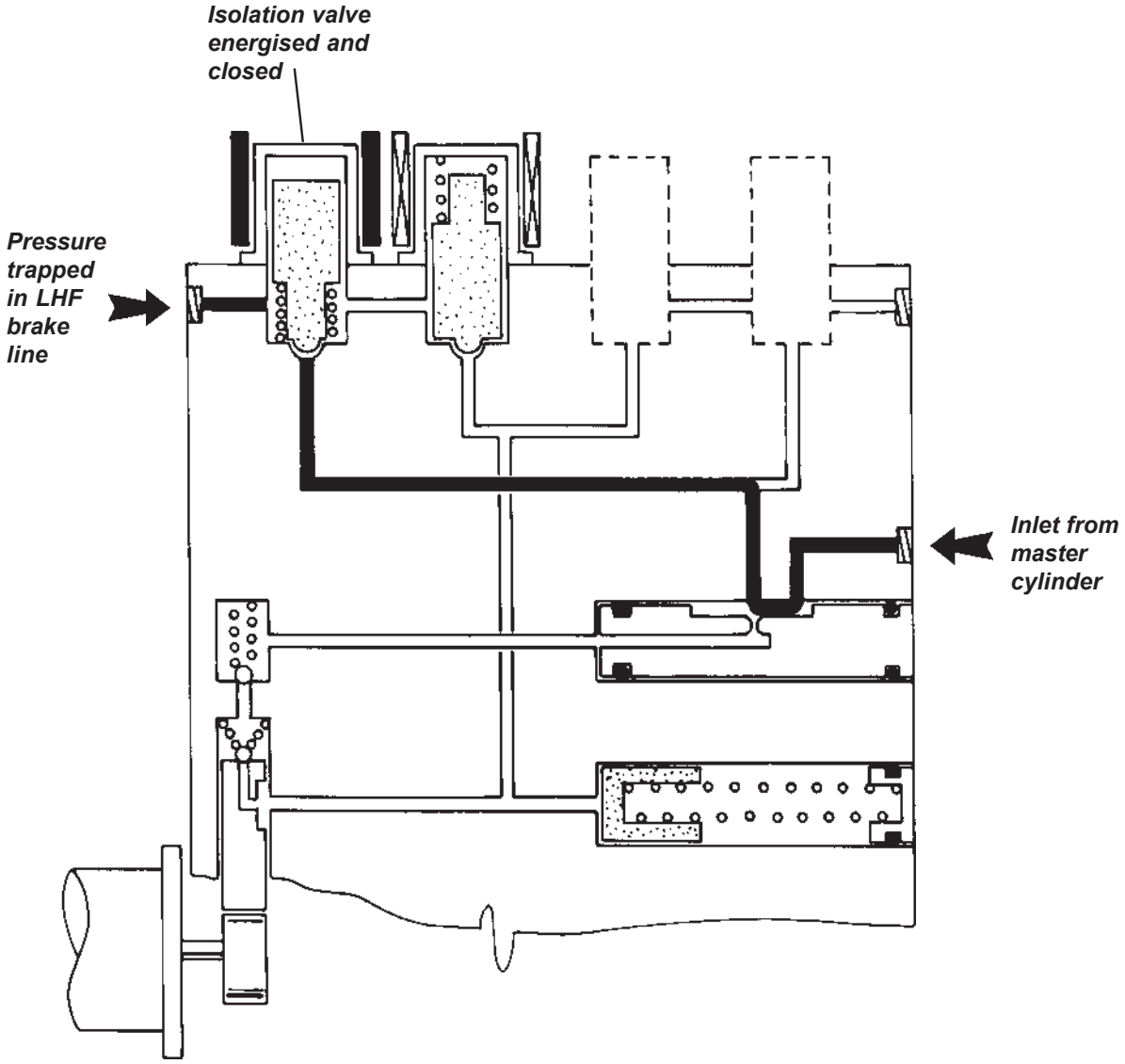

j149b

Downloaded from www.Manualslib.com manuals search engine

Pressure Reduction

Once the LH front wheel brake circuit has been isolated from the master cylinder, the pressure must be reduced in order to allow wheel speed to be restored. This pressure reduction is achieved by the ECM energising the dump valve solenoid, which then opens against spring pressure and bleeds off some of the fluid into the low pressure accumulator shared with the RH front circuit. Very short activation pulses are used to maintain close control of the pressure reduction, and to limit the reduction to that required to restore wheel speed. Fluid displaced from the wheel brake circuit is stored in the front brake accumulator against spring pressure, and is also used to prime the hydraulic pump.

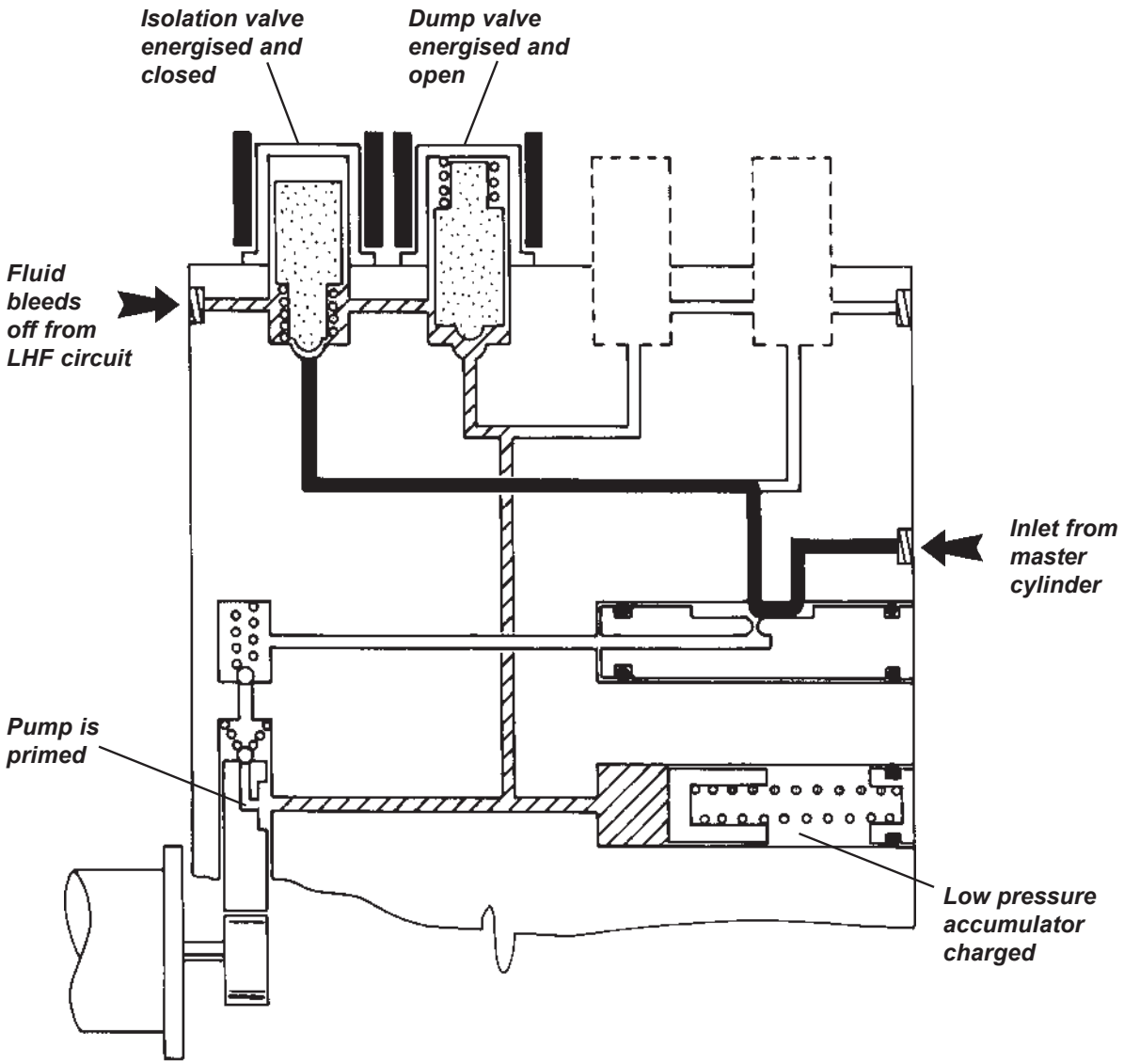

j149c

Downloaded from www.Manualslib.com manuals search engine

Pressure Increase (Re-apply)

As soon as imminent wheel lock is detected by the ECM, and the ABS control system is activated, the pump motor is energised. When the dump valve is opened, and fluid is allowed to bleed off from the wheel brake circuit into the low pressure accumulator, this fluid is scavenged by the pump and returned back into the input circuit through an attenuator orifice. This action is the origin of the 'pedal pushing back' sensation felt by the driver, with the pressure pulsations from the pump damped and quietened by the restriction of the orifice. When wheel speed has been restored and the brake pressure is required to increase, the isolation valve is momentarily opened, to allow master cylinder/pump pressure to raise the pressure in the wheel brake circuit in increments. If imminent locking is again sensed, the isolation valve closes, the dump valve opens and the cycle repeats, with the whole process occuring several times a second.

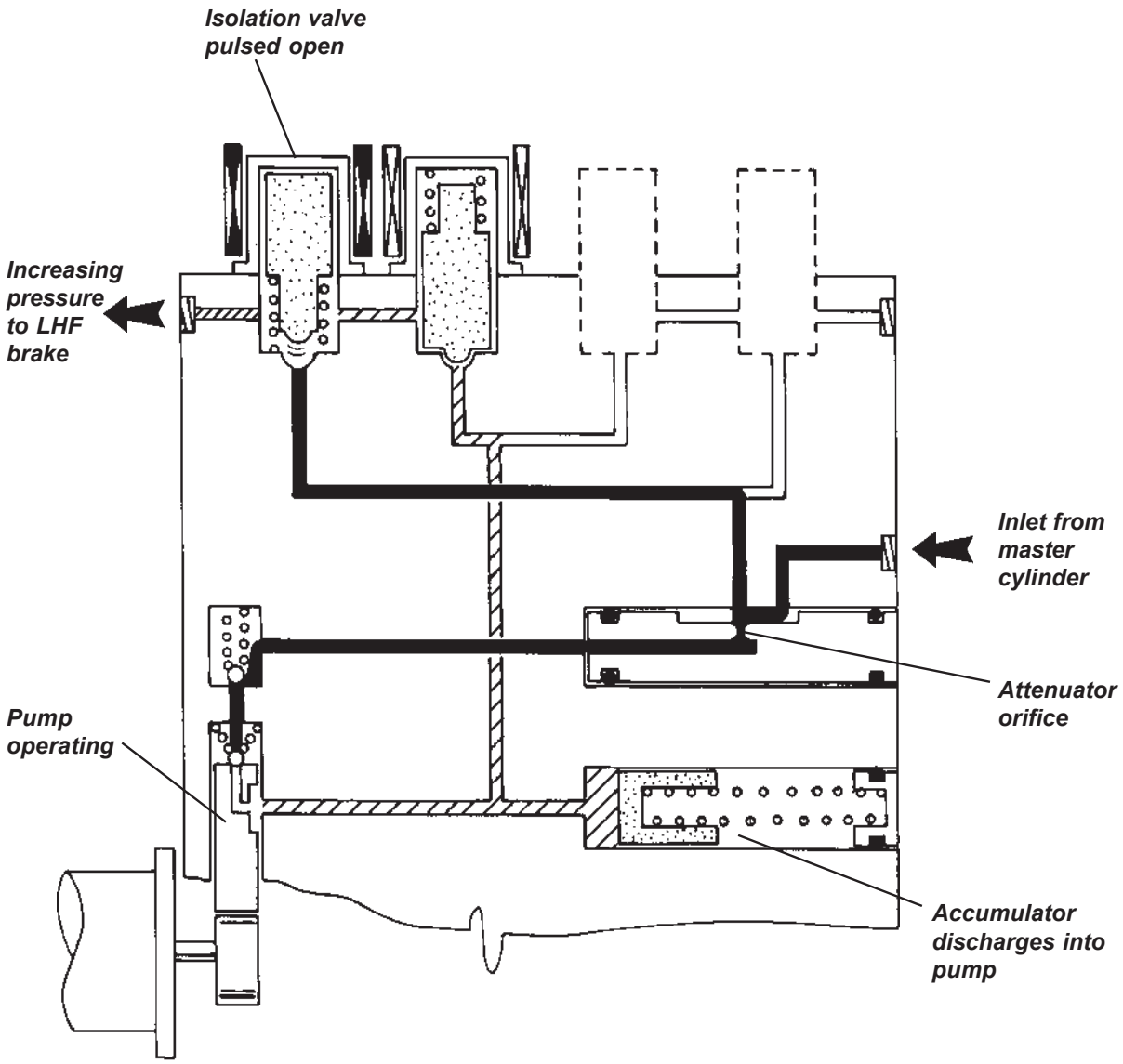

j149d

Downloaded from www.Manualslib.com manuals search engine

Brake Release

When no further wheel locking is sensed by the ECM, the ABS becomes inactive with the isolation valve open (solenoid de-energised) to allow direct communication between the master cylinder and wheel brake circuit, and the dump valve closed (solenoid de-energised) to seal off the pressure relief circuit. The pump will remain running for a short time to help drain any fluid from the accumulator, whose piston is returned to its start position under the action of the spring, and return the fluid to the master cylinder reservoir.

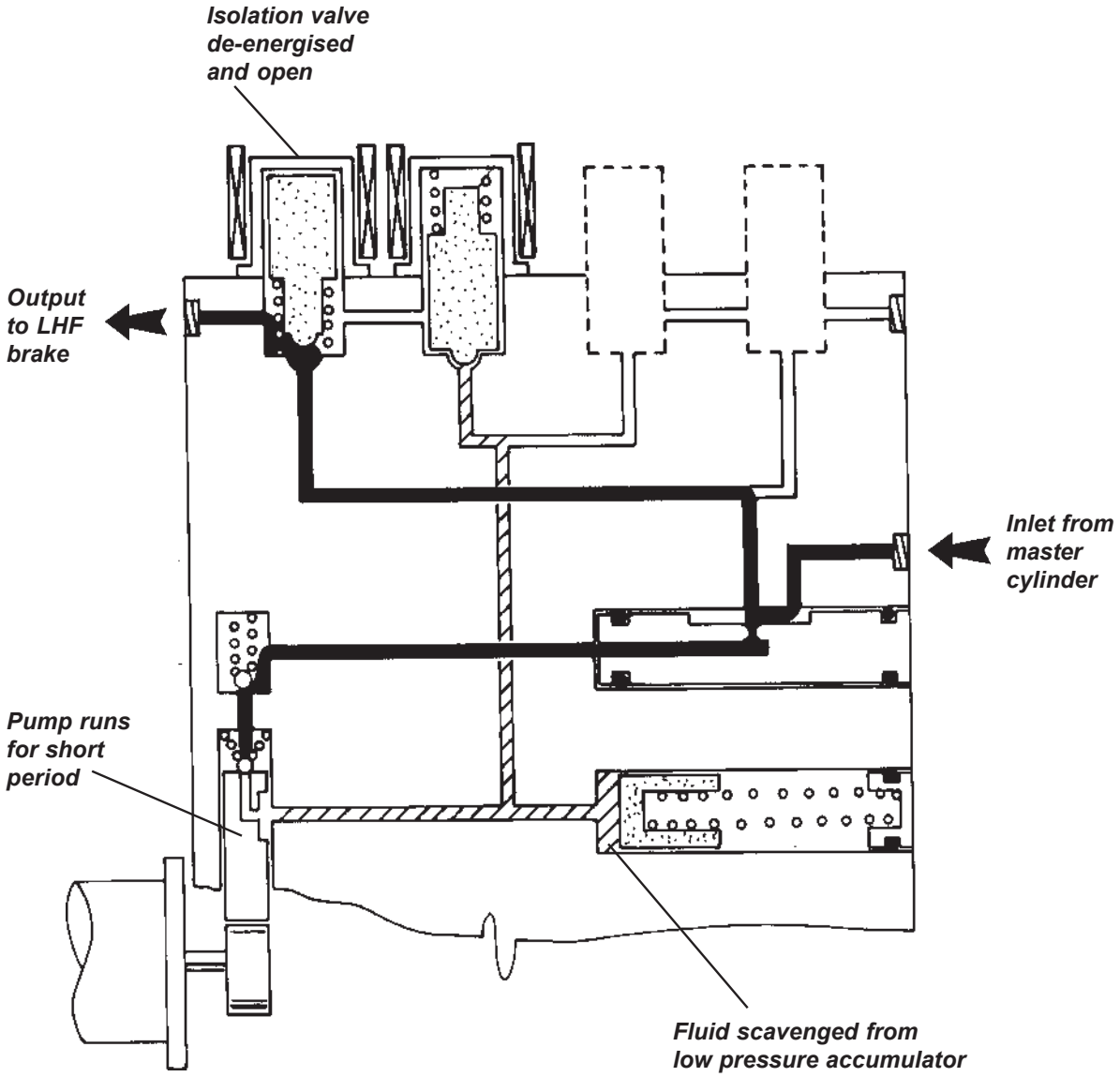

i149e

Downloaded from www.Manualslib.com manuals search engine

JJ.13 - ELECTRO-HYDRAULIC UNIT

The electro-hydraulic unit is located on the driver's side in the front services compartment, and is flexibly mounted in a support frame via three isolator rubber bushes. The support frame itself is fixed to the front suspension damper top mounting bracket and windscreen frame butress via another three rubber bobbins. A single 27 pin electrical connector plug is provided with a sliding retainer to aid its mating with the vehicle harness.

CAUTION: Do not disconnect or connect the main connector plug with the ignition switched on. Switch off the ignition and disconnect the main connector plug before carrying out any electrical welding operations on the car.

Hydraulic pipe connections to the unit comprise two input pipes from the master cylinder (one for the front circuit, one for the rear) and four output pipes, one for each of the wheel brakes. Note that all hydraulic connections are identified by engraved markings on the unit, with further protection against incorrect connection provided by the use of two different brake pipe union sizes: M10 x 1.0 and M12 x 1.0.

To Remove Electro-Hydraulic Unit

When removing the unit, beware of dripping brake fluid and take appropriate precautions to prevent damage to paintwork.

1. Remove the driver's side front access panel, radiator outlet louvre and wheelarch liner.

2. Switch off the ignition before drawing out the retainer slide from the connector plug to release the harness from the unit.

3. Label each of the hydraulic pipes before disconnecting from the unit and immediately capping the pipes and plugging the ports to reduce the spillage of brake fluid, and to prevent the ingress of dirt.

4. Release the three fixings securing the controller mounting bracket to the damper bracket and windscreen frame butress, and withdraw the unit and mounting cradle.

5. To remove the controller from the cradle, unscrew the two socket head pins supporting the sides of the unit, and withdraw the unit from the third grommet at the end of the motor casing.

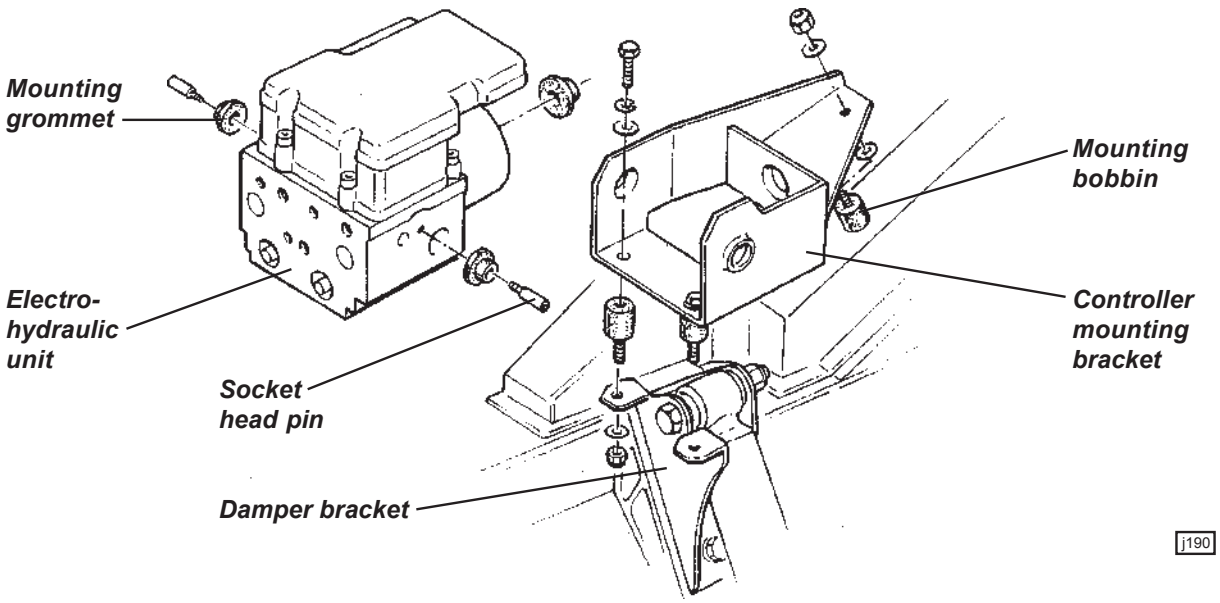

Downloaded from www.Manualslib.com manuals search engine

6. To refit, reverse the removal procedure, tightening the two socket head mounting pins to 9 Nm, and the brake pipe unions (both sizes) to 16 Nm, taking care to connect the brake pipes to the correct ports on the hydraulic block - see diagram. Press in the retainer slide to connect the harness plug.

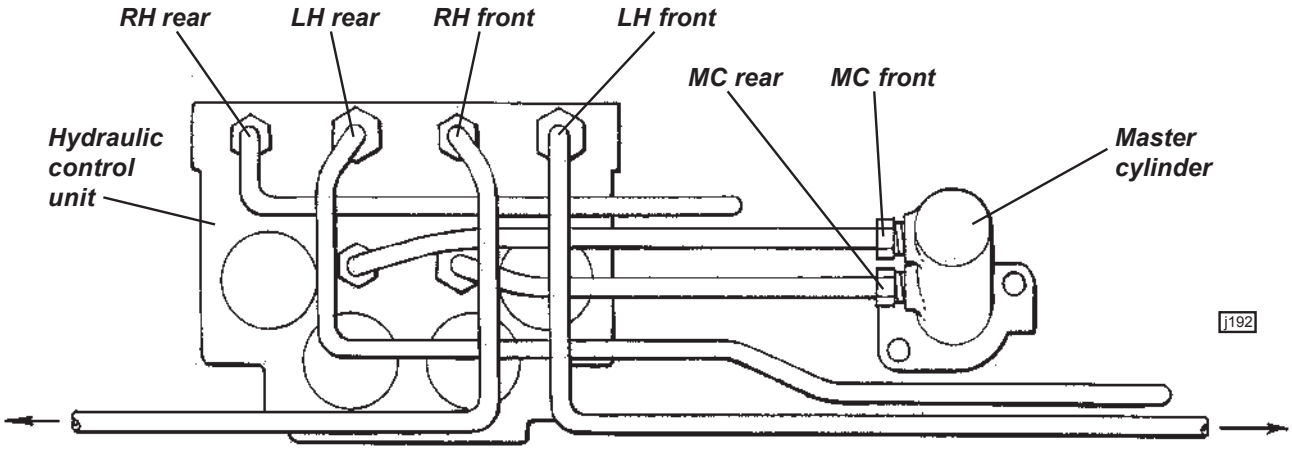

7. Bleed the unit using the procedure detailed in sub-section JJ.3.

8. Verify correct connection by using the 'Lotus Scan' tool in actuator tests with the car on a wheel free lift. Check that operation of each solenoid valve affects the appropriate wheel.

Service Breakdown of Electro-Hydraulic Unit

Service parts for this unit are limited to; the hydraulic modulator with pump motor; and the coil integrated module which comprises the ECM and solenoid pack.

To separate the module from the hydraulic block, release the 'Torx' screws and withdraw the module from the solenoid valve spigots. When refitting, check that the gasket is correctly located around the solenoid coil cluster, before mating with the hydraulic block and fitting the screws.

Note that component parts are calibrated specifically for the Lotus Elise. Do not use parts from other sources.

JJ.14 - WHEEL SPEED SENSORS

A wheel speed sensor is integrated into each of the four hub bearing assemblies and supplies a signal to the ABS control module. The module outputs a road speed signal to the engine ECM, and also to the instrument pack for speedometer operation.

Output from each wheelspeed sensor can be checked using the Scan 2 tool, and if found to be faulty or absent, the complete hub assembly should be renewed - refer to sub-section CI.5 (front) or DH.4 (rear).

JJ.15 - DATA LINK CONNECTOR (DLC)

The Data Link Connector (DLC) is a 16 terminal electrical connector plug, complying with SAE J 1962, which provides a means of communication with the ABS and engine management electronic control units. The connector is used in service to connect electronic diagnostic equipment such as the 'Lotus Scan' hand held scanner tool which allows system interrogation including the reading of trouble codes.

The DLC is either tied to the main harness at the front of the passenger footwell, or secured to the centre underside of the scuttle beam.

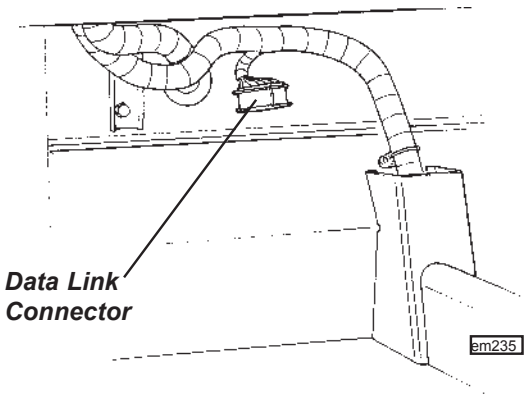

Downloaded from www.Manualslib.com manuals search engine

JJ.16 - SPECIAL TOOLS

Retraction Tool, Rear Calliper Piston T000T1242

Used to retract the rear calliper pistons and enable fitment of new brake pads.

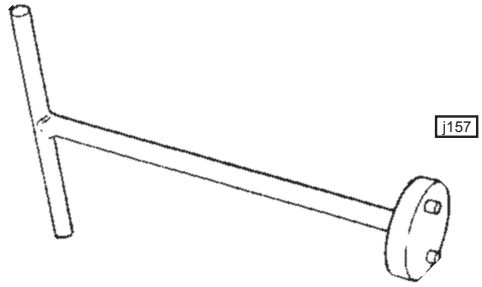

Lotus Scan Tool T000T1418F

In order to provide for communication with the engine management system electronic control module, a hand held electronic scanner 'Lotus Scan' (part number T000T1418F), may be plugged into a special 16 terminal harness connector socket, known as a Data Link Connector (DLC), located at the front of the passenger footwell. Note that this tool may also be used on previous Elise models (excluding Exige '00 M.Y, 340R and 160 models).

Amongst the operations available using the 'Lotus Scan' tool are:

- Clear fault codes
- View fault codes/wheel speeds/valve activities
- Generate valve/motor activities
- Read EEPROM contents
- Read ECU identification

Operating instructions are provided with the tool.

Important Note

The power supply transformer is used for overnight charging of the printer, and also for powering the Lotus Scan tool during software downloading from a PC (personal computer). For the software download operation, the Scan tool requires a power supply from the mains via the transformer and an inverter. Two types of inverter have been used; early kits used an adaptor lead to plug into the bottom end of the Scanner tool. Later kits use an adaptor plug fitting into the top end of the scanner.

When charging the printer, **it is most important that the inverter is NOT used**, or damage to the transformer may be caused. Incorrect connection is possible only with the early type adaptor lead, with which extra care should be exercised.

1. **Reading data from vehicle**

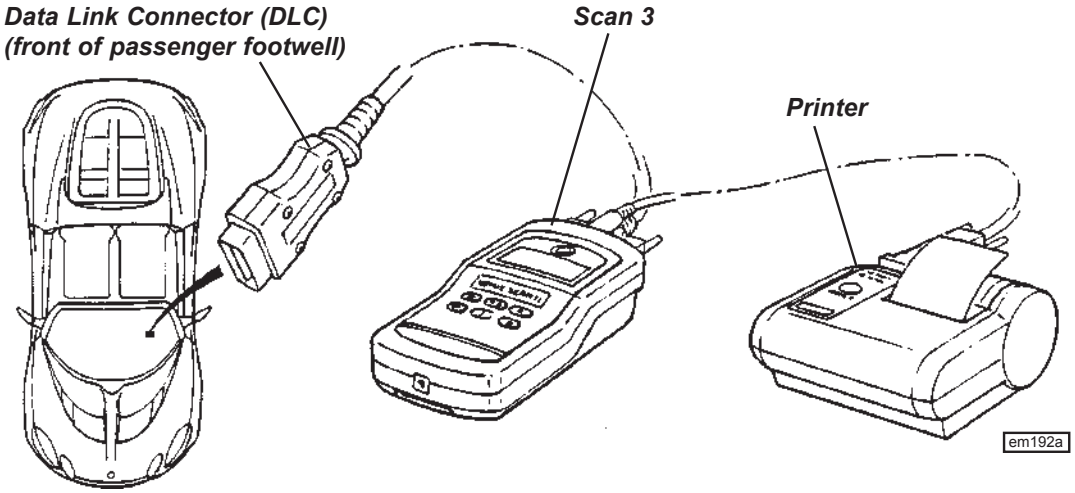

Downloaded from www.Manualslib.com manuals search engine

2. **Downloading software from P.C.**

With early type adaptor lead

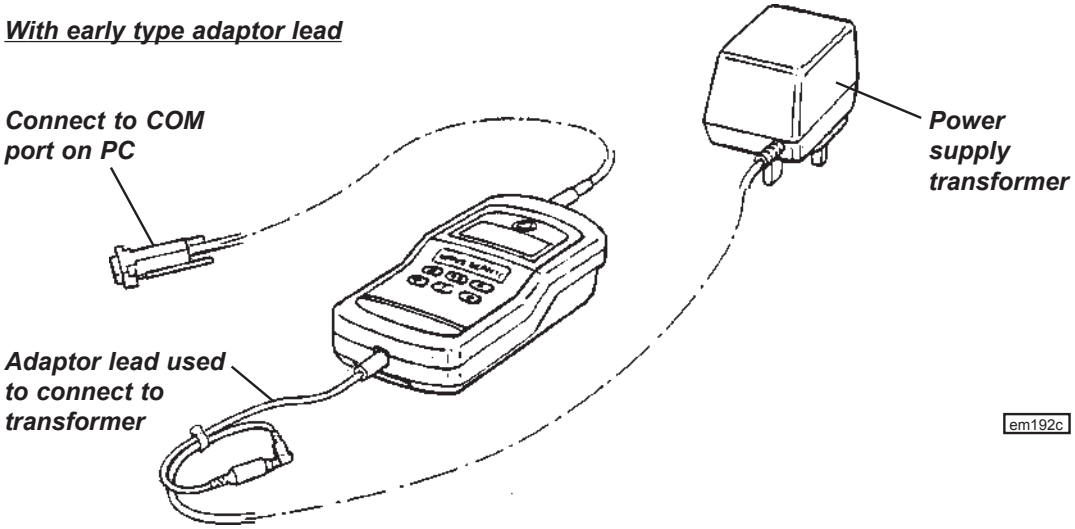

With later type adaptor

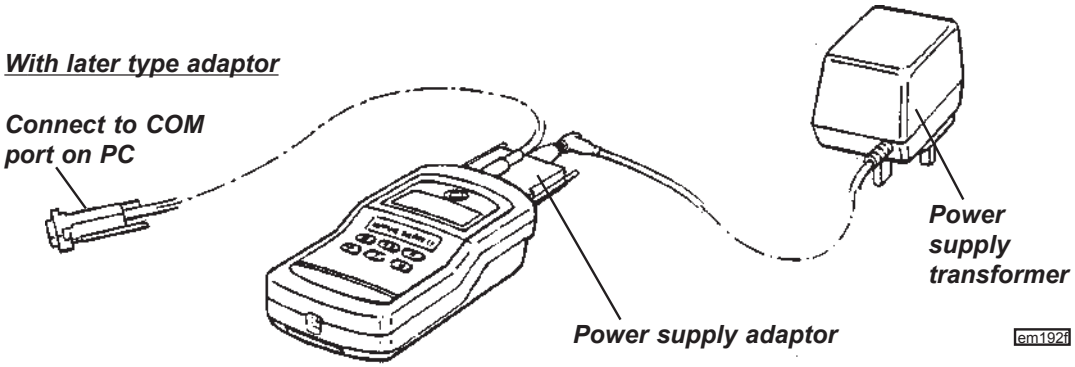

3. *Charging printer*

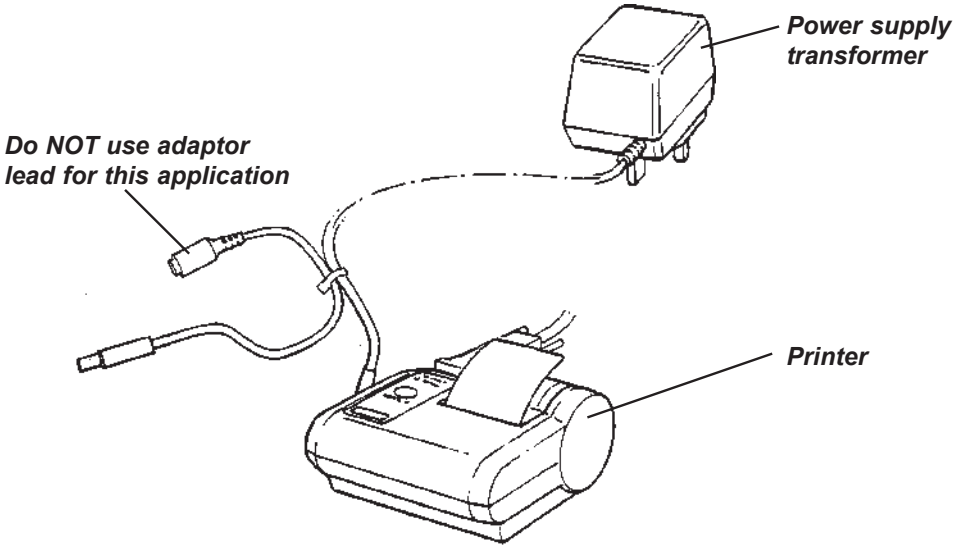

Downloaded from www.Manualslib.com manuals search engine

JJ.17 - 'LOTUS SCAN' CHECKING PROCEDURES

1. Trouble Codes

When the ABS controller detects a fault in the system, the following events occur;

i) The ABS tell tale is lit;
ii) The anti-lock system is switched out;
iii) A trouble code is stored in the non volatile random access memory i.e. memory which is retained when the power supply is interrupted, or the battery disconnected.

Trouble codes may be either Condition Latched, or Ignition Latched:

Condition Latched; With this type of fault, which is generally low or high voltage, the ABS tell tale will light, and the anti-lock system switch out, until such time as conditions return to normal, at which point the light will be extinguished, and the anti-lock be reinstated. The trouble code will be stored only whilst the fault is present.

Ignition Latched; This type of fault, of which are most categories, will cause the tell tale to be lit and the anti-lock to be inhibited until such time as the fault is no longer detected at the moment of a subsequent switching on of the ignition. At this point, the lamp will be extinguished, and the ABS restored, but the trouble code will be retained in the memory for the next 20 drive cycles i.e. ignition switched on and a minimum road speed of 5 mph attained.

Access to the diagnostic codes is available only by using the 'Lotus Scan' tool connected to the DLC (see JG.15). The 'Lotus Scan' is a hand held electronic scanner tool with an LCD display panel which is able to display any stored trouble codes and sensor readings as well as allowing manual operation of actuators.

The facilities available include:

- View fault codes/wheel speeds/valve activities
- Clear fault codes
- Generate valve/motor activities
- Read EEPROM contents
- Read ECU identification

Important Notes

- Whenever the Lotus Scan tool is connected, the ABS tell tale is lit and the anti-lock function is inoperative.
- Never connect or disconnect the DLC to/from the control unit with the ignition switched on.
  - Before charging or quickcharging, disconnect the battery from the vehicle electrical system.
- Never disconnect the battery from the vehicle electrical system with the engine running.
- Never use a quick-charger for starting.
- Take care when touching energised parts of the ignition system.
- ECMs must be removed prior to welding operations, or subjecting to oven temperatures above 80°C.
- When voltage testing, use only a high-resistance type meter.
- During test steps which involve the connection of contacts from harness plugs or control units with ground or battery voltage (+12V), exercise great care as incorrect contact can cause permanent damage to the ECM internal circuits.
- When measuring resistance from ground bearing wires to vehicle ground, the nominal value of 'less than 2 ohms' sometimes cannot be achieved. In this case, disconnect the negative (ground) post of the battery and measure the resistance to the vehicle earth lead.
- Always erase trouble codes from any control unit after a test is done.

Downloaded from www.Manualslib.com manuals search engine

2. Abbreviations & Definitions

BATTERY VOLTAGE	System voltage
BRAKE LIGHT SW.	Brake light switch
FL WHEEL SPEED	Front left wheel speed
FR WHEEL SPEED	Front right wheel speed
RL WHEEL SPEED	Rear right wheel speed
RR WHEEL SPEED	Rear right wheel speed
FRONT WHL SPEEDS	Front wheel speed
REAR WHL SPEEDS	Rear wheel speed
VALVE RELAY CMD	Valve relay command
VAVLE RELAY FDBK	Valve relay feedback
RETURN PUMP CMD	Return pump command
RETURN PUMP FDBK	Return pump feedback
FL HOLD SOL. CMD	Front left solenoid hold command
FL HOLD SOL. FDBK	Front left solenoid hold feedback
FL REL. SOL. CMD	Front left solenoid release command
FL REL. SOL. FDBK	Front left solenoid release feedback
FR HOLD SOL. CMD	Front right solenoid hold command
FR HOLD SOL. FDBK	Front right solenoid hold feedback
FR REL. SOL. CMD	Front right solenoid release command
FR REL. SOL. FDBK	Front right solenoid release feedback
RL HOLD SOL. CMD	Rear left solenoid hold command
RL HOLD SOL. FDBK	Rear left solenoid hold feedback
RL REL. SOL. CMD	Rear left solenoid release command
RL REL. SOL. FDBK	Rear left solenoid release feedback
RR HOLD SOL. CMD	Rear right solenoid hold command
RR HOLD SOL. FDBK	Rear right solenoid hold feedback
RR REL. SOL. CMD	Rear right solenoid release command
RR REL. SOL. FDBK	Rear right solenoid release feedback

3. ECU Identification

The ECU identification number for the Elise/Exige is: A120J6000F

Supplier ECU Hardware Number: EBC 430

Supplier ECU Software Number: LCFWDQ04K2K

Downloaded from www.Manualslib.com manuals search engine

4. Circuit Diagram

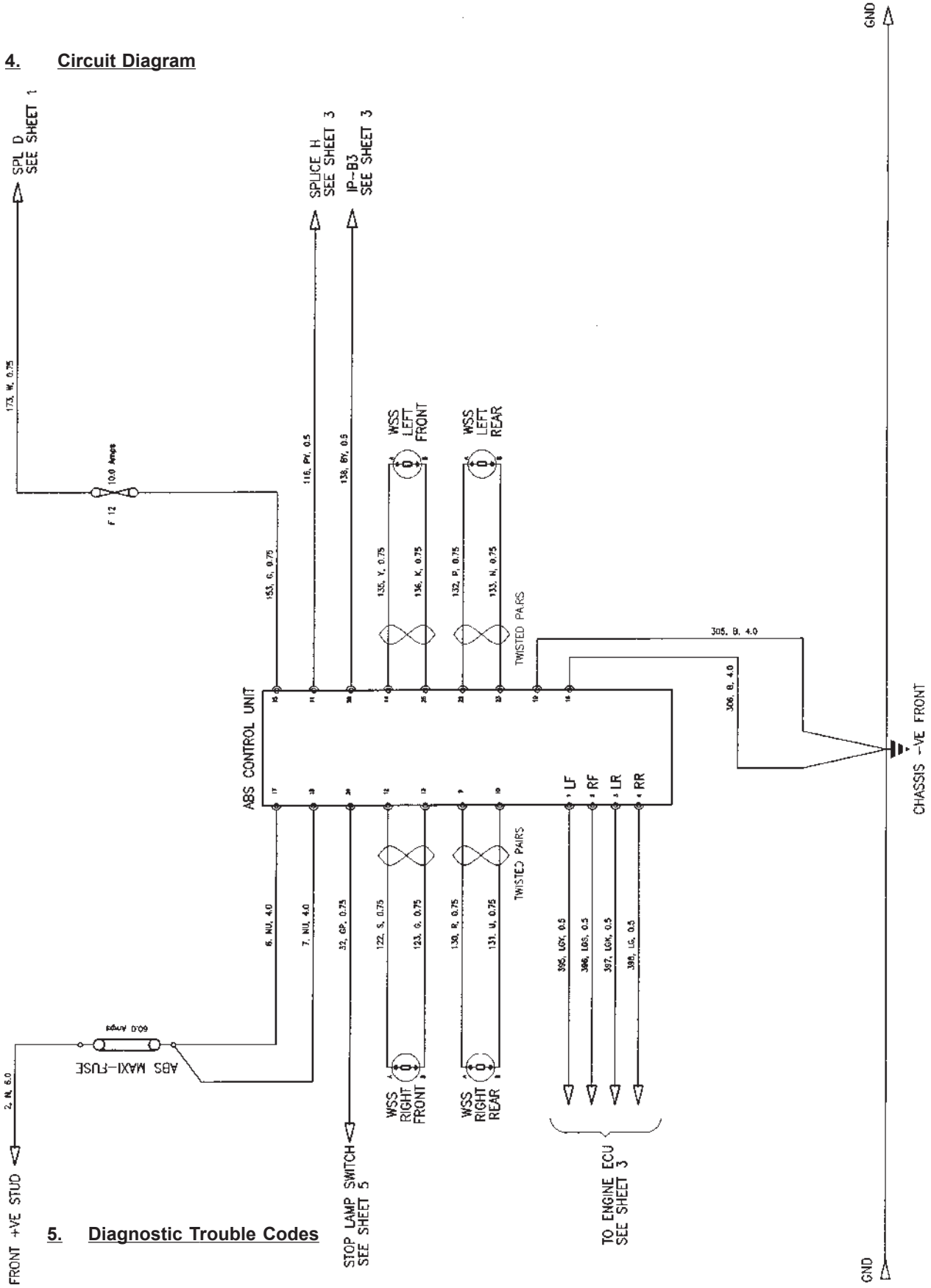

5. Diagnostic Trouble Codes

Downloaded from www.Manualslib.com manuals search engine

DTC	Diagnostic Trouble Code Storage Condition	Remedy
C0035	Front left wheel speed sensor: Short circuit or circuit open;	C-04
	No signal;	C-04
	Incorrect signal;	C-04
C0040	Front right wheel speed sensor: Short circuit or circuit open;	C-05
	No signal;	C-05
	Incorrect signal;	C-05
C0045	Rear left wheel speed sensor: Short circuit or circuit open;	C-06
	No signal;	C-06
	Incorrect signal;	C-06
C0050	Rear right wheel speed sensor: Short circuit or circuit open;	C-07
	No signal;	C-07
	Incorrect signal;	C-07
C0060	Front left outlet solenoid valve circuit malfunction;	C-12
C0065	Front left inlet solenoid valve circuit malfunction;	C-12
C0070	Front right outlet solenoid valve circuit malfunction;	C-12
C0075	Front right inlet solenoid valve circuit malfunction;	C-12
C0080	Rear left outlet solenoid valve circuit malfunction;	C-12
C0085	Rear left inlet solenoid valve circuit malfunction;	C-12
C0090	Rear right outlet solenoid valve circuit malfunction;	C-12
C0095	Rear right inlet solenoid valve circuit malfunction;	C-12
C0110	Return pump: circuit open or shorted;	C-10
	locked or shorted;	C-10
C0121	Valve relay circuit malfunction;	C-09
C0161	Brake light switch fault;	C-11
C0232	Brake system telltale voltage: high or open circuit;	C-13
	low;	C-13
C0245	Wheel speed: sensor erratic signal;	C-08
C0245	error;	C-08
C0252	Replace electronic control unit;	C-02
C0550	Replace electronic control unit;	C-02
C0550	Brake system or electronic control unit malfunction;	C-12
C0556	Replace electronic control unit;	C-02
C0561	Replace electronic control unit;	C-02
C0563	Replace electronic control unit;	C-02
C0564	Replace electronic control unit;	C-02
C0800	Switched battery voltage: high (valve relay)	C-03
	low (valve relay)	C-03

For remedial procedures, see Lotus Scan tool display.

Downloaded from www.Manualslib.com manuals search engine

FROM '06 M.Y.

Introduced for the 2006 model year, was electronic throttle control (ETC), which dispensed with the mechanical throttle cable linking the accelerator pedal to the throttle body. The 'drive by wire' throttle actuation uses a throttle pedal fabricated from steel rod which is pivotted in a plastic housing bolted to the pedal box. The plastic housing incorporates two pedal position potentiometers operated by rotation of the pedal pivot, and provide signals to the engine ECU, which then interprets driver commands allied to emission and engine management requirements, and drives the throttle butterfly stepper motor to the appropriate position, or rate of change of position.

Other changes to the pedal box include fabricated steel, silver painted brake and clutch pedals fitted with alloy pedal pads. Some markets, principally Canada, are fitted with a pedal actuated 'clutch down' switch to inhibit engine cranking unless the clutch pedal is fully depressed.

The throttle pedal assembly may be removed by disconnecting the harness plug from the module and releasing the three M8 bolts and nuts securing the unit to the pedal box.

- The throttle pedal upstop is set internally within the electronic housing, with a downstop moulded into the housing itself.
- The brake pedal is pulled 'off' by an extension spring anchored to a bracket rivetted to the scuttle beam.
- There is normally a gap of approximately 3mm between the brake pedal and the pedal box upstop flange with the pedal released. If preferred, the brake pedal can be raised slightly by adjusting the effective length of the pushrod at its connection to the clevis, but the master cylinder must never be preloaded, i.e. there must always be a small clearance between the pedal and upstop bracket to ensure that the master cylinder piston is allowed fully to return and open the reservoir port.
- After any adjustment, tighten the clevis locknut and check operation of the brake light switch.
- The clutch pushrod uses an integral plastic clevis to connect to the pedal and control the pedal up position as the master cylinder tops out. A downstop buffer is provided on the pedal box flange.

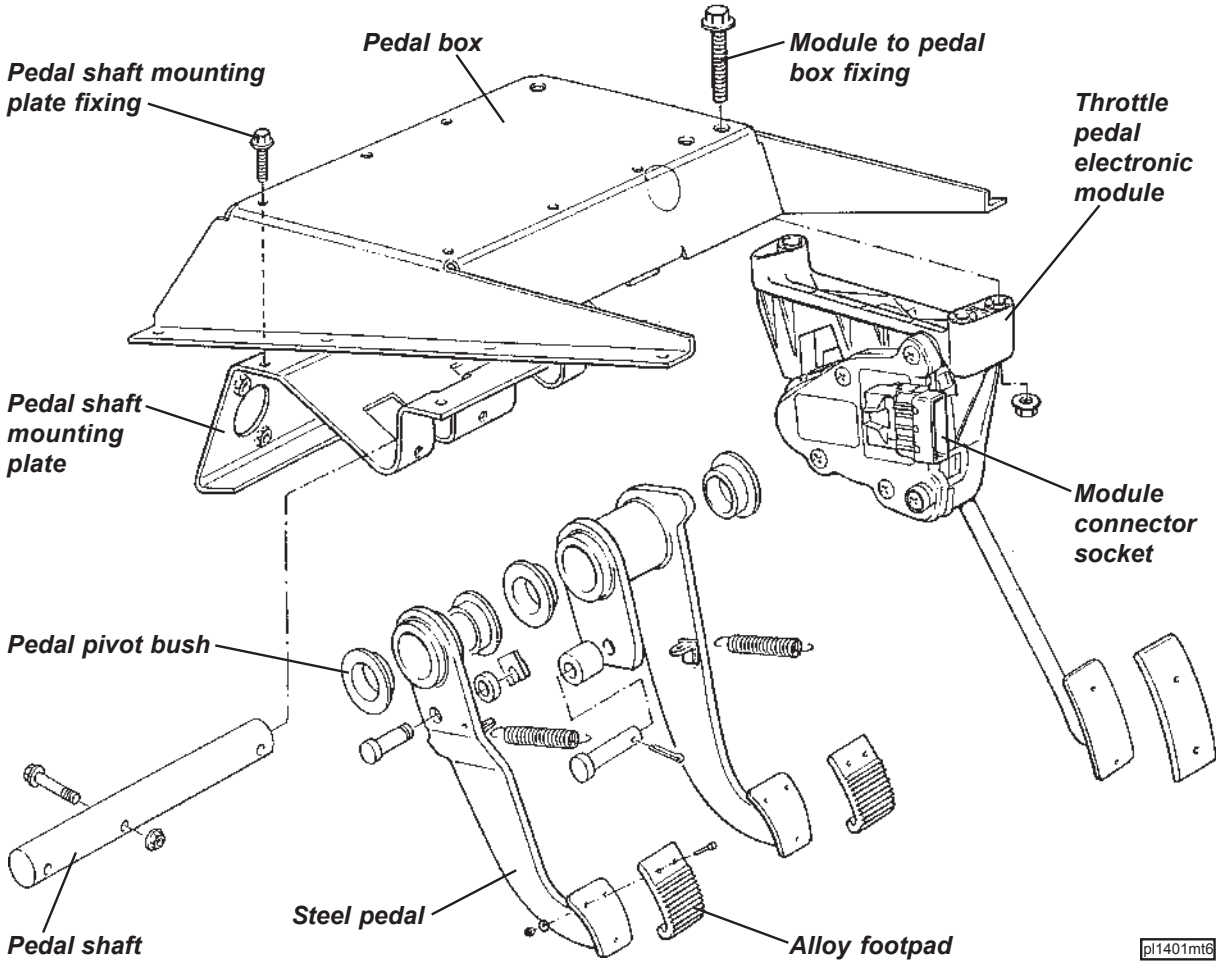

Downloaded from www.Manualslib.com manuals search engine

JJ.8A - '08 MODEL YEAR UPGRADE OPTION

Introduced as an option for some '08 models, is an uprated front brake kit, comprising 4-piston front callipers, larger diameter front discs and steel braided hoses.

Front Callipers:

At each front corner, the A.P. Racing, alloy, 4-piston front calliper is radially mounted to the front hub carrier via an alloy adaptor bracket. Two reduced head capscrews secure the adaptor bracket to the hub carrier, with two capscrews with washers securing the calliper to the adaptor. Two retaining pins are used to locate the Pagid RS14 brake pads, and also secure an anti-rattle spring plate which incorporates a direction of rotation arrow.

Torque figures: Adaptor to hub carrier; 58 Nm. Calliper to adaptor; 58 Nm. Caliper bleed screw; 17 Nm.

Front Discs:

The front discs are increased in diameter from 288mm to 308mm, and are cooled by internal curved vanes which trail the normal direction of rotation, to result in distinct RH and LH components. Each disc is mounted to its hub via an adaptor 'bell' from which it should not be separated under normal circumstances. Torque of disc to bell mounting bolts; 14 Nm. Note that these discs are fitted only on the front, with standard discs on the rear.

New thickness of the front discs is 26.00mm; minimum service thickness 25.00mm

Wheel bolts:

In order to provide sufficient clearance between the 4-piston brake callipers and all road wheel options, the thickness of the disc mounting bell at the hub face is increased from the standard 7mm disc thickness to 11mm. This requires the use of 2mm longer wheel bolts (C117G6000F) to maintain sufficient thread engagement. To reduce the possibility of incorrect fitment, both front and rear wheels are secured with the longer bolts, with no coded security bolts fitted. Note that these bolts use the standard spline type socket heads, but have a reduced outside diameter of the head.

Standard bolt;	B117G6000F	26mm thread length	Head outside diameter: 22mm
Long bolt;	C117G6000F	28mm thread length	Head outside diameter: 19mm

Braided hoses:

The steel braided front hoses are connected to the front callipers using a banjo fitting tightened to 25 Nm.

Downloaded from www.Manualslib.com manuals search engine

ENGINE COOLING

SECTION KH

	Sub-Section	Page
General Description	KH.1	3
Maintenance	KH.2	3
Drain/Refill Procedure	KH.3	4
Radiator & Cooling Fan	KH.4	5
Radiator Fan Control	KH.5	7
Radiator Feed & Return Pipes	KH.6	8
Water Pump & Thermostat	See Section EH	
Oil Coolers	KH.7	8

Downloaded from www.Manualslib.com manuals search engine

Coolant Flow Circuits

Thermostat closed

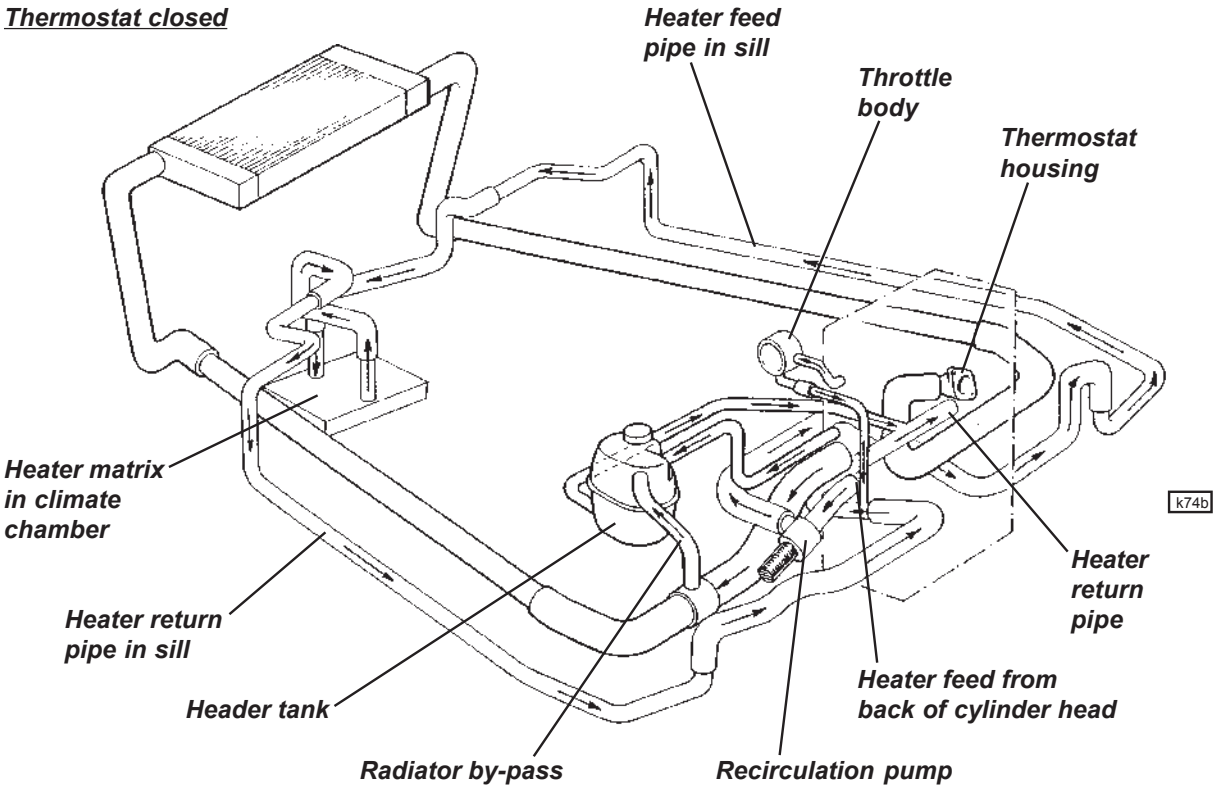

Thermostat open

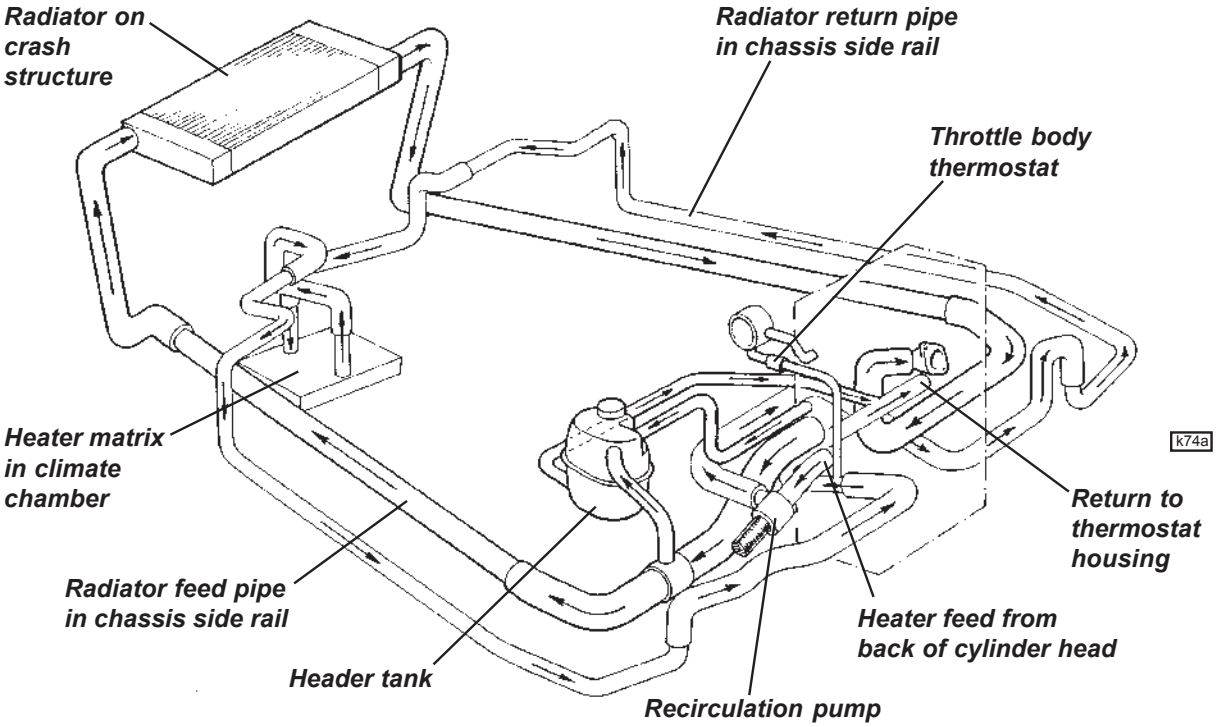

Downloaded from www.Manualslib.com manuals search engine

KH.1 - GENERAL DESCRIPTION

The engine cooling system comprises an engine driven water pump, a front mounted radiator with electric cooling fan(s), a header tank, re-circulation pump and associated ducting, pipework and controls.

The centrifugal water pump is mounted on the front face of the cylinder block, and is driven by the smooth 'back' side of the multi-rib auxiliary drive belt. Water is discharged from the pump into the front of the cylinder block, around the cylinder liners and up into the cylinder head, before exiting the engine via an outlet spigot on the rear of the head.

Radiator open circuit:

From the main outlet on the rear face of the cylinder head, a moulded hose connects with the main radiator feed pipe which runs inside the left hand chassis side rail, before feeding the front mounted radiator. The engine cooling radiator is of aluminium construction with plastic end tanks and is horizontally mounted on top of the glass fibre composite 'crash structure' which also serves as a duct to direct airflow from the body nose air intake, to the underside of the radiator. Twin 100 mm diameter electric cooling fans are fitted to the underside of the radiator to supplement, when required, the ram air flow, and a moulded deflector panels direct air exhausting from the top of the radiator through outlet grilles in the front bonnet. On cars equipped with air conditioning, the condenser is sandwiched between the radiator and crash structure, with the cooling fans attached to underside of the condenser.

The right hand, outlet spigot on the radiator feeds a return pipe routed down the inside of the chassis right hand side rail, which is then connected to the thermostat housing on the left hand side of the block. Coolant flowing through the open thermostat enters the water pump to commence another circuit.

Heater circuit:

A second outlet spigot on the rear of the head is used to supply the heater circuit. Water flows via a re-circulation pump, into an aluminium pipe routed along the outside of the right hand chassis siderail, within the composite sill member. The front end of this pipe rises over the end of the scuttle, penetrates the plenum/scuttle baffle panel, and connects to the heater matrix mounted in the chassis front climate chamber. The heater return circuit is similarly routed along the left hand side of the chassis, to join a steel heater return pipe at the back of the cylinder head, and running beneath the inlet manifold to the underside of the thermostat housing.

In conditions of 'heat soak', after stopping a hot engine, the re-circulation pump is energised under engine ECU control to pump coolant through the heater circuit and limit the potential for localised boiling within the cylinder head.

Radiator by-pass circuit:

When the thermostat is closed, the radiator return circuit is shut off, and coolant leaving the cylinder head is forced to flow through a by-pass circuit which links the engine outlet hose to the header tank and then to the heater return pipe.

Header tank:

The top RH spigot on the header tank is connected to an air bleed on the back of the cylinder head; the top rear spigot to the engine outlet hose; and the bottom port to a hose joining the heater return pipe immediately before its termination at the thermostat housing.

Throttle body and oil/water heat exchanger

The throttle body is water heated to prevent icing, drawing a supply from the back of the cylinder head, and returning via an in-line thermostat, into the heater return pipe. On cars not fitted with front mounted air/oil coolers, an oil/water heat exchanger is sandwiched between the oil filter and cylinder block. Coolant is fed from a water jacket spigot on the left hand side of the cylinder block into the exchanger, with the outlet pipe connecting into the heater return pipe.

KH.2 - MAINTENANCE

Under normal operating conditions, the engine cooling system, being a closed circuit, should not require any topping up between services. As a precaution however, every week, the level of coolant in the engine cooling header tank should be checked. The header tank is mounted at the left hand side of the engine bay, with a hose from its underside connecting with the heater return rail near the thermostat housing. An air bleed hose connects the header tank air space with the radiator by-pass circuit and a cylinder head spigot at the front end of the inlet manifold. The tank is fitted with a 110 kPa (15 lb/in²) pressure cap to raise the boiling point of the coolant to over 120°C. The transluscent header tank is marked with both cold and hot level indicators. The

Downloaded from www.Manualslib.com manuals search engine

level of coolant will rise as the engine warms up and the coolant expands, and will fall again as it cools down.

WARNING: Do NOT remove the cap or bleed plug from the engine cooling header tank when the engine is warm, as serious scalding could result from boiling water and/or steam.

When fully cold, the level of coolant should be up to the 'cold' mark moulded on the header tank. If overfilled, the excess coolant will be ejected when the engine is warm, and if the level is allowed to fall too low, overheating may result. If necessary, top up the system using an approved coolant mixture (see below) to maintain full protection from freezing damage and corrosion.

Anti-Freeze/Corrosion Inhibitor

It is necessary that the coolant contains an anti-freeze with corrosion inhibitor to protect the engine and heat exchangers from both frost damage, and corrosion of the metallic elements. In order to protect against these dangers as well as raising the boiling point of the coolant, the Elise is factory filled with a 50% concentration of Havoline XLC, which is a mono-ethylene glycol coolant using organic acid technology (OAT) to provide increased corrosion protection compared with conventional coolant additives. A yellow label around the header tank neck identifies the coolant type used. The corrosion inhibiting carboxylic acids in the OAT coolant tend to remain in solution rather than being deposited on the internal surfaces of the cooling system, thus improving heat transfer and extending service life. Havoline XLC is the only recommended coolant product, and at 50% concentration provides freezing protection down to approximately - 40°C. Even in warm climates it is recommended that the concentration is not allowed to fall below 25%, in order to maintain full corrosion protection.

The simplest means of checking the antifreeze concentration is to measure the specific gravity (density) of the coolant at a known temperature, using a hydrometer. The following table provides a general guide:

	Density @	
Concentration	***20°C***	***60°C***
25%	1.039	1.020
33%	1.057	1.034
50%	1.080	1.057

The coolant density reflects the effective level of mono-ethylene glycol, and not the level of corrosion inhibitors present, whose effectiveness diminishes over a period of time. The coolant should therefore be renewed every 4 years to ensure optimum corrosion protection.

In areas where the tap water is extremely hard (exceeding 250 parts per million), use of this water will lead to 'furring up' of the system over a period of time. In such areas, distilled, de-ionised or filtered rain water should be used.

Radiator Fin Cleaning

At service intervals, the matrix of the engine cooling radiator should be checked for clogging by insects, leaves and other debris. If necessary, use a water jet from both above and below to clean the fins, taking care not to damage the fragile tubes or distort the finning. At the same time, check the integrity of all cooling system joints, and the condition of all flexible hoses. In snowy conditions, ensure the radiator air exit is cleared of snow before driving the car.

KH.3 - DRAIN/REFILL PROCEDURE

To drain the engine cooling system:

1. Remove the undertray from beneath the nose of the car.

2. Disconnect the radiator feed and return hoses from the front ends of the thro' chassis pipes, and collect the draining coolant. Remove the header tank cap to speed the operation.

3. Open the drain tap at the right hand rear of the cylinder block.

Note that draining of the heater matrix is not easily possible with the unit 'in situ', and that if draining for the purpose of coolant change, this volume should be disregarded.

Downloaded from www.Manualslib.com manuals search engine

To refill the system:

1 Refit the hoses to the feed and return pipes and close the cylinder block drain tap.

2. Remove the right hand front wheelarch liner and open the air bleed plug on the radiator outlet hose. From within the engine bay, open the air bleed plug in the heater return hose at the left hand rear of the engine bay.

3. Fill with the recommended coolant mix via the header tank and close the bleed plugs when a steady stream of coolant is expelled.

4. Start the engine and allow to idle, and periodically open the bleed plugs to allow any trapped air to be expunged. Top up the header tank when necessary, and fit the pressure cap when required to prevent overflow. When the cooling fans have cut in and then out, stop the engine and allow to cool. Recheck coolant level when fully cold.

KH.4 - RADIATOR & COOLING FAN

The aluminium cored radiator is positioned horizontally on top of the composite 'crash structure' in the front services compartment. A composite moulding is used to mount the radiator, and also, via extensions at each side, to provide a mounting point for the inside front of the clamshell wheelarch. The radiator must be removed for access to the cooling fans.

To Remove Radiator

1. Remove the front clamshell (see section BR).

2. Drain the coolant and disconnect the feed and return hoses from the radiator.

3. If the car is equipped with air conditioning, de-pressurise the system and recover the refrigerant via the service ports near the evaporator.

4. Remove the two radiator outlet air deflector panels, release all tie wraps and fixings securing wiring hanesses and pipes to the radiator mounting panel, and disconnect the radiator fan harness plugs.

5. If the car is fitted with front mounted oil coolers, disconnect the feed and return hoses from both coolers and plug all ports to limit oil spillage. Remove the mounting brackets from the coolers and crash structure.

6. Release the single fixing at the bottom of each side extension securing the mounting panel to the bottom flange of the crash structure.

7. Release the three fixings securing the back edge of the mounting panel to the vertical flange on the crash structure, and the three fixings along the front edge of the panel.

8. Withdraw the radiator mounting panel with radiator/(condenser)/cooling fans assembly.

9. Each cooling fan is secured two studs and nuts to either the radiator flange bracket, or, on a.c. cars to the condenser. The condenser is secured to the radiator lower flange by two studs at the front edge, and by two pairs of screws at the rear edge. The radiator is fixed to the mounting panel by brackets at the front and rear. Note the foam packing used between the radiator and mountign panel to ensure that all ducted air flows through the radiator matrix.

10. Refit the radiator in reverse order to removal, ensuring that the foam packing is re-installed. Refill with coolant and bleed as detailed in sub-section KH.3. Re-charge refrigerant system.

Downloaded from www.Manualslib.com manuals search engine

Radiator Mounting

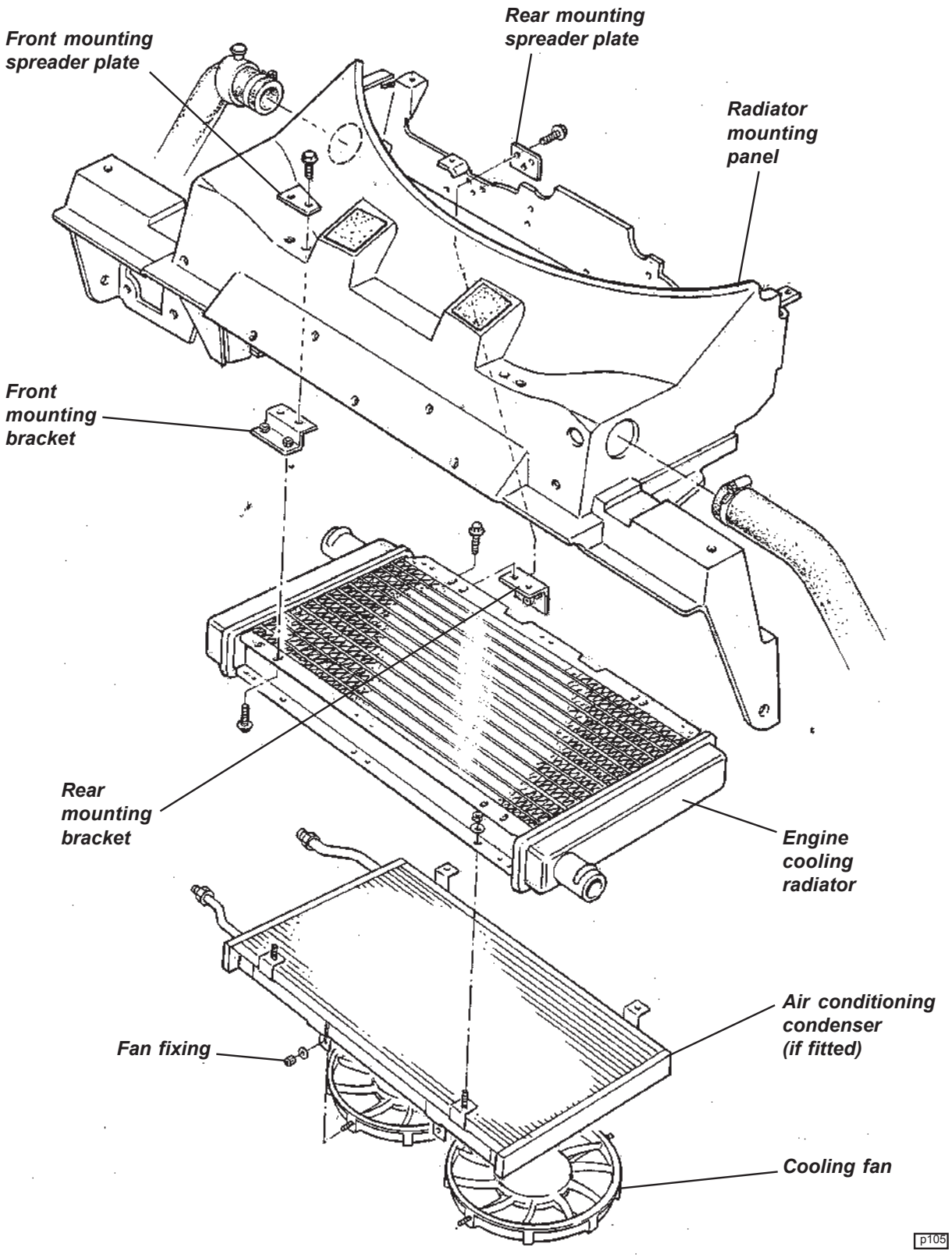

Downloaded from www.Manualslib.com manuals search engine

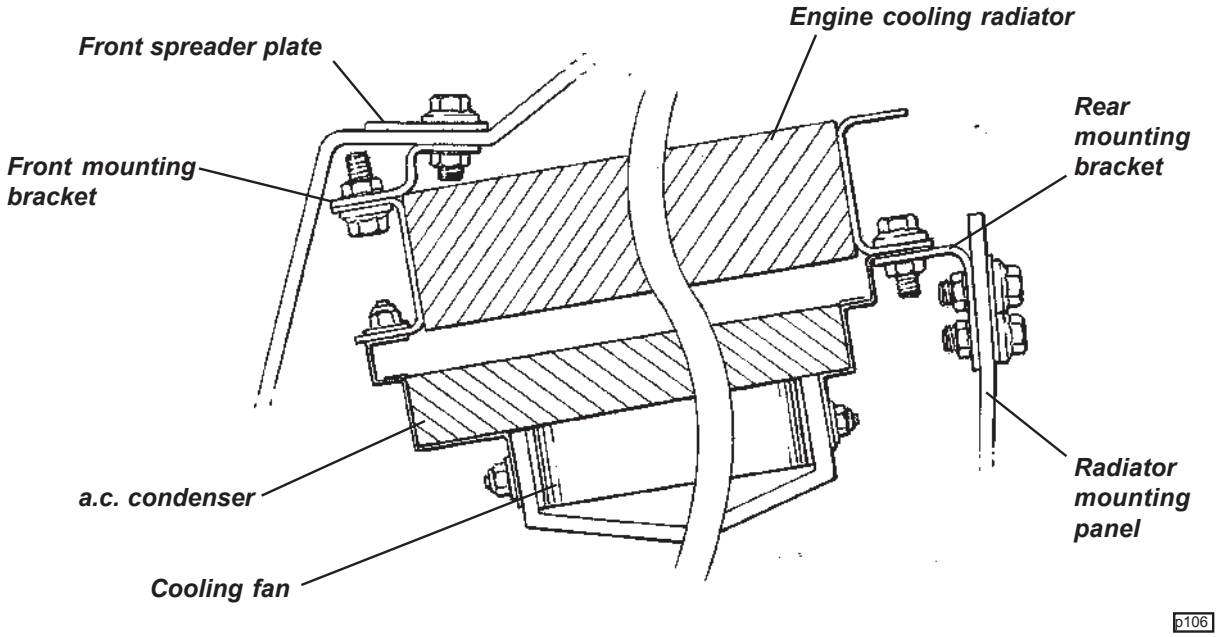

KH.5 - RADIATOR FAN & RE-CIRC. PUMP CONTROL

The two cooling fans are fitted beneath the radiator or (with a.c.) condenser/radiator package, and the coolant re-circulation pump is mounted below the header tank. Both the fans and pump are controlled by the engine management ECU using data provided by the engine coolant temperature sensor mounted in the back of the cylinder head.

The cooling fans are switched as a pair, and will operate at half speed (connected in series) when coolant temperature reaches 98°C on rise, and switch off at 94°C on fall. The fans will also operate at half speed irrespective of coolant temperature if the a.c. is switched on and the compressor is running. If coolant temperature rises to 103°C, the fans will switch to full speed (connected in parallel), reverting to half speed at 98°C.

The fans will also run at half speed, unless high coolant temperature dictates otherwise, when the a.c. is switched on and the compressor is running, or if the engine management system detects a fault with the inlet air temperature or coolant temperature circuits.

At road speeds in excess of 85 mph (135 km/h), equating to the fan stall speed, all fan functions are switched off.

Heat Soak

In order to help control engine temperature after switching off an engine whose temperature is over 88°C, the ECU will remain powered for a period of 20 minutes to allow heat soak management.

A coolant re-circulation electric pump is mounted below the coolant header tank and is plumbed into the heater supply line. When energised, the pump circulates coolant through the engine and heater system, drawing coolant from the back of the cylinder head, and pumping it through the heater matrix to the heater return pipe and back into the thermostat housing. The pump functions only with ignition off in conditions where the ECU remains live. The pump is then activated at coolant temperatures over 110°C, switching off at 100°C on fall. If temperature should rise to 115°C, the pump will be supplemented by the two cooling fans running at half speed, switching off at 110°C on fall.

Fan Control Module

The cooling fans, re-circ. pump and a.c. compressor are controlled by a relay module mounted to the top of the passenger side wheelarch liner. **Important Note:** The a.c. relay module is identical in appearance to the engine relay module, but the function of the two modules is different and they must not be transposed. The a.c. relay module A117M0038F has a brown label marked YWB100800; The engine relay module A111E6024F has a white label marked YWB100970.

Downloaded from www.Manualslib.com manuals search engine

If the ECM receives a signal voltage outside of the acceptable range, a default setting equating to 60°C will be substituted, and the cooling fan energised.

KH.6 - RADIATOR FEED & RETURN PIPES

The radiator feed and return pipes are routed through the chassis main side rails, feed on the left, and return on the right. Each pipe is located by a grommet in the chassis front closing panel, and by a pair of shaped foam blocks inserted into the rear end of each chassis rail.

On initial build, the water pipes are fitted before the crash structure is bonded to the front of the chassis. A new chassis assembly is supplied with both water pipes and the crash structure pre-fitted. If a pipe is to be replaced in service without the crash structure being removed:

WARNING: The machined edges of the chassis extrusions and the ends of the drive fasteners can present sharp edges and points representing a potentially serious health hazard. It is strongly recommended that industrial gloves are worn, and other suitable precautions taken to provide protection from cuts and abrasions.

1. Drain the coolant and remove the front clamshell (see section BR).

2. To release the hoses from the rear ends of the water pipes requires that the fuel tank be removed. Access is available only via apertures in the inner walls of the chassis siderails within the fuel tank bay. To remove the tank refer to sub-section LJ.4. The hoses are secured to the rear ends of the water pipes by spring clamps requiring a suitable tool to release.

3. Release the hoses from the front end of the water pipe.

4. Using the access provided from within the fuel tank bay, push the water pipe forwards until obstructed by the crash structure. It is recommended that a suitable hole be cut in the flat vertical face of the crash structure, adjacent to the fog lamp harness grommet, in order to allow the pipe to be withdrawn forwards.

5. To refit, retrieve the two support foams from inside the chassis rail. Fit the grommet into the hole in the chassis front closing plate, and smear with rubber grease. Feed the pipe through the access hole and grommet, and position with 35 - 40 mm of pipe protruding.

5. At the rear end of the pipe, fit two foam support blocks onto the pipe, and push into the chassis rail ahead of the fuel tank bay aperture.

6. Refit the hoses to the front and rear ends of the pipes and manipulate the pipe to check for absence of chassis contact 'knock'.

7. Blank off the access hole in the crash structure with a suitable grommet.

KH.7 - OIL COOLERS

Depending on market territory and date of build, cars may be fitted with either an engine mounted water/oil heat exchanger, or a single LH front mounted air/oil cooler, or twin front mounted air/oil coolers. The water/oil heat exchanger or single front mounted oil cooler is entirely adequate for all normal conditions of road use, but for cars used on closed circuit tracks or driven in a competitive manner (note; such use may invalidate vehicle warranty), or if full vehicle performance is to be exploited for an extended period (especially in hot ambient temperatures), it is recommended that twin front mounted coolers be fitted for optimum control of oil temperature.

Water/oil Heat Exchanger (if fitted)

On cars so fitted, the oil/water heat exchanger is sandwiched between the oil filter and cylinder block. Water hoses connect a tapping on the left hand side of the cylinder block to the heat exchanger, and from the

Downloaded from www.Manualslib.com manuals search engine

exchanger to the heater water return pipe. This device transfers heat from the engine coolant to the oil after a cold start, and conversely, in conditions of high oil temperature transfers heat from the oil to the coolant.

Front Mounted Air/Oil Coolers

On cars so fitted, front mounted oil/air radiators are mounted ahead of each front wheel arch and fed with air from intakes either side of the main engine radiator intake in the body nose. 'Single oil cooler' cars are equipped with an oil cooler ahead of only the LH front wheel, but use the same hoses as twin oil cooler cars, with a joiner union attached to a bracket in place of the symetrically opposite RH cooler.

On all cars with front mounted oil cooler(s), the oil/water heat exchanger is replaced by a sandwich plate incorporating oil take-off feed and return unions, with the redundant coolant hoses interconnected by a 'U' pipe. A thermostat incorporated into the sandwich plate begins to open at 72ºC, and is fully open at 80ºC. When open, oil is directed from the sandwich plate via a flexible hose within the RH sill panel, over the front wheel arch liner to the top connection on the RH oil cooler (or joiner union on single oil cooler cars). From an outlet union at the bottom front of the cooler (or joiner union), another hose runs beneath the crash structure to the bottom of the LH cooler, from the top of which oil is returned via a third hose, running through the LH sill, back to the return union on the sandwich plate.

Oil Cooler Layout

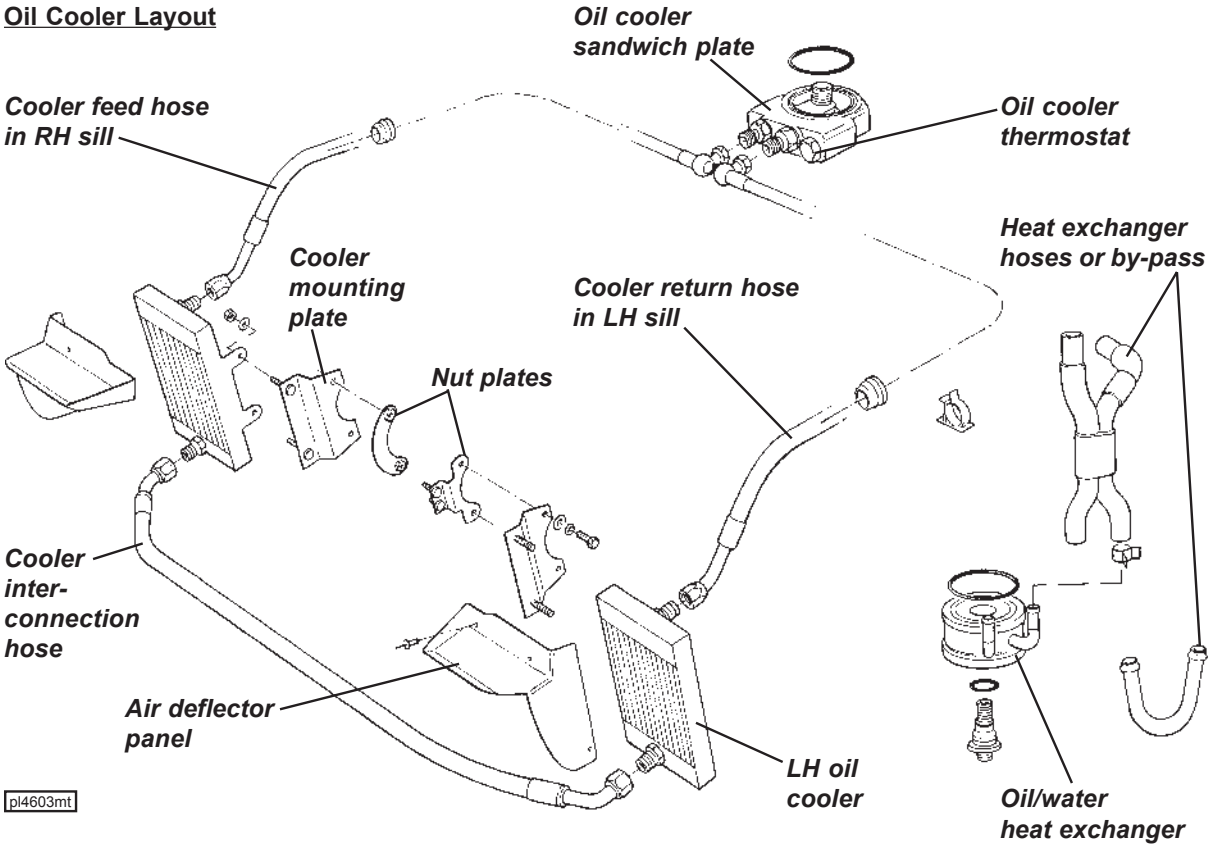

Each cooler is secured by a two stud bracket to the side of the crash structure, and positioned immediately ahead of the engine radiator mounting panel side extensions, which incorporate airflow apertures and additional deflector panels on their front surfaces. Louvres in the wheelarch liner front sections allow air to exhaust from the coolers into the wheelarches.

Downloaded from www.Manualslib.com manuals search engine

Procedure for conversion from single to twin front mounted oil coolers

Parts Required		Part Number	Qty
Oil Cooler, RH, incl. foam seal		A120K0020F	1
Duct, oil cooler, RH	- Elise	A120B0090F	1
	- Exige	A122B0194F	1
Big Head Pop Rivet, duct fixing		A089W6297F	3

1. Remove the front clamshell (refer to sub-section BR.6).

2. Disconnect oil cooler hoses from joiner union ahead of RH front wheel using 2 off 1 1/8" spanners, and plug hose ends to minimise oil loss.

3. Remove hose joiner bracket and secure new oil cooler, with its pre-applied sealing foam, to mounting bracket using existing fixings. Torque tighten to 22 Nm.

4. Fit hoses to oil cooler. When tightening the union nut **it is essential that the oil cooler union is held using a 15/16 in. open end spanner** whilst torque tightening the hose union nut (1 1/8") to 40 Nm. Failing to follow this procedure may result in damage to the oil cooler.

5. Start the engine and check for oil leaks.

6. Secure the new cooler duct with the three big head rivets to the radiator duct and refit the front clamshell.

Oil Cooler Circuit Bleeding

When carrying out routine oil changes, the oil quantity contained in the twin oil coolers and associated pipework is not disturbed and is considered perfectly satisfactory for routine maintenance operations. In instances of major engine failure where the oil system may be contaminated with metallic debris, all oil cooler lines should be thoroughly flushed out and the oil cooler radiators replaced.

If the oil cooler circuit is drained or replaced, the following procedure should be adopted to fill the cooler system before starting the engine:

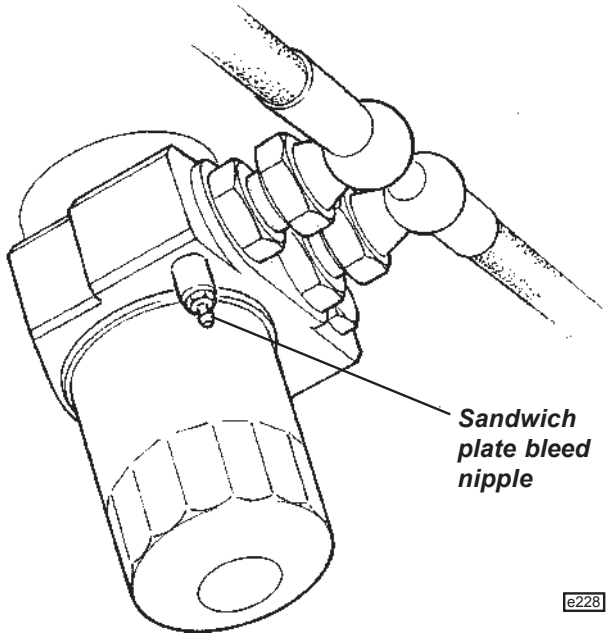

1. Attach a tube to the bleed nipple on the sandwich plate between oil filter and engine block, and lead into a catch tank. Open the bleed nipple.

2. Disconnect the outlet hose from the top of the LH oil cooler, and pour engine oil into the cooler until oil reaches the bleed nipple (approx. 2.5 litres).
   Close the bleed nipple, tightening to 8 Nm.

3. Connect the LH cooler outlet hose and tighten to 40 Nm.

4. Add a further 0.7 litres of oil into the engine to accommodate the volume of the return hose between LH oil cooler and engine.

5. After starting the engine, restrict running to idle speed for a minimum of 5 minutes, to allow the oil cooler lines to be purged of air. Stop engine and re-check oil level.

Downloaded from www.Manualslib.com manuals search engine

FUEL SYSTEM

SECTION LK - ELISE for North America

	Sub-Section	Page
General Description	LK.1	3
Fuel Filling	LK.2	4
Precautions	LK.3	5
Fuel Tank	LK.4	6
Fuel Pump/Sender Assembly	LK.5	9
Charcoal Canister	LK.6	10
Fuel Tank Pressure Test	LK.7	11

sn_lk_croft.indd 1 03/03/2006 11:22:27
Downloaded from www.Manualslib.com manuals search engine

Fuel System Layout - prior '06 M.Y.

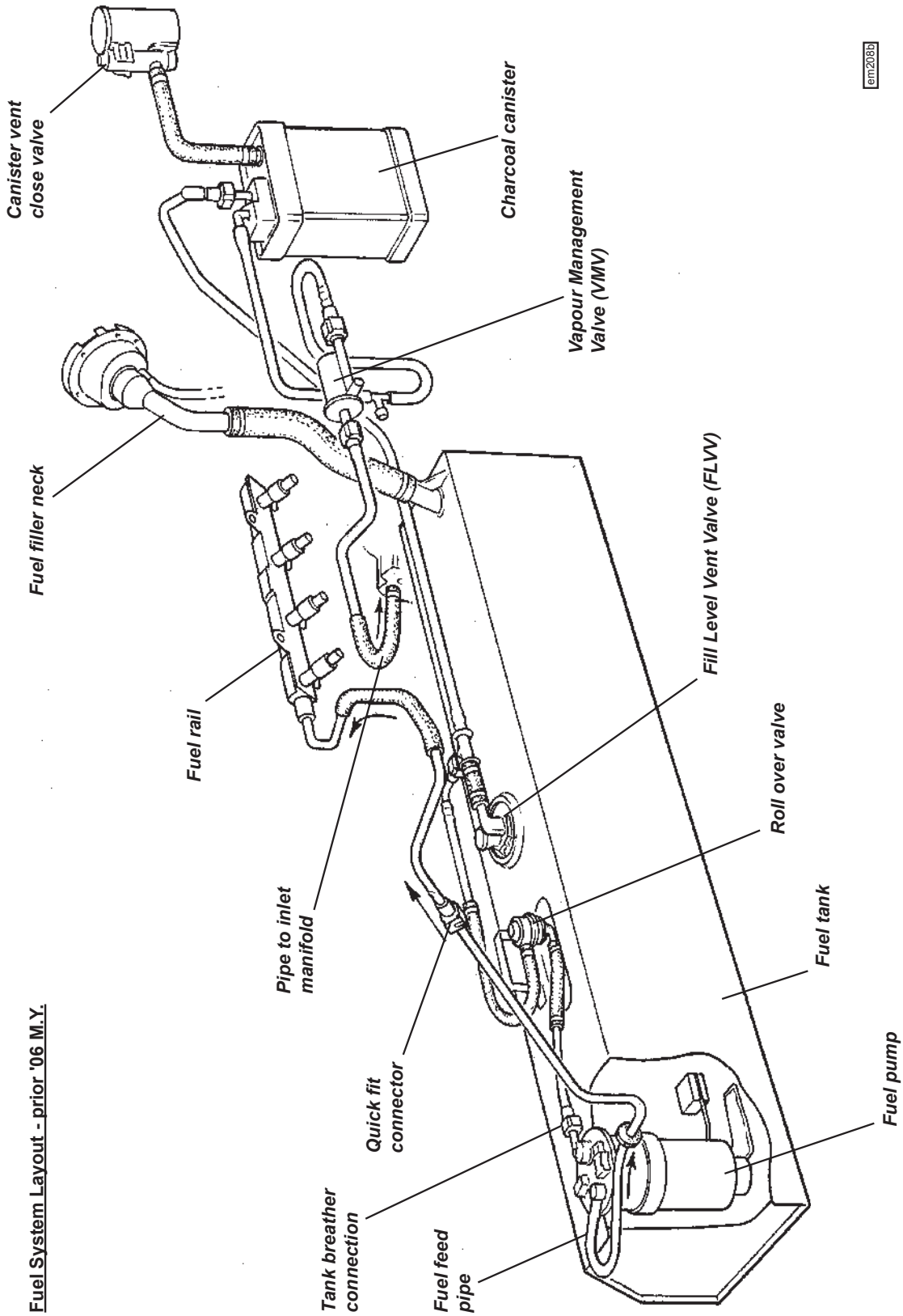

sn_lk_croft.indd 2 03/03/2006 11:22:27
Downloaded from www.Manualslib.com manuals search engine

LK.1 - GENERAL DESCRIPTION

The 10.6 U.S. gall. (40 litre) fuel tank is fabricated from stainless steel, and is mounted within the chassis crossmember between the passenger compartment and engine bay, and is secured against foam mouldings by two support brackets from beneath. The fuel filler neck connects with the right hand top of the tank, which incorporates an Onboard Refuelling Vapour Recovery (ORVR) system operating on cars prior to '06 M.Y. as follows:

In order to ensure that fuel vapour displaced from the tank during the course of filling is cleansed by the charcoal canister before venting to atmosphere, a liquid seal is used to close off the filler neck from escaping vapour. The filler tube extends within the tank to within 10mm of the bottom surface, such that the end of the tube is submerged in liquid fuel under all normal circumstances. A one way valve incorporated at the base of this fuller tube allows fuel to flow into the tank, but prevents backflow into the filler tube. When the tank is being filled, displaced vapour from within the tank is vented through a Fill Level Vent Valve (FLVV) mounted in the top of the tank, to the charcoal canister. Additional venting also takes place via a port in the top plate of the fuel pump, from where it is routed through a roll-over valve (to prevent fuel spillage in case of vehicle inversion) mounted on the centre top of the tank, before joining the pipe between FLVV and canister. A 3mm orifice in the filler pipe just below the top surface of the tank, allows the ECU to run fuel system integrity tests as required by OBD3.

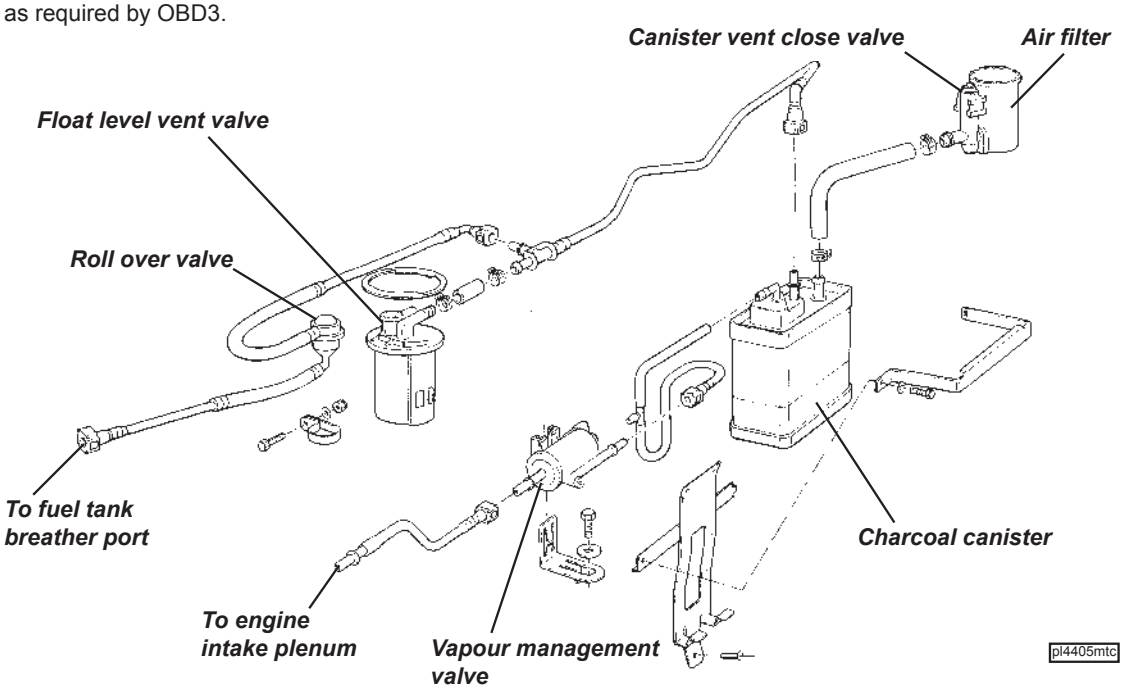

In order to meet LEV2 emissions criteria, the fuel system was revised for '06 M.Y. Whilst the principle of operation remains unchanged, in order to reduce the potential for evaporative emissions, the roll over valve, and its connection with the fill level vent valve, have been moved inside the body of the fuel tank, evidence of this configuration being provided by a bulge in the tank top surface. The breather port on the fuel pump top plate is connected back into the tank via a spigot on fuel tank top.

When the fuel reaches a specified level in the tank, a bouyant ball in the FLVV seals off the breather aperture and causes a pressure rise in the filler neck to shut off the delivery discharge nozzle. Full tank capacity has now been achieved. It is **NOT** recommended to attempt to fill the tank beyond this level.

The fuel pump/fuel gauge sender unit is mounted into the left hand top surface of the tank, and includes a submerged turbine type pump which draws fuel through a strainer 'sock' for delivery through a non-return valve, integrated fuel filter and a pressure regulator valve to the outlet port. A fuel supply pipe is clipped to the pump outlet port and is routed through the rear wall of the fuel tank bay, to feed the fuel rail for the four fuel injectors at a pressure of around 325 kPa. The single line fuel system eliminates fuel circulation back to the tank, resulting in reduced fuel tank temperature and evaporative emissions.

sn_lk_croft.indd 3 03/03/2006 11:22:28
Downloaded from www.Manualslib.com manuals search engine

When the ignition is first switched on, the engine management ECU energises the fuel pump for a period of about 3 seconds to prime the system before switching off. If a signal from the crankshaft sensor indicates that the engine is being cranked or is running, the fuel pump feed will be maintained. The pump is switched off immediately when the ignition is switched off, or about 3 seconds after a stall. Note that if coolant temperature at the time of ignition switch off is over 88°C, the ECU remains powered for a period of 20 minutes to allow for heat soak management (see sub-section KH.5). Re-energising the ignition during this period will not run the fuel pump until the ECU receives a crank signal.

A safety inertia switch is incorporated into the fuel pump electrical circuit, and operates in a severe impact (indicative of a vehicle collision) to switch off the fuel pump feed and minimise the fire risk. The switch is located in the engine bay on the inner face of the left hand chassis siderail, and is reset once tripped, by pressing the rubber button on the top of the switch.

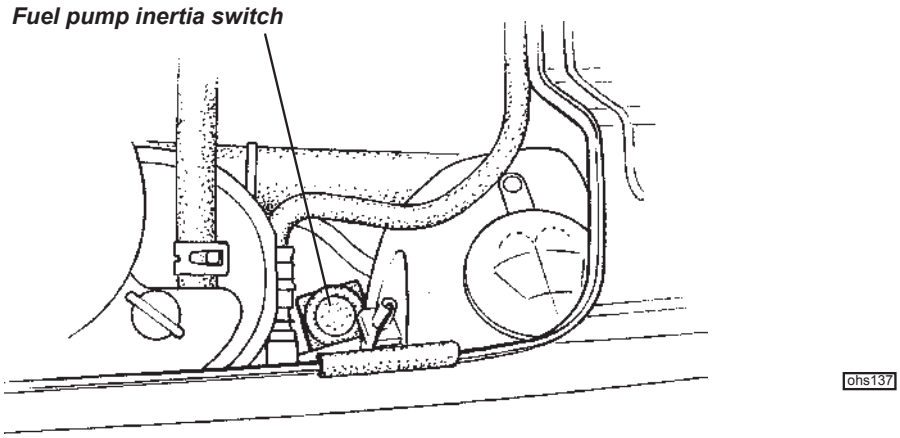

An evaporative emissions 'charcoal' canister is mounted at the right hand front of the engine bay and is connected to the air space inside the fuel tank via the FLVV and fuel pump top plate as previously described. The purge port of the canister is routed through a solenoid valve mounted on the inlet manifold, to a port on the intake plenum. The evaporative emissions control system prevents untreated fuel vapour from the tank reaching the atmosphere, by absorbing the tank vapour in a bed of activated charcoal in the canister. When the engine is running, the engine management ECU opens the Vapour Management Valve (VMV) and allows intake manifold depression to draw fresh air through the canister, purging absorbed fuel from the charcoal, and consuming the resultant vapour in the normal combustion process. In this way, the charcoal bed is 'cleaned' ready to absorb more tank vapour.

LK.2 - FUEL FILLING

Fuel Requirement

USE UNLEADED PREMIUM GRADE GASOLINE.

Use only unleaded gasoline meeting ASTM specifications. Use of fuels not meeting ASTM specifications could cause poor performance and increase emissions.

For optimum vehicle performance and fuel economy, the use of super or premium unleaded gasoline, with a minimum octane rating of 91 (RON+MON)/2 is recommended. Where super or premium fuel is not available, the Elise will operate satisfactorily on unleaded gasoline having a minimum rating of 87 (RON+MON)/2, but vehicle performance and economy will be reduced. Using fuel with a lower octane rating may cause knocking (pinking) which, if severe, can cause serious engine damage. Light knocking may occasionally be heard for short periods when accelerating or driving up hills, and this should cause no concern, although using a lower gear would be advised. If, however, persistent heavy knocking is heard when using the specified fuel, the cause should be ascertained without delay.

The use of good quality fuels containing proper detergent additives is advised for good performance and emission control.

Do NOT use leaded fuel: damage caused by the use of leaded or other improper fuel is not covered by

sn_lk_croft.indd 4 03/03/2006 11:22:28
Downloaded from www.Manualslib.com manuals search engine

the New Vehicle or Emission Control System Warranty. Leaded fuel will damage the oxygen sensor as well as contaminating the catalytic converter, the effectiveness of which decreases after as little as one tankful of leaded fuel.

Gasolines Containing Alcohol - Some gasolines sold at service stations contain alcohol although they may not be so identified. Use of fuels containing alcohol is not recommended, unless the nature of the blend can be determined as being satisfactory.

Gasohol - A mixture of 10% ethanol (grain alcohol) and 90% unleaded gasoline may be used in the Lotus Elise. If driveability problems are experienced as a result of using gasohol, it is recommended that the vehicle is operated on gasoline.

Methanol - Do not use gasolines containing methanol (wood alcohol). Use of this type of alcohol can result in vehicle performance deterioration and damage to critical parts in the fuel system. Fuel system damage and vehicle performance problems, resulting from the use of gasolines containing methanol, may not be covered by your vehicle warranty.

Fuels Containing MMT - Some North American fuels contain methylcyclopentadienyl manganese tricarbonyl (MMT), which is an octane enhancing additive. Such fuels may damage the emission control system and are NOT recommended.

Diesel - The Lotus Elise will not operate on diesel fuel.

Fuel Filling

WARNING: Be aware of the danger of explosion when dealing with petrol and its attendant fumes. Before stopping at a filling station, switch off mobile phones, ensure that all cigarettes are extinguished and that no naked flames or other potential ignition sources are present. Switch off the engine before refuelling.

Filler Cap: The fuel filler cap is located in the right hand rear quarter panel, concealed beneath a spring loaded flap. To remove, pull open the flap and turn the cap anticlockwise. As the cap is turned, any slight pressure differential between the tank and atmosphere will be released, and a brief hiss may be heard, which is completely normal. Note that the cap is tethered by a short strap to protect against loss.

To refit, place the cap into the filler neck and turn clockwise until the ratchet mechanism clicks several times. Push the flap closed.

Filling Procedure: Insert the pump nozzle fully into the neck, and fill until the auto-shut off mechanism is triggered. Do not attempt to 'brim' the tank to the top of the filler neck, as expansion of the fuel due to temperature change (cold underground fuel storage) may cause flooding of the fuel tank breather system charcoal canister, or spillage of fuel. The useable fuel tank capacity is 10.6 U.S. gall. (40 litres).

LK.3 - PRECAUTIONS

The fuel line between pump and injector rail, and the injector rail itself, contain pressurised fuel both when the ignition is switched on, and for a period after switching off. This feature aids engine starting by reducing the time needed to build up operating fuel pressure, and by inhibiting the formation of vapour pockets in the supply line of a stopped hot engine.

WARNING:

i) To minimise the risk of fire and personal injury, relieve the fuel system pressure before servicing any part of the fuel supply circuit. See 'Fuel Pressure Relief Procedure' below.

ii) To reduce the possibility of sparks occurring when a fuel line is disconnected, or when fuel vapour is present, the negative battery cable should be disconnected before work is commenced.

iii) When fuel lines are disconnected, absorb any escaping fuel in an absorbent cloth and dispose of safely.

sn_lk_croft.indd 5 03/03/2006 11:22:28
Downloaded from www.Manualslib.com manuals search engine

Fuel Pressure Relief Procedure

This procedure should be used prior to disconnecting any part of the fuel line.

- Pull out the fuel pump fuse (on the left hand side of the engine bay bulkhead, as shown), start the engine, and run until it stops from starvation. Crank the engine for a further few seconds.
- If the engine is a non-runner, pull out the fuel pump fuse, and crank the engine for 20 seconds to minimise residual fuel pressure.
- Disconnect the battery.

  It is recommended first to release the quick fit connector located to the rear of the coolant header tank:
- Release the retaining clip securing the pipe joint to the header tank bracket.
- Slide the orange coloured safety lock to allow access to the connector release buttons.
- Surround the pipe joint with a shop towel to absorb fuel contained in the pipework before pressing the release buttons and separating the joint.

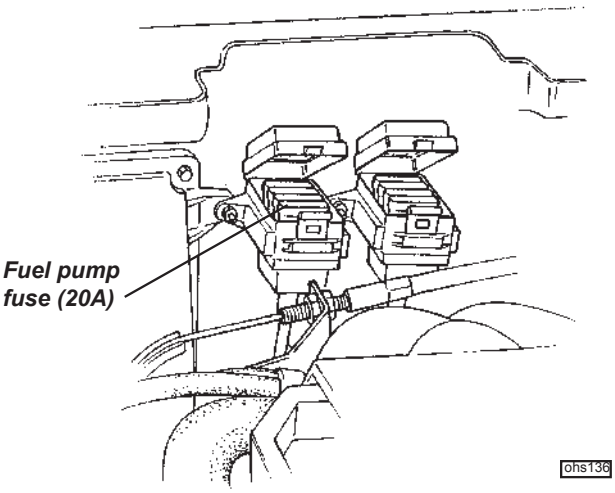

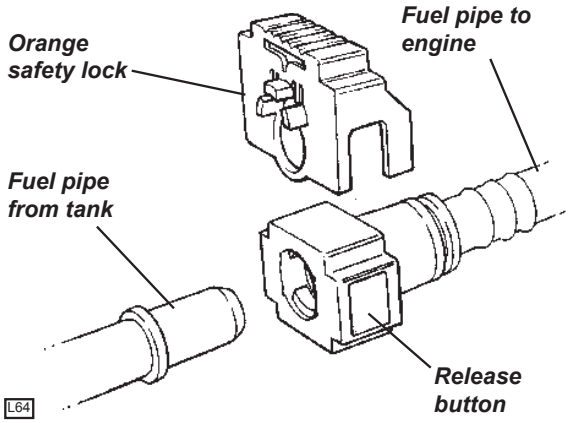

WARNING: Be aware of the possibility of full pressure retention in the fuel line caused by a system fault.

- Before re-making the joint, ensure that the orange safety lock is fitted onto the pipe connector in the orientation shown in the illustration.
- Push the male pipe end fully into the female connector until a click is heard. Pull on the pipe to ensure complete engagement.
- Slide the orange safety lock over the connector to prevent accidental pressing of the release buttons.
- Secure the pipe/connector using the pipe clip on the header tank bracket.

LK.4 - FUEL TANK

The 10.6 U.S. gall. (40 litre) stainless steel fuel tank is mounted within the chassis crossmember between the passenger compartment and engine bay, and is secured against foam mouldings by two support cradles from beneath. The fuel filler connects with the right hand top of the tank, and the fuel pump/fuel gauge sender unit is mounted into the left hand top surface. A removeable panel is provided in the top of the chassis crossmember in the cabin, and provides access to the fuel pipe connections and harness connector. If the pump/gauge sender unit is to be replaced, the tank must first be removed from the chassis.

sn_lk_croft.indd 6 03/03/2006 11:22:29
Downloaded from www.Manualslib.com manuals search engine

To Remove Fuel Tank

If possible, this operation should be performed when the fuel level is low to lighten the tank weight.

1. **WARNING: The fuel line between pump and engine remains pressurised after switching off the ignition. Before disconnecting the fuel line, carry out the fuel pressure relief procedure detailed in sub-section LK.3.**
   - Carry out the fuel pressure relief procedure detailed in sub-section LK.3.
   - Disconnect the battery.

   It is recommended first to release the quick fit connector located to the rear of the coolant header tank:
   - Release the retaining clip securing the pipe joint to the header tank bracket.
   - Slide the orange coloured safety lock to allow access to the connector release buttons.
   - Surround the pipe joint with a shop towel to absorb fuel contained in the pipework before pressing the release buttons and separating the joint.

   WARNING: Be aware of the possibility of full pressure retention in the fuel line caused by a system fault.

2. Remove the left hand seat and rear bulkhead trim panel. From the left hand rear corner of the cabin, remove the access panel on the top of the chassis rear crossmember for access to the fuel pump connections. Release the quickfit type connector on the fuel vapour line connection to the pump/sender unit top plate. Prise out the retaining spring clip and withdraw the fuel feed pipe. Immediately cap all pipes and ports to protect from dirt ingress and limit vapour hazard. Disconnect the wiring harness plug from the pump unit, and from the pressure sensor.

3. Remove the RH rear wheel and wheelarch liner to provide access to the filler hose connection. Release the filler hose from the tank spigot, and immediately cap the orifice to prevent dirt ingress and reduce the vapour hazard.

4. Release the quickfit type connnector on the vapour line to the charcoal canister, and cap the pipe and canister port. Pull out the grommet surrounding this pipe in the rear wall of the chassis bay.

5. Remove the engine bay undertray/diffuser.

6. Disconnect control cables:
   - Release the two gearchange cables from the transmission levers and abutment bracket.
   - Release the parking brake cable from the horseshoe compensator and abutment brackets.
   - Release the throttle cable from the engine.
   - Release the gearchange cable and throttle cable 'P' clips from the perforated 'shear panel' below the fuel tank.

7. From beneath the fuel tank, release the fixings securing the 'shear panel' front and rear edges to the chassis, and those at each side securing the composite sills to the panel. Note that this panel is a structural part of the chassis, and that the car should not be used without the panel fitted.

sn_lk_croft.indd 7 03/03/2006 11:22:29
Downloaded from www.Manualslib.com manuals search engine

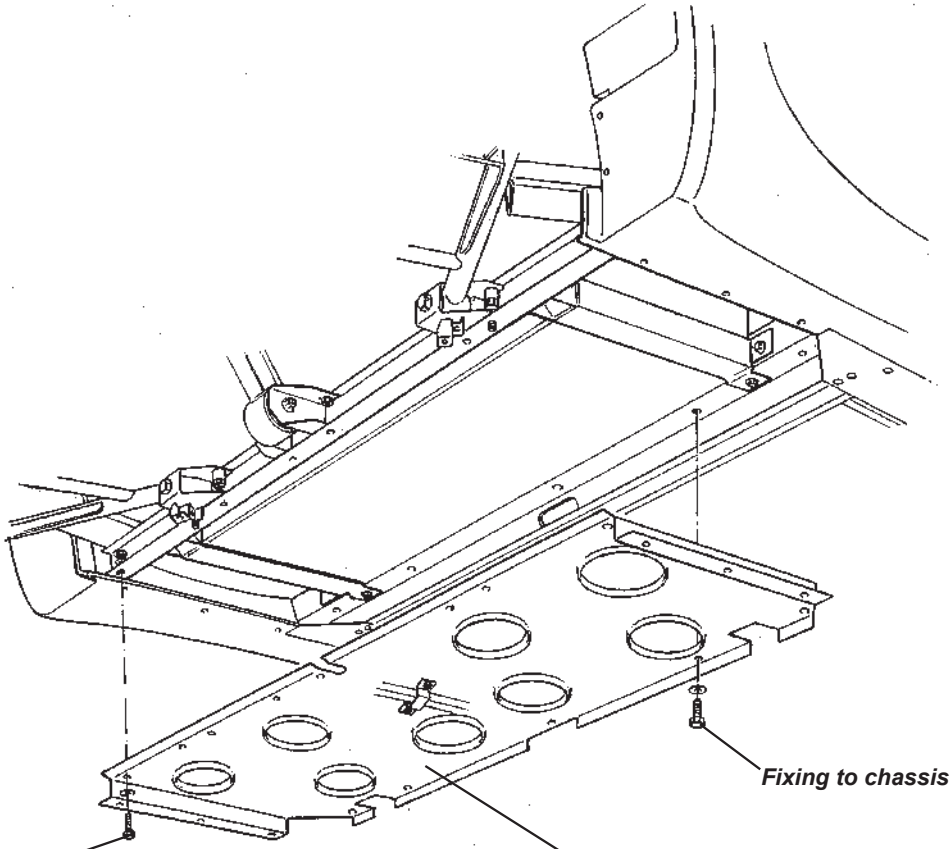

8. Support the tank before removing the two support cradles from the chassis. Each cradle uses two bolts at the front end of the bracket, and a single bolt at the rear, all threading into Rivnuts in the chassis.

9. Carefully lower the tank from the chassis, feeding the vapour line through the chassis hole.

10. Before re-fitting the tank, ensure that all the clamping pads are in place:
    - EPDM foam sponge block on upper and lower edges of both tank side faces;
    - Expanded Polypropylene saddles on top face of tank;
    - Neoprene isolating strip between tank and support cradles;
    - EPDM rubber wedge between front bottom edge of tank and support cradles;
    - Neoprene sponge foam between upper front of tank and chassis.

sn_lk_croft.indd 8 03/03/2006 11:22:30
Downloaded from www.Manualslib.com manuals search engine

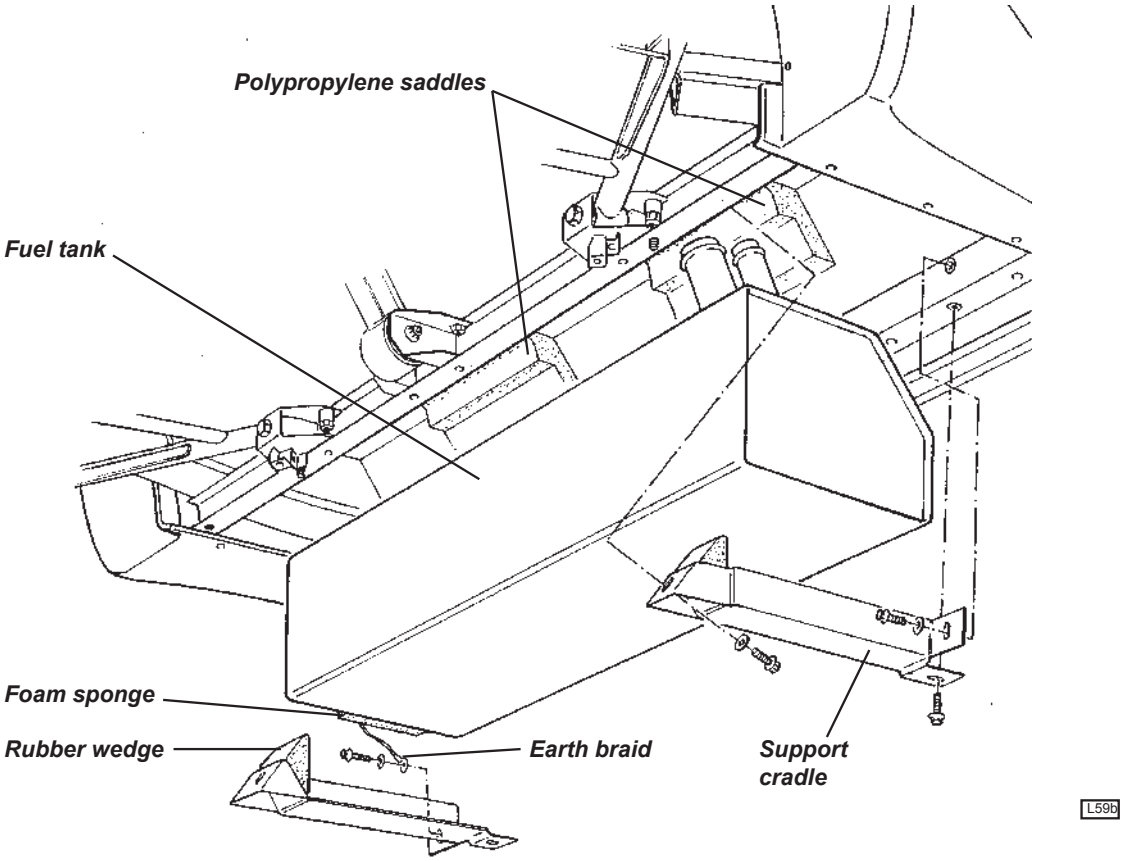

11. Ensure the pump/sender unit, FLVV, roll-over valve and associated pipework is fitted to the tank, with the earth braid fitted onto the '10 O'clock' position pump mounting stud.

12. Loose fit the LH tank mounting cradle ensuring that the earth braid is fitted beneath the head of the horizontally disposed front fixing bolt.

13. As the tank is raised into position, feed the vent pipe through its hole in the chassis wall. Feed the LH end of the tank into the cradle, and raise the tank into position taking care not to trap or pinch the fuel pipes or wiring harness. Retain with the RH cradle, noting that no washer is fitted at the horizontally disposed front fixing point. Torque tighten the cradle fixing bolts to 24 Nm.

14. Continue the installation in reverse order to removal, and ensure that the 'shear panel' is fitted beneath the fuel tank bay before driving the car.

LK.5 - FUEL PUMP/SENDER ASSEMBLY

The combined fuel pump/gauge sender unit is mounted in the left hand end of the tank top surface. A removeable panel is provided in the top of the chassis crossmember in the cabin, which provides access to the fuel pipe connections and harness connector, but if the pump/gauge sender unit is to be replaced, the tank must be removed from the chassis (see sub-section LK.4).

For fuel pump test procedures, refer to Engine Repair Manual B120T0327J.

sn_lk_croft.indd 9 03/03/2006 11:22:30
Downloaded from www.Manualslib.com manuals search engine

To Remove Pump/sender Assembly

1. Remove the fuel tank (see sub-section LK.4).

2. Release the eight nuts securing the clamping ring, and carefully withdraw the pump assembly from the tank. Immediately seal the tank aperture to reduce the vapour hazard and prevent dirt ingress.

3. For permitted disassembly of the pump unit, refer to Engine Repair Manual B0120T0327J.

4. To refit the pump assembly, renew the rectangular section sealing ring before carefully feeding the sender float arm in through the tank aperture. Orientate the unit with the breather spigot pointing inboard, and fit the clamping ring with the location tab engaged with the recess in the pump top moulding. Fit and secure the eight M6 washers and nuts.

5. Refit the fuel tank into the car (see sub-section LK.4).

6. Connect the fuel feed pipe and retain with the spring clip. Connect the breather pipe to the spigot on the pump top plate. Fit the harness plugs to the pump/sender connector, and to the pressure sensor.

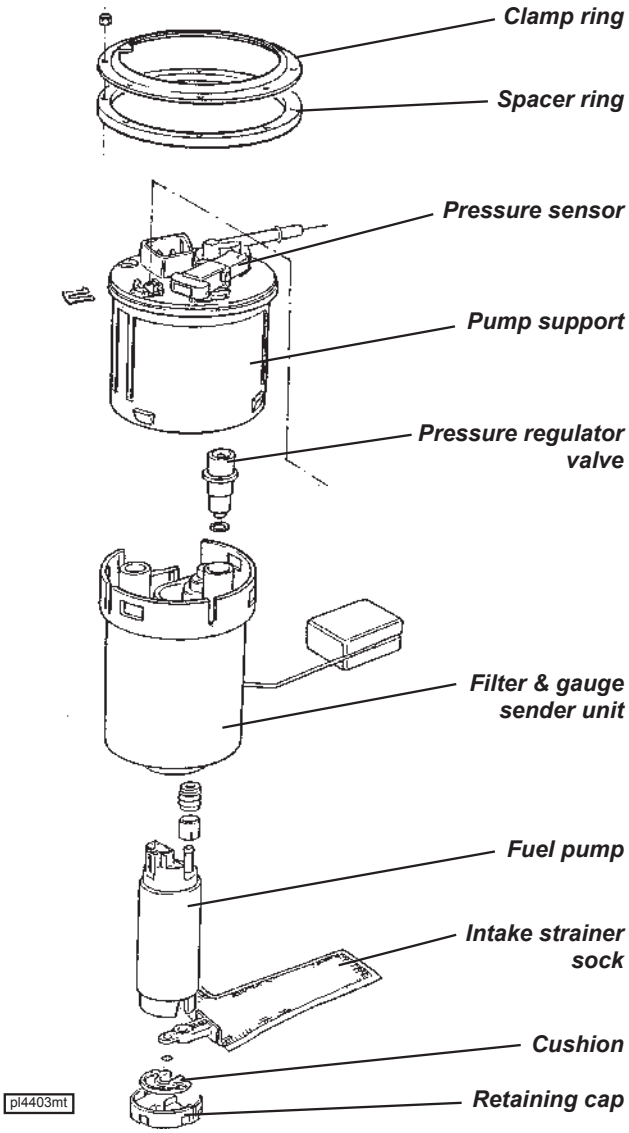

LK.6 - CHARCOAL CANISTER

In order to prevent fuel vapour venting from the fuel tank to atmosphere, the breather pipe from the tank is routed to a canister filled with activated-charcoal, which absorbs and stores the fuel vapour when the engine is stopped. When the engine is running, the canister is connected to the depression in the inlet manifold via a port on the intake plenum such that fresh air is drawn through the canister to purge the charcoal of its absorbed fuel, with the resultant gas then consumed by the engine in the normal combustion process.

Charcoal Canister

This is mounted at the right hand front corner of the engine bay via a bracket fixed to the bulkhead. Fuel vapour from within the tank and collected from the FLVV and a spigot on the fuel pump/sender top plate, is routed to the canister port labelled ‘tank’. This port is extended within the canister to the underside of the charcoal bed, below which is a reservoir to collect any liquid fuel. A second port on the canister ('vent') connects the top side of the charcoal bed to atmosphere via a solenoid controlled 'close' valve. In this way, vapour from the fuel tank is cleansed of fuel by the charcoal bed before venting to atmosphere.

sn_lk_croft.indd 10 03/03/2006 11:22:30
Downloaded from www.Manualslib.com manuals search engine

The third, 'purge' port, controlled by a solenoid valve mounted on the inlet manifold, connects the underside of the charcoal bed with a port on the engine intake plenum. The pulse width modulated vapour management valve is opened during certain engine running conditions in order to allow intake depression to draw fresh air through the vent pipe and charcoal bed, cleansing the charcoal of fuel before consuming the resultant vapour in the normal combustion process. In this way, the charcoal is prepared for further vapour absorption.

Control System

The vapour manageement valve is controlled by the engine management ECU, which keeps the valve closed (unenergised) when the engine is cold or idling in order to maintain idle quality. At normal running temperatures and engine speeds above idle, the ECU monitors other running conditions and the status of various management systems, and when appropriate conditions pertain, the ECU will apply a duty cycle to the valve in order to regulate the amount of purging allowed dependent on the amount of vapour in the canister.

LK.7 - FUEL TANK PRESSURE TEST

In order to verify the sealing integrity of the fuel tank and filler system, the following test should be performed:

1. Use the Lotus Scan tool to close the canister vent valve or apply 12 volts and ground to the two terminals of the vent valve electrical connector.

2. Locate the test port in the purge line between the canister and vapour management valve (VMV), which is itself mounted on an inlet manifold plenum bracket, and connect an appropriate tester or pressure pump and water manometer as shown in the diagram.

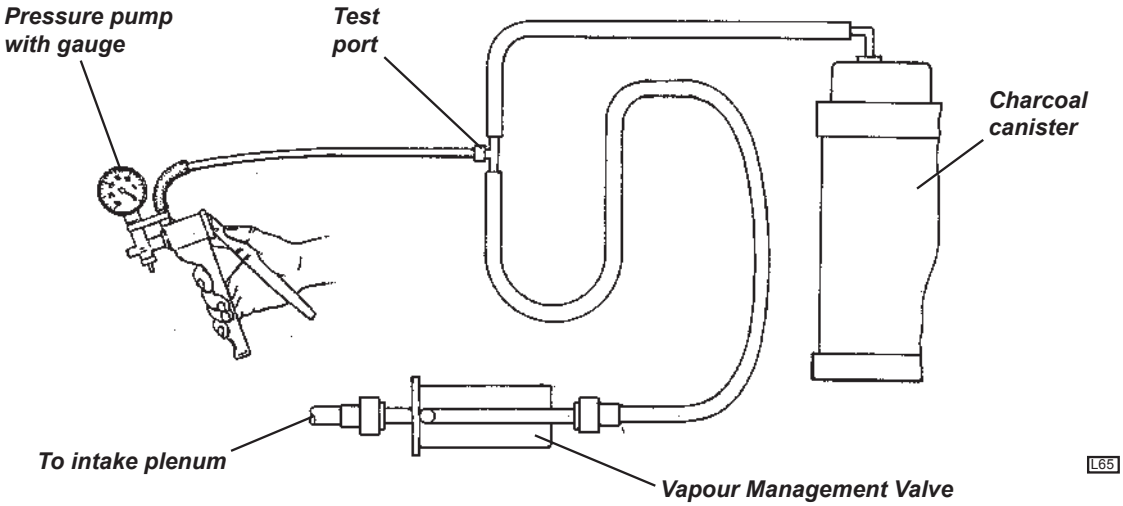

3. Pressurise the tank to 20"H_2O (5.0 kPa).

4. Allow to stabilise for 30 to 60 seconds then take a reference point and start measuring the pressure decay over a period of 60 seconds.
   Typical pressure reduction over this period should not exceed the region of 1" H_2O (0.25 kPa).
   Pressure loss of between 2" H_2O (0.5 kPa) and 3" H_2O (0.75 kPa) will cause the MIL to be illuminated and a trouble code (P0456 - minor pressure loss) to be set. Minor leaks equivalent to a 0.5 mm (0.020 inch) hole, may be caused by:
   - Inadequate sealing of the VMV. To verify, clamp off the flexible hose between the VMV and inlet manifold and repeat the test. A significant improvement indicates a suspect valve. Clean or renew.

sn_lk_croft.indd 11 03/03/2006 11:22:31
Downloaded from www.Manualslib.com manuals search engine

Other possibilities include:

- Poorly sealing fuel filler cap. Check tightness, body foul conditions, sealing ring integrity.
- Pipe and hose connections.
- Canister close vent valve (CCVV). Check by clamping hose between canister and vent valve. A significant improvement indicates a suspect valve. Clean or renew. Note that once the CCVV and the VMV have been clamped, any remaining leakage will be either in the canister tank connection or the fuel tank assembly.
  Pressure loss greater than 3" H_2O (0.75 kPa) will cause the MIL to be illuminated and a trouble code (P0442 - major pressure loss) to be set. Causes of this level of leakage, equivalent to a 1.0 mm hole (0.040 inch) may be caused by any of the above.
  A gross leak will cause a trouble code P0455 to be set, the possible causes of which include filler cap sealing, or fuel filler hose connections.

sn_lk_croft.indd 12 03/03/2006 11:22:31
Downloaded from www.Manualslib.com manuals search engine

ELECTRICS

SECTION MP

	Sub-Section	Page
Cobra Vehicle Security Alarm (prior '08 M.Y.)	MP.1	2
Central Door Locking	MP.2	5
Electric Windows	MP.3	6
Switches & Instruments - Driver's Information	MP.4	7
Component Location & Fuse Ratings	MP.5	13
Audio Equipment	MP.6	15
Battery, Battery Cables & Earthing Points	MP.7	16
Wiper Mechanism	MP.8	19
Harness Routing	MP.9	20
Front Lamp Assemblies	MP.10	21
'06 M.Y. Supplement	MP.11	23
'08 M.Y. Supplement (incl. PFK alarm system)	MP.12	26
Circuit Diagrams: non-USA prior '06 (white paper)	MP.13a	35
Circuit Diagrams: USA prior '06 (cream paper)	MP.13b	37
Circuit Diagrams: '06 onwards (grey paper)	MP.13c	39
Circuit Diagrams: '08 onwards (green paper)	MP.13d	41

Downloaded from www.Manualslib.com manuals search engine

MP.1 - COBRA VEHICLE SECURITY ALARM

The Lotus Elise/Exige prior to '08 M.Y. is fitted as standard with a Cobra 8186 immobiliser/alarm which includes the following features:

- Elise 111R U.K. approval to Thatcham category 1.
- 'Dynamic coding' of the transmitter keys; Each time the transmitters are used, the encrypted rolling code is changed to guard against unauthorised code capture.
- Automatic (passive) engine immobilisation to prevent the engine from being started.
- Ingress protection using sensing switches on both doors, both front body access panels, and the engine cover.
- Personal protection by 'on demand' activation of the siren.
- Selectable cockpit intrusion sensing using a microwave sensor.
- Self powered siren to maintain protection if the vehicle battery is disconnected.
- Alarm/owner transmitter programming using a Personal Identification Number (PIN).

Transmitter Fobs

Two transmitter fobs are provided with the car to operate the immobiliser/alarm system. The two transmitters should be kept separate, and a replacement obtained immediately after any loss to ensure that a spare is always available.

Each individual alarm system has a unique serial number and an owner's Personal Identification Number (PIN), both of which are printed on a code card supplied with the vehicle. In order to allow replacement transmitters to be ordered, **it is essential that these numbers are recorded and kept safely with the vehicle documents**. If the code card is not available on receipt of the car, enquire with the dealer immediately.

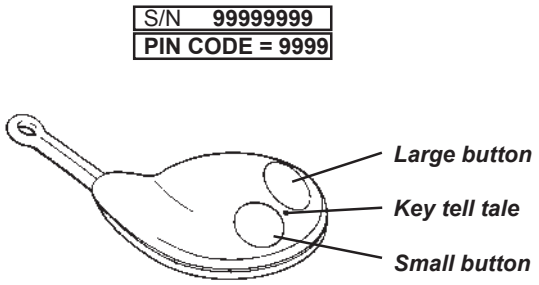

COBRA TRANSMITTER & CODE NUMBERS

Engine Immobiliser

In order to provide a measure of automatic vehicle security, independent of any driver initiative, the system will 'passively' immobilise the engine's cranking and running circuits after the first occurring of the following approximate time delays:

i) Four minutes after switching off the ignition.
ii) Two minutes after a mobilising command (see below).
iii) One minute after switching off the ignition and opening the driver's door.

The immobilised state is indicated by the security tell tale in the tachometer upper face flashing continuously.

To mobilise the engine, press once, and for a full second, the larger of the two buttons on the transmitter fob. The security tell tale will be extinguished.

Valet Mode

If leaving the car for servicing or parking, the passive immobilisation feature may be switched off by; switching on the ignition, pressing the transmitter small button, and switching off the ignition. Two beeps will confirm 'valet' activation, and the security tell tale will flash continuously, even with the engine running.

At the next arming command, the valet mode will be switched off.

Arming the Alarm

Remove the ignition key, close (and lock) both doors, and check that the engine cover and front body access panels are secure. The roof may be either closed or open. Press once, and for a full second, the larger of the two buttons on the transmitter fob (on cars with CDL, this action will automatically lock both doors - see later). This command will be acknowledged by:

Downloaded from www.Manualslib.com manuals search engine

- Two flashes of the hazard warning lamps;
- Continuous flashing of the security tell tale.

Check that these indications occur. If not, press the button a second time, as the first press may have only switched off the passive immobilisation (see above).

Note that if the system is armed when a door or engine cover/front access panel is not fully closed, a continuous buzz will be heard as warning. If still open after expiry of the arming period, (see below) the alarm will be armed with that switch group (both doors, or front/rear access lids) excluded from the circuit.

After arming the system, the engine is immediately immobilised, but a period of approximately 45 seconds must elapse before all functions and sensors become fully active. After this time, the alarm will be triggered by any of the following actions:

- Interruption of the vehicle battery power supply.
- Energising the ignition circuit ('hot wiring').
- Opening a door;
- Opening the engine cover or a front access panel.
- Movement detected within the cabin.

When triggered, the hazard warning lamps will flash and the electronic wailing siren will sound for a period of approximately 30 seconds before closing down and resetting, ready for any further triggering input. If a trigger is continuously present, the alarm will repeat after a short delay, and continue in this sequence for about ten cycles.

To silence the siren when triggered, press once, and for a full second, the larger button on the transmitter fob. This will not affect the status of the alarm which will remain armed.

Disarming the Alarm

To disarm the alarm, press once, and for a full second, the larger button on the transmitter fob. This command will be acknowledged by:

- One flash of the hazard warning lamps;
- Extinguishing of the security tell tale.

If the alarm had been triggered during the last armed period, the disarm command will be acknowledged by the hazard lamps flashing 4 times, and the buzzer sounding 4 times. The security tell tale will then flash a code to indicate the triggering source:

- One pulse flashing: door, engine cover/boot lid or body front access panel. On USA cars, check that the interior lamp is not switched off.
- Two pulse flashing: movement detected in cabin by microwave sensor.
- Four pulse flashing: tampering with ignition circuit.
- Six pulse flashing: interruption of battery supply.
- Seven/Eight pulse flashing: serial data fault; alarm harness including microwave sensor cables and immobiliser fuse.

The coding will be deleted when the ignition is next turned on.

Emergency Disarming/Mobilising

If the transmitter fobs are lost or damaged, the alarm system owner's unique PIN may be used to disarm the alarm and/or mobilise the engine ***provided that*** access is available to the cabin. Follow the transmitter fob programming instructions (see later) from step 3.

Intrusion Sensing

A microwave sensor is mounted behind the cabin rear bulkhead trim panel, and is able to detect substantial physical movement within the cockpit, and trigger the alarm. Microwave transmissions are blocked by metal objects, so it is important not to corrupt the signal by placing such items on the bulkhead ledge.

If desired, the alarm may be armed without the intrusion sensor or battery interruption circuits being active by arming the system in the usual way with the transmitter larger button, and within 20 seconds, pressing the smaller button twice.

Downloaded from www.Manualslib.com manuals search engine

Manual Activation of Horn/Siren

To enhance personal security, with the system in an armed state, the siren may be manually triggered by pressing the transmitter smaller button. The horn/siren will sound and the turn lamps flash for 15 seconds. To stop the alarm, press either of the two buttons.

Transmitter Fob Battery Replacement

The transmitter fobs will normally operate within a range of 5 metres from the car, but this may be reduced by the presence of other radio signals in the vicinity. A small LED tell tale on the transmitter fob will flash whilst the button is held down to indicate correct operation, but if the lamp flashes irregularly or only once, transmitter battery replacement is required.

The transmitters are powered by a long life 3V Lithium battery, type CR2032, which with normal use should last for 3 years. To ensure continuity of operation, it is recommended to renew the batteries every 12 months:

- Using a small screwdriver, prise open the case in the areas marked 'open'.
- Remove the old battery and wait for 10 seconds before inserting the new battery with +ve sign uppermost, and holding the battery only by the periphery.
- Align the locating studs, and firmly press the case together.
- The transmitter should now operate normally, but may require re-synchronisation with the control unit.

Transmitter Re-synchronisation

If at any time the transmitter does not function, and the battery is known to be good, carry out the following re-synchronisation procedure:

- Stand close to the car and hold down both buttons on the transmitter until the LED on the fob is extinguished (approx. 10 seconds).
- Release both buttons; the fob tell tale should come on constantly.
- Press the larger button for one second (the fob tell tale will flash). Synchronisation is complete.

Programming Additional Transmitter Fobs

Two transmitter fobs are provided with the new vehicle. If a transmitter is lost or damaged, a replacement should be obtained immediately from your dealer, and programmed to the vehicle alarm controller using the system owner's unique Personal Identification Number (PIN). Up to four transmitter fobs can be matched with the alarm system, but all fobs must collectively undergo the single programming operation:

a). Before programming the transmitters, the PIN should first be verified. If the PIN is incorrect and a working fob is prepared for reprogramming, all fobs may be disabled. To verify the PIN;
With the car immobilised (tell tale flashing), follow steps (3i) to (3iii) below (i.e. do not prepare any fobs). If the PIN is correct, the tell tale should be extinguished, and the system mobilised. If not, the PIN is incorrect.

b). Having verified the PIN as above, proceed as follows:

1. Press, simultaneously, both buttons on a transmitter fob until the fob tell tale stops flashing (approx. 10 seconds). On release of the buttons, the fob tell tale will light.
2. Repeat operation (1) for ALL the transmitter fobs required to operate the system.
3. If the system is immobilised (security tell tale flashing):
   i) Turn the ignition on and off 3 times within 7 seconds; the security tell tale in the tachometer will light for 3 seconds.
   ii) Enter the PIN: Immediately the tell tale goes out, switch ON the ignition and count the number of security tell tale flashes until equal to the first number of the PIN, then turn the ignition OFF, then back ON again.
   iii) Repeat operation (ii) for the remaining 3 digits of the PIN, remembering to turn the ignition OFF and back ON after each code number.
   Note: If at any time a mistake is made when entering the PIN, turn the ignition OFF for 10 seconds and re-commence entering the PIN.
   iv). If the PIN is correct, the security tell tale will be out. Carry on with step 4.
4. With the system mobilised (security tell tale out):
   i) Turn the ignition on and off 3 times within 7 seconds; the security tell tale in the tachometer will light for 3 seconds.

Downloaded from www.Manualslib.com manuals search engine

ii) Enter the PIN: Immediately the tell tale goes out, switch ON the ignition and count the number of security tell tale flashes until equal to the first number of the PIN, then turn the ignition OFF, then back ON again.

iii) Repeat operation (ii) for the remaining 3 digits of the PIN, remembering to turn the ignition OFF and back ON after each code number.

Note: If at any time a mistake is made when entering the PIN, turn the ignition OFF for 10 seconds and re-commence entering the PIN.

5. After finishing step (4) with the ignition on, within 7 seconds, press once the large button of each transmitter fob.
6. Turn off the ignition.
7. Test operation of each transmitter fob.

Location of Components

The alarm system components are located as follows:

- Electronic Controller: Mounted on top of the scuttle beam at passenger's extreme end. Accessible after removal of fascia top.
- Siren Unit: Mounted on front of radiator duct LH extension, beneath LHF turn lamp. Accessible only after removal of front clamshell.
- Immobiliser Module: Mounted on left hand end of cabin rear bulkhead. Accessible after removal of rear bulkhead trim panel.
- Microwave Sensor: Mounted centrally on cabin rear bulkhead, beneath trim panel.
- Engine Lid Sensor: Mounted on luggage compartment bulkhead, alongside latch.
- Front Access Panel Sensors: Mounted on brackets fixed to topshell at outboard edge of aperture.

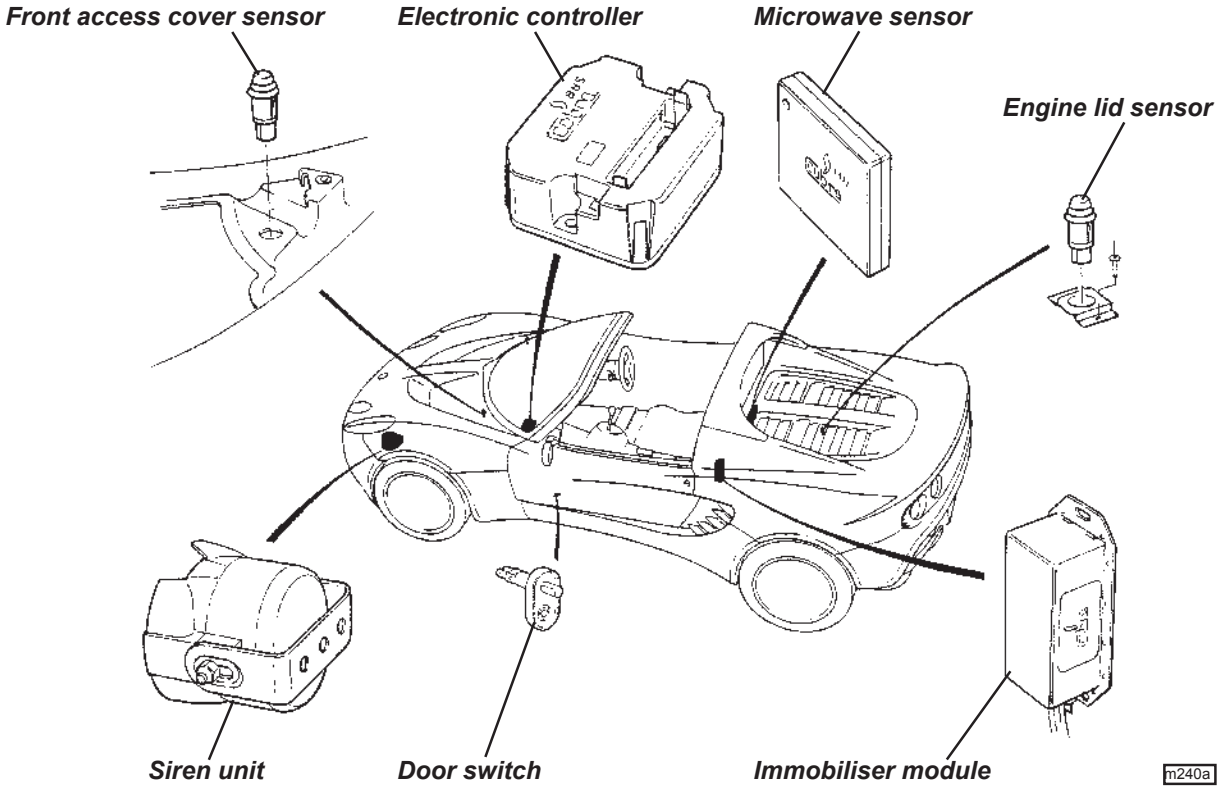

Identification of alarm controller

Note that earlier Elise variants have used versions of the alarm controller with and without CDL functionality. For Elise 111R and Exige models with CDL, the controller should be printed with the identification 8185 4C8170AIB.

Downloaded from www.Manualslib.com manuals search engine

MP.2 - CENTRAL DOOR LOCKING (IF FITTED)

The central door locking (CDL) operates on the driver's and passenger's doors in conjunction with the security alarm system, which includes CDL circuitry in the Cobra 8186 alarm controller.

To lock the car, remove the ignition key, close both doors and check that the engine cover and front body access panels are secure. Arm the security alarm in the usual way by pressing once, for a full second, the larger of the two buttons on the transmitter key. This action will both arm the alarm and electrically lock the driver's and passenger's doors.

If it is desired to lock the doors from inside the vehicle, for example to deter highjack attempts, a CDL rocker switch is provided on the front of the gear lever shroud which should be pressed to the right to lock both doors with or without the ignition switched on. Alternatively, the doors can be locked individually by depressing the button at the rear end of each door sill. Note that whichever locking method is used, the doors will be 'deadlocked' such that the interior door release handles are inoperative.

To unlock the doors, press once, for a full second, the larger button on the transmitter key. The alarm will be disarmed and both doors unlocked. Alternatively, from inside the car, press to the left the rocker switch on the gear lever shroud to unlock both doors, or raise the sill button on each door. Note that in the event of a vehicle collision which causes the safety inertia switch to be tripped, the doors will automatically be unlocked.

Notes:

- In the event of a flat vehicle battery, the central door locking will not operate. The doors can be unlocked from outside only after:
  Elise; opening the engine cover and restoring power to the battery by substitution, re-charging or 'jumping' to a second battery.
  Exige; removing the front body passenger side access panel and providing a 12 volt supply to the auxiliary power point.

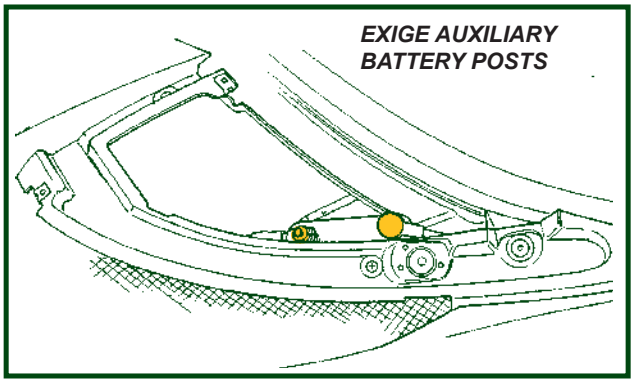

- To lock the car with a flat or disconnected battery, use the mechanical key in each exterior door button to disconnect each release button from the latch. This technique does not 'deadlock' the interior release handles, but does allow continued key access to the car until restoration of battery power.
- To deadlock the car with a flat vehicle battery, or without the use of the transmitter or mechanical key, close and lock one door using the sill button, and for the second door, hold the exterior release button pressed in and depress the sill button before closing the door. Access is now available only on restoration of electrical power.

Door Locking Actuator

A CDL actuator is screw fixed to the door shell below the latch mechanism, and uses a link rod which passes through the innermost hole on the latch lever, before continuing upwards to the door sill button. For replacement details, refer to sub-section BP.17.

Modules, Fuses & Relays

A CDL module is mounted on the top of the scuttle beam at the extreme end on the driver's side, accessible after removal of the fascia top trimmed panel and face level vent trunking (if fitted). A battery feed for the CDL system is provided from fuse A22 (7.5A).

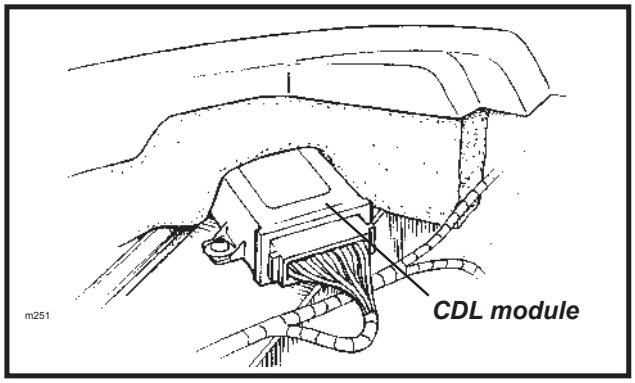

Downloaded from www.Manualslib.com manuals search engine

MP.3 - ELECTRIC WINDOWS (if fitted)

On cars so equipped, switches for the electric windows are mounted in the front of the door trim panels, and are operative only with the ignition switched on. To help locate the switches in the dark, an illuminated dot is provided in the 'down' button which glows amber when the lights are switched on.

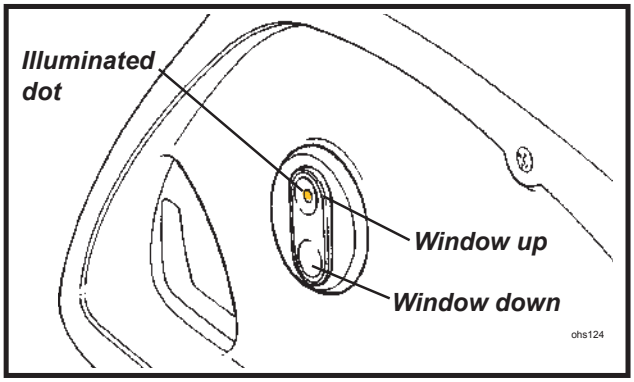

To lower a window, switch on the ignition and press the lower, dished end of the switch in the relevant door. Release the switch to stop window movement. To raise a window, press the upper, domed end of the switch. The electric window lift mechanismuses an electric motor and winder drum driving a steel cable around top and bottom guide pulleys to a lift block. The window glass is fixed to the lift block which is guided by a vertical rail.

The door harnesses to support CDL and electric windows are routed to the scuttle area via a grommet in the 'A' post area ahead of the door hinge post. Two 20A fuses for the window motors are tie wrapped to the harness above the passenger footwell. Modules for the hazard lamps and wash/wipe functions, and relays for the horn and inertia switch door open command, are mounted on the scuttle beam in the same area.

Downloaded from www.Manualslib.com manuals search engine

MP.4 - SWITCHES & INSTRUMENTS - DRIVER'S INFORMATION

Ignition Switch/Steering Lock

The switch/lock is located on the right hand side of the steering column.

I - Insert the key into the slot, and turn clockwise to position 'I' to unlock the steering column. If the key is reluctant to turn, wriggle the steering wheel to ease the load on the steering lock.

II - Turn to position 'II' to switch on the ignition and operate auxiliary equipment.

III - Turn further clockwise to 'III' against spring pressure to operate the starter motor. As soon as the engine starts, allow the key to return to position 'II'. For the correct starting procedure, see the later chapter 'Starting Procedure & Running In'. To stop the engine, turn the key back to 'I'.

Passive Immobilisation: If the ignition has been switched off for longer than four minutes, or longer than one minute after switching off the ignition and opening the driver's door, the passive immobilisation security feature will operate and disable the ignition and starter circuits. This condition is indicated by the security tell tale flashing continuously. To mobilise the engine, press once, and for a full second, the larger of the two buttons on the transmitter fob. The security tell tale will be extinguished.

B - To remove the key, turn fully counterclockwise to 'B' and withdraw. The steering column lock will be activated when the key is withdrawn but may not engage until the steering is turned and the mechanism is aligned.

DO NOT leave the ignition switched on for long periods without the engine running, since although the engine ignition system itself draws no current when the engine is stopped, a battery drain will occur through other circuits even when auxiliary equipment is not being used.

For security reasons, and to guard against battery drain, always remove the key when leaving the car.

WARNING:

- **Do not push or tow the car unless the key is first used to unlock the column and is then left in the lock.**
- **Never withdraw the key until the vehicle is stationary.**
- **To reduce the risk of theft, or danger to a child remaining in the vehicle, always remove the key when leaving a parked car.**

Tell Tale Lamps

A block of tell tale lamps is incorporated into the instrument cluster to indicate the operational status of various systems.

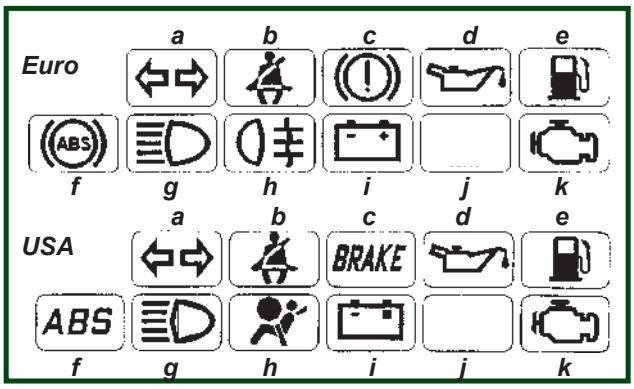

Bulb Check

In order to check that the warning systems are operative, all the tell tale lamps (except the 'security' tell tale; see Vehicle Security Alarm) should light for about six seconds following ignition switch on. If any lamp should fail to light, it is possible that the bulb or warning circuit may be faulty.

S.I.R. (Airbag) Tell Tale (USA h)

The Supplementary Inflatable Restraint system has a self-diagnostic facility which lights the red tell tale if a fault is detected. As a bulb and circuit check, the tell tale will light briefly when the ignition is switched on, and then go out. If the lamp lights at any other time, a fault in the S.I.R. system is indicated, which should be rectified without delay.

Turn Tell Tale (a)

When the left hand or right hand turn indicators are operating, this green tell tale flashes in unison. The flasher relay may also be heard to operate. If the tell tale fails to light, or flashes at an unusual or irregular rate, check the operation of the turn indicator lamps immediately.

Downloaded from www.Manualslib.com manuals search engine

Seat Belt Tell Tale (b)

The red seat belt tell tale is provided as a reminder that both driver and passenger should always wear the seat belts, no matter how short the journey. The lamp will light for about 8 seconds following ignition switch on, before being extinguished. On USA market cars, and other markets from December 2005, the lamp will flash until the driver's seat belt is fastened, accompanied for the first eight seconds by an audible chime.

Brakes Tell Tale (c)

This tell tale will glow red with the ignition switched on whenever the parking brake is applied. Driving the car with the brake not fully released will cause overheat damage to the rear brakes. Each time the parking brake is released, check that the tell tale is extinguished.

With the parking brake released, if the tell tale should light at any time after the check period, stop the car immediately, as the circuit has detected a dangerously low level of brake fluid in the master cylinder reservoir, possibly caused by a hydraulic leak in one of the separate front or rear brake circuits. There is a danger that air may enter the hydraulic system and cause spongy operation and extended pedal travel. The divided brake circuit should ensure that emergency braking remains, but the car should not be driven until the fault has been identified and rectified.

Oil Pressure Tell Tale (d)

This red tell tale warns of low engine oil pressure. The lamp will be lit whenever the ignition is on and the engine is stopped, but should extinguish as soon as the engine is started. If the lamp fails to go out after engine start up, or comes on when the engine is running, stop the engine immediately and do not restart until the cause has been investigated and rectified. Continuing to run the engine with little or no oil pressure could cause major internal damage, possibly resulting in seizure.

Low Fuel Level Tell Tale (e)

When only a single segment of the fuel gauge bar graph remains, representing approximately 5 litres, this amber tell tale will flash. Refuel at the next opportunity.

ABS Tell Tale (f)

This amber tell tale should light for about four seconds following ignition switch on, and then go out. If the lamp remains lit, or comes on whilst driving, a fault in the ABS is indicated. The base brake system will continue to operate normally, but without ABS regulation. The car can be driven but should be checked and repaired at the earliest opportunity.

Main Beam Tell Tale (g)

This lamp glows blue whenever the headlamp main beams are operating.

Rear Fog Lamps Tell Tale (Euro h)

This lamp glows amber whenever the rear fog lamps are operating (see ‘Rear Fog Lamp Switch’).

Battery Charging Tell Tale (i)

This red tell tale will light whenever the ignition is on and the engine is stopped. If it lights any time that the engine is running, the battery is not being charged, which may be due to a broken alternator drive belt, or an electrical fault. Urgent attention is required, but as the engine coolant pump is independently driven, the car need not be stranded, subject to battery condition and local circumstances.

Malfunction Indicator Lamp (k)

The engine Malfunction Indicator Lamp (MIL) is provided to warn the driver that the engine management system has detected a fault which may result in increased noxious emissions from the exhaust. In order to minimise emissions and potential engine damage, various operational limitations may automatically be applied.

i) If the MIL lights continuously whilst driving, immediately reduce speed and adopt a moderate driving style. Seek dealer advice without delay and avoid all unnecessary journeys.

ii) If the MIL flashes, an engine misfire has been detected which is likely to cause overheat damage to the catalytic converter. Slow down immediately and be prepared to stop.

- If the MIL then stops flashing, and is lit continuously, proceed with caution and seek dealer advice.
- If the MIL continues to flash, stop the vehicle as soon as it is safe to do so, and switch off the engine. Seek dealer advice.

Downloaded from www.Manualslib.com manuals search engine

Note:

- Continuing to drive the car with a flashing MIL may cause overheat damage to the catalytic converter and increased noxious emissions.
- In order to comply with emissions regulations, data regarding activation of the MIL is recorded in the engine electronic controller, and may be downloaded by Lotus dealers.

Security/RPM Tell Tale

The security tell tale is located at the top of the tachometer display, and indicates the status of the immobiliser and alarm.

- Tell tale out; engine is mobilised, and the alarm is off.
- Tell take flashing; engine is immobilised, or alarm is armed and engine immobilised.

For full details of the vehicle security system, refer to the earlier section 'Vehicle Security'. Note that the tell tale also functions as a high engine speed (rpm) warning - see 'Tachometer'.

Instruments

Speedometer

This instrument displays road speed in either MPH (with a secondary scale in km/h), or km/h according to market.

Tachometer

The tachometer indicates engine speed in revolutions per minute. A safeguard in the engine management system limits the maximum continuous engine speed to 8000 rpm once normal running temperature has been attained. Very short bursts up to 8500 rpm are allowed during maximum acceleration through the lower gears. A 6000 rpm limit is imposed on a cold engine in order to reduce possible damage from unsympathetic use. The use of wide throttle openings and/or high rpm before normal running temperature has been reached will result in premature wear and should be avoided. Do not run the engine continuously at its maximum speed, or allow overspeeding to occur on the overrun by changing down through the gears too early, as this imposes very high loads on engine components, resulting in premature wear and possible failure.

A red tell tale lamp in the top of the tachometer face lights at high rpm (dependent on gear engaged) to warn that maximum engine speed is being approached. When exploiting full acceleration, gearchange upshifts should be made immediately the tell tale lights. Note that this lamp also functions as a security system tell tale (see 'Vehicle Security').

Recalibration of the tachometer needle position will occur during a three second period following ignition switch on, but if a needle becomes 'stranded' outside of the re-calibration range, the following procedure should be followed:

With the vehicle stationary;

- On airbag equipped cars, first remove fuse C3 (beneath fascia);
- Open driver's door;
- Press and hold trip reset button on column shroud;
- Turn on ignition;
- Turn off ignition and refit fuse C3.

If this procedure should fail to zero the needles, the battery should be disconnected for 10 seconds.

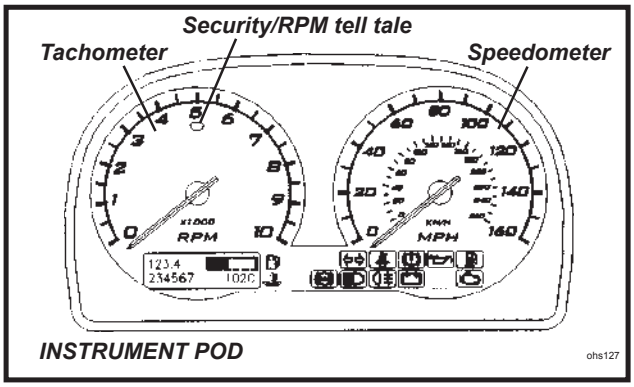

INSTRUMENT POD

Downloaded from www.Manualslib.com manuals search engine

LCD Panel

A liquid crystal display (LCD) panel is provided below the instruments in order to display fuel level, coolant temperature, total mileage and trip functions. The panel is blank until the ignition is switched on.

Fuel Contents Display

An indication of the level fuel in the tank is displayed in the form of a bar graph at the right hand top of the LCD panel in the instrument cluster. When completely full (approximately 43.5 litres (9.6 U.K. gal), the display will show six black segments. As the fuel level falls, a white band will extend from the right to represent the empty portion.

When only a single segment remains, representing approximately 5 litres, the amber low fuel tell tale will flash. Refuel at the next opportunity.

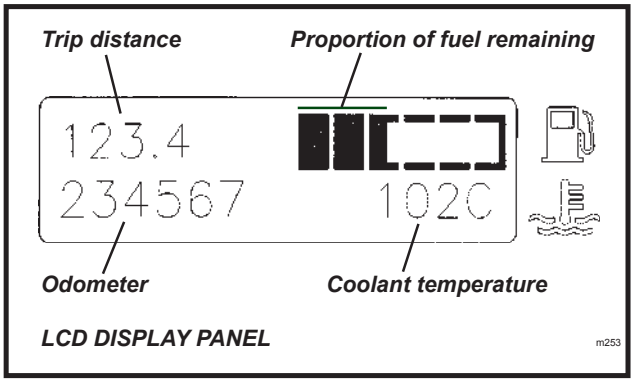

LCD DISPLAY PANEL

Coolant Temperature Display

The engine coolant temperature will be displayed at the bottom right hand corner of the panel as soon as the temperature reaches 72°C. The running temperature will fluctuate a certain amount as the operating conditions change, and during periods of idling or in heavy traffic, the temperature may rise to over 100°C, with the cooling fans switching on at half speed at approximately 98°C and at full speed at approximately 103°C. The display will flash at temperatures over 110°C in order to prompt closer monitoring of high temperatures, but as the pressurised cooling system has a boiling point of over 120°C, only if the temperature approaches this level need there be any cause for concern. If this should occur, allow the engine to idle for a few minutes whilst monitoring the temperature, and if it continues to rise, switch off and seek qualified assistance.

After a heavy snowfall, ensure that the radiator cooling outlet grilles in the front body are cleared of snow before driving the car, or overheating may occur.

Odometer

An odometer (total distance recorder) reading is displayed at the bottom left hand corner of the panel, and is calibrated in the same units (miles or kilometres) as is the speedometer.

Trip Recorder

A trip recorder is provided at the top left hand corner of the panel, calibrated in the same units as is the speedometer.

In order to zero the trip display, switch on the ignition, and press for a moment (less than 1 second), the small button on the steering column shroud between the ignition switch and steering wheel. This dual function button also controls the panel illumination - see 'Instrument & Switch Illumination'.

Fascia Switches

Lighting functions are controlled by a vertical row of three push button switches mounted in the fascia outboard of the steering column. Each switch is pressed once to switch on, and pressed a second time to switch off. A symbol is positioned alongside each switch to indicate its function, and is backlit orange when the lights are switched on.

Sidelamp Switch

The topmost switch functions with or without ignition, and switches on the sidelamps. A tell tale in the switch button lights up green to indicate when the circuit is active. Note that the headlamps must be off before the sidelamps can be switched off.

Headlamp Switch

The centre switch functions with or without ignition, and switches on the headlamps together with the side-lamps if not already selected by the sidelamps switch. A tell tale in the switch button lights up green to indicate when the circuit is active. The steering column lever switch (see later) is used to select main beam or dip.

Pressing the switch a second time will switch off the headlamps, but leave on the sidelamps.

Downloaded from www.Manualslib.com manuals search engine

Lights On' Buzzer

A 'lights on' reminder buzzer will sound if the lights are on when the ignition is switched off and the driver's door is opened.

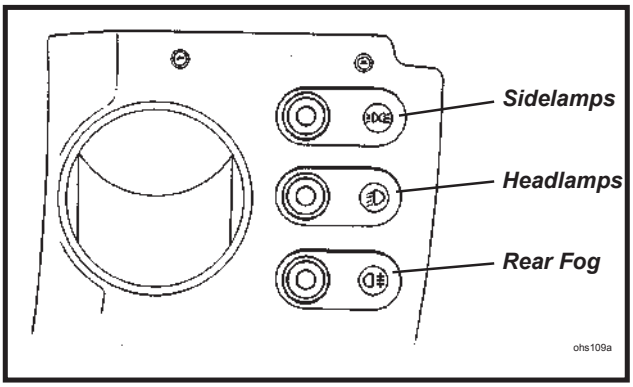

Rear Fog Lamp Switch

The lowermost switch controls the two rear fog lamps (where fitted), and may be selected only after first switching on the ignition, and then the headlamps. A tell tale in the switch button lights up amber to indicate when the circuit is active.

Note that the switch will default 'off' whenever the headlamps or ignition are switched off, requiring re-selection if lamp acivation is again desired.

In some territories, rear fog lamps may be used legally only in conditions of 'seriously reduced visibility'. Be aware that indiscriminate or forgetful use of the rear fog lamps can cause distraction and discomfort to following traffic.

Hazard Warning Lamps Switch

The hazard warning switch is located immediately ahead of the gear lever in the centre shroud, and has an icon in the switch button which is back lit when the ignition is switched on. The switch is operative at all times, and when pressed flashes all the turn indicator lamps, and the switch tell tale, in unison. Press a second time to switch off.

This facility should be used when the vehicle has to be stopped on the highway in abnormal circumstances, where a warning to other traffic would be judicious. Use of the hazard warning lamps may be subject to local traffic laws, with which drivers should familiarise themselves.

Instrument Illumination

A small button is provided on the steering column shroud, between the ignition switch and steering wheel, by which the brightness of the instrument illumination may be adjusted. To cycle through the range of brightness, press and hold the button, and release at the desired setting.

This dual function button also resets the trip distance recorder - see 'Trip Recorder'.

Auxiliary Power Socket

An auxiliary power socket is fitted in the centre trim shroud below the oddments pocket on the rear bulkhead. The socket is operative at all times, and is provided with a protective hinged flap and an illumination ring which is backlit red when the lights are switched on.

The format of the socket allows a standard cigarette lighter element to be used, or other electrical accessories requiring this type of fitting. Maximum current draw should not exceed 15 amps.

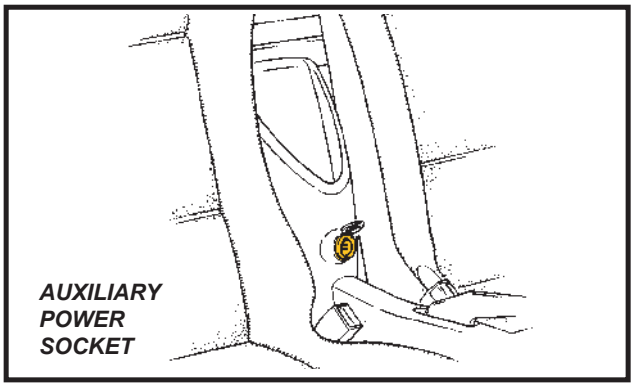

Downloaded from www.Manualslib.com manuals search engine

WARNING: Do not leave small children unattended in the car since careless interference with the power socket could be dangerous.

Headlamp Dipswitch/Flasher/Turn Indicators

The steering column left hand lever switch controls the headlamps main beam/dip, headlamp flash and turn indicators.

Headlamp Dipswitch: To switch on the headlamps, press the headlamp switch in the fascia outboard of the steering column. The left hand lever switch is then used to select main or dip beam. Main beam is obtained with the lever furthest forward, away from the steering wheel, and dip beam with the lever moved back towards the wheel. The main beam tell tale lamp in the instrument panel lights when main beam is operating.

Note: i) When main beam is selected, the dip beam lamps remain lit. ii) On cars equipped with optional auxiliary main beam lamps mounted in the radiator air intake, the auxiliary lamps operate in conjunction with the body mounted headlamp main beams.

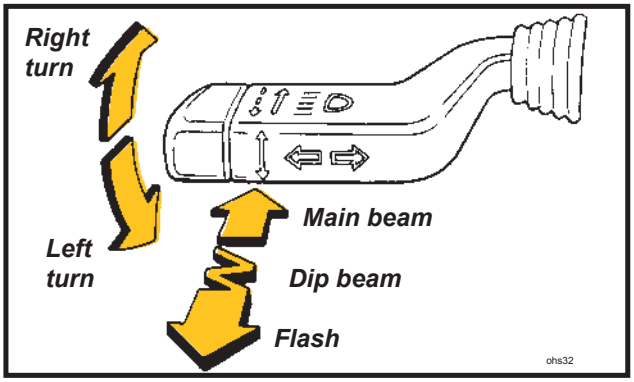

Headlamp Flasher: The headlamp flasher is operative at all times. If the lever is pulled towards the steering wheel against spring pressure, the headlamp main beams will light.

Turn Indicators: The turn indicators operate only with the ignition switched on. Move the lever down to indicate a left hand turn, and up for a right hand turn. The switch will be cancelled when the steering wheel is returned to the straight ahead position.

For convenience, when signalling a lane change, lightly pressing the switch up or down will allow its return under spring action.

Windscreen Wiper/Washer

The steering column right hand lever switch controls the windscreen wiper and washer, and is operative only with the ignition switched on. Never use the wiper on a dry screen.

Windscreen Wiper: The wiper is controlled by the up/down position of the lever switch, which operates as follows:

Moved fully down, the wiper is switched off.

Move up to the first position for intermittent wipe. The wiper will make one sweep about every five seconds.

Select the next position for normal wiper operation.

Move fully upwards for quick wipe, to be used only in heavy rain.

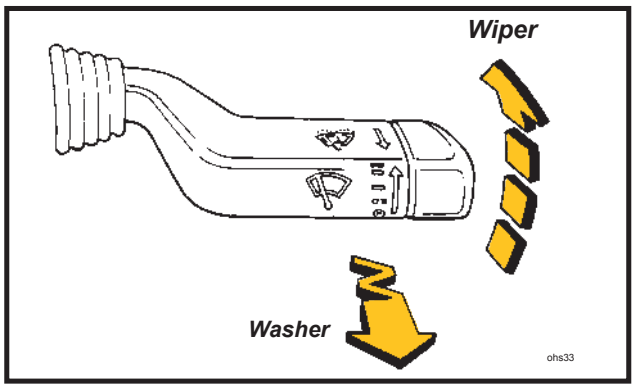

Windscreen Washer: Two windscreen washer jets are provided, one each side of the wiper spindle. Pulling the control lever towards the steering wheel will operate both the washer pump and the wiper. When the switch is released, the wiper will continue for a further four sweeps.

Horn

The windtone horn, which functions at all times, is operated by a central button in the steering wheel boss.

Interior Lamp

An interior lamp is mounted centrally in the rear bulkhead trim panel and is equipped with a three position rocking lens:

Downloaded from www.Manualslib.com manuals search engine

- Lens rocked upwards; lamp is switched off. **NOTE: On USA cars, arming the alarm with the interior lamp switched off may exclude the doors from activating the alarm.**
- Lens central; lamp is switched on, with or without ignition.
- Lens rocked downwards; a courtesy mode applies, where the lamp is switched on whenever a door is opened, and goes out when the doors are closed. In addition, the alarm disarm command will also light the interior lamp for a period of 30 seconds, or until the ignition is switched on.

Inertia Switch

The safety inertia switch is designed to operate on impact, typified by vehicle collision, to switch off the fuel pump, and thus minimise any fire hazard. The inertia switch is mounted at the left hand rear corner of the engine bay, and is reset by pressing the rubber diaphragm button on the top of the unit.

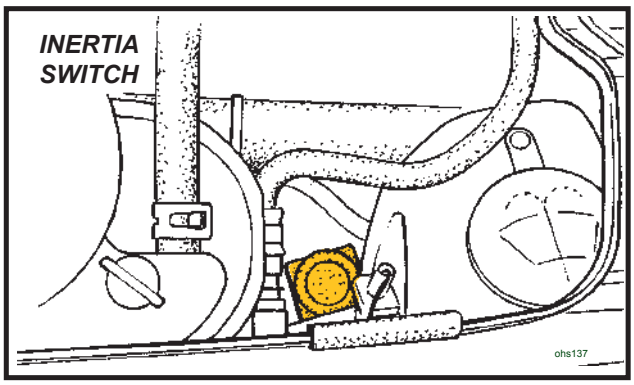

MP.5 - COMPONENT LOCATION & FUSE RATINGS

Main Fusebox

The main fusebox is located in the front services compartment, on the passenger side, and is protected by a plastic cover. For access, remove the passenger side front body access panel, and unclip the fusebox lid. Twenty two slots are provided for 'Littel' type fuses which are numbered, and coloured according to their amperage rating, and may be pulled out from their slots using the fuse extractor tool provided on the fusebox lid.

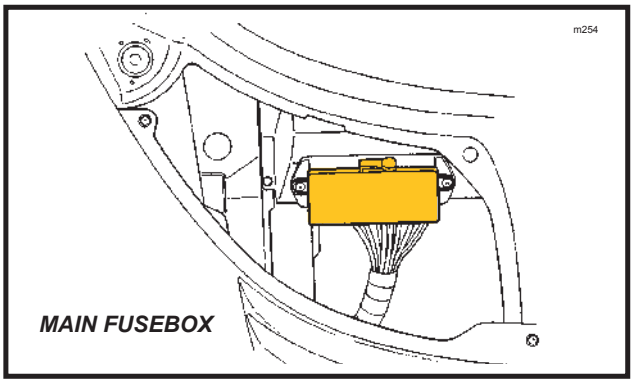

As viewed from in front of Elise:

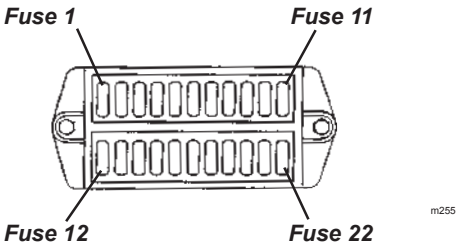

Slot	*Rate*	*Circuit*
1	20A	Aux. power socket
2	2A	non USA: Alarm siren
		USA: Reverse lamps
3	20A	Driver window
4	20A	Passenger window
5	7.5A	Stoplamps
		non USA: Reverse lamps
6	7.5A	Turn indicators
7	10A	Ignition services
8	7.5A	Battery services
9	10A	Hazard lamps
10	7.5A	Horn
11	10A	Alarm power,interior lamp
12	10A	ABS
Slot	*Rate*	*Circuit*
13	3A	ECU ignition
14	20A	Rad. fans;
		1&2 slow, 1 fast
15	7.5A	Radio, switch pack module
16	10A	Sidelamps
		non USA: Rear fog
17	10A	Dip beam LH
18	10A	Dip beam RH
19	20A	A.C. comp. relay,
		rad fan 2 fast
20	15A	Main beam LH
21	15A	Main beam RH
22	7.5A	CDL

Downloaded from www.Manualslib.com manuals search engine

Engine Compartment

Fuses and relays associated with the engine management system are contained in two 4-position fuse holders located at the front of the engine bay on the cabin bulkhead, adjacent to the engine ECM. To access the fuses, unclip rear edge of the cover.

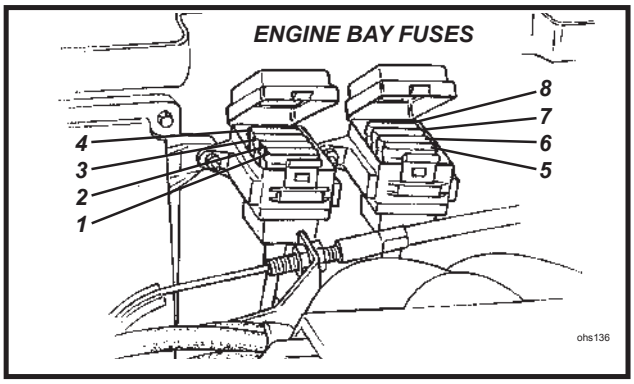

Fuse no.	*Rating*	*Circuit*
R1	20A	Fuel pump
R2	3A	Immobiliser
R3	5A	Alternator sense
R4	5A	ECU battery feed
R5	5A	O2 heaters
R6	7.5A	VSV's VVT, VVL, IAC
R7	10A	Injectors, ignition coils
R8	5A	Re-circ. pump

Interior Fuses & Relays

The wash/wipe module, turn/hazard flasher relay, horn relay and a relay for inertia switch activation of the central door locking, are mounted on the scuttle beam above the passenger footwell, with four fuses secured to the harness in that area.

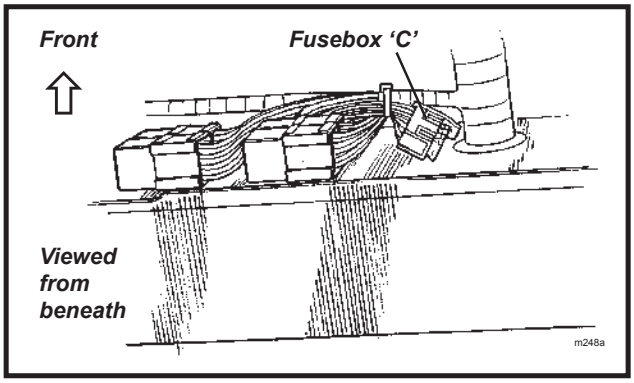

Fuse no.	*Rating*	*Circuit*
C1	20A	Interior fan
C2	15A	Wiper motor
C3	7.5A	Audio key-in
C4	10A	A.C. compressor

A 60A Maxi fuse protecting the ABS circuit is located beneath the passenger side fascia top, adjacent to the positive post.

A multi-function relay unit containing the engine control relay, fuel pump relay and starter relay is mounted in the engine bay near the ECU. A similar relay unit is mounted in the front services compartment alongside the fusebox, and operates the a.c. compressor and radiator fans. **Important Note:** Although the two modules are identical in appearance, their function is different and they must not be transposed. The a.c. relay module A117M0038F has a brown label marked YWB100800; The engine relay module A111E6024F has a white label marked YWB100970.

For the location of the vehicle alarm system components, see sub-section MP.1.

Fuse colours:

2A - Black 3A - Violet 4A - Pink 5A - Orange 7.5A - Brown 10A - Red
15A - Light Blue 20A - Yellow 25A - Clear

Relay Position

RHD:	Inboard top;	Wiper
	Inboard bottom;	Flasher
	Outboard top;	CDL trip
	Outboard bottom;	Horn
LHD:	Inboard top;	Flasher
	Inboard bottom;	Wiper
	Outboard top;	Horn
	Outboard bottom;	CDL trip

Downloaded from www.Manualslib.com manuals search engine

Component Location

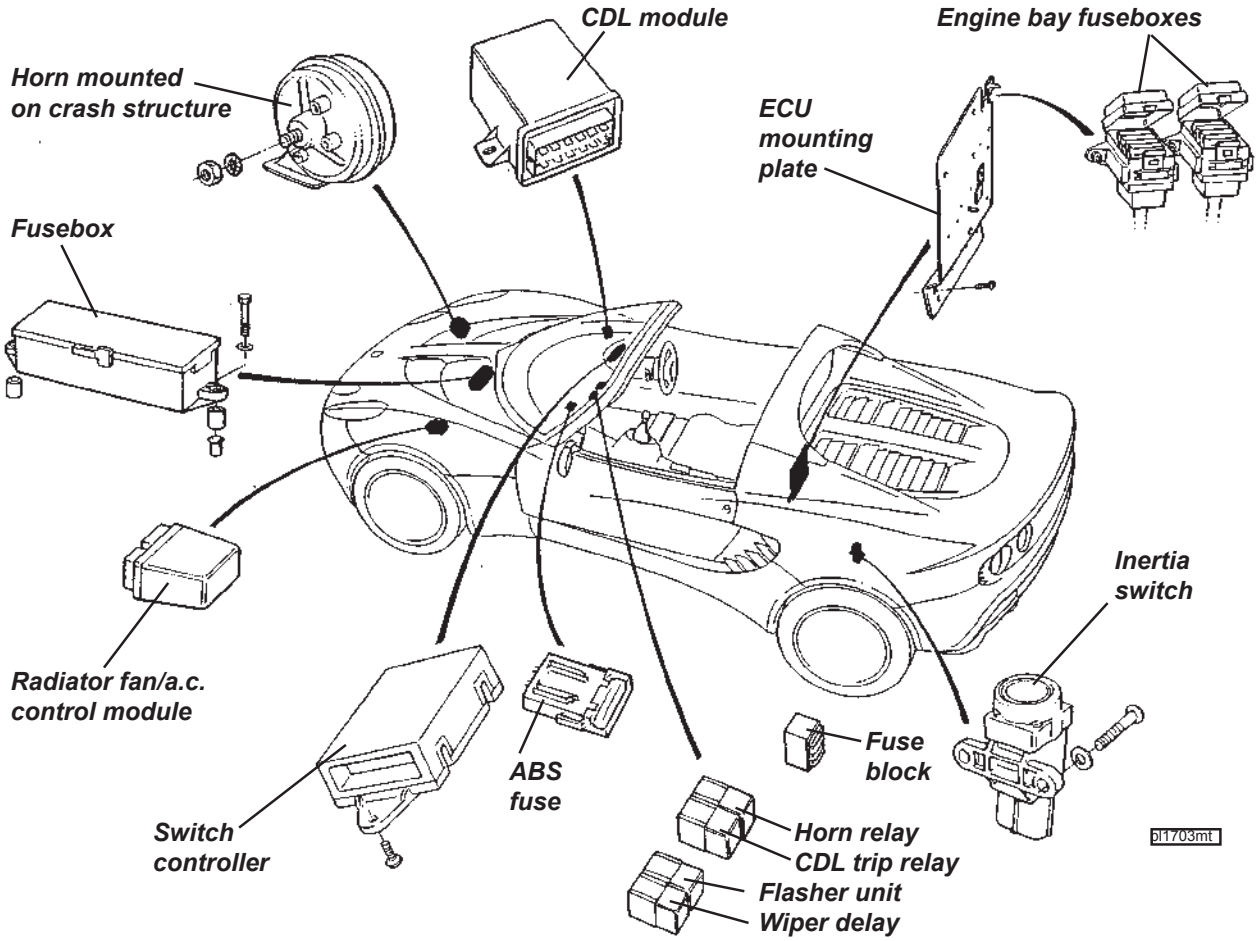

MP.6 - AUDIO EQUIPMENT

The Elise may be specified with various audio equipment options. All cars are fitted with a main wiring harness which includes: an ISO 16-way connector located behind the standard ISO size audio aperture in the dash panel; speaker wiring terminating behind the cabin LH rear corner trim panel; and an analogue di-pole aerial routed inside the front body. On cars factory built with a digital audio set, this aerial is supplemented by a digital di-pole aerial routed in a similar manner.

Speakers

'Two speaker' cars are fitted with a speaker in each cabin rear corner in a sound deadening full width rear bulkhead trim panel. An upgraded audio option uses the same rear speakers, in conjunction with a pair of front speakers, mounted one in each dash end panel. USA cars have the front speakers mounted in the fascia top panel.

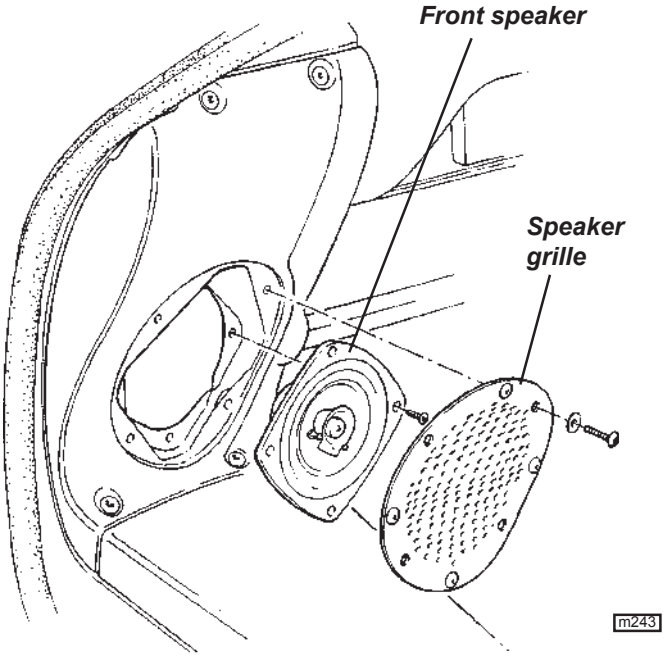

Downloaded from www.Manualslib.com manuals search engine

Speaker specifications are as follows:
Rear: Blaupunkt GTX 542 2-way co-axial; 90W max; 30W RMS; 4 ohms impedance.
Front: Blaupunkt TSX 402 2-way co-axial; 105W max; 35W RMS; 4 ohms impedance.

To remove the rear bulkhead trim panel, remove the four screws securing the top edge of the panel to the bulkhead plinth, and ease the panel from behind the seat belt mounting frame at each side.

MP.7 - BATTERY, BATTERY CABLES & EARTHING POINTS

Battery

WARNING: POISON/DANGER - CAUSES SEVERE BURNS - KEEP OUT OF REACH OF CHILDREN. Contains sulphuric acid - avoid contact with skin, eyes or clothing. If in contact with skin or eyes; flush with copious amounts of water. Remove contaminated clothing. Seek immediate medical attention. If ingested; seek immediate medical attention . Do not induce vomiting or give fluids to drink. Batteries produce explosive gases. Keep sparks, flames and cigarettes away. Ventilate when charging or using in enclosed space. Always shield eyes when working near batteries.

Battery Access

The 45 Ahr Yuasa type 063/3 battery is located at the left hand front of the rear luggage compartment. No routine inspection or topping up of the electrolyte is required, but at intervals specified in the Maintenance Schedule, the battery terminals should be checked for security and condition, and protected with petroleum jelly.

To remove the battery, unhook the plastic cover, disconnect both battery cables (see below), and pull off the breather pipe (if applicable). Release the single screw securing the clamp bracket at the rear base of the battery, and manoeuvre the battery from the base retaining shoes at the front and right hand side. When lifting out the battery, be aware of the considerable weight, and take all appropriate precautions to safeguard personal health.

Refit the battery, with its terminals inboard, by reversing the above procedure. Remember to push on the breather pipe (if applicable), and reconnect the battery cables as detailed below.

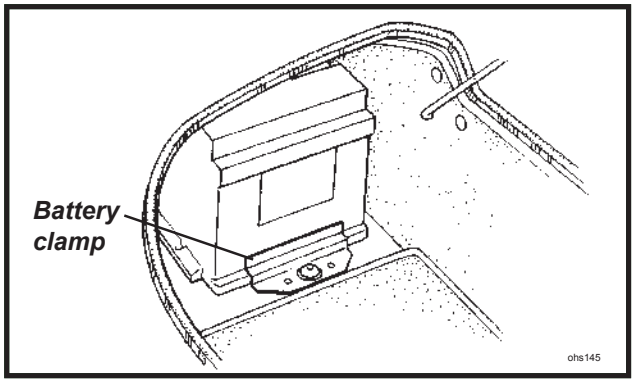

Disconnecting the Battery

If the battery is to be disconnected, the following precautions should be taken:

i) Wait for at least ten seconds after switching off the ignition to allow the engine management system to adjust the setting of some components ready for re-starting.
ii) If the car is fitted with the upgraded security alarm, immediately before disconnection, mobilise the engine using the transmitter button with ignition off, and disconnect the battery within 25 seconds. If disconnected after this time, or when immobilisation is in effect, the alarm will be triggered.
iii) Ensure that all electrical loads (e.g. lights) are switched off.
iv) Disconnect the negative (earth; black; '-') battery cable first, and re-connect last. If the battery positive terminal is inadvertently earthed (e.g. when using a spanner) whilst the negative terminal is still connected, the resultant short circuit with heavy sparking and current flow could cause serious burns.
v) If the vehicle is fitted with security coded audio equipment, check that the code is available for entering after battery reconnection.

Downloaded from www.Manualslib.com manuals search engine

Battery Reconnection

i) Check again that all electrical loads are switched off.
ii) Connect the positive battery cable first, followed by the negative (earth) cable.
iii) Be aware that the vehicle security alarm may be triggered by the action of battery re-connection. Have the alarm transmitter key ready to disarm the alarm (see 'Vehicle Security Alarm').
iv) After reconnection, a change in the engine performance characteristics may be noted for a period whilst the computer controlled engine management system 're-learns' some of its settings.
v) If necessary, enter the security code into audio equipment.

Battery Charging

Under conditions of normal daily use, it should not be necessary to use external battery charging equipment. In a low usage regime, however, it is important to maintain the charge state of the battery using a trickle charger, or an automatic battery management charger such as that available through Lotus After Sales. Such devices, when connected to a vehicle battery, continuously monitor battery charge state and switch on and off automatically in order to maintain the battery in a fully charged state without danger of damage through overcharging.

If the battery becomes discharged to the extent that the vehicle cannot be started, the recommended course of action is to fit a substitute battery whilst the original battery is trickle charged. If, in an emergency, the vehicle has to be 'jump' started, the subsequent conditions of vehicle use may not allow for sufficient alternator charging of the battery to achieve a fully charged state. The battery should be trickle charged until 12.8 volts is recorded, which process may take 24 hours or longer. Putting the battery into service at a lower state of charge will reduce the time period for which the vehicle can be parked. A battery left in a fully discharged state for a prolonged period, may not be recoverable to its original condition.

Unless using an automatic battery management charger, the battery should be removed from the car for recharging, to a well ventilated area to avoid a build up of fumes in the luggage compartment and to prevent damage to the car's electrical system. Observe the safety precautions listed above when removing the battery and take care to avoid sharp knocks or shocks, keeping the battery as upright as possible. Beware of the considerable weight of a battery, and take necessary precautions against personal injury.

Check that the electrolyte level is between the upper and lower markers on the battery case, and if necessary add distilled water. The recommended bench charge rate is 4 amps. When the battery is fully charged (12.8 volts), allow the battery to stand for an hour before refitting into the battery well and reconnecting the leads - see above.

Quiescent Drain

With a fully charged battery, the current drain with all electrical equipment switched off (no radio fitted) should be as follows;

Immobiliser active	15 mA
Alarm set	20 mA

If current drain is found to be significantly in excess of these figures, the cause must be established by isolating components (e.g. at fusebox) and rectifying faults as necessary.

Battery Cables

The main battery positive cable runs from the battery to a binding post mounted on the engine ECU plate, itself fixed to the engine bay bulkhead. From this post, one cable loops to the starter motor and then to the alternator, and another is routed through the LH sill, fixed to the outside of the chassis LH side rail together with the heater return pipe, clutch hydraulic hose and servo vacuum hose, and penetrates the scuttle baffle panel to a second positive post mounted on the top of the scuttle beam. This post is used to distribute power to the main fusebox and other front end circuits.

The battery earth cable connects to a chassis earth point on the inside surface of the LH chassis rail at the side of the engine bay, accessible from beneath. From here, an earth braid connects with the ECU plate and also with the transmission casing. A second earth point is used at the front of the chassis to provide for front mounted components, and is located within the front services compartment on the inside surface of the chassis LH siderail. Each chassis earth point uses an M8 threaded insert and on some cars, a special stepped washer which must be fitted the correct way round in order to contact the chassis (anodisation removed around insert). The chassis and cable earth terminals should be coated with petroleum jelly to protect from corrosion.

On the Exige, positive and negative posts are provided on the passenger side in the front services compartment in order to allow for jumper cable connection on a car with a flat battery, when release of the engine cover is not available.

Downloaded from www.Manualslib.com manuals search engine

Battery cables; positive & negative posts

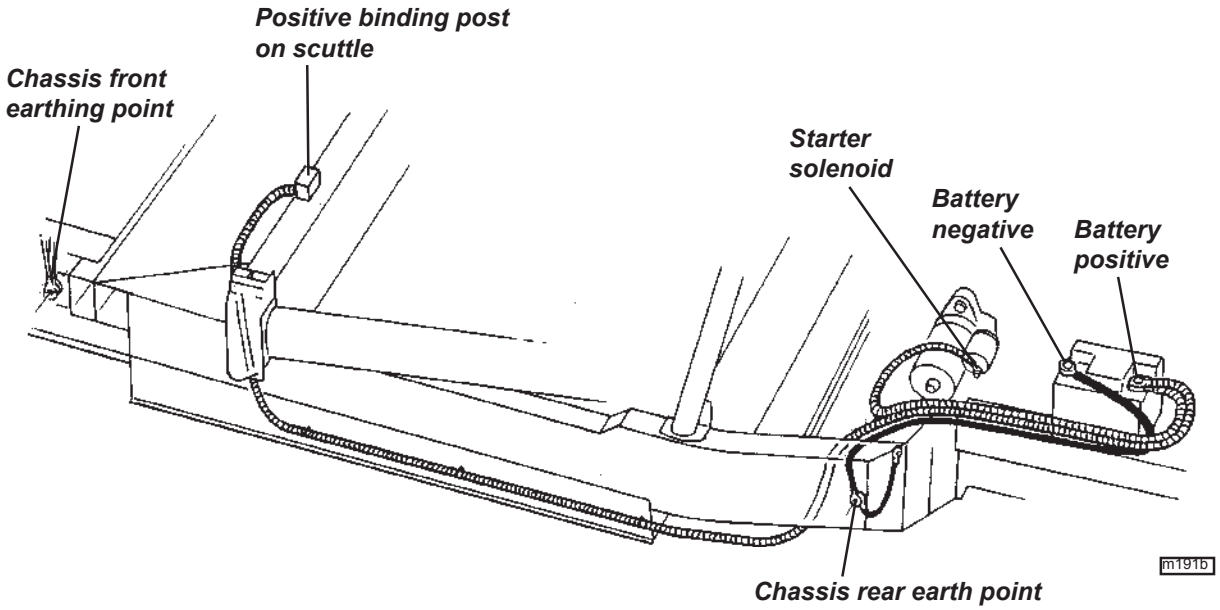

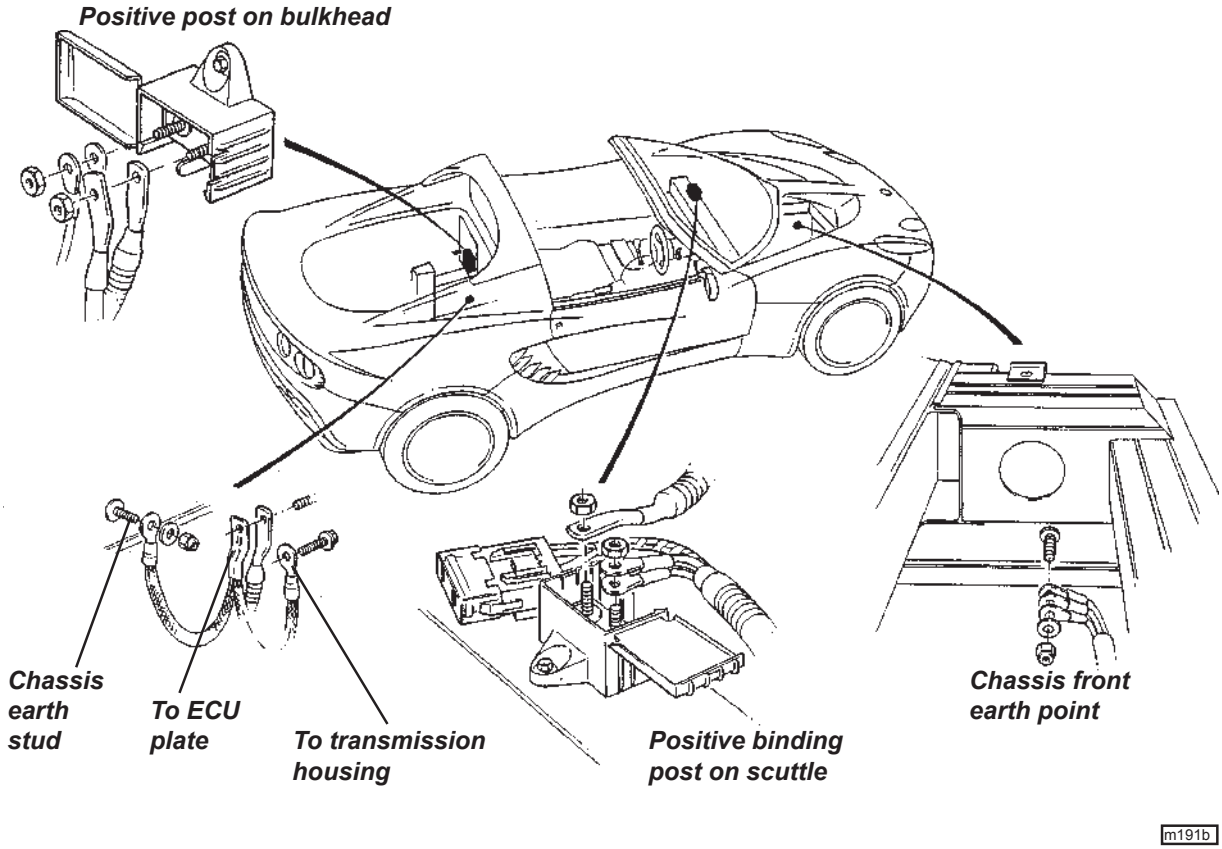

Downloaded from www.Manualslib.com manuals search engine

MP.8 - WIPER MECHANISM

The windscreen wiper mechanism comprises a uni-directional motor with an external rotary link, a connecting rod, and a pair of actuating links which join the connecting rod to the arms of the wiper spindle. This mechanism provides the wiper with a motion which is slowed at each end of its travel in order to ease the inertia loads during direction changes, to the benefit of refinement and durability. The motor and wheelbox are mounted on a single fabricated steel bracket which is bolted to the windscreen scuttle panel.

To remove the wiper mechanism:

1. Remove the front clamshell (see sub-section BP.5).

2. Remove the wiper motor protective cover by releasing the two screws into the windscreen buttress, and the patch of adhesive between the inboard end and the screen gutter. Disconnect the harness plug from the motor. Disconnect the washer tubing.

3. Remove the wiper arm from the spindle, and the spindle rubber surround.

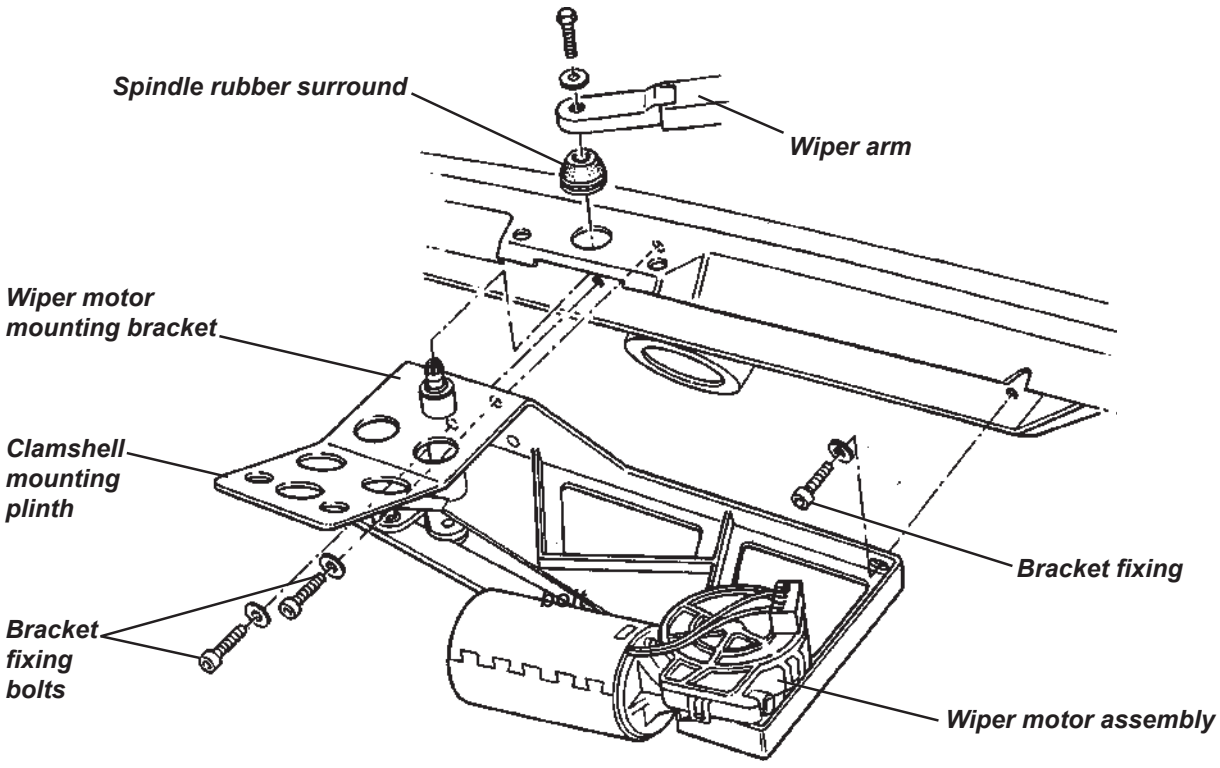

4. Release the three screws securing the motor mounting bracket to the windscreen frame - one at each side of the spindle, one at the motor end, and withdraw the complete mechanism from the car.

5. If the motor is separated from the mechanism, the position of the rotary link should be marked against the motor shaft for reference when re-fitting. The motor should be in the 'park' position before fitting, and the mechanism at full travel so that the rotary link and connecting rod are aligned in the fully extended position.

Downloaded from www.Manualslib.com manuals search engine

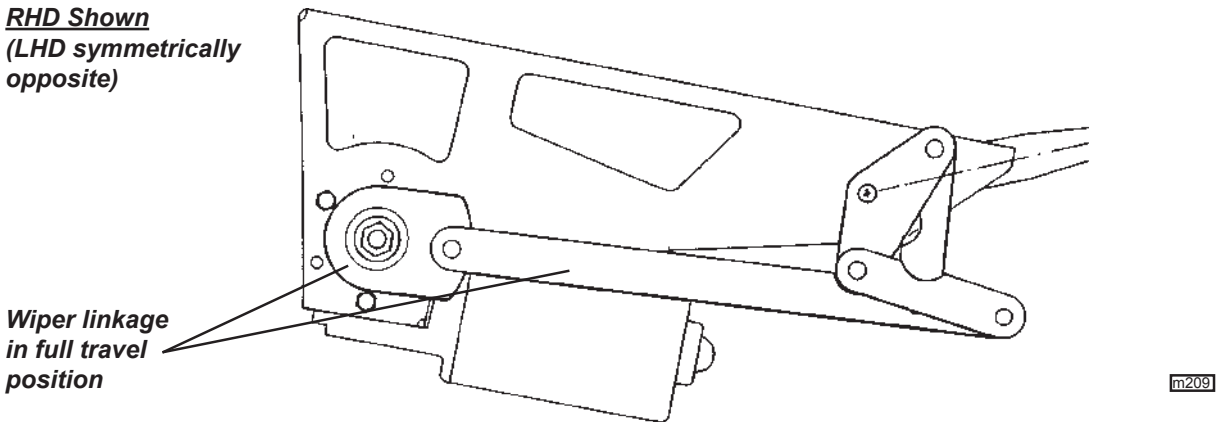

6. Re-assemble in the reverse order to removal, torque tightening the bracket bolts to 20 Nm.

MP.9 - HARNESS ROUTING

The main harness runs from the main fusebox/relay station at the passenger side of the front services compartment, and divides into three branches; one running forwards across the front of the chassis well to feed the interior fan motor, heater/a.c. functions, radiator fans and ABS controller, and then round the front of the crash structure to supply the horn and front lights. A second branch connects to the radiator fans/a.c. control module mounted on the passenger side wheelarch liner. The third brance runs rearwards through the scuttle where it divides again to run across the dash top, picking up on the positive post, and supplying the instrument pack and switchgear. The harness then runs along the cockpit centre tunnel to the rear of the cabin, over the top of the fuel tank bay, and through a grommet at the left hand rear corner of the cabin.

At the left hand front corner of the engine bay, one branch continues rearwards through a rear clamshell grommet to connect with the rear lighting harness routed inside the clamshell. Another branch runs across the engine bay/cabin bulkhead to the multi-function relay module and engine ECU. The engine harness connects to the ECU on the bulkhead.

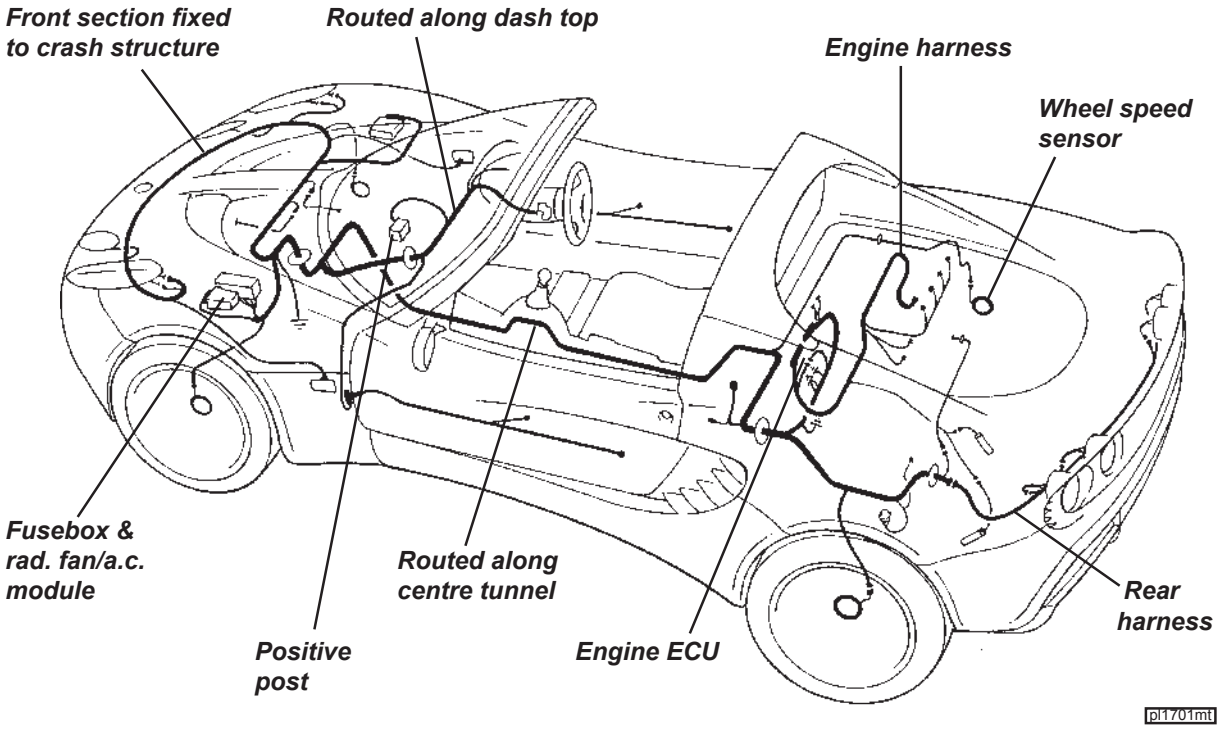

Downloaded from www.Manualslib.com manuals search engine

MP.10 - FRONT LAMP ASSEMBLIES

Headlamp Units - Prior '07 M.Y.

The front clamshell incorporates, at each side, a headlamp housing, in each of which are mounted a halogen projector type dip beam lamp (upper), and a halogen main beam lamp (lower), which also incorporates the sidelamp bulb. A moulded plastic mask and clear acrylic cover are bonded together and are fitted over each headlamp housing, with a rubber surround finisher, with the unit retained by three slotted thumbscrews accessible from within the front wheelarch. For access to the headlamps, release the three socket head screws and withdraw the headlamp cover assembly.

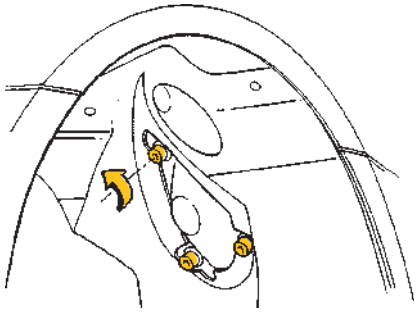

HEADLAMP COVER UNIT SOCKET BOLTS

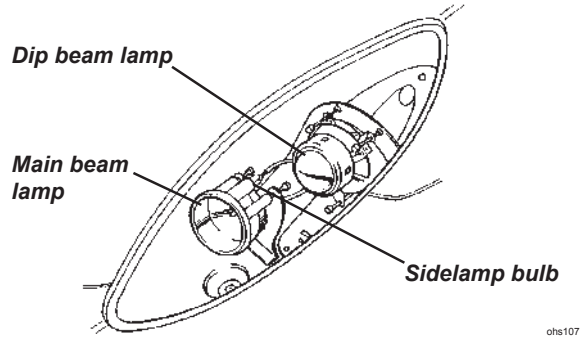

Headlamp bulbs may be replaced after disconnecting the cables (Dip; blue/yellow, black. Main; blue/black, black) and releasing the spring clip. Both the 55W H1 dip beam bulb, and the 55W H7 main beam bulb incorporate orientation features which must be correctly located on re-fitting. The holder for the T4W bayonet fitting sidelamp bulb may be twisted to release from the main beam headlamp.

If the car is to be used temporarily in an opposite drive hand territory, a masking lever incorporated in each dip beam headlamp should be moved to provide a horizontal cut off and prevent dazzle.

Headlamp Beam Alignment

1. Using beam setting equipment compatible with ECE Regulation No.48 for 76/756/EEC, position the machine between 300 and 700mm in front of the LH headlamp, and parallel with the two headlamp units using the sight bar or similar device dependent on the machine design, to ensure cross car match. Use the guides provided on the machine to ensure the correct height and lateral setting.

2. Switch on the headlamp dip beams (uppermost lamps), and check the lateral beam alignment. The 'knee point' of the beam cut off line must lie within a tolerance of 2% to the passenger side, and 0%.
   Check the vertical alignment of the dip beam which must lie within a tolerance of -0.5% and -2%.

3. If adjustment is required, from within each front wheelarch, using a 5mm hexagonal key, remove the three socket head screws securing the headlamp cover/masks, and withdraw the covers complete with rubber seal.

4. To adjust the dip beam laterally, adjust the dome headed screw at the upper inboard side of the dip beam (uppermost) lamp, accessed from the front of the lamp. Turn clockwise to adjust the beam to the right. Optimum setting is 0%.
   To adjust the vertical aim of the dip beam, adjust the dome headed screw at the lower outboard side of the lamp, accessed from the front. Turn clockwise to raise the beam. Optimum setting is -1.5%.

5. Repeat for the RH lamp.

6. Centralise the machine on the LH main beam (lowermost) lamp, and switch on the main beams. Check the main beam alignment which should be centralised with the marker dot on the machine screen or slightly below the horizontal. Optimum setting is 0%.
   - To adjust the main beam laterally, adjust the dome headed screw at the upper inboard side of the lamp,

Downloaded from www.Manualslib.com manuals search engine

accessed from behind the lamp. Turn clockwise to adjust the beam to the right.
- To adjust the vertical aim of the main beam, adjust the dome headed screw at the lower outboard side of the lamp, accessed from behind the lamp. Turn clockwise to raise the beam.

7. Repeat for the RH lamp.

8. Re-fit the cover/mask assemblies complete with edge seal to the body, and secure with the three socket head screws and washers.

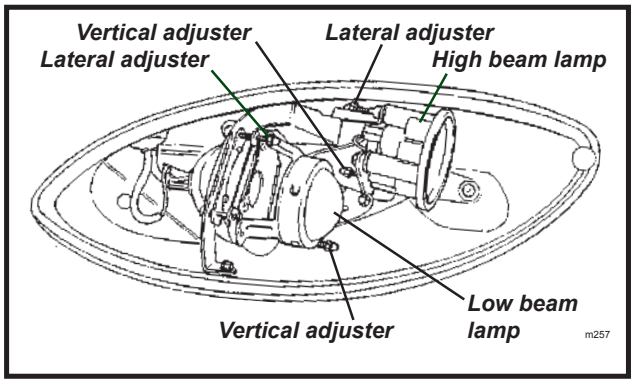

Headlamp Cover Seal

The headlamp cover/mask is sealed to the body aperture by an extruded synthetic moulding, supplied in straight lengths. The seal needs to be cut to length to be a snug fit around the periphery of the lamp and the two ends bonded together using a suitable adhesive such as Permabond C2 or similar. The seal is then fitted to the headlamp cover with the narrower face uppermost, and with the longer leg of the lower face against the mask.

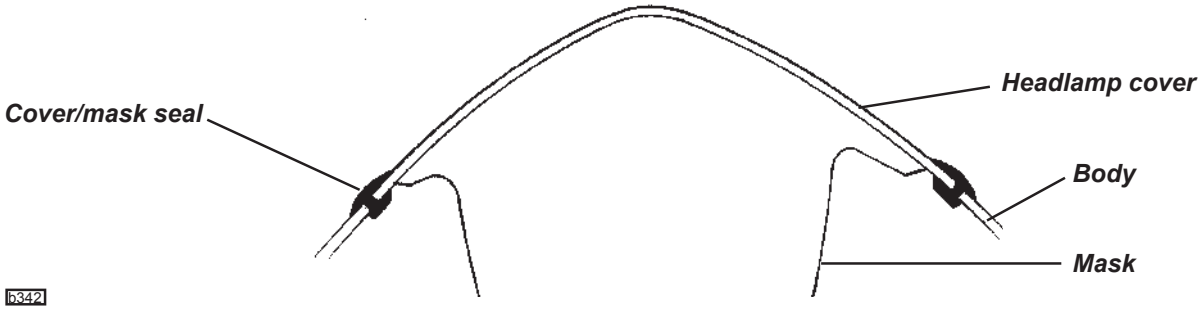

Headlamp Units - '07 M.Y. Onwards

New headlamp assemblies introduced for '07 model year are unchanged in styling, but are redesigned as sealed units to comply with legislative demands, and comprise main/dip/sidelamps with integral reflectors, mask and cover. An optical feature in the centre of the cover is designed to gather refracted light and prevent scatter above the dip beam cut off. Certain atmospheric conditions may result in some condensation inside the lamp unit, but this should disperse with the lamps in operation and cause no concern.

The main beam lamp is mounted lowermost as previously, and uses a free-form reflector and 55W H7U bulb. Above that is the projector type dip beam lamp with 55W H7U bulb, and at the top of the unit is the side/parking lamp with W5W bulb, the latter function formerly incorporated into the main beam lamp. Each complete lamp unit with hard coated polycarbonate cover is fitted to the body via a remodeled clamshell housing and is secured by three M10 and one M6 fixing. Note that the clamshell construction renders retrofitment of the new lamps to earlier models impracticable.

Access to the bulbs is available after removing the wheelarch liner front section, and then the appropriate grommet over the main or dip beam bulbs. The alignment relationship between main and dip beam lamps is fixed, but two cross-head adjusters are provided on the back of the headlamp housing by which the whole lamp unit may be adjusted. The outboard screw adjusts vertical alignment, and the inboard screw horizontal.

Downloaded from www.Manualslib.com manuals search engine

To remove a lamp unit from the car, remove the three M10 nuts and the single M6 nut securing the lamp assembly to the clamshell. On re-assembly, note that the jointline between lamp and body may be optimised via threaded collars on three of the lamp fixing studs.

Opposite Drive Hand Beam Masking: If the car is temporarily to be used in an opposite drive hand territory, the dip beam bias should be masked to prevent dazzle. The '07 model year lamps incorporate a masking lever within each dip beam lamp, accessible after removing the wheelarch liner front section and upper grommet. The lever incorporates a slot for a small flat bladed screwdriver, but is located in one of four different sites dependent on handing and market.

On RHD cars, the lever in both lamps should be turned clockwise to mask. ***The lever turns only a few degrees, requiring little force.*** Applying too much force or movement will damage the system. Feel for a slight click.

RH ***LH***

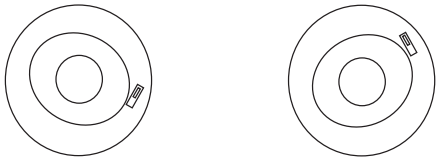

On LHD cars, the lever in both lamps should be turned counterclockwise to mask. ***The lever turns only a few degrees, requiring little force.*** Applying too much force or movement will damage the system. Feel for a slight click.

RH ***LH***

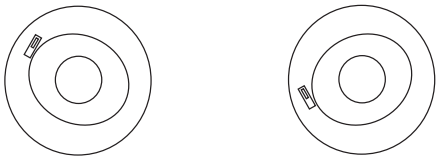

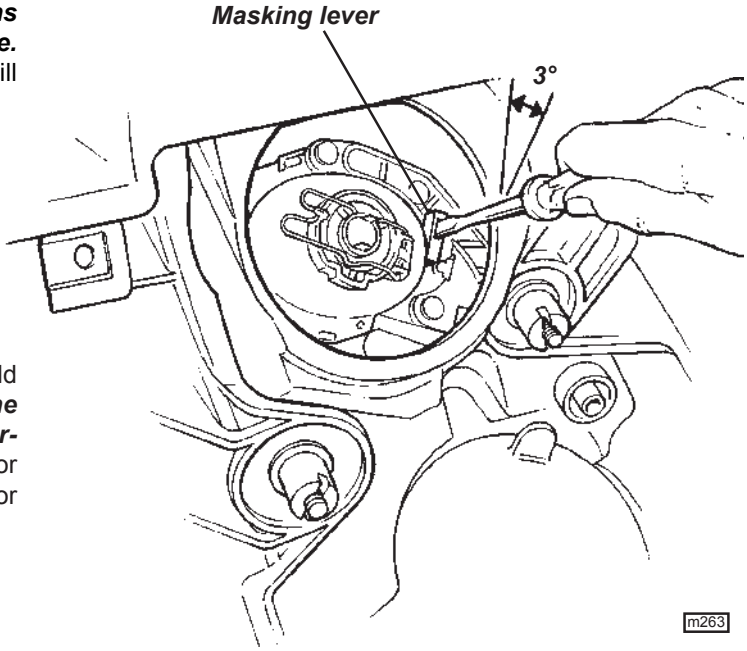

Front Turn Lamps

For access to the front turn indicator bulb, the lamp unit must be released from the body. Using a suitable stiff rod, via an access hole in the outer top corner of the air intake aperture, push backwards the retaining clip at the front corner of the turn lamp, and withdraw the lamp from the body. Introduced for the '06 M.Y. was a secondary security device in the form of an 'O' ring anchored to the crash structure and looped through the lamp front retaining clip.

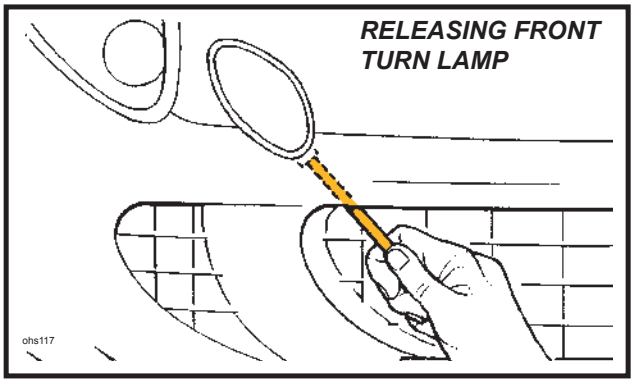

Twist the bulb holder counterclockwise to release from the lamp, and replace the bayonet fitting amber bulb. After replacing the bulb and holder, fit the seal around the periphery of the lamp, and engage the lamp unit top corner lip in the body aperture, before pressing the bottom corner until the spring clip is heard to engage. Ensure the lamp is securely fitted by attempting to extract the lamp from above, which should not be possible.

Downloaded from www.Manualslib.com manuals search engine

MP.11 - 2006 M.Y. SUPPLEMENT

Lotus Traction Control

Lotus Traction Control (LTC) is a software programme within the engine electronic control unit (ECU) which uses inputs from the wheel speed sensors to determine the degree of wheelspin occurring, and when necessary, modulate fuel injector delivery to control engine power output until grip is restored. If an LSD is fitted, the LTC also operates to stabilise high speed vehicle behaviour under high cornering loads or extreme manoeuvres.

An LTC tell tale is provided in the instrument panel, and if this lamp, together with the tell tale light in the LTC button (see below) is seen to flicker, this is an indication that traction control has been triggered and electronic intervention is taking place; the tractive limit has been reached and driving style should be modified accordingly. If the lamp is continuously lit, this is an indication that the LTC has been manually switched off (see below).

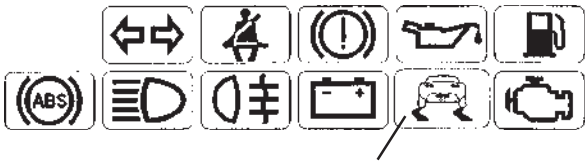

LTC tell tale (Euro shown)

WARNING: The enhanced vehicle control that this feature provides should not induce any relaxation of caution or vigilance by the driver. Physical limits of cornering and braking still apply, and excessive speed may result in loss of control and an accident. The driver is at all times responsible for the judgement of appropriate speed.

Lotus Traction Control 'Off' Button

In certain unusual circumstances, such as loose surfaces, deep snow or when 'rocking' the vehicle free from mud, it may be desirable temporarily to switch off the traction control. An LTC 'off' button is provided on the gear lever shroud, and should, with the ignition switched on, be held pressed for 2 seconds. Both the button tell tale and the LTC warning lamp in the instrument panel will light up amber to confirm system de-activation.

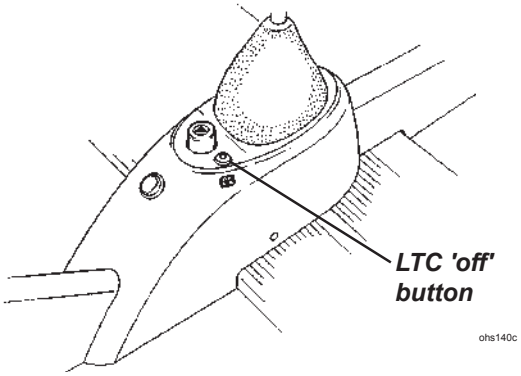

WARNING:

- **When an LSD is fitted, Lotus Traction Control should always be active when driving on the public highway in normal conditions.**
- **If the system is switched off when driving off-highway, be aware of the consequent change in vehicle behaviour and modify driving style accordingly.**

To re-activate LTC, press (momentarily) the button a second time and check that the tell tale lamps in both the switch button and instrument panel go out. Irrespective of the system status when the ignition is turned off, LTC will automatically be activated next time the ignition is switched on.

ECU Programming

The ECU progamming for '06 M.Y. cars includes Electronic Throttle Control (ETC) and Lotus Traction Control (LTC), and may be identified by interrogation using the Scan tool; Non-USA: A120E0030H. USA: A121E0010H.

In order for LTC to be operative, a new ECU must detect the presence of the LTC 'off' switch within the first 5 ignition cycles. If no switch is detected (the switch does not need to be activated), the LTC programme will be locked out indefinately, and can only be reset by Lotus Cars.

Downloaded from www.Manualslib.com manuals search engine

Fuses

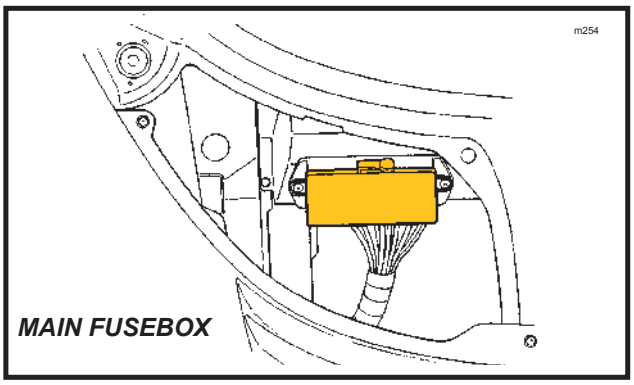

As viewed from in front of Elise:

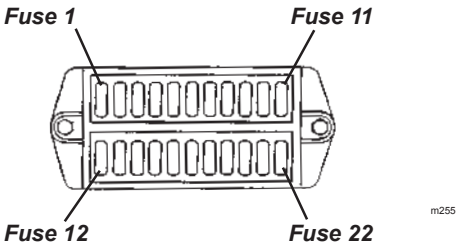

Slot	*Rate*	*Circuit*	*Supply*	*Slot*	*Rate*	*Circuit*	*Supply*
1	20A	Aux. power socket	Battery	14	20A	Rad. fans; 1&2 slow, 1 fast	Battery
2	5A	Reverse lamps	Ignition				
3	20A	Driver window	Ignition	15	7.5A	Radio, switch pack module	Battery
4	20A	Passenger window	Ignition	16	10A	Sidelamps, rear fog	Battery
5	10A	Stoplamps	Ignition	17	10A	Dip beam LH	Battery
6	7.5A	Turn indicators	Ignition	18	10A	Dip beam RH	Battery
7	10A	Ignition services	Ignition	19	20A	A.C. comp. relay, rad fan 2 fast	Battery
8	7.5A	Battery services	Battery				
9	15A	Hazard lamps	Battery	20	15A	Main beam LH	Battery
10	7.5A	Horn	Battery	21	15A	Main beam RH	Battery
11	10A	Alarm power,interior lamp	Battery	22	7.5A	CDL	Battery
12	10A	ABS	Ignition				
13	3A	ECU, starter switch, immobiliser	Ignition				

Engine Compartment

Fuses and relays associated with the engine management system are contained in two 4-position fuse holders located at the front of the engine bay on the cabin bulkhead, adjacent to the engine ECM. To access the fuses, unclip rear edge of the cover.

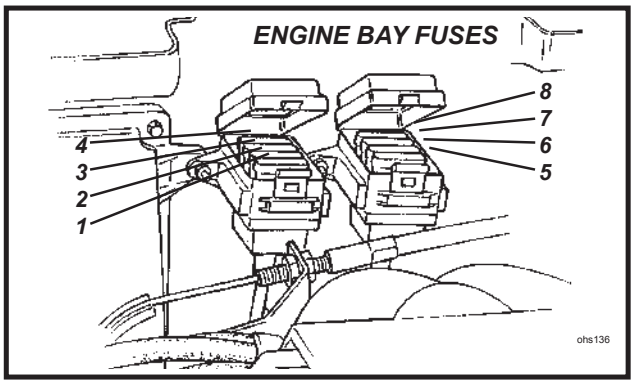

Fuse no.	*Rating*	*Circuit*	*Supply*
R1	20A	Fuel pump	Battery
R2	3A	Immobiliser	Battery
R3	5A	Alternator sense	Battery
R4	5A	ECU battery feed	Battery
R5	5A	O2 heaters	ECU
R6	7.5A	VSV's VVT, VVL, IAC	ECU
R7	10A	Injectors, ignition coils, ECU main pwr, ac module	ECU
R8	5A	Re-circ. pump	ECU

Downloaded from www.Manualslib.com manuals search engine

Interior Fuses & Relays

The wash/wipe module, turn/hazard flasher relay, horn relay and a relay for inertia switch activation of the central door locking, are mounted on the scuttle beam above the passenger footwell, with two 4-slot fuse holders secured to the harness in that area.

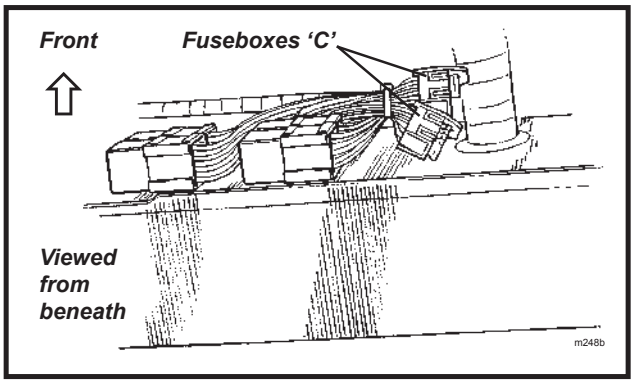

Relay Position

RHD:	Inboard top;	Wiper
	Inboard bottom;	Flasher
	Outboard top;	CDL trip
	Outboard bottom;	Horn
LHD:	Inboard top;	Flasher
	Inboard bottom;	Wiper
	Outboard top;	Horn
	Outboard bottom;	CDL trip

Fuse no.	*Rating*	*Circuit*	*Supply*
C1	20A	Interior fan	Start drop out
C2	15A	Wiper motor	Start drop out
C3	7.5A	Audio key-in	Key in
C4	7.5A	A.C. compressor	Ignition
C5	15A	Aux. Driving lamps	Battery

LED Rear Lamps

Introduced on all 6-speed Elise variants for '06 M.Y. are new rear lamp clusters incorporating LEDs in the annular segments of the lamps. The central elements continue to use filament bulbs. The non-USA Elise also adopts the USA centre high mounted stop lamp (CHMSL) featuring red LEDs behind a white lens. The light emitting diodes are extremely durable and are serviced only by lamp cluster replacement. The turn indicators in the centre of the outboard lamps, and the reverse lamps in the centre of the inboard units, use W16W bayonet fitting filament bulbs in twist release holders. Note that on USA cars, the outboard lamps are fitted with ballast modules secured by the lamp fixing nuts.

Lamp Configuration - filament bulb & LED types (LH lamps shown)

Non-USA

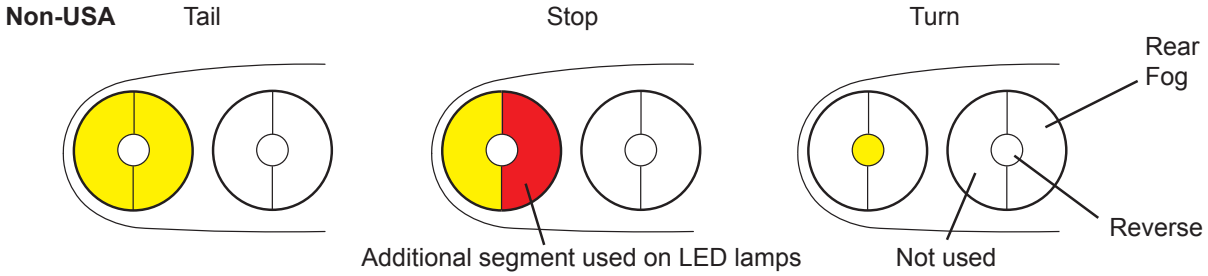

USA

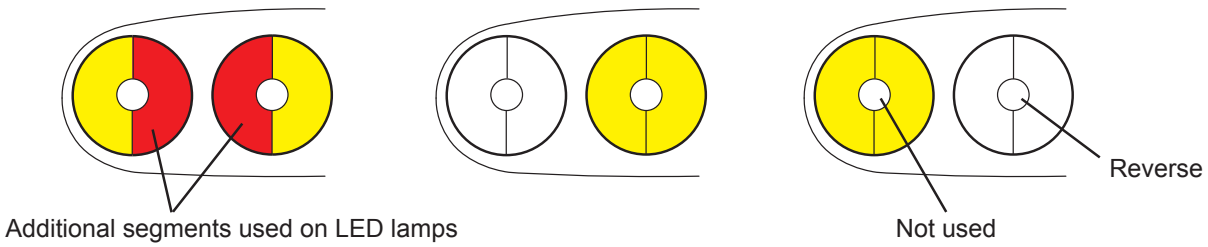

Downloaded from www.Manualslib.com manuals search engine

MP.12 - 2008 M.Y. SUPPLEMENT

VEHICLE SECURITY ALARM

The Lotus Elise/Exige for '08 model year onwards is fitted as standard with a PFK 457 immobiliser/alarm which includes the following features:

- Lotus branded transmitter key.
- U.K. approval to Thatcham category 1.
- 'Dynamic coding' of the transmitter keys; Each time the transmitters are used, the encrypted rolling code is changed to guard against unauthorised code capture.
- Passive activation of immobiliser, central locking and alarm system.
- Ingress protection using sensing switches on the latches of both doors, the front body access panels, and the engine lid/tailgate.
- Selectable cockpit intrusion sensing using a microwave sensor.
- Self powered siren to maintain protection if the vehicle battery is disconnected.
- Personal protection by 'on demand' activation of the siren.
- Emergency alarm override and transmitter key programming using an alarm/owner specific Personal Identification Number (PIN).

Transmitter Keys

Two new Lotus designed and badged transmitter keys are provided with the car, and combine a mechanical key blade with a three button transmitter unit incorporated into the key head. The mechanical key operates the ignition switch, emergency manual door locks, fuel filler cap (not USA) and Elise engine/boot lid. The transmitter operates the electronic immobiliser, alarm system and the central locking. The two transmitter keys should be kept separate, and a replacement obtained immediately after any loss to ensure that a spare is always available.

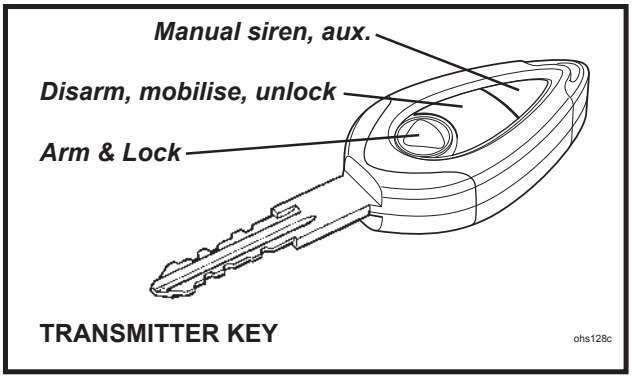

TRANSMITTER KEY

The 4-digit code for the mechanical key, the unique serial number of the immobiliser/alarm, and the vehicle owner's 5-digit alarm Personal Identification Number (PIN), are supplied on plastic tags attached to the key ring of a new vehicle. In order to allow replacement transmitter keys to be programmed, it is essential that these numbers are recorded and kept safely by the owner with the vehicle documents. It is also recommended that the dealer stress this issue to their customers and, in the interests of customer service, keep a record in their own database.

Replacement Keys: Additional or replacement transmitter keys may be purchased uncut/uncoded from Lotus under part number A120H0008S and will be supplied with a blank mechanical blade for copy cutting to an existing key. Alternatively, a cut key may be ordered from Bolton Lock Company, quoting the 4 digit 'L' key code, under part number A120H0009S (using form LSL482c). In either case, the transmitter will then need matching to the vehicle using the vehicle owner's 5-digit PIN, as described later in this bulletin.

Disarming the Alarm/Unlocking

When approaching the car, it is likely that the vehicle is locked and the alarm armed. The alarm red tell tale lamp in the speedometer face will be triple flashing. To disarm the alarm and unlock the doors:

- Press the central, unlock, button on the transmitter key. The first press will unlock just the driver's door. Two presses in quick succession will unlock both the driver and passenger doors.
- This command will be acknowledged by a double flash of the hazard lamps.
- The engine will be mobilised (see below).
- The interior lamp will fade on, and remain lit for up to 2 minutes (if set to the 'courtesy' position).
- The alarm tell tale will be extinguished.

If a door is not opened within 2 minutes, the doors will passively re-lock and the alarm system re-arm.

Downloaded from www.Manualslib.com manuals search engine

Passive Immobilisation

In order to provide a measure of automatic vehicle security, independent of any driver initiative, the system will 'passively' immobilise the engine's cranking and fuel pump circuits after the ignition has been turned off for 40 seconds, or a similar period has elapsed since the last mobilising command. With the ignition off, the alarm tell tale will indicate that immobilisation is in effect by briefly flashing every second. With ignition on, immobilisation is indicated by a continuously lit tell tale.

To mobilise the car (i.e. allow engine starting) with ignition on or off, press once the transmitter centre button; the alarm tell tale will be extinguished.

Arming the Alarm/Locking the Doors

To lock the doors and arm the alarm, remove the ignition key, close both doors, and check that the engine lid/tailgate and body front access panels are secure:

- Press once the raised logo button on the transmitter fob.
- This command will be acknowledged by a single flash of the hazard lamps.
- Both doors will be locked, the engine immobilised and the alarm system armed. A settling period of 40 seconds must expire before the ingress sensors become active.
- The alarm tell tale will repeatedly triple flash.

Note:

i) If the system is armed when a door is not fully shut, three **triple** beeps will sound as a warning and the doors will not be locked. Opening a door will *not* trigger the alarm.

ii) If the system is armed when the engine lid/tailgate or a front access panel is not fully closed, three warning **double** beeps will be heard, and the doors will not be locked. Opening a door in this instance *will* trigger the alarm.

iii) If one transmitter is used to disarm the alarm, and a second transmitter to re-arm, a system test mode will be initiated, and operational variations will occur. Allow an undisturbed period of 2 minutes to elapse to restore normal operation.

When fully armed, and after the settling period of 40 seconds has expired, the alarm will be triggered by any of the following actions:

- Interruption of the car battery power supply or siren cables.
- Energising the ignition circuit ('hot wiring').
- Opening a door;
- Opening the engine lid/tailgate or a front access panel.
- Movement detected within the cabin (unless de-selected).

If the alarm is triggered, the hazard warning lamps will flash and the wailing siren sound for a period of approximately 30 seconds before closing down and resetting, ready for any further triggering input. If a trigger is continuously present (e.g. door left open), the alarm will repeat for a maximum of eight 30 second cycles before excluding the triggering sensor for the remainder of the armed period.

To silence the siren, press once the central, disarm button on the transmitter key. If necessary, press a second time to disarm the alarm.

Alarm Tell Tale Summary

Tell tale off;	Alarm disarmed, engine mobilised.
Tell tale on;	Immobilised with ignition on.
Brief flash every second;	Immobilised with ignition off.
Repeating triple flash;	Alarm armed.

Interior Movement Sensor

A microwave sensor is mounted behind the cabin rear bulkhead trim panel, and is able to detect substantial physical movement within the cockpit, and trigger the alarm. Microwave transmissions are blocked by metal objects, so it is important not to shield the signal by placing such items on the bulkhead ledge.

If an animal is to be left in the vehicle, or if for any other reason it is desired to exclude the interior movement sensor when the alarm is set, press once the transmitter logo button in the normal way to set the alarm, and then press a second time (within 2 seconds) to exclude the interior movement sensor. A single beep will be heard as confirmation. This exclusion will be automatically cancelled when the alarm is disarmed.

Downloaded from www.Manualslib.com manuals search engine

The sensitivity of the sensor is factory set for the Elise/Exige, and should never need any adjustment. Such a faciltity is, however, provided on the unit, and is accessible after removal of the cabin rear bulkhead trim panel. Turning the adjustment screw clockwise will increase sensitivity.

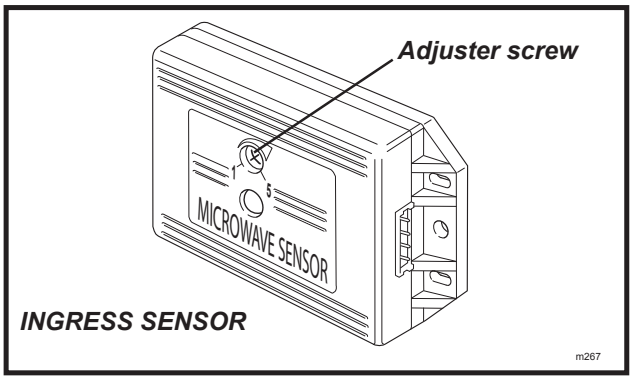

Manual Activation of Siren

If, for personal security reasons, it is desired to manually activate the siren at any time when the ignition is off, press for 3 seconds the transmitter auxiliary (3rd) button. The wailing siren will sound, and the hazard lamps flash for a period of 30 seconds. To stop the siren, press once any of the transmitter buttons.

Manual siren activation will not affect the status of the alarm arming.

Transmitter Key Battery Replacement

The transmitter keys will normally operate within a range of 5 metres from the car, but this may be reduced by the presence of other radio signals in the vicinity. The transmitters are powered by a long life 3V Lithium battery, type CR2032, which with normal use should last for 3 years. To ensure continuity of operation, it is recommended to renew the batteries every 12 months:

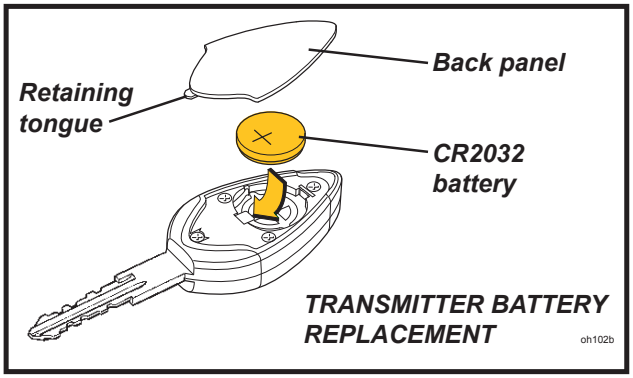

- Using a small screwdriver, prise open the back panel of the key case using the slot by the keyring hole.
- Remove the old battery and wait for 10 seconds before inserting the new battery with +ve sign uppermost, and holding the battery only by the periphery.
- Refit the back panel, engaging the retaining tongue, and pressing firmly to engage the clip.
- The transmitter should now operate normally.

Disconnecting the Vehicle Battery

In order to prevent the alarm being triggered, before disconnecting the vehicle battery, ensure that the alarm is disarmed.

Emergency Disarming/Mobilising

If the key head transmitters are lost or damaged, the alarm system owner's 5-digit PIN may be used to disarm the alarm and start the engine **provided that** the cabin is accessible, and a correct mechanical key blade is available. Note that if the alarm is armed, accessing the cabin, or turning on the ignition will trigger the alarm until completion of this emergency process.

- Turn on the ignition. The alarm tell tale will light.
- Within 10 seconds, turn the ignition off; the tell tale will begin to flash.
- After a number of flashes corresponding to the first digit of the PIN, turn on the ignition. Note that the first flash may not be of full duration (but is still to be counted) dependent on the waveform position at time of ignition switch off.
- Turn off the ignition and after a number of flashes corresponding to the second digit of the PIN, turn on the ignition. Repeat this process until all 5 digits have been completed. Note that 10 flashes correspond to a zero digit.
- If the PIN is entered correctly, the alarm will now be overridden and the engine mobilised. However, passive immobilisation will still occur after an ignition off time of 40 seconds, requiring a repeat of the above procedure to mobilise. Passive arming and passive door locking cannot occur until a transmitter is used to operate the alarm.

Downloaded from www.Manualslib.com manuals search engine

If, at any stage of the process, a number is entered incorrectly, the system will immediately revert to the start, so that the whole PIN must be re-entered.

Programming Additional Transmitters

A maximum of 6 transmitters may be programmed to the car, any thereafter overwriting the first to have been programmed.

- With the engine immobilised (tell tale flashes briefly once per second), turn on the ignition.
- Enter the PIN as detailed above, followed by the additional two digits 1, 1.
- The tell tale will flash rapidly for one second, then turn off.
- Within 8 seconds, press any button on the transmitter to be programmed. The tell tale will then pulse rapidly and the siren will beep.
- Within 10 seconds press any button on the next transmitter to be programmed (if applicable), and repeat this process for all remaining transmitters.
- When all transmitters have been programmed, wait for 10 seconds, or turn off the ignition.

To disable a lost or stolen transmitter from the system, use the above procedure to programme 6 transmitters, if necessary repeatedly reprogramming the same transmitter if less than 6 programmed transmitters are to be used.

Trigger Report Back and Feature Selection

A facility is provided to identify the source of an alarm triggering event (trigger report back), as well as allowing certain features of the system to be selected or de-selected. The same procedure described above to input a PIN is used, but in this case to input the programming code '123'; the tell tale will then flash rapidly for 1 second, then remain lit. Commencing within 10 seconds, continue this procedure to input the two digits of the feature code, after which the tell tale will flash rapidly for 1 second then beep once or twice to indicate the new status of that feature; one for 'ON', twice for 'OFF'. Selection will alternate each time that feature code is entered. Note that within 10 seconds, a second feature code (or repeat) may be selected from this point by entering only the 2-digit code. To exit programme mode, simply wait for 10 seconds.

Feature	*Code*	*Default*	*1 Beep*	*2 Beeps*
Revert to defaults	123 00			
Trigger report back	123 11	see below		
Unlock with ignition	123 33	OFF	ON	OFF
Lock with ignition	123 34	OFF	ON	OFF
Selective door unlock	123 41	ON	ON	OFF
Audible tones*	123 61	OFF	ON	OFF
Lock with auto re-arm	123 87	ON	ON	OFF
Door open audible warning	123 88	ON	ON	OFF

* When selected, a single beep will sound when the alarm is armed, and a double beep when disarmed. To silence for a single activation, press briefly the transmitter auxiliary (3rd) button prior to pressing the arm or disarm button.

Trigger report back: After the code 12311 has been entered, the tell tale flashes out a code(s) to indicate the source of the alarm trigger:

No. of flashes	*Triggering sensor*
1	Microwave movement sensor
2	Door, bonnet or boot lid
3	Ignition energisation
4	Manual siren activation

Quick Test

To facilitate testing of the alarm system, the unit can be placed into a 'Quick Test' mode by arming the alarm with one transmitter key, and disarming with another. In this mode, the system will shorten the siren time to 2 seconds, the immobiliser arm time to 5 seconds, and the settling time to zero. To exit this mode, simply wait for 2 minutes without any further inputs.

Note that in Quick Test mode, any movement detected by the microwave sensor will trigger only the tell tale and not the siren. The 2 minute timer will not be extended.

Downloaded from www.Manualslib.com manuals search engine

Component Location

The location of the PFK alarm components is unchanged from the equivalent earlier Cobra parts; the controller is mounted on top of the scuttle beam at the LH extreme end. Access requires removal of the fascia top. The immobiliser is incorporated into the controller as a single unit. The siren is mounted on the front of the radiator duct LH extension, beneath the LHF turn lamp. Accessible only after removal of the front clamshell. The microwave sensor is fixed to the cabin rear bulkhead, requiring removal of the rear bulkhead trim panel for access.

CDL Module; The Central Door Locking module is different on PFK cars, but is mounted in the same position as previously, on top of the scuttle beam at the RH extreme end. Note that this unit is specific to PFK cars, and does not require the inverter relay (on underside of scuttle beam) for inertia switch operation of the CDL.

TYRE PRESSURE MONITORING SYSTEM (TPMS) - USA ONLY

All USA Elise/Exige models from '08 model year onwards are fitted with a tyre pressure monitoring system. A sensor incorporated into each of the tyre valves monitors the air pressure inside the tyre, and supplies an onboard control module with this data by radio transmission. If any tyre pressure should fall below 75% of the recommended value, an alert message is sent to the instrument panel, and the tyre pressure tell tale will light up amber. The fuel gauge display will then be overwritten with a message to indicate which tyre is concerned, with text such as: **LF Low** (left hand front tyre low pressure). This message will show for 5 seconds before the display reverts to the fuel level bar graph, but will repeat for 5 seconds at 30 second intervals.

The TPMS incorporates self-malfunction recognition, and if a fault is detected, the tell tale will flash for one minute and then remain constantly lit. The LCD panel will also flash 'TPMS FAULT' for 5 seconds, and repeat at 30 second intervals; no indication of low tyre pressure will be displayed.

Tyre fitters and service technicians should be made aware that TPMS is fitted, and that the tyre valves include pressure sensors. If the emergency tyre inflator aerosol has been used, it will be necessary to renew the tyre valve/pressure sensor. If a fault is indicated after wheel or tyre replacement, it is likely that a sensor has been incorrectly fitted or damaged. If a tyre valve is renewed, or is moved to a different wheel position, the TPMS will automatically identify the new configuration.

Note that the pressure sensors are powered by integral batteries, with an average service life of 10 years. It is recommended to renew all pressure sensors at this time interval.

WARNING 'TELL TALE' LAMPS

The instrument panel tell tales and LCD functionality have been revised for '08 M.Y. New features are described below:

Security Tell Tale

The security function is separated from the combined security/rpm tell tale and is moved into the face of the speedometer.

High RPM Tell Tales

Three red tell tales are incorporated into the tachometer face to warn that maximum engine speed is being approached. Maximum transient engine speed in all gears at normal running temperature, is 8,500 rpm (7150 rpm for Elise S), at which point the engine is governed, but as the rate of rpm increase is potentially greater in the lower gears, the tell tale trigger points are tailored to accommodate the reaction time available. As maximum rpm is approached, the tell tales will light in the following left to right sequence:

- one red light
- two red lights
- three rapidly flashing lights

When exploiting maximum acceleration, gearchange upshifts should be made immediately the three flashing lights appear.

NOTICE:

- A 6,000 rpm limit is imposed on a cold engine to reduce possible damage and wear from an unsympathetic driving style.
- At normal running temperature, maximum continuous engine speed is 8,000 rpm (6,800 rpm Elise S).
- Using maximum rpm and the above tell tale facility should be restricted to occasions when maximum acceleration is required. Overuse will compromise powertrain service life.

Downloaded from www.Manualslib.com manuals search engine

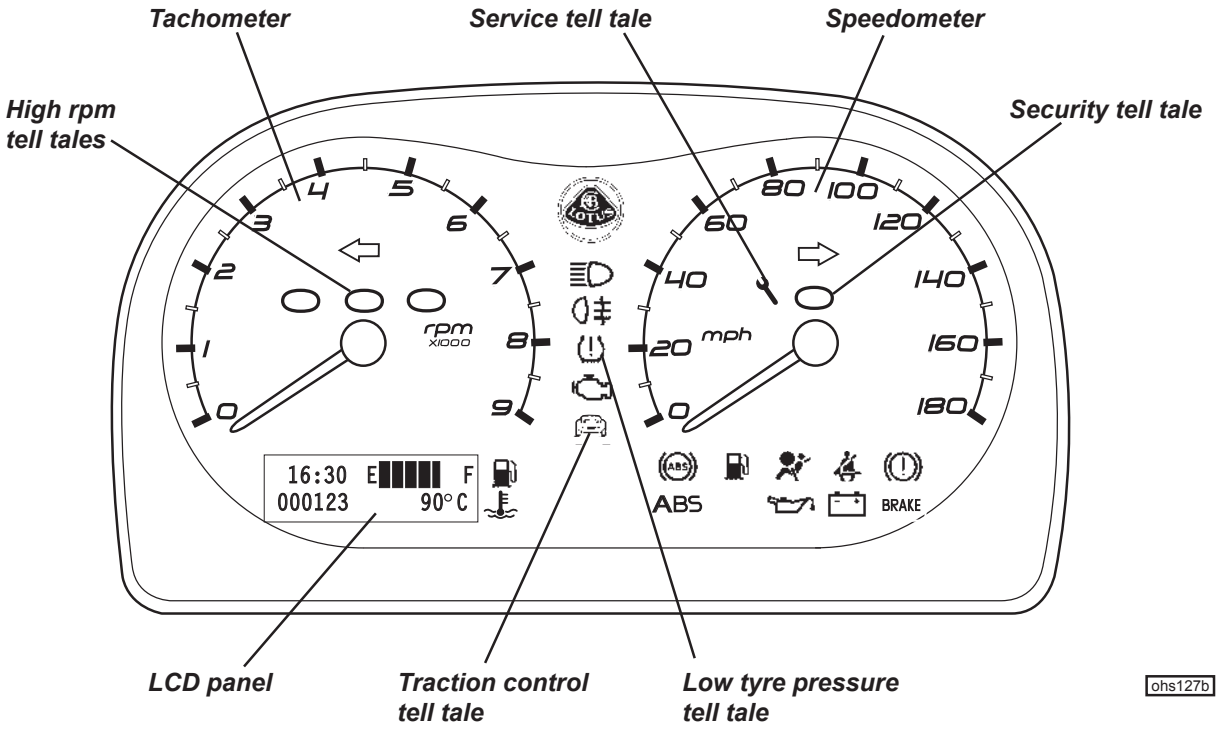

- The engine is not protected from overspeeding caused by erroneous or premature downchanging. Such misuse could result in catastrophic failure, not covered by the vehicle warranty.

SCHEDULED SERVICE TELL TALE (IF FITTED)

Under normal usage conditions, a routine maintenance service should be performed at the first occurring of 9,000 miles (15,000 km) or 12 months from the previous service (USA; 7,500 miles/6 months). The approved service period extends to 500 miles before/after or one month before/after the stipulated distance/time.

As a driver aid to distance servicing, an amber wrench icon in the face of the speedometer will flash for 10 seconds following each ignition turn on, when within 500 miles (800 km) of the service period, allowing plenty of time for booking arrangements to be made. Once the service period is reached, the tell tale will remain constantly lit with ignition until reset by your dealer.

Note that this feature is provided only as a secondary aid, and uses only ***distance*** criteria, and not the ***time*** factors which may predominate. It is the owner's responsibility to ensure that servicing is carried out at the prescribed intervals..

TRIP DISTANCE/DIGITAL SPEED DISPLAY/TIME CLOCK

The top left portion of the LCD panel may be cycled through the following displays:

- Trip distance (in same units as analogue speedometer).
- Digital road speed in alternative units to those indicated by the analogue instrument (either mph or km/h).
- Digital time clock (if fitted - this feature will not be available initially).

To cycle, one at a time, through these three displays, briefly press the small button on the right hand side of the steering column shroud. (Note that this button also adjusts the brightness of the instrument and HVAC panel illumination if held pressed when road speed is selected).

Trip distance: Units displayed are miles, and range from 000.0 to 999.9. To reset to zero; when the trip function is displayed, press the button on the column shroud for longer than 1 second.

Time Clock Setting: To adjust the 24 hour time clock (if fitted);

- when the time function is displayed, press the button on the column shroud for longer than 1 second. The hour display will then flash.
- Repeated brief presses of the button will increment the hour figure. Pressing the button for longer then 1

Downloaded from www.Manualslib.com manuals search engine

second will store the hour setting and start the minute display flashing.
- Further brief button presses will increment the minute figure.
- When the correct time is displayed, press the button for longer than 1 second to store the setting and start the clock.

VARIABLE TRACTION & LAUNCH CONTROL (IF FITTED)

Exige S models specified with the 'Performance Pack' option, include variable Lotus Traction Control (LTC), allied with Variable Launch Control (see below) and have a rotary control knob mounted on the left hand side of the steering column shroud.

Each time the ignition is turned on, normal full LTC is activated. To enable variable traction control, turn on the ignition and hold the LTC 'off' button pressed for 2 seconds. Check that the tell tale in the switch button is lit. Start the engine. Note that if the ignition is switched off (e.g. prior to a second start attempt), the above procedure must be repeated in sequence.

With the switch button tell tale lit and the engine running, the rotary knob may then be used to select the degree of traction control desired, with the setting shown on the instrument panel LCD in the form '#% SLIP', with a possible range between 0 and 9%. The display will revert to showing the fuel level after a few seconds.

- For maximum traction control (0% slip) turn the knob fully counterclockwise to 'MAX'.
- To reduce traction control (to allow up to 9% slip), turn the knob progressively clockwise.
- Fully clockwise ('0'), traction control is disabled, as indicated by the lighting of the instrument panel tell tale, and an LCD message of 'LTC OFF'.

If at any time during that ignition cycle, the control knob is turned, the LCD will again show the traction control setting for a few seconds.

When the ignition is next turned on, normal full LTC will be activated unless the above procedure is repeated.

Variable Launch Control

CAUTION: This feature is designed for competition use, and as such, its employment will invalidate vehicle warranty on any components subject to the extreme loads associated with racing starts.

Variable Launch Control allows the engine rpm to be limited during a competition start in order to balance engine power against available grip and provide a controlled degree of wheelspin for the first moment of acceleration, until superseded by the traction control system at around 6 mph.

To enable this feature, turn on the ignition and hold the LTC 'off' button pressed for 2 seconds. Check that the tell tale in the switch button is lit. Then;

- With ignition on, engine **stopped**, fully depress the throttle pedal for 5 seconds.
- Tacho will now show launch rpm. Turn the rotary knob as necessary to select any desired launch rpm between 2000 and 8000.
- Release throttle and start engine.
- Turn the rotary knob to select the desired level of traction control (see above), noting that the launch control setting will not be affected.
- Engage first gear, apply full throttle (ECU limits engine speed to selected launch rpm), and rapidly 'drop' clutch.
- Maintain full throttle throughout the transition from launch to traction control (at around 6 mph) until the first gear change is required.
- To disable launch control when variable traction control is still required, reset launch rpm to 8,000.

NOTE

- Do not attempt to slip the clutch during this process, as overheating or damage to the clutch mechanism may occur. An instant clutch engagement is required to 'break' rear tyre traction and initiate wheelspin. Note that an hydraulic damper valve is incorporated into the clutch release pipework to protect the driveline from excessive shock loading when using this technique.
- Do not attempt LC starts in any gear other than first.
- Do not hold the engine at or near maximum rpm for more than a few seconds.
- Under no circumstances should this track feature be employed on the public road.

Downloaded from www.Manualslib.com manuals search engine

- **Use of Launch Control is an ultimate technique designed to produce the fastest possible race start. Always allow the clutch to cool and recover before repeating a launch controlled start. The extreme loads associated with such starts will result in reduced transmission component life cycles.**
- At the next key-on, the system will default to full LTC and Launch Control off. Turning on the ignition and holding the LTC 'off' button pressed for 2 seconds will restore the previous traction and launch settings.

Adjustment Tips

Note that the optimum settings for variable traction and launch control will differ for each set of track surface, tyre and ambient conditions. A suggested adjustment logic follows:

- Set the traction control to a mid position.
- Start with a low launch rpm e.g. 4,000 rpm.
- Trial launch and assess initial wheelspin control and transition into traction control.
- If launch control is set too low, the engine may ‘bog down’ and fall out of the power band. If set too high, too much initial wheelspin may result, with poor step off from the line.
- Similar logic applies to traction control adjustment when this system takes over above about 6 mph.

REAR LAMP CLUSTERS

A running change to the LED tail lamp clusters will occur shortly after '08 introduction. The new 'B' level lamps incorporate features allowing the previously separate radio supression inductor jump harnesses and (for USA cars) the ballast resistors to be deleted. The new lamps are identified by using a grey moulding for the lamp rear body instead of the previous black colour. If replacing black body lamps on any car with 'B' level grey body lamps, the inductor jump harnesses and ballast resistors (as applicable) may be discarded.

CAN BUS DIAGNOSTICS

Controller Area Network (CAN) is an electronic standard to allow high speed communication between modules and controllers, via a serial data bus. The bus is a circuit linking the modules to the controller, consisting of a pair of cables, twisted together to reduce electromagnetic interference, and carrying a square wave voltage signal corresponding to '0's and '1's, coded in such a way as to identify and prioritise the individual systems. On the Elise/Exige range, CAN based systems include; engine management system, instrument pack and tyre pressure monitoring system (USA).

All USA market cars from '08 model year are required by legislation to use a CAN compliant on-board diagnostic system. This has been commonised for all Elise/Exige models. The Lotus Scan 3 tool is replaced by a 'stand alone' lap top PC loaded with 'Lotus Techcentre' software to allow the CAN based serial data to be read. An '08 model year update kit T000T1494F will shortly be issued mandatorily to all dealers. The Vehicle Communication Device (T000T1476F) introduced for the Europa model is used to connect the vehicle to the laptop Lotus Techcentre. Engine programming, live data display, diagnostics of engine, ABS and airbag systems, and service tell tale lamp resetting are all carried out via the Lotus Techcentre.

The minimum specification of the laptop for installation of the Lotus Techcentre is as follows:

Processer 1.70 Ghz
1 GB RAM
40 GB HDD
CDRW DVD ROM
WIN XP PRO
USB interface
Ethernet or Wireless LAN

Note that this laptop should be dedicated totally to the Lotus Techcentre, with no other software loaded.

CIRCUIT DIAGRAMS

Circuit diagrams for '08 model year cars will shortly be issued.

Downloaded from www.Manualslib.com manuals search engine

MP.13a - CIRCUIT DIAGRAMS - non USA, prior '06 M.Y.

Circuit	*Sheet*
Start, Alternator, Ignition	1
Fuel Pump, Engine Management 1	2
Engine Management 2, Diagnostic Connector	3
Engine Management 3	3A
Alarm, Interior Lamp	4
Stoplamps, Reverse Lamps	5
Direction Indicators, Hazard Lamps	6
Headlamps, Sidelamps, Fog Lamps, Switch Controller	7
Instrument Pack	8
Windscreen Wipers/Washers	9
Interior Fan, Air Conditioning (Option)	10
Radio, Auxiliary Power Socket	11
Horn	12
CDL, Window Lift, Tracker	13
ABS	14
Ground Splices	15
Fuses	16

Downloaded from www.Manualslib.com manuals search engine

MP.13b - CIRCUIT DIAGRAMS - USA prior '06 M.Y.

Circuit	*Sheet*
Start, Alternator, Ignition	1
Fuel Pump, Engine Management 1	2
Engine Management 2, Diagnostic Connector	3
Engine Management 3	3A
Alarm, Interior Lamp	4
Stoplamps, Reverse Lamps	5
Direction Indicators, Hazard Lamps	6
Headlamps, Sidelamps, Switch Controller	7
Instrument Pack	8
Windscreen Wipers/Washers	9
Interior Fan, Radiator Fans, Air Conditioning (Option)	10
Radio, Auxiliary Power Socket	11
Horn, Airbags, Seat Belt Pre-tensioners	12
CDL, Window Lift, Tracker	13
ABS	14
Ground Splices	15
Fuses	16

Downloaded from www.Manualslib.com manuals search engine

MP.13c - CIRCUIT DIAGRAMS - '06 M.Y. onwards

Circuit	*Sheet*
Colour Code & Abbreviations	Page 32
Start, Alternator, Ignition	1
Fuel Pump, Engine Management 1	2
Engine Management 2, Diagnostic Connector	3
Engine Management 3	3A
Alarm, Interior Lamp	4
Stoplamps, Reverse Lamps	5
Direction Indicators, Hazard Lamps	6
Headlamps, Sidelamps, Rear Foglamps, Switch Controller	7
Instrument Pack	8
Windscreen Wipers/Washers	9
Interior Fan, Radiator Fans, Air Conditioning (Option)	10
Radio, Auxiliary Power Socket	11
Horn, Airbags, Seat Belt Pre-tensioners	12
CDL, Window Lift, Tracker	13
ABS & Traction Control	14
Ground Splices	15
Fuses	16

Downloaded from www.Manualslib.com manuals search engine

Colour Code

B = Black
G = Green
K = Pink
LG = Light Green
N = Brown
O = Orange
P = Purple
R = Red
S = Slate
U = Blue
W = White
Y = Yellow

Abbreviations

ABS	Anti-lock Brake System
ACCM	Air Conditioning Control Module
ACHC	Air Conditioning Harness Connector
ACIS	Acoustic Control Induction System
CDL	Central Door Locking
CHMSL	Centre High Mounted Stop Lamp
CVCV	Canister Vent Close Valve
DDHC	Driver's Door Harness Connector
DI	Direction Indicator
ECU	Electronic Control Unit
EHC	Engine Harness Connector
FL	Fog Lamp
FSM	Front Side Marker
FTC	Fuel Tank Connector
GND	Ground
IP	Instrument Pack
LF	Left Front
LIHC	Left Inner Harness Connector
LOHC	Left Outer Harness Connector
LR	Left Rear
MB	Main Beam
NPL	Number Plate Lamp
O2	Oxygen (sensor)
PDHC	Passenger's Door Harness Connector
RF	Right Front
RIHC	Right Inner Harness Connector
RIL	Rear Outer Lamp
RMC	Rear Module Connector
ROHC	Right Outer Harness Connector
ROL	Rear Outer Lamp
RR	Right Rear
RSM	Rear Side Marker
SL	Side Lamp
SPL	Splice
SPMC	Switch Pack Module Connector
SSWHC	Starter Switch Harness Connector
TMAF	Temperature & Mass Air Flow
VSV	Vacuum Solenoid Valve
VVT	Variable Valve Timing
VVTLi	Variable Valve Timing & Lift - intelligent
WSS	Wheel Speed Sensor
YMC	Yazaki Module Connector

Downloaded from www.Manualslib.com manuals search engine

MP.13d - CIRCUIT DIAGRAMS - '08 M.Y. onwards

Circuit	*Sheet*	*Page*
Colour Code & Abbreviations	-	42
Start, Alternator, Ignition	1	43
Fuel Pump, Engine Management 1	2	44
Engine Management 2, Diagnostic Connector	3	45
Engine Management 3	3A	46
Alarm, Interior Lamp	4	47
Stoplamps, Reverse Lamps, Tyre Pressure Monitoring	5	48
Direction Indicators, Hazard Lamps	6	49
Headlamps, Sidelamps, Rear Foglamps, Switch Controller	7	50
Instrument Pack	8	51
Windscreen Wipers/Washers	9	52
Interior Fan, Radiator Fans, Air Conditioning (Option)	10	53
Radio, Auxiliary Power Socket	11	54
Horn, Airbags, Seat Belt Pre-tensioners	12	55
CDL, Window Lift	13	56
ABS & Traction Control	14	57
Ground Splices	15	58
Fuses	16	59

Downloaded from www.Manualslib.com manuals search engine

Colour Code

B = Black
G = Green
K = Pink
LG = Light Green
N = Brown
O = Orange
P = Purple
R = Red
S = Slate
U = Blue
W = White
Y = Yellow

Abbreviations

ABS	Anti-lock Brake System
ACCM	Air Conditioning Control Module
ACHC	Air Conditioning Harness Connector
ACIS	Acoustic Control Induction System
CDL	Central Door Locking
CHMSL	Centre High Mounted Stop Lamp
CVCV	Canister Vent Close Valve
DDHC	Driver's Door Harness Connector
DI	Direction Indicator
ECU	Electronic Control Unit
EHC	Engine Harness Connector
FL	Fog Lamp
FSM	Front Side Marker
FTC	Fuel Tank Connector
GND	Ground
IP	Instrument Pack
LF	Left Front
LIHC	Left Inner Harness Connector
LOHC	Left Outer Harness Connector
LR	Left Rear
MB	Main Beam
NPL	Number Plate Lamp
O2	Oxygen (sensor)
PDHC	Passenger's Door Harness Connector
RF	Right Front
RIHC	Right Inner Harness Connector
RIL	Rear Outer Lamp
RMC	Rear Module Connector
ROHC	Right Outer Harness Connector
ROL	Rear Outer Lamp
RR	Right Rear
RSM	Rear Side Marker
SL	Side Lamp
SPL	Splice
SPMC	Switch Pack Module Connector
SSWHC	Starter Switch Harness Connector
TMAF	Temperature & Mass Air Flow
VSV	Vacuum Solenoid Valve
VVT	Variable Valve Timing
VVTLi	Variable Valve Timing & Lift - intelligent
WSS	Wheel Speed Sensor
YMC	Yazaki Module Connector

Downloaded from www.Manualslib.com manuals search engine

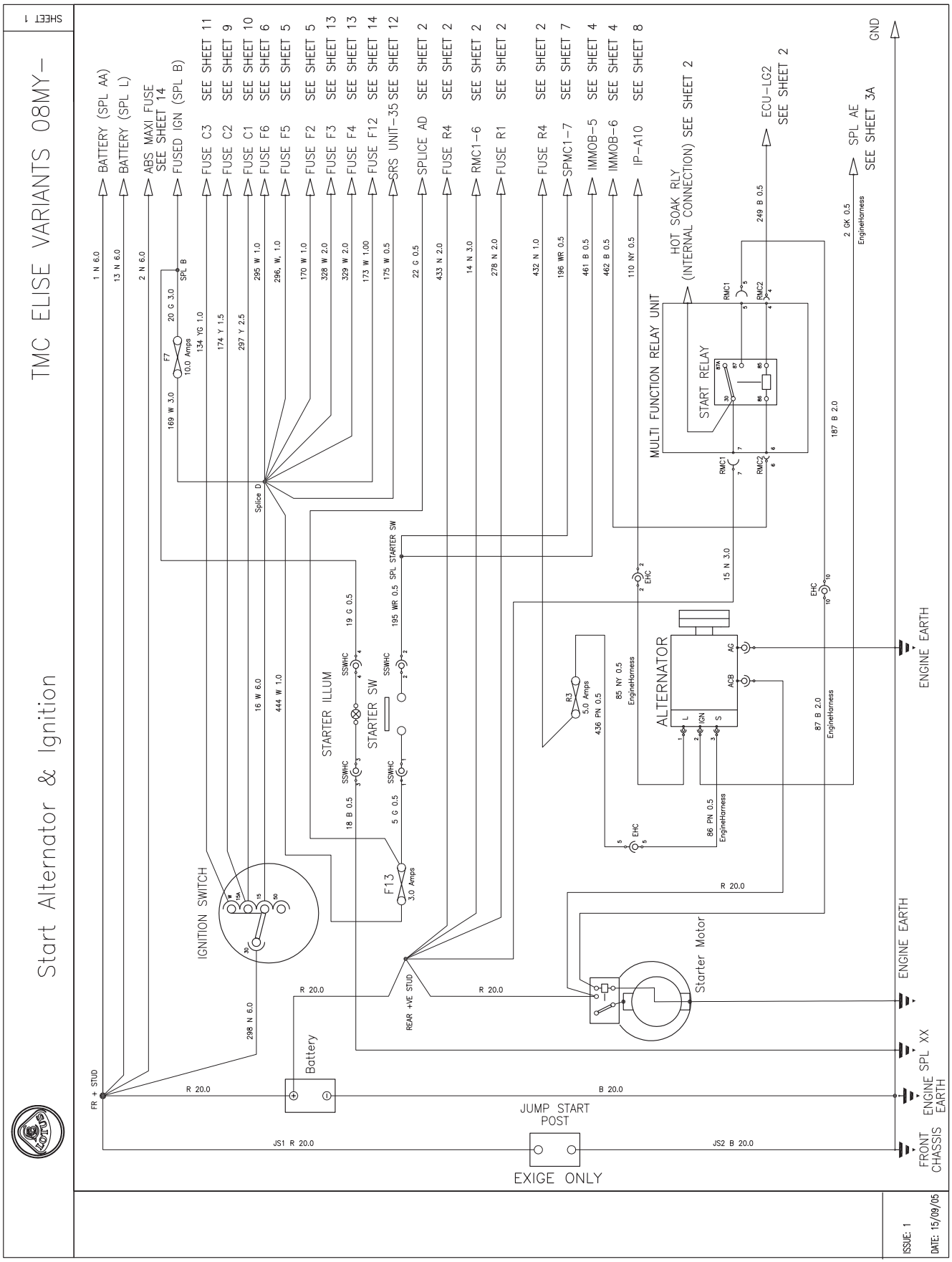

Downloaded from www.Manualslib.com manuals search engine

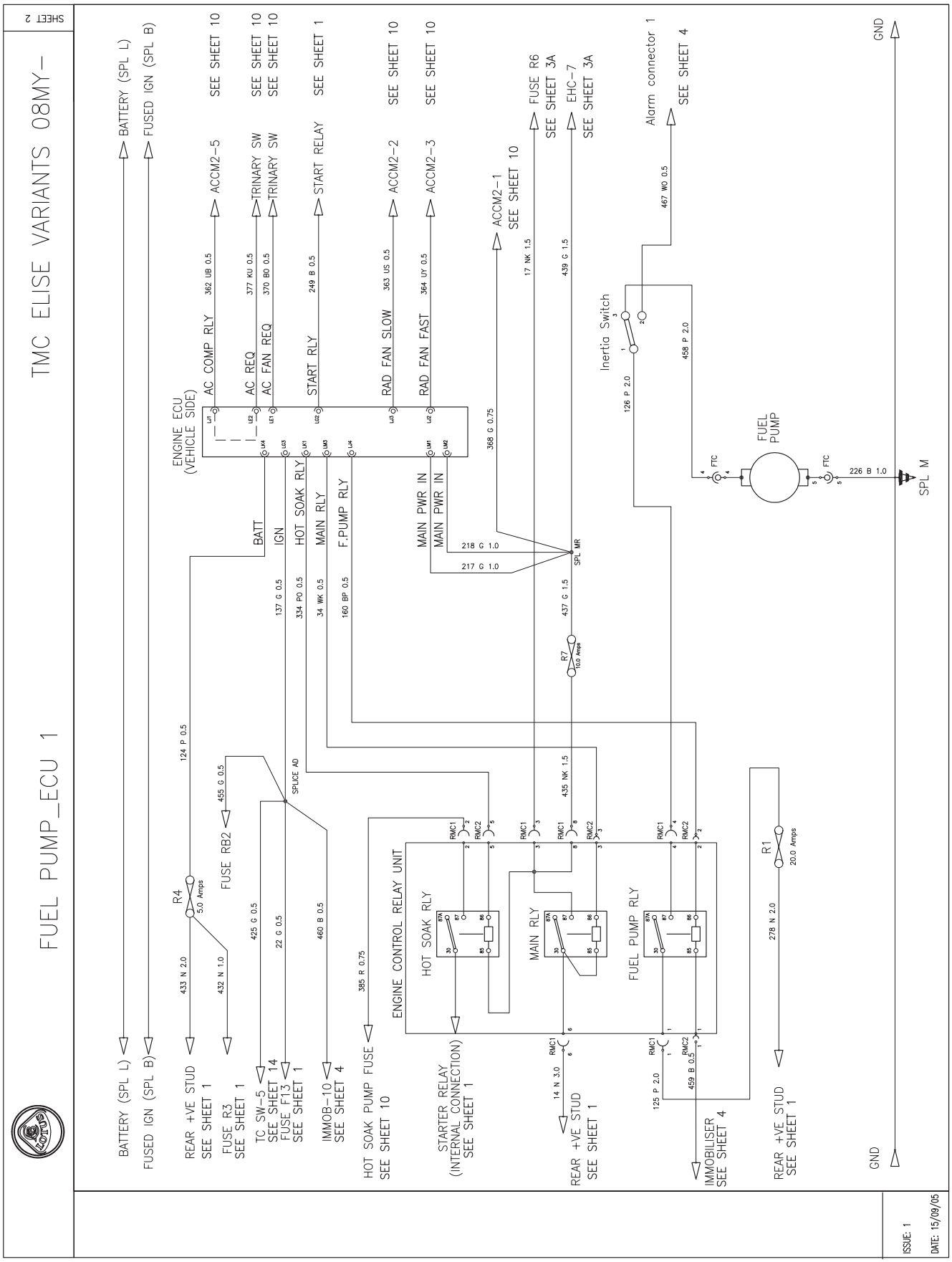

Downloaded from www.Manualslib.com manuals search engine

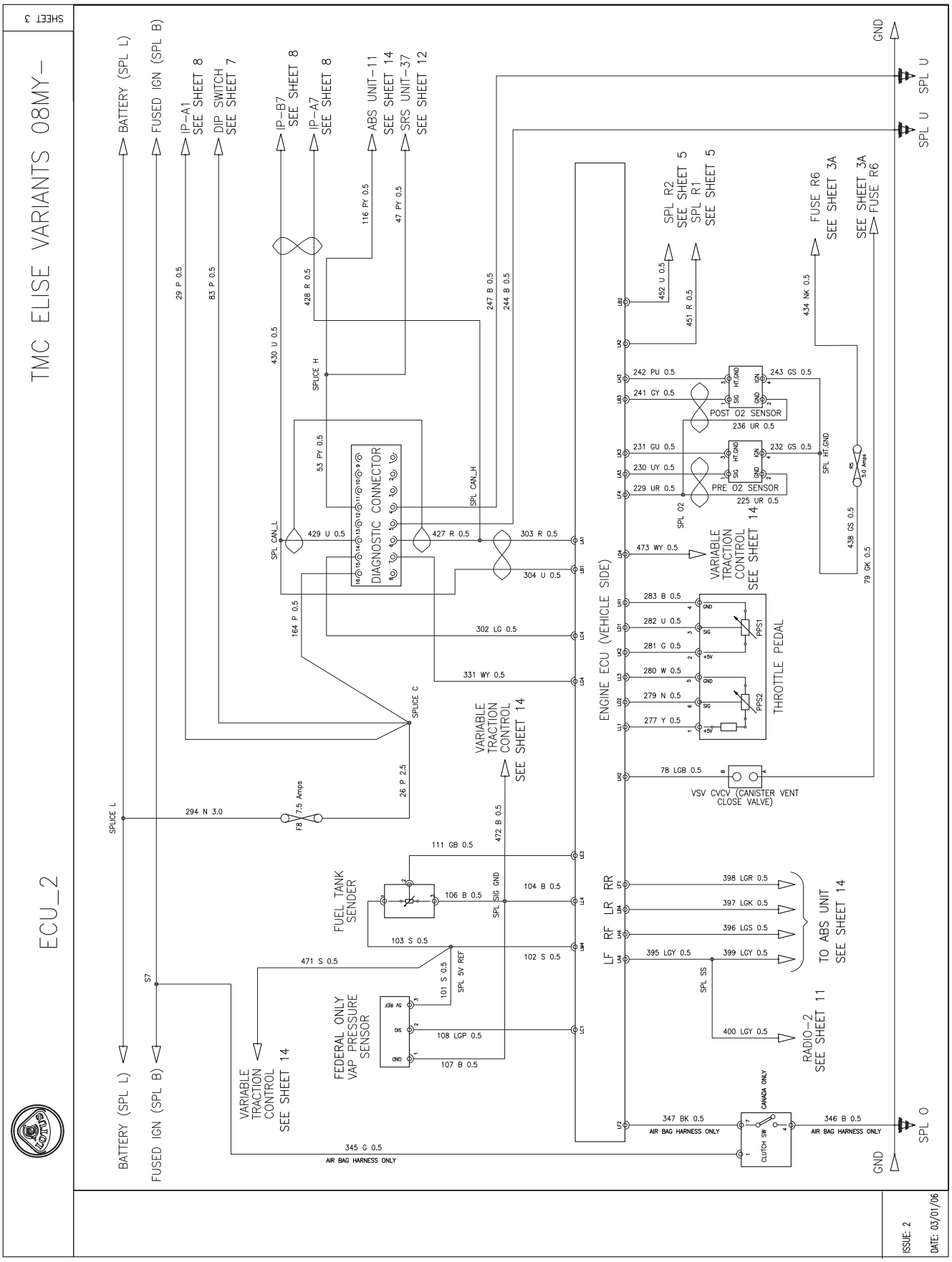

Downloaded from www.Manualslib.com manuals search engine

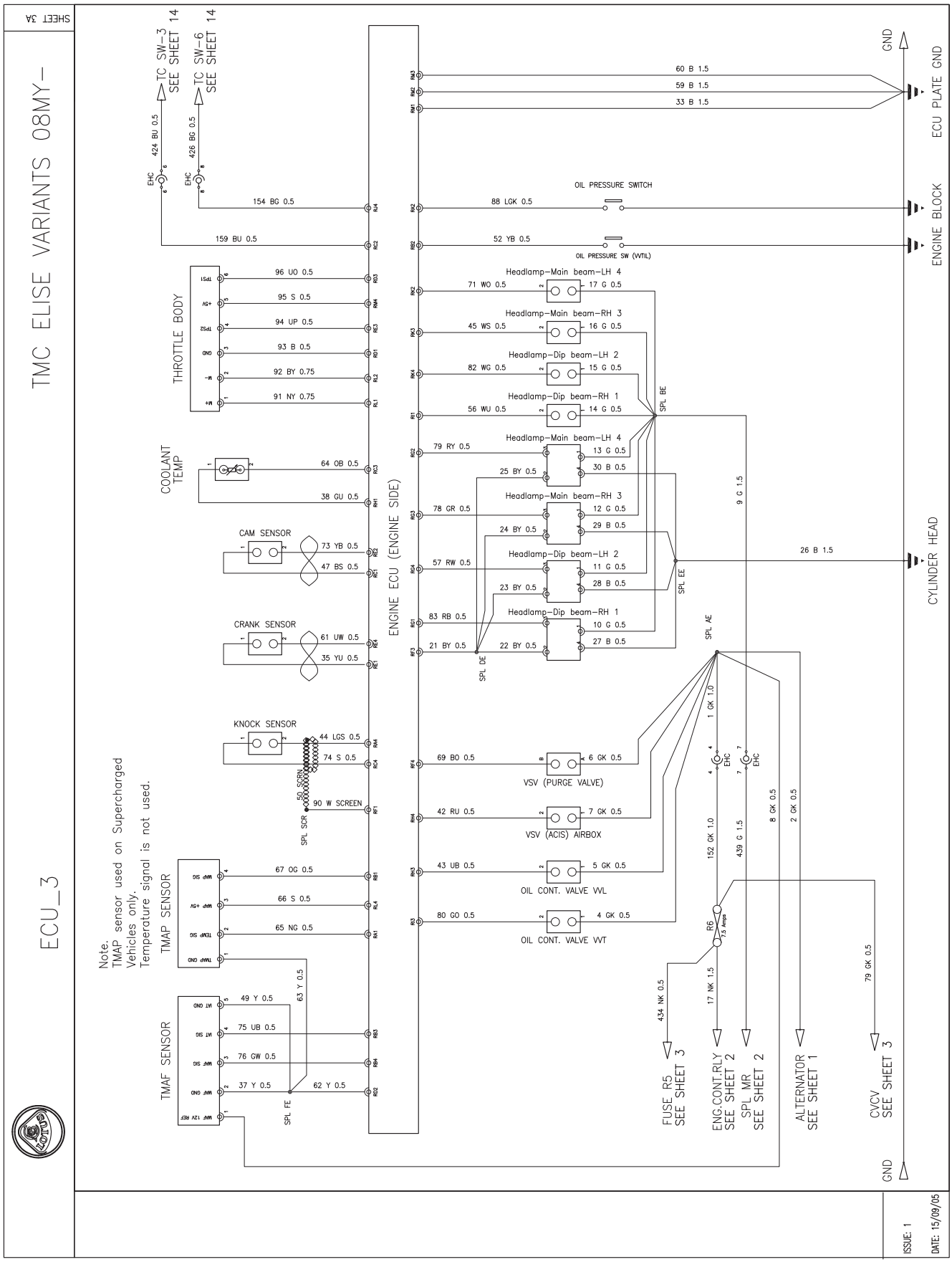

Downloaded from www.Manualslib.com manuals search engine

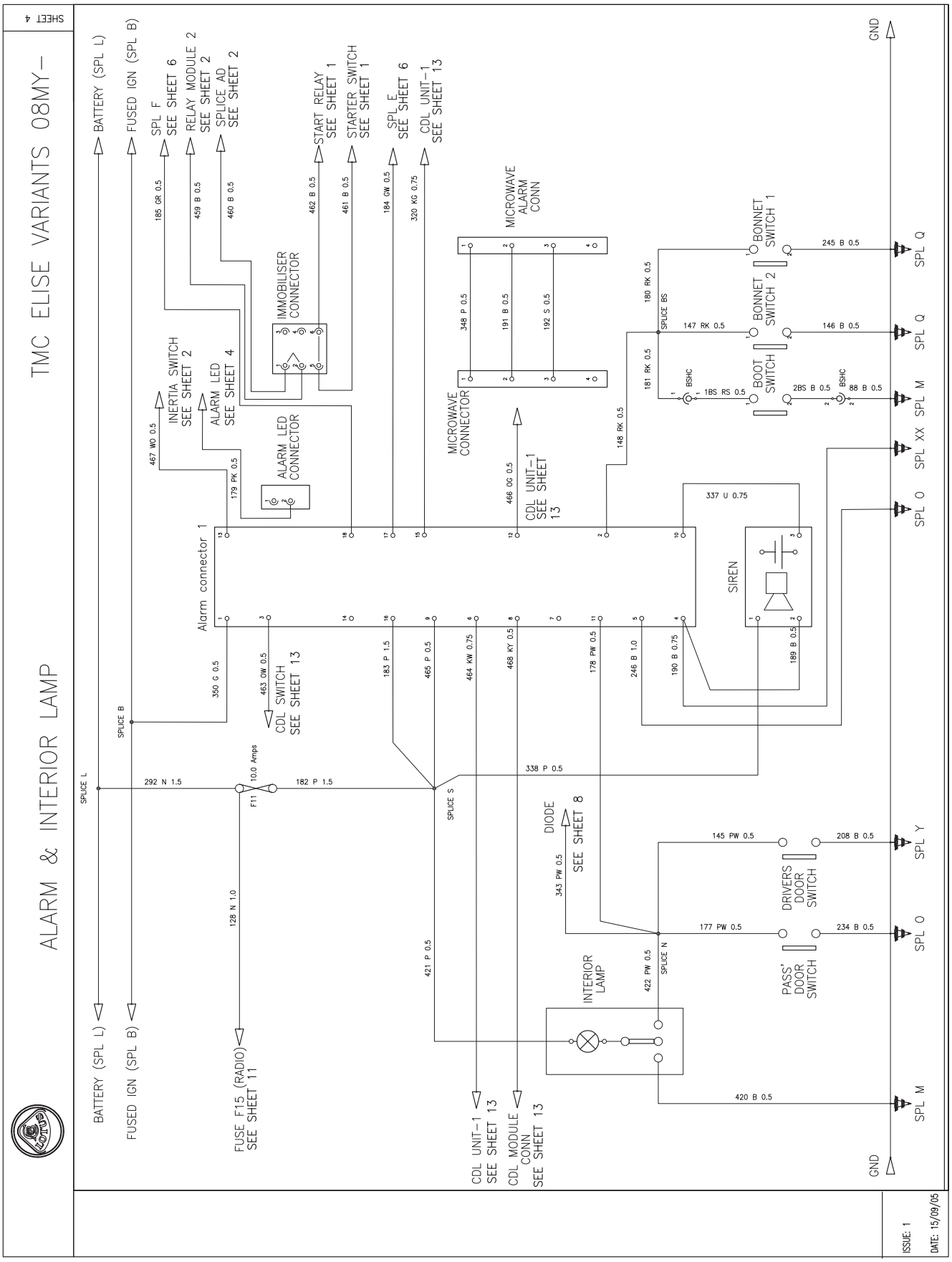

Downloaded from www.Manualslib.com manuals search engine

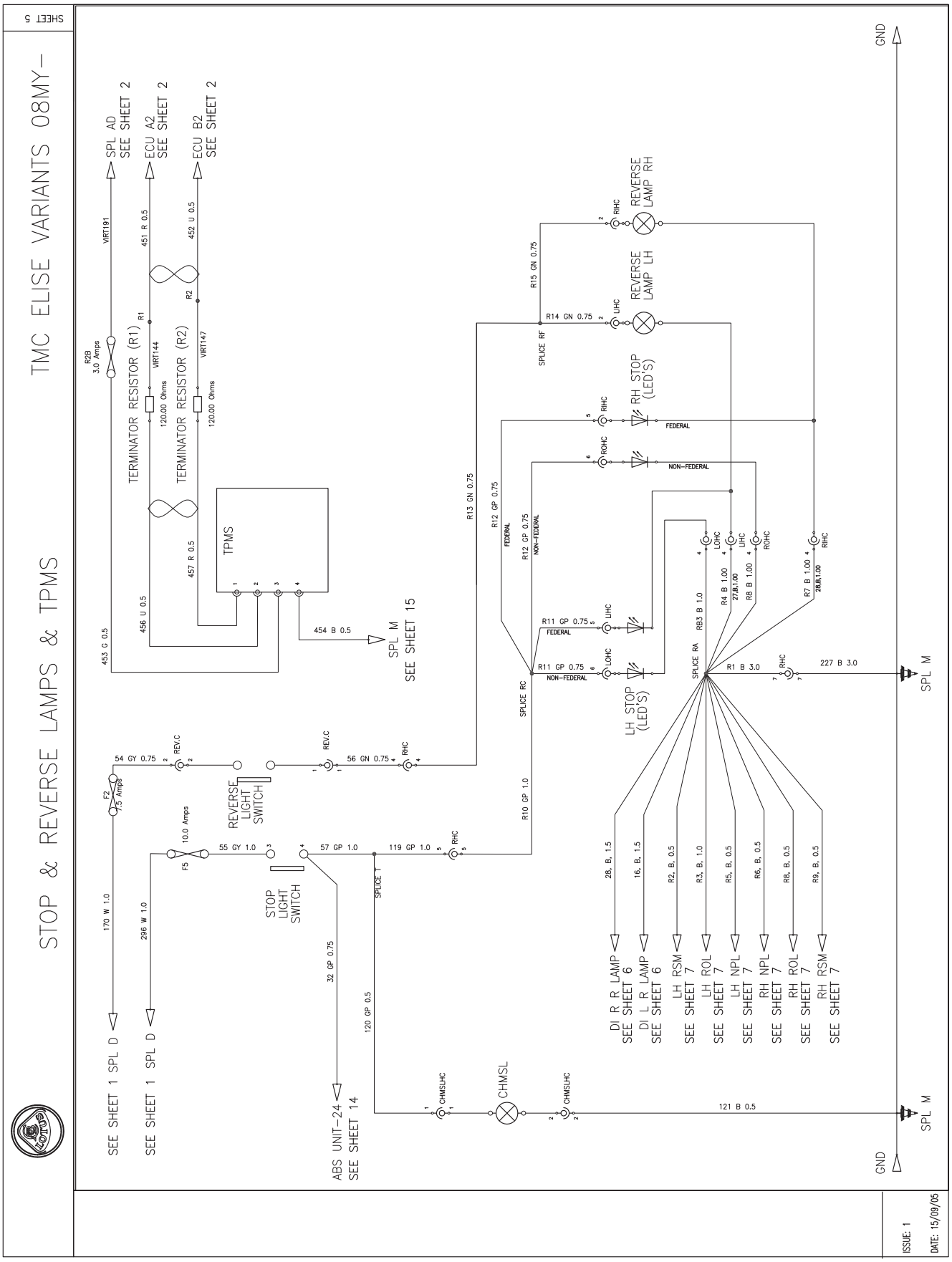

Downloaded from www.Manualslib.com manuals search engine

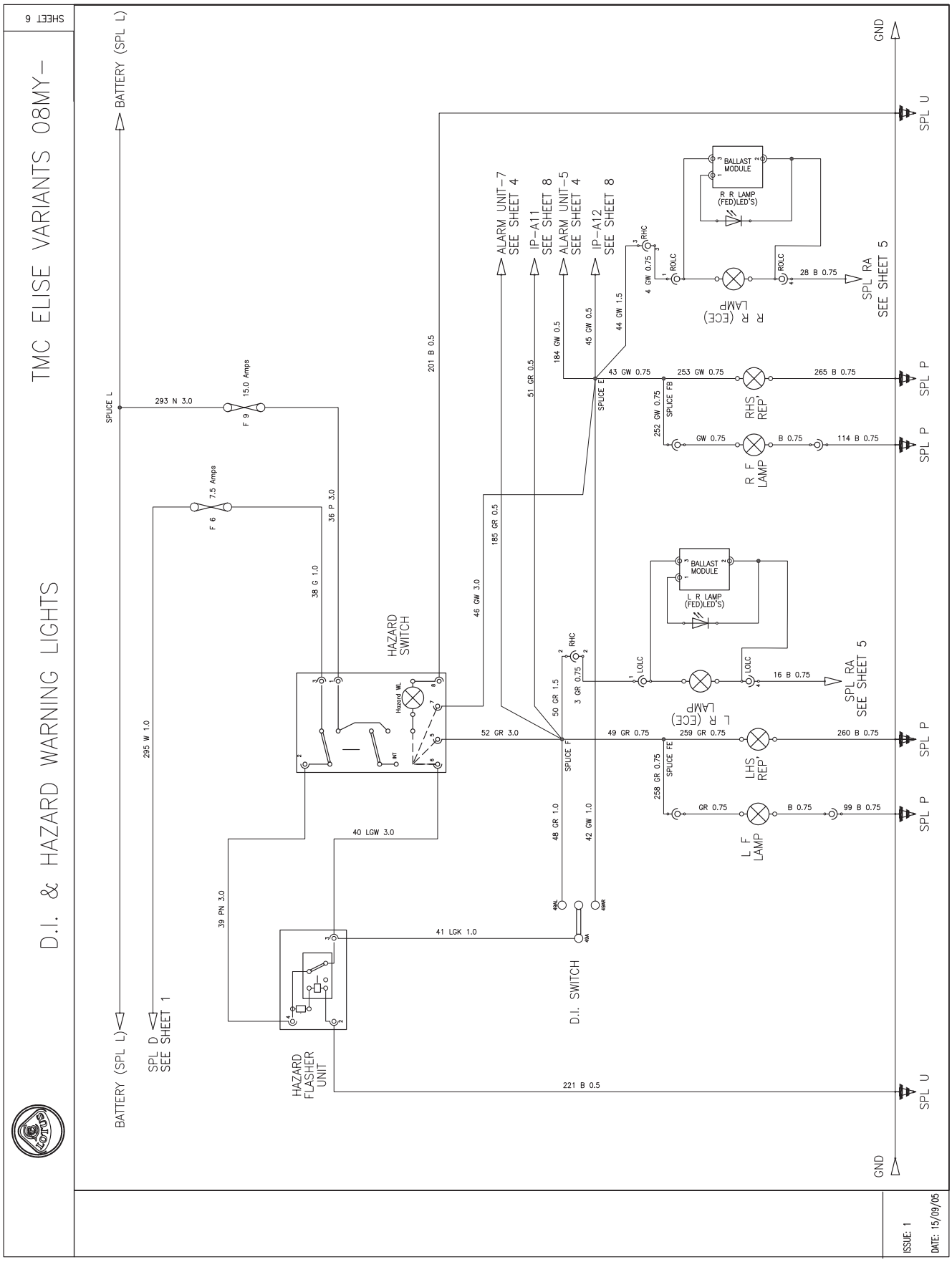

Downloaded from www.Manualslib.com manuals search engine

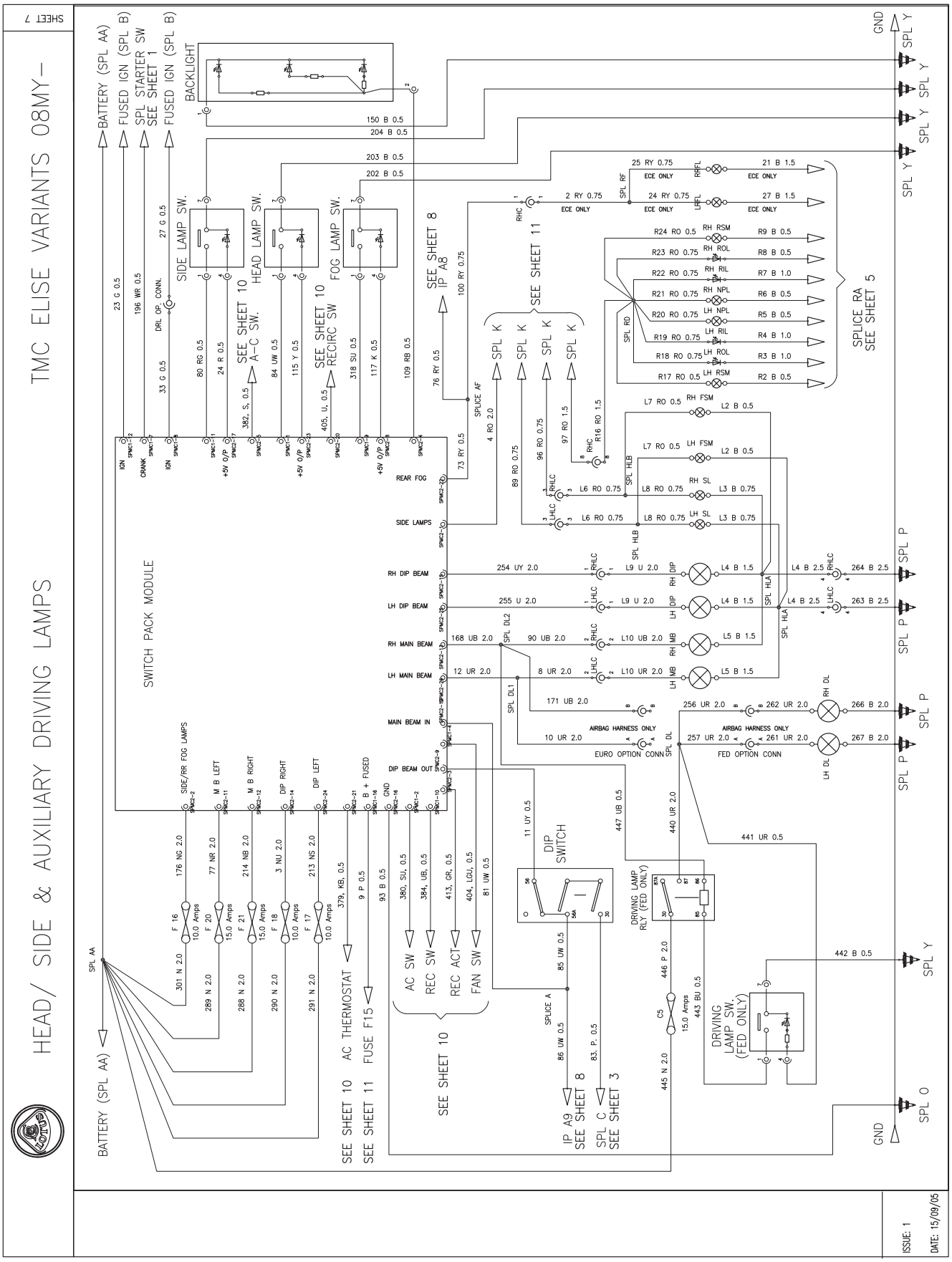

Downloaded from www.Manualslib.com manuals search engine

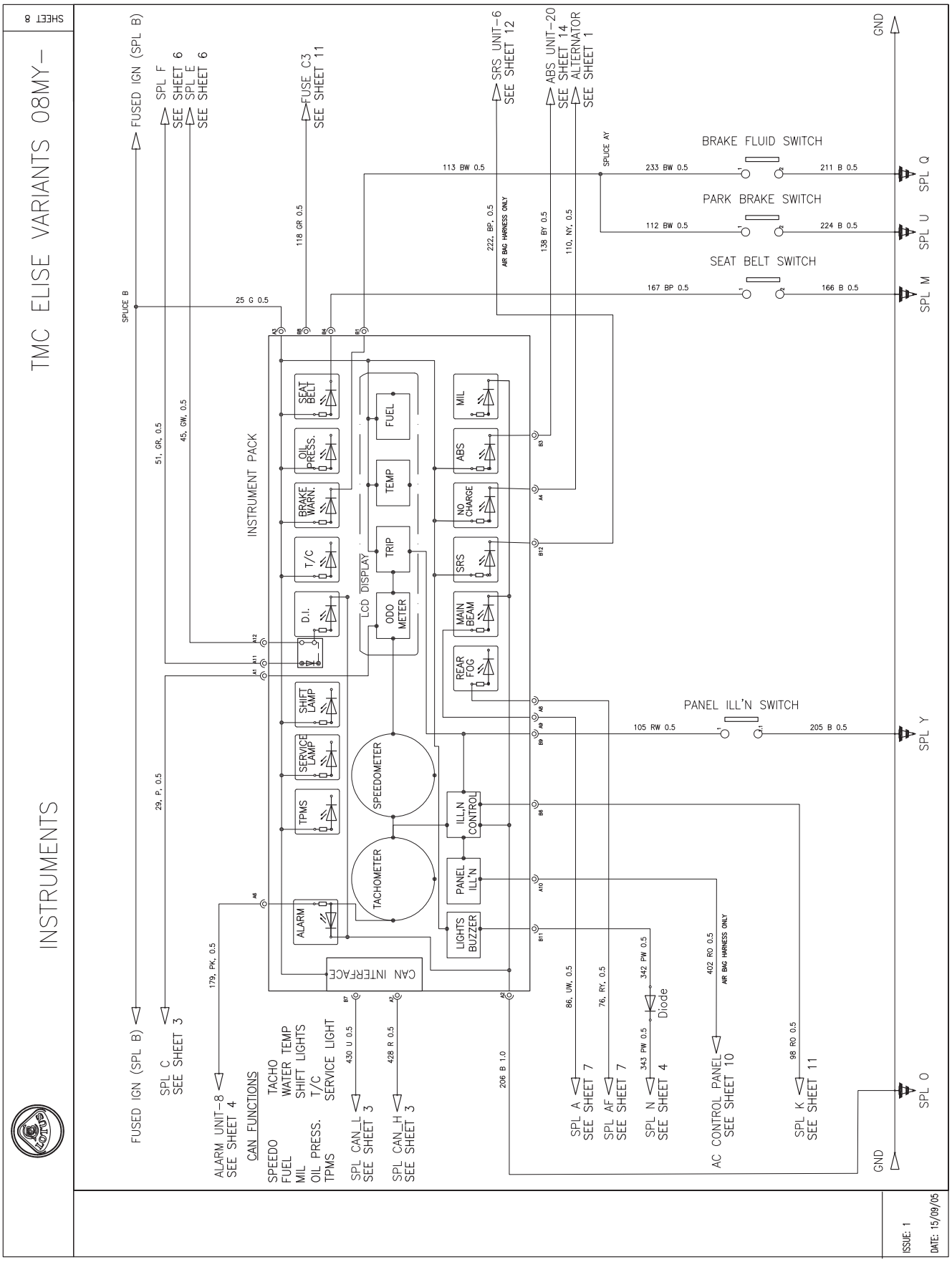

Downloaded from www.Manualslib.com manuals search engine

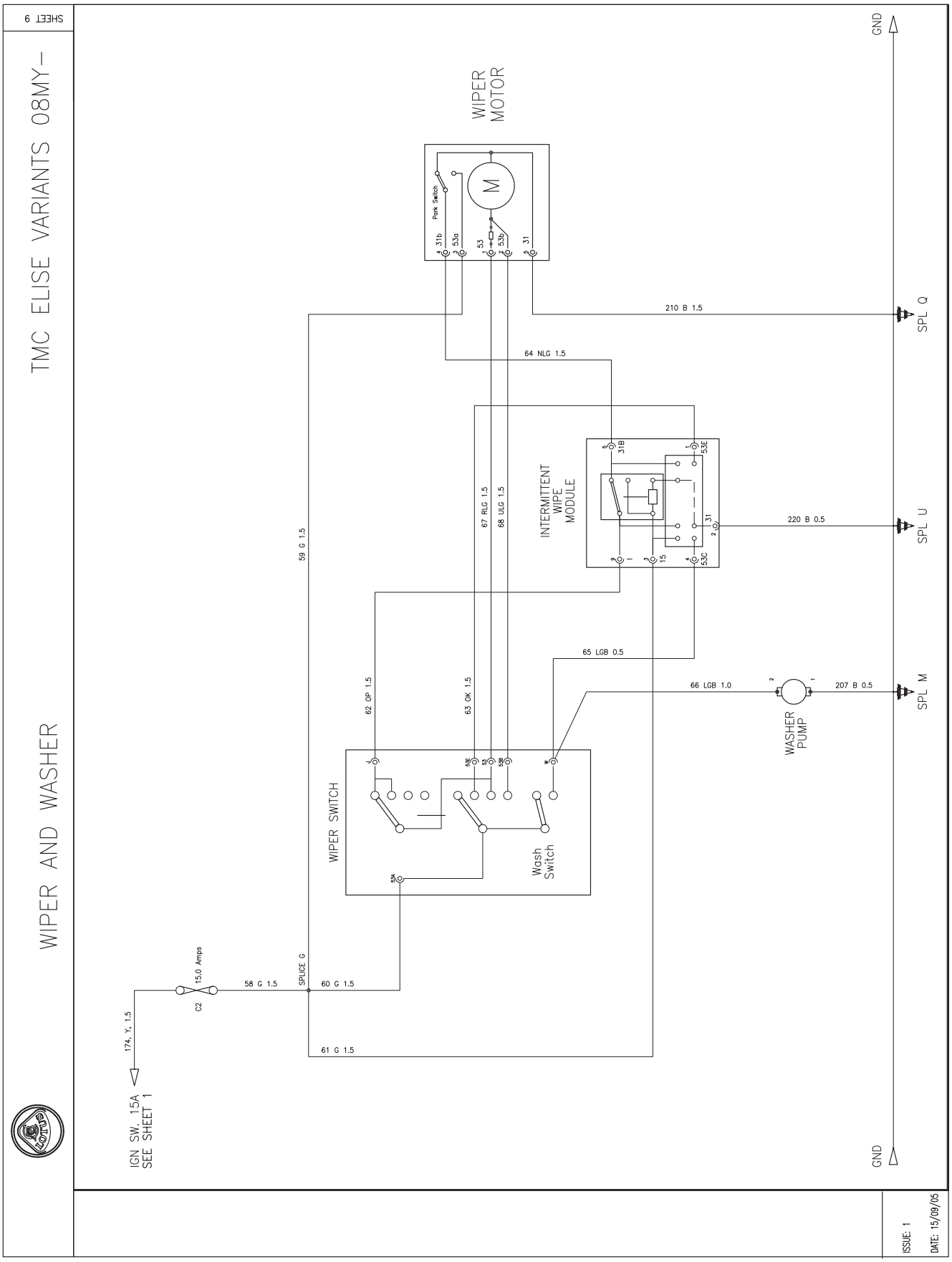

Downloaded from www.Manualslib.com manuals search engine

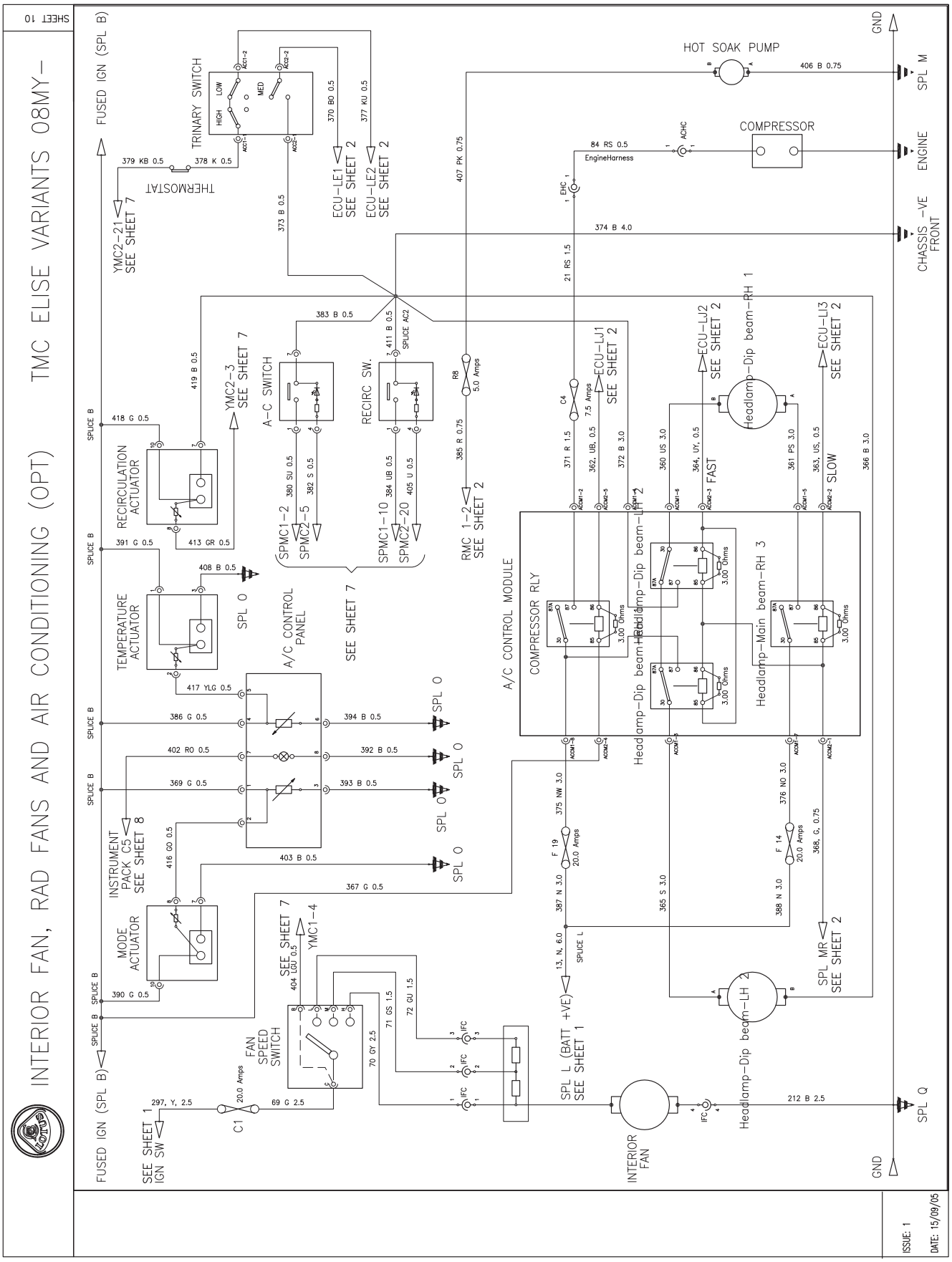

Downloaded from www.Manualslib.com manuals search engine

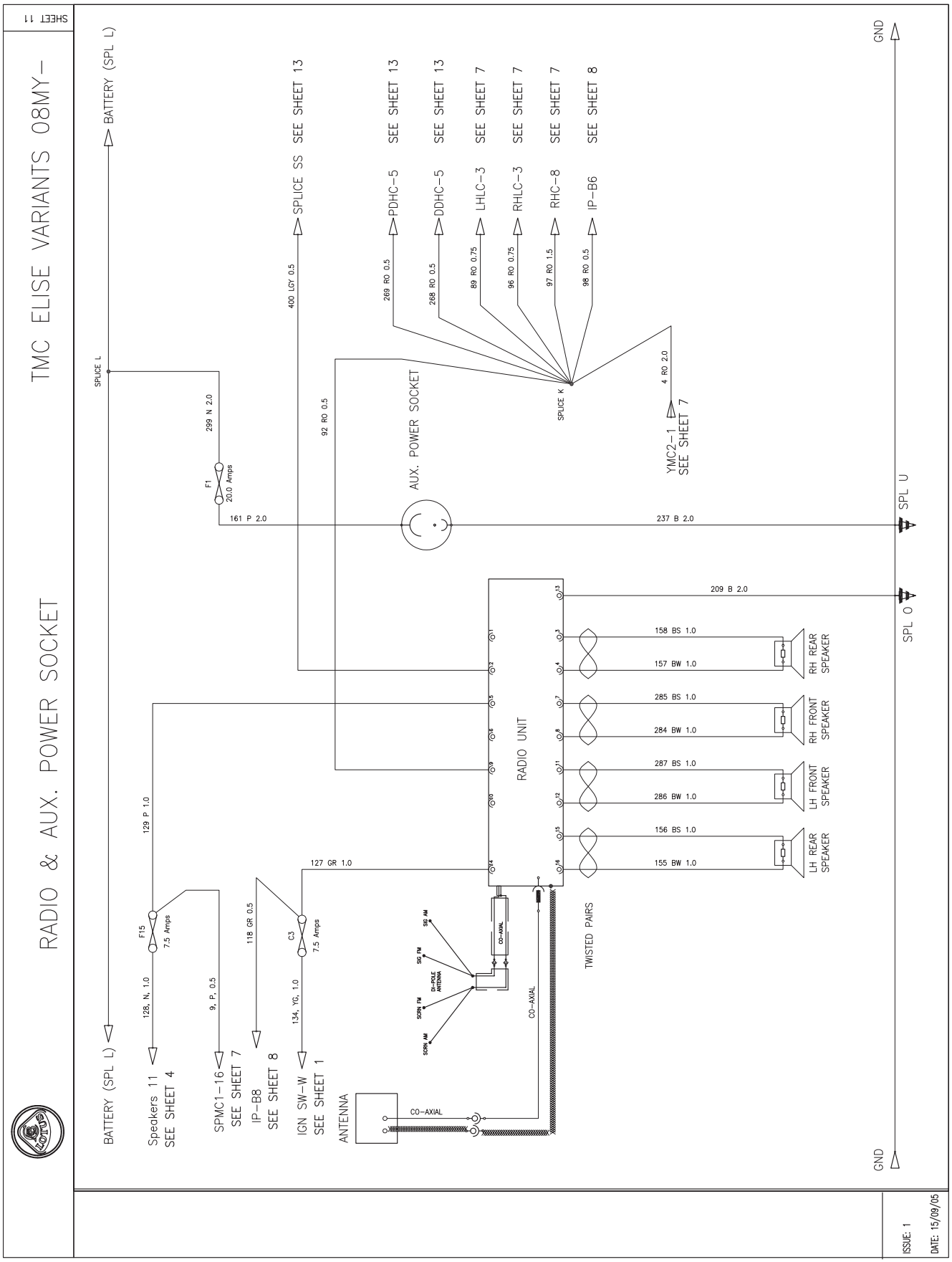

Downloaded from www.Manualslib.com manuals search engine

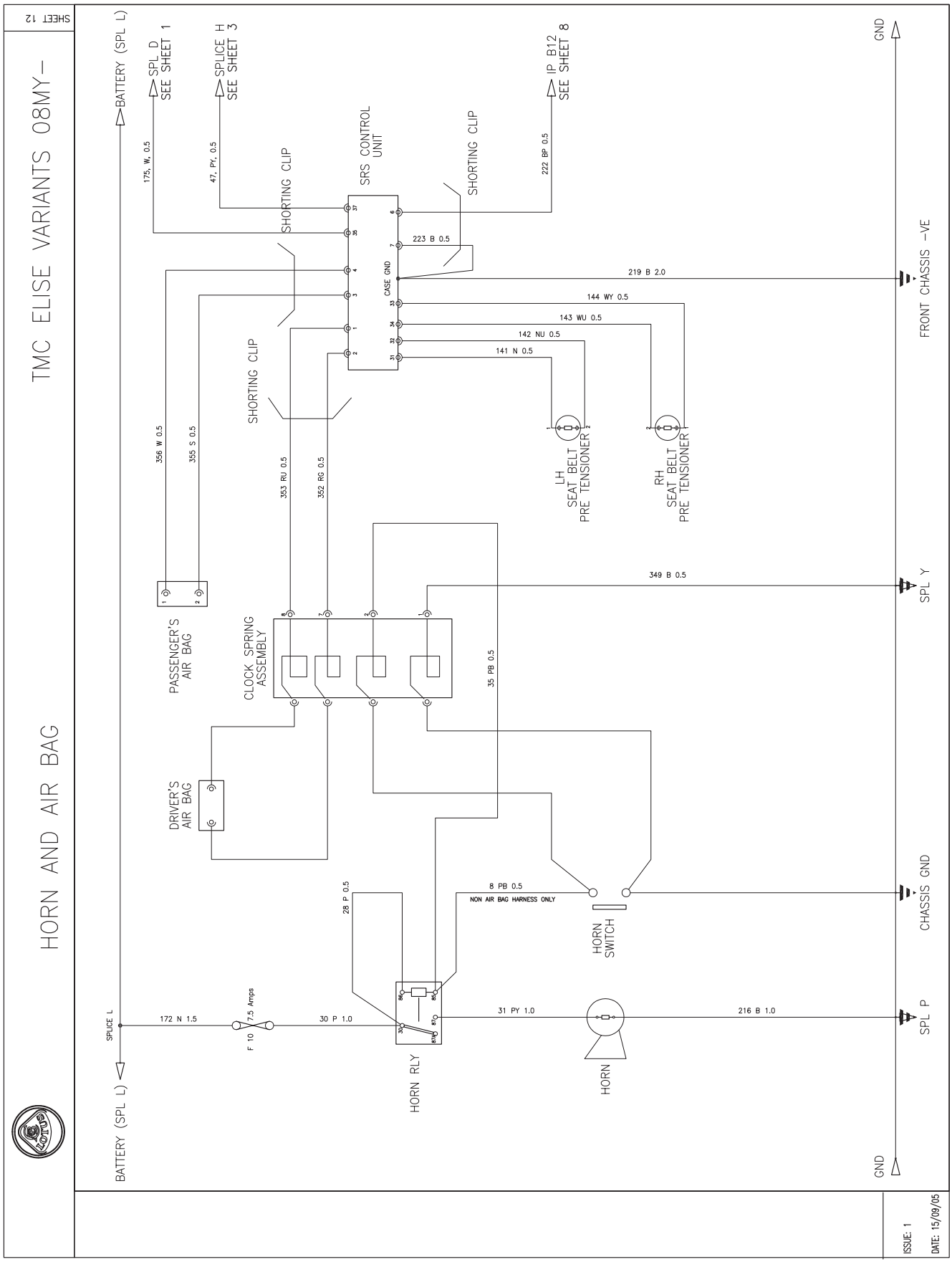

Downloaded from www.Manualslib.com manuals search engine

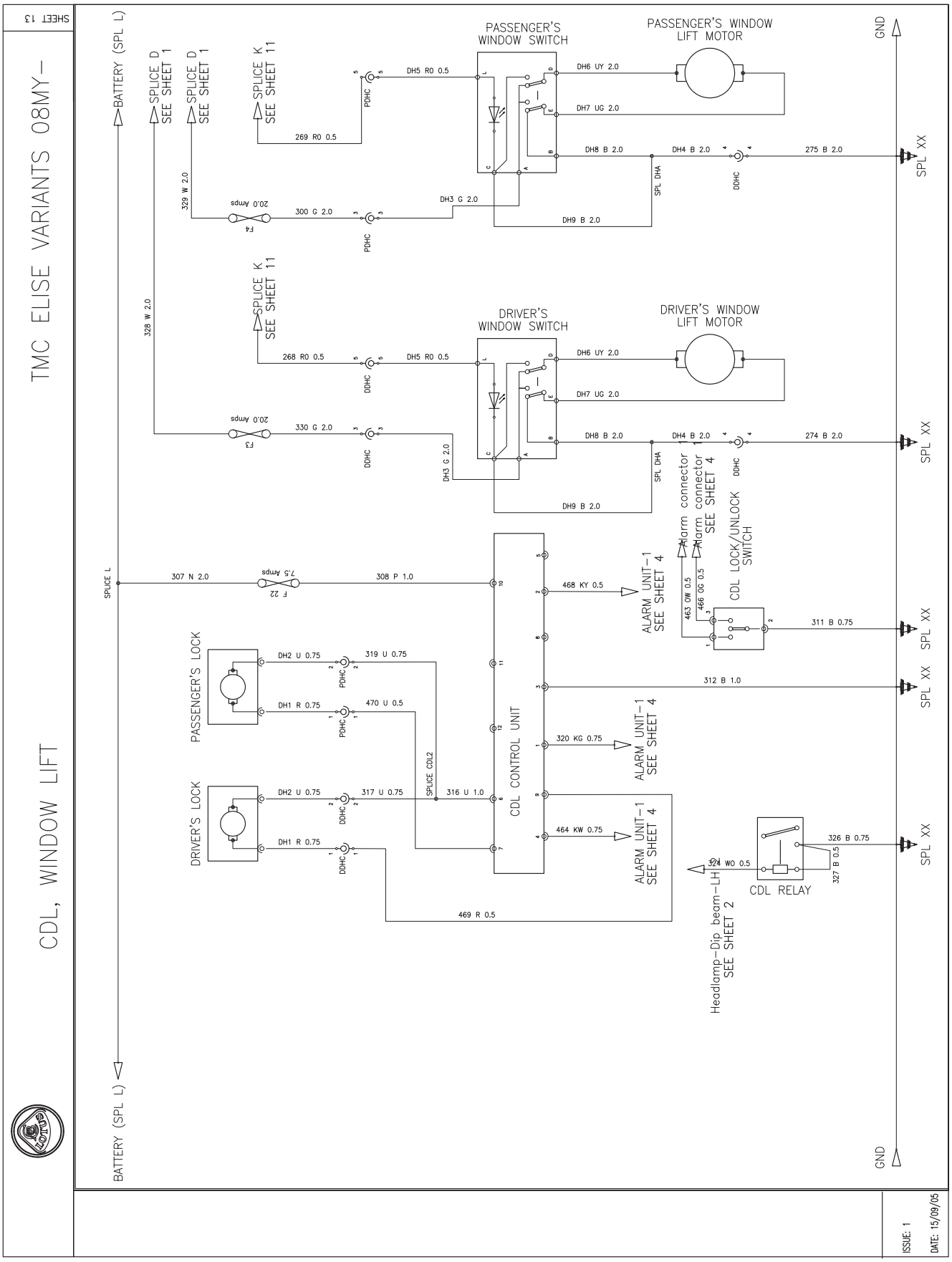

Downloaded from www.Manualslib.com manuals search engine

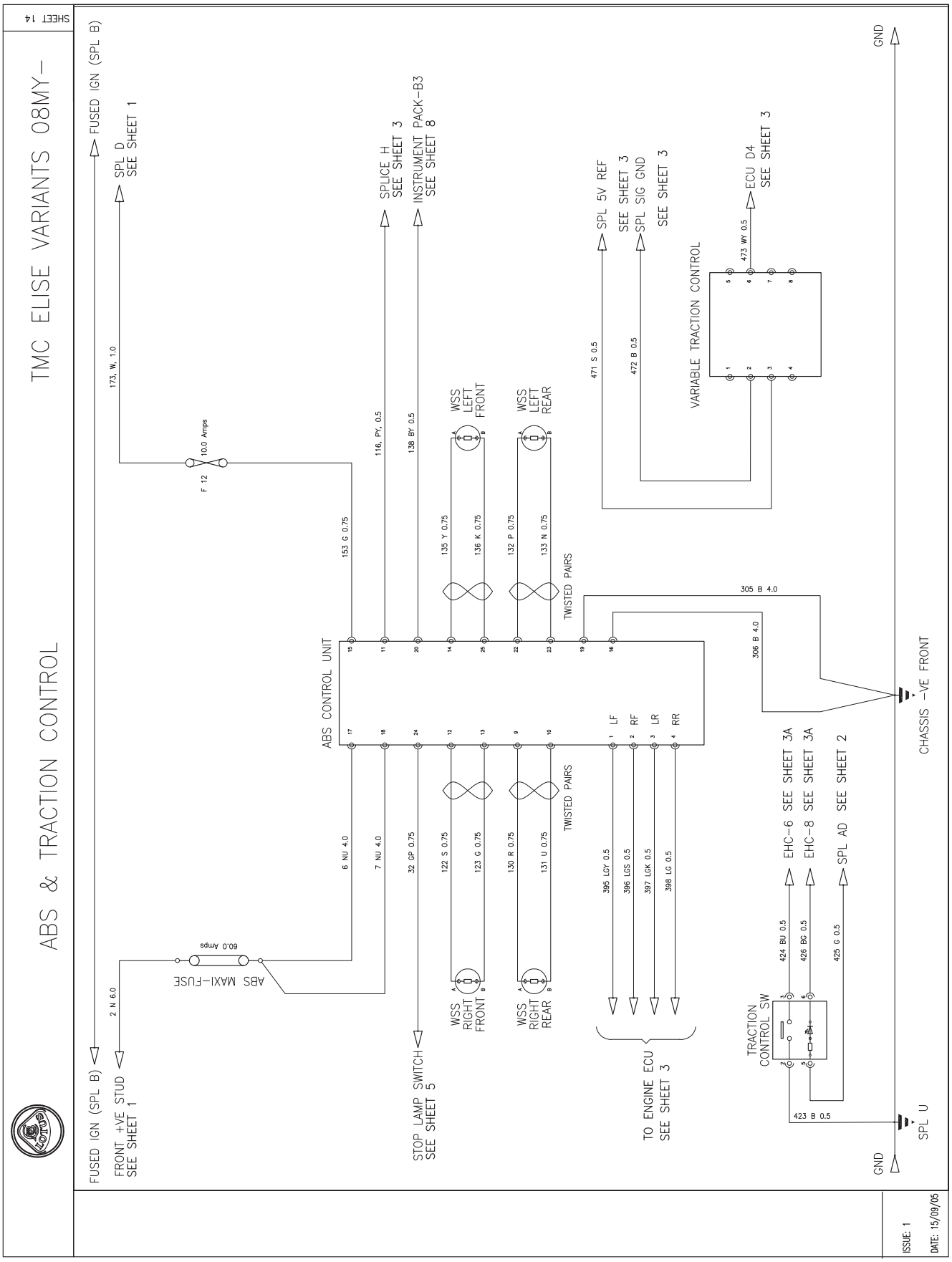

Downloaded from www.Manualslib.com manuals search engine

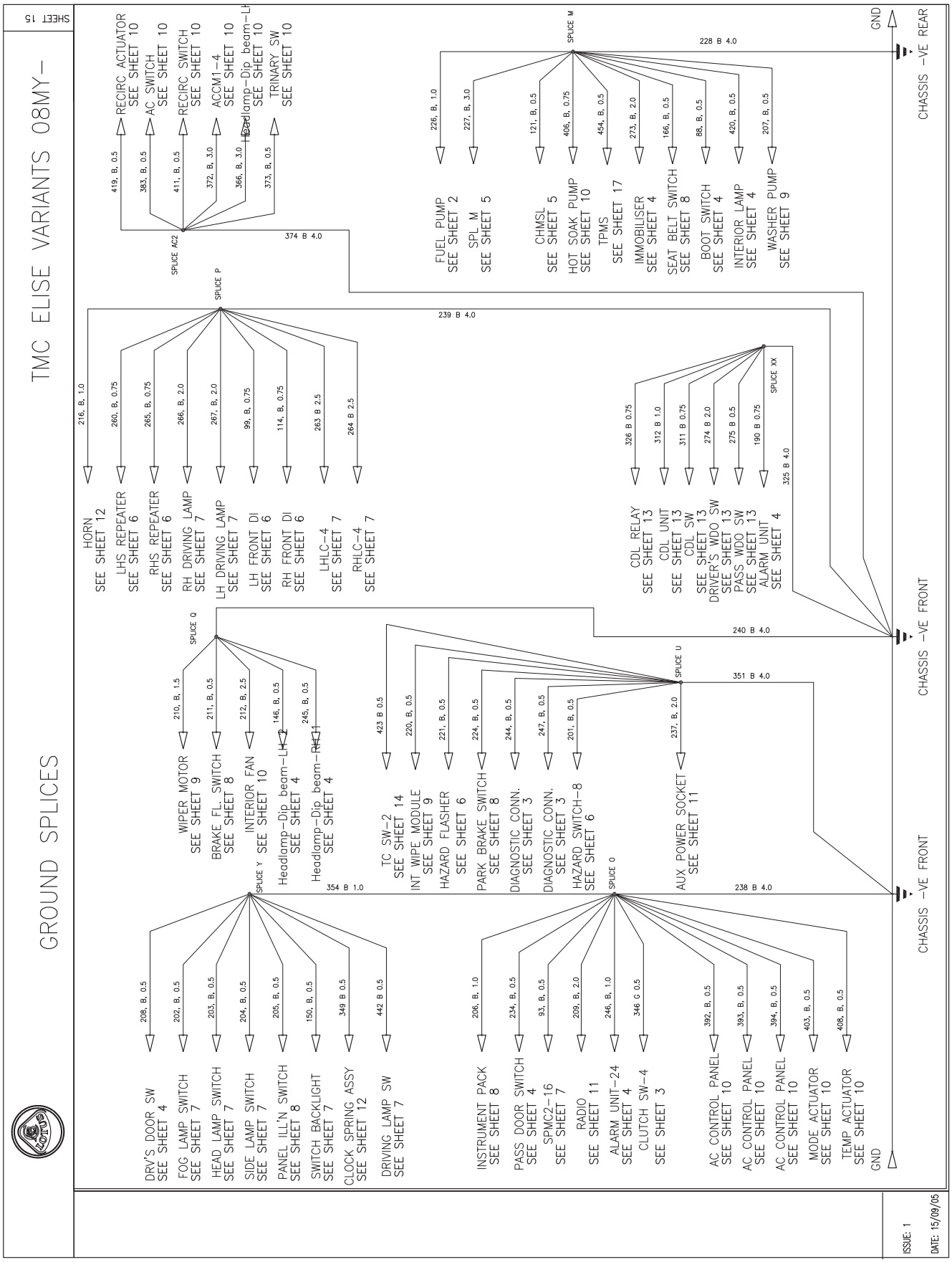

Downloaded from www.Manualslib.com manuals search engine

Downloaded from www.Manualslib.com manuals search engine

FUSE INFORMATION

TMC ELISE VARIANTS 08MY–

SHEET 16

FUSE N0	LOCATION	FUNCTION	RATING	SUPPLY TYPE
F1	FRONT	AUXILLARY POWER SOCKET	20A	BATTERY
F2	FRONT	REVERSE LAMPS	5A	IGNITION
F3	FRONT	DRIVER'S WINDOW MOTOR	20A	IGNITION
F4	FRONT	PASSENGER'S WINDOW MOTOR	20A	IGNITION
F5	FRONT	STOP LAMPS	10A	IGNITION
F6	FRONT	DIRECTION INDICATORS	7.5A	IGNITION
F7	FRONT	IGNITION SERVICES	10A	IGNITION
F8	FRONT	BATTERY SERVICES	7.5A	BATTERY
F9	FRONT	HAZARDS	15A	BATTERY
F10	FRONT	HORN	7.5A	BATTERY
F11	FRONT	ALARM & INTERIOR LAMP	10A	BATTERY
F12	FRONT	ABS	10A	IGNITION
F13	FRONT	ECU / STARTER SW / IMMOBILSER	3A	IGNITION
F14	FRONT	RAD FANS 1&2 SLOW / RAD FAN 1 FAST	20A	BATTERY
F15	FRONT	RADIO / SWITCH PACK MODULE	7.5A	BATTERY
F16	FRONT	SIDELAMP / REAR FOG LAMP	10A	BATTERY
F17	FRONT	LH DIP BEAM	10A	BATTERY
F18	FRONT	RH DIP BEAM	10A	BATTERY
F19	FRONT	AC COMP RLY / RAD FAN 2 FAST	20A	BATTERY
F20	FRONT	LH MAIN BEAM	15A	BATTERY
F21	FRONT	RH MAIN BEAM	15A	BATTERY
F22	FRONT	CDL	7.5A	BATTERY
C1	CABIN	INTERIOR FAN	20A	START DROP OUT
C2	CABIN	WIPER MOTOR	15A	START DROP OUT
C3	CABIN	RADIO KEY IN	7.5A	KEY IN
C4	CABIN	AC COMPRESSCR	7.5A	IGNITION
C5	CABIN	AUXILLARY DRIVING LAMPS	15A	BATTERY
R1	ENGINE BAY	FUEL PUMP	20A	BATTERY
R2	ENGINE BAY	TPMS	3A	BATTERY
R3	ENGINE BAY	ALTERNATOR SENSE	5A	BATTERY
R4	ENGINE BAY	ECU B+	5A	BATTERY
R5	ENGINE BAY	02 HEATERS	5A	ECU CONTROLLED
R6	ENGINE BAY	VSV'S VVT,VVL,IAC	7.5A	ECU CONTROLLED
R7	ENGINE BAY	INJ'S & COILS / ECU MAIN PWR / AC MOD	10A	ECU CONTROLLED
R8	ENGINE BAY	HOT SOAK PUMP	5A	ECU CONTROLLED
M1	CROSS CAR BEAM	ABS MAIN POWER	60A	BATTERY

FRONT FUSEBOX

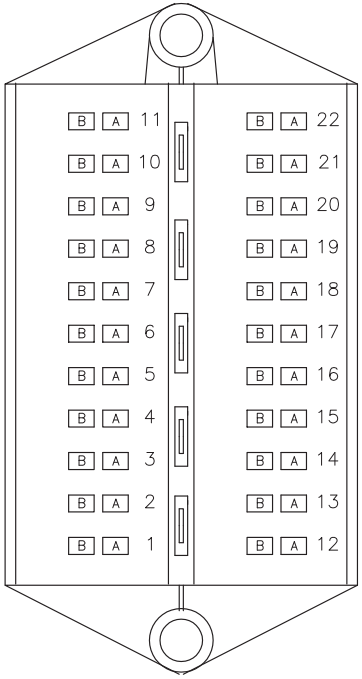

CABIN FUSES

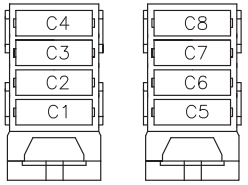

REAR FUSES

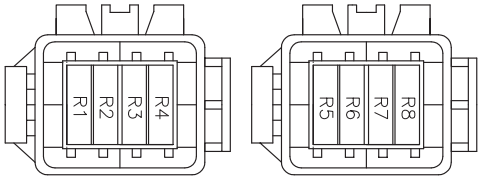

ISSUE: 1

DATE: 15/09/05

Start Alternator & Ignition

ELISE NORTH AMERICA 05MY

SHEET 1

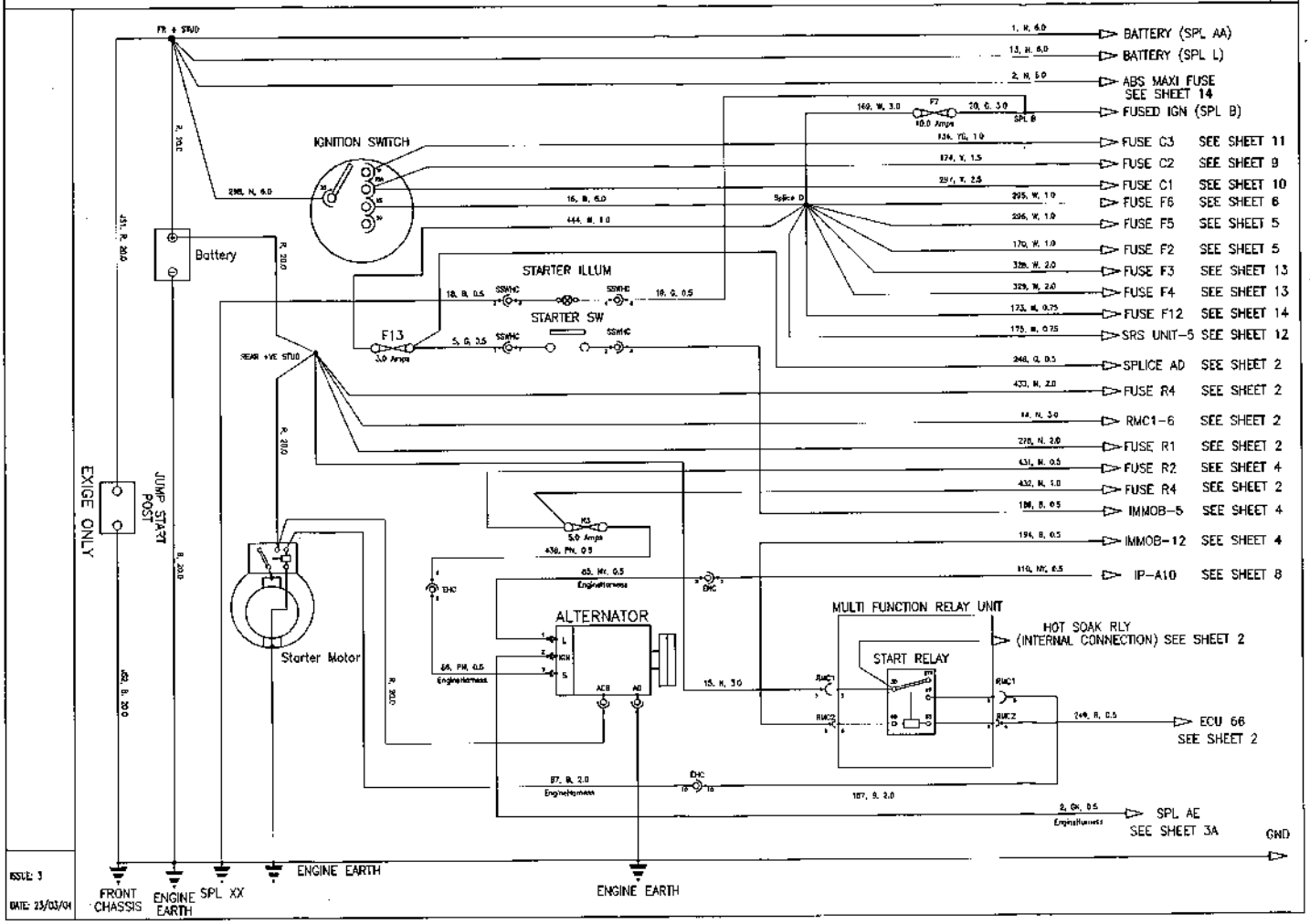

Downloaded from www.Manualslib.com manuals search engine

FUEL PUMP_ECU 1

ELISE NORTH AMERICA 05MY

SHEET 2

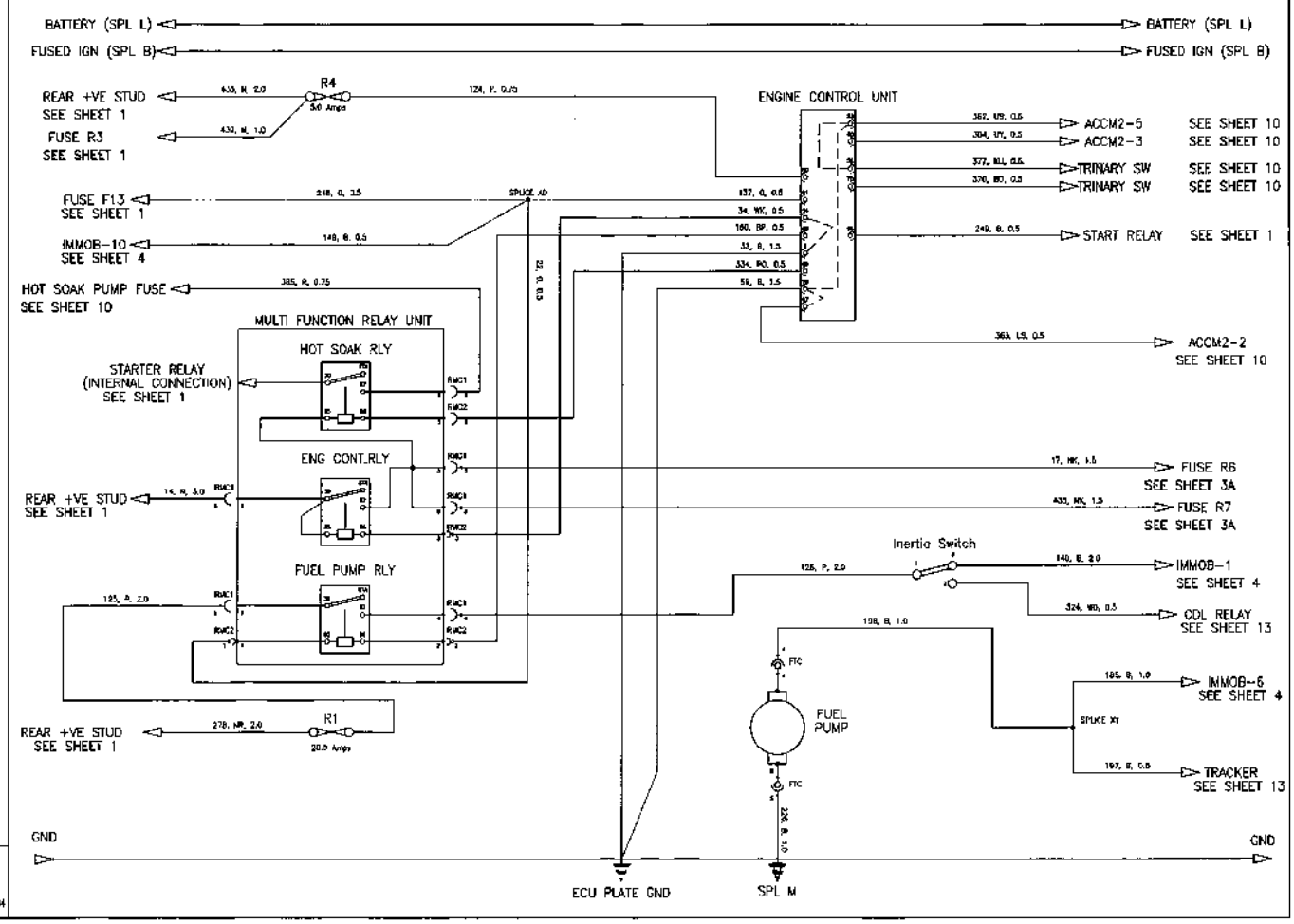

ISSUE 3

DATE: 23/03/04

Downloaded from www.Manualslib.com manuals search engine

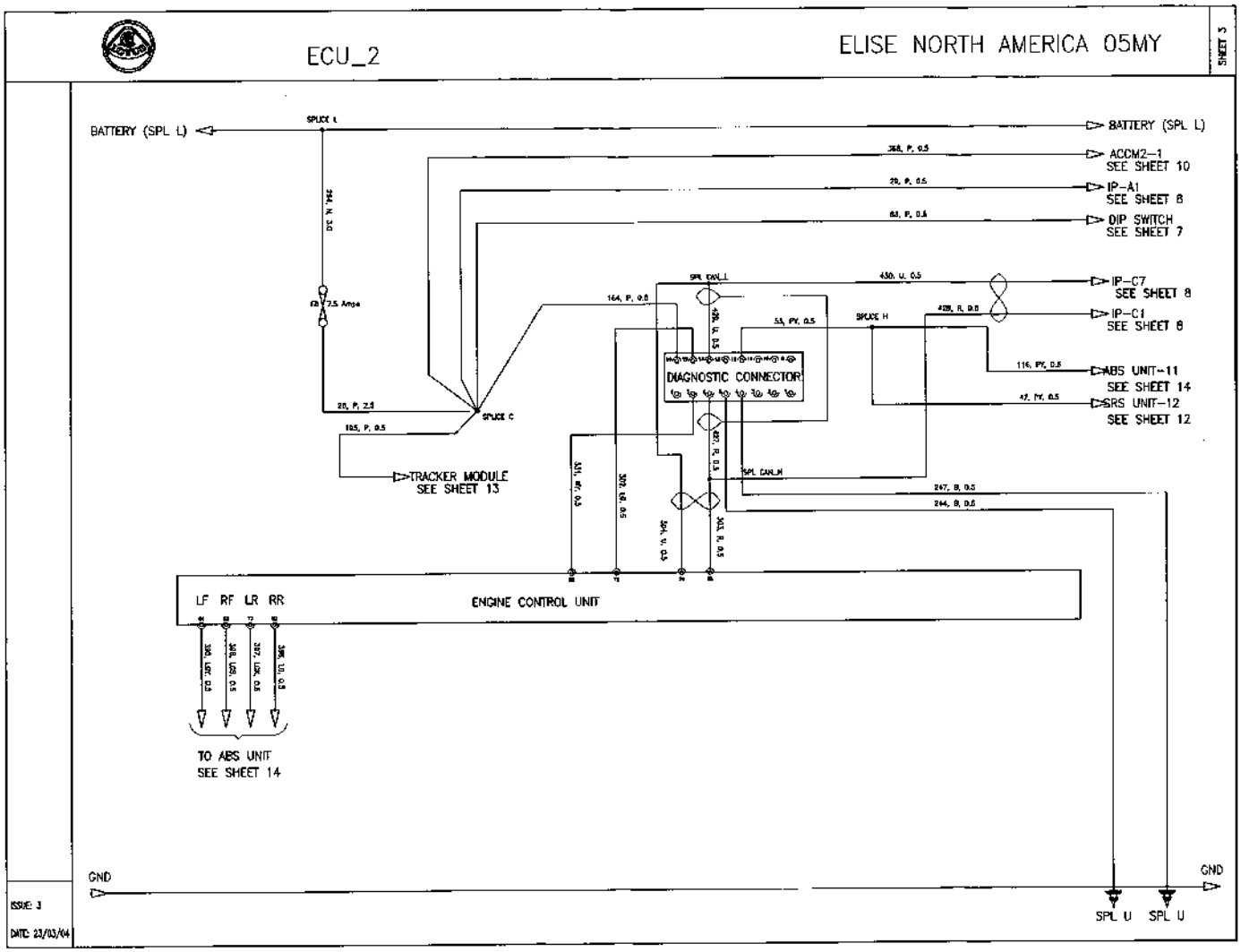

Downloaded from www.Manualslib.com manuals search engine

ECU_3

ELISE NORTH AMERICA 05MY

SHEET 7A

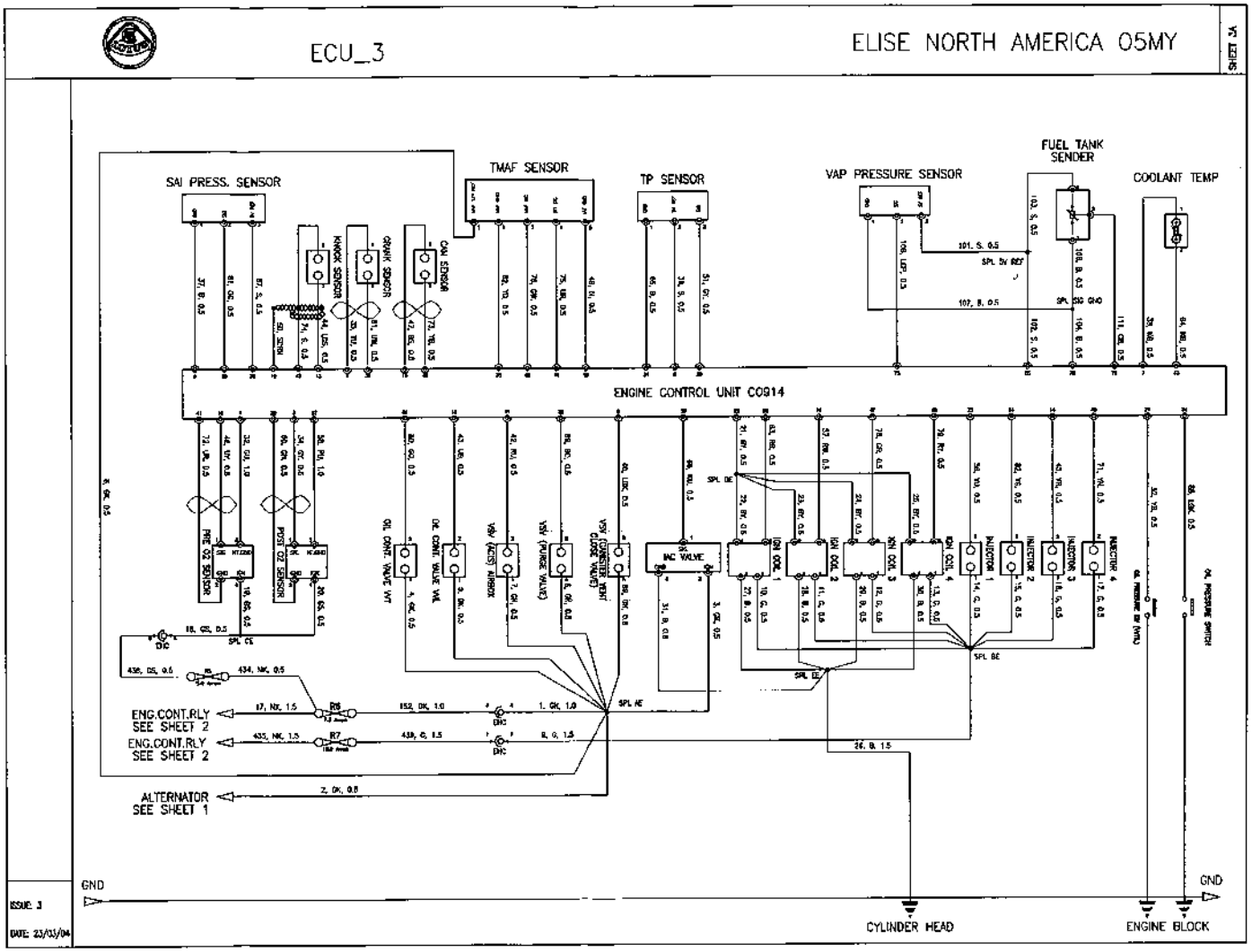

ISSUE: 3

DATE: 23/03/04

Downloaded from www.Manualslib.com manuals search engine

ALARM & INTERIOR LAMP

ELISE NORTH AMERICA 05MY

SHEET 4

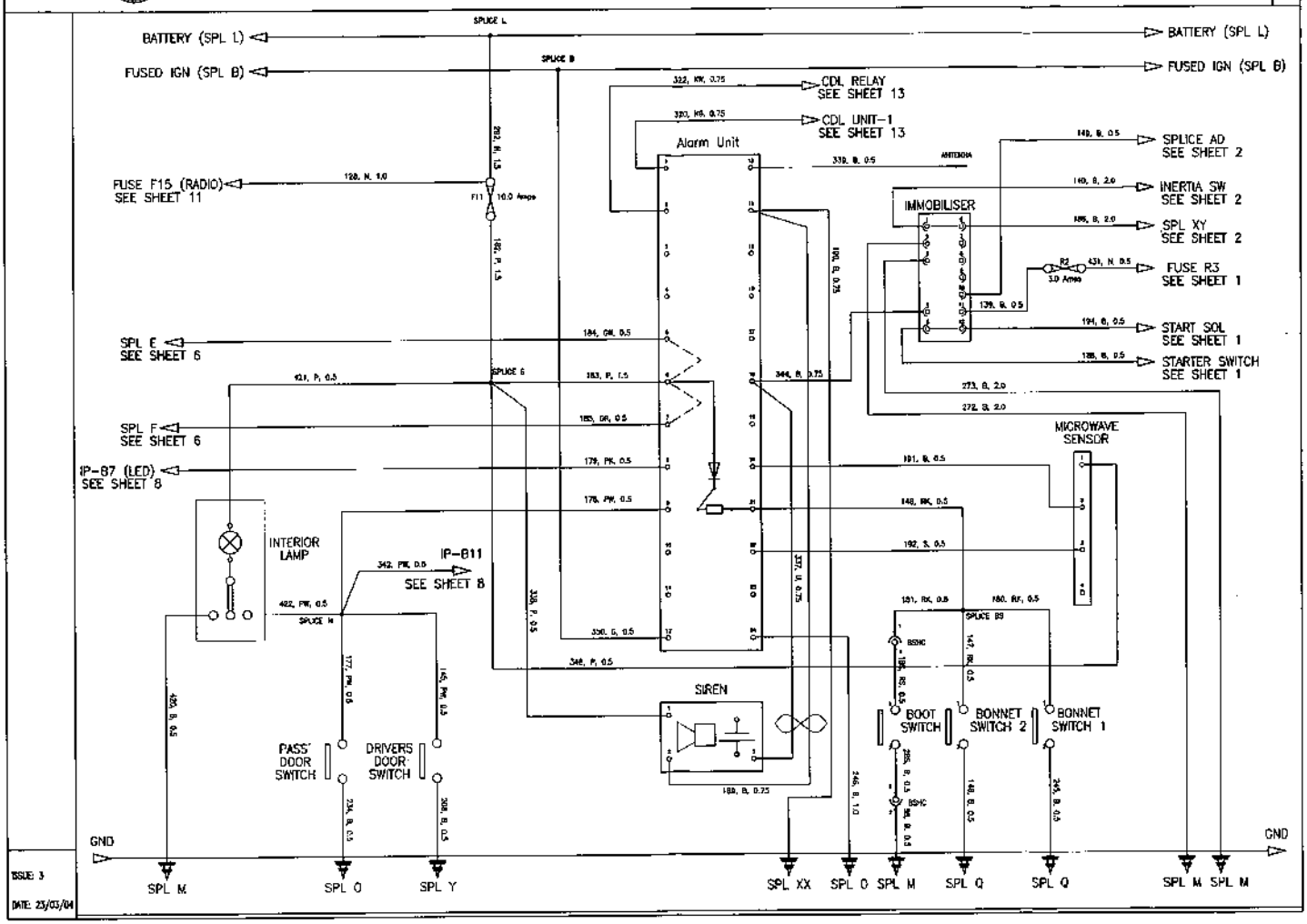

ISSUE: 3

DATE: 23/03/04

Downloaded from www.Manualslib.com manuals search engine

STOP & REVERSE LAMPS

ELISE NORTH AMERICA 05MY

SHEET 5

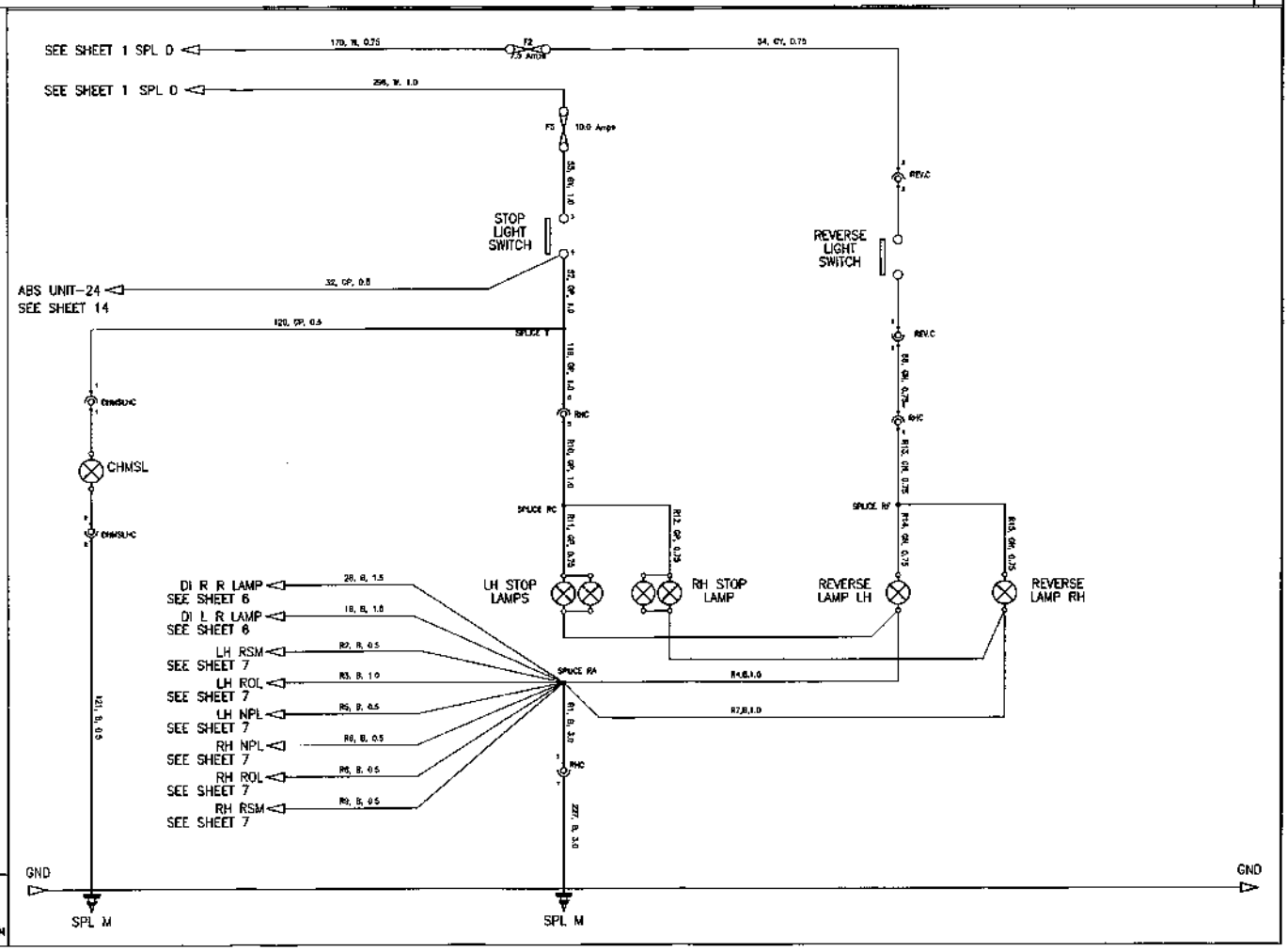

ISSUE: 3

DATE: 23/03/04

Downloaded from www.Manualslib.com manuals search engine

D.I. & HAZARD WARNING LIGHTS

ELISE NORTH AMERICA 05MY

SHEET 6

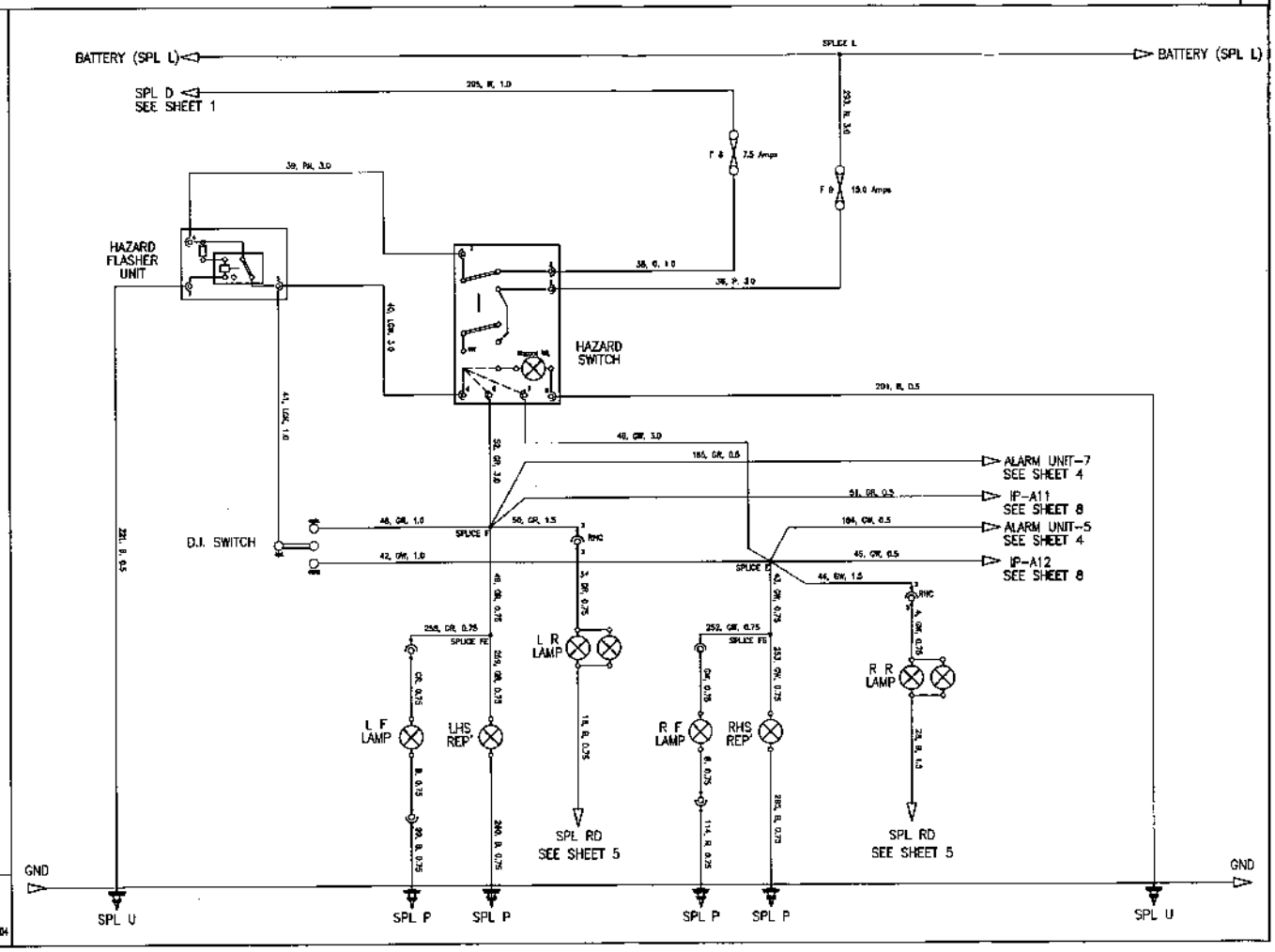

ISSUE: 3

DATE: 23/03/04

Downloaded from www.Manualslib.com manuals search engine

HEAD/ SIDE & AUXILLARY DRIVING LAMPS

ELISE NORTH AMERICA 05MY

SHEET 7

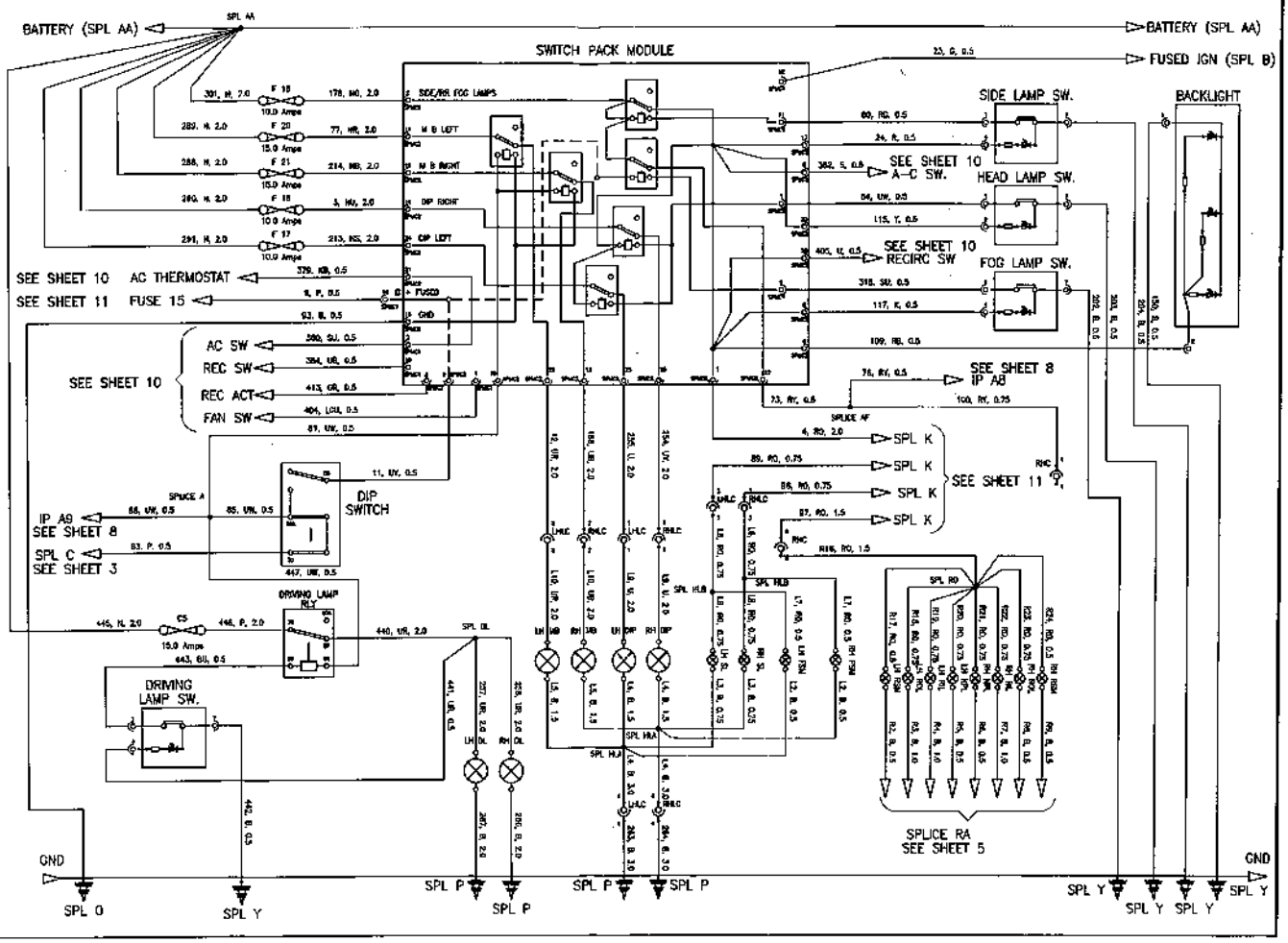

ISSUE: 3

DATE: 23/03/04

Downloaded from www.Manualslib.com manuals search engine

INSTRUMENTS

ELISE NORTH AMERICA 05MY

SHEET 6

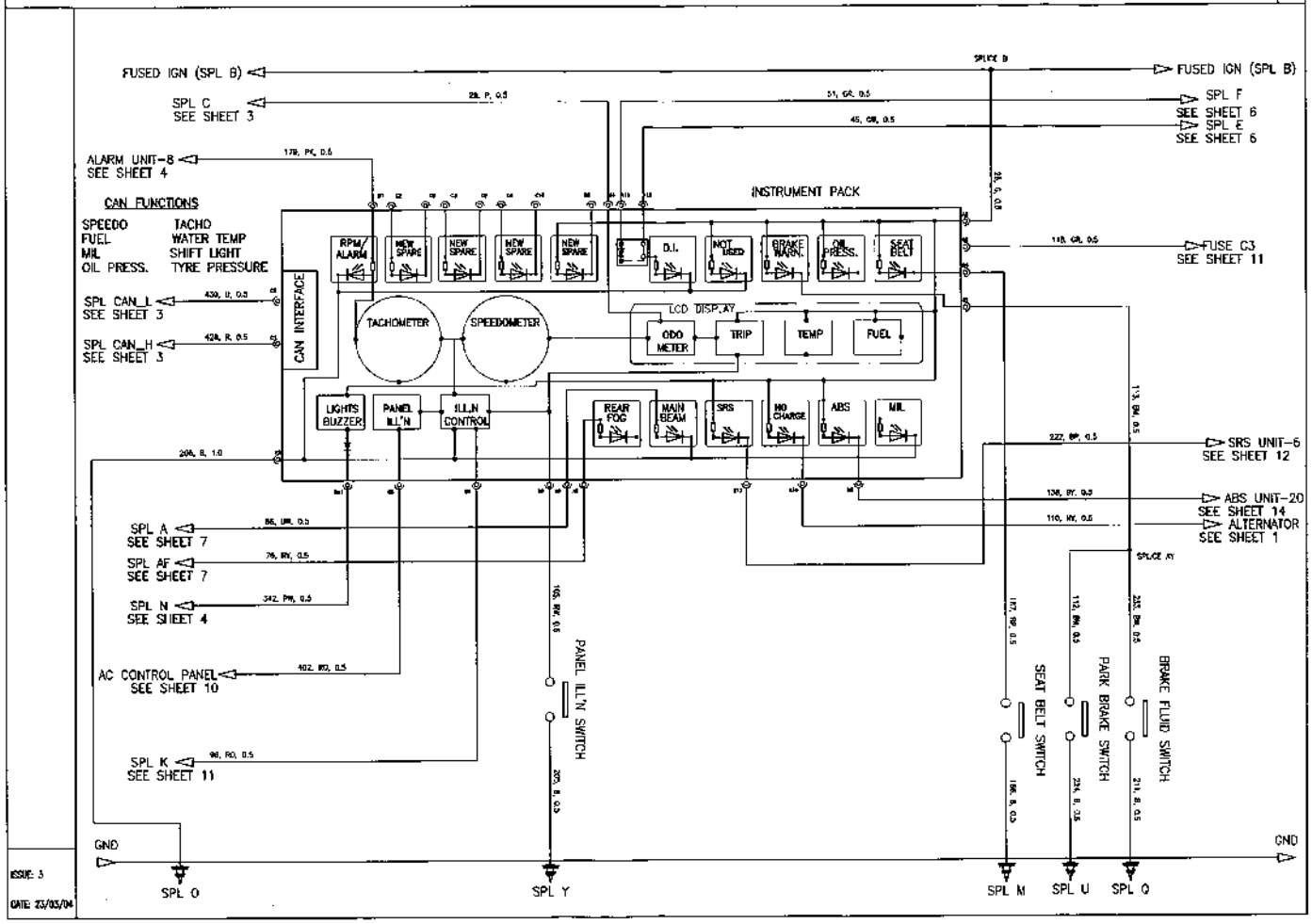

ISSUE: 3

DATE: 23/03/04

Downloaded from www.Manualslib.com manuals search engine

WIPER AND WASHER

ELISE NORTH AMERICA 05MY

SHEET 9

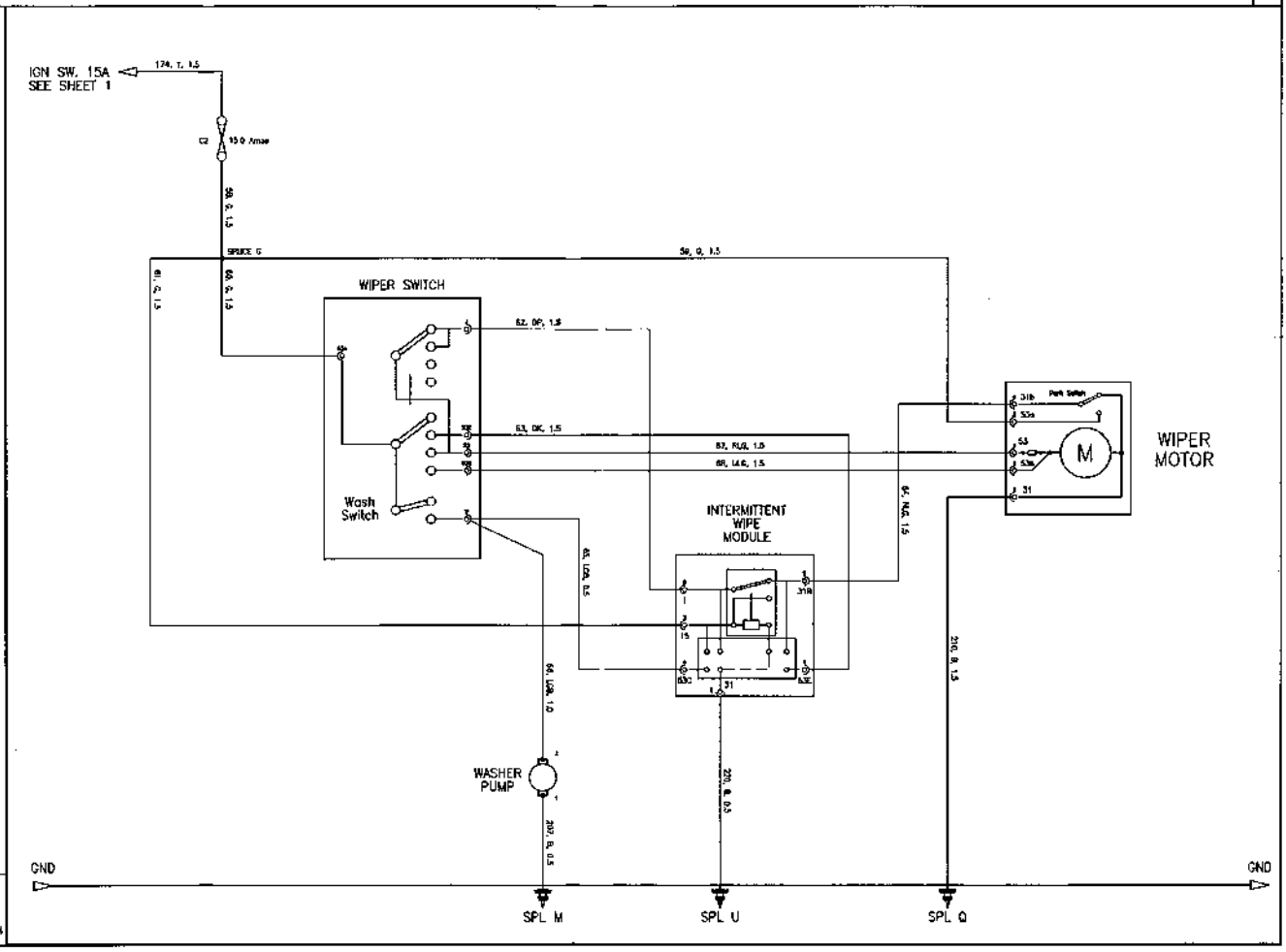

ISSUE: 3

DATE: 23/03/04

Downloaded from www.Manualslib.com manuals search engine

INTERIOR FAN, RAD FANS AND AIR CONDITIONING (OPT) ELISE NORTH AMERICA 05MY

SHEET 10

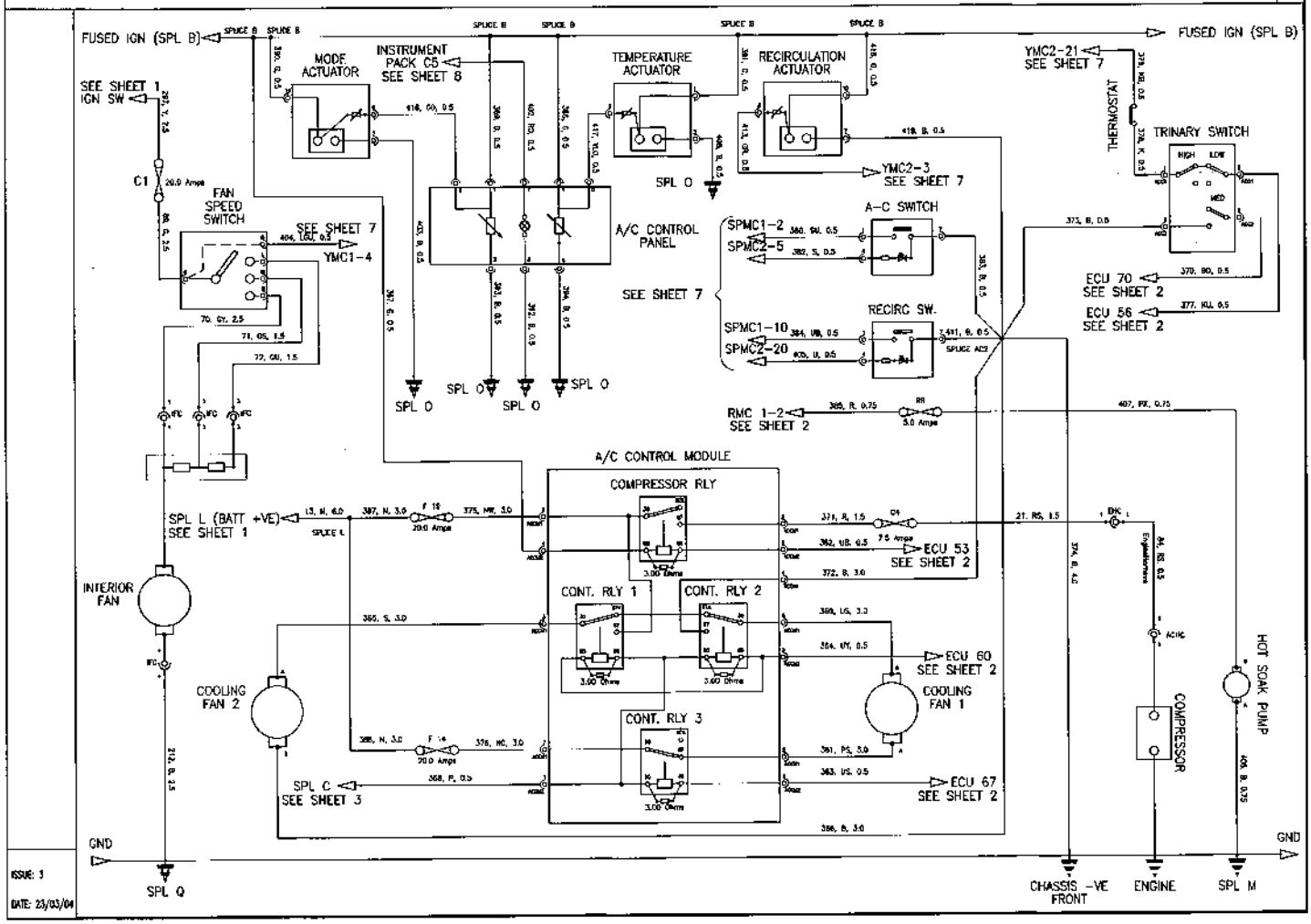

ISSUE: 1

DATE: 23/03/04

Downloaded from www.Manualslib.com manuals search engine

RADIO & AUX. POWER SOCKET

ELISE NORTH AMERICA 05MY

SHEET 11

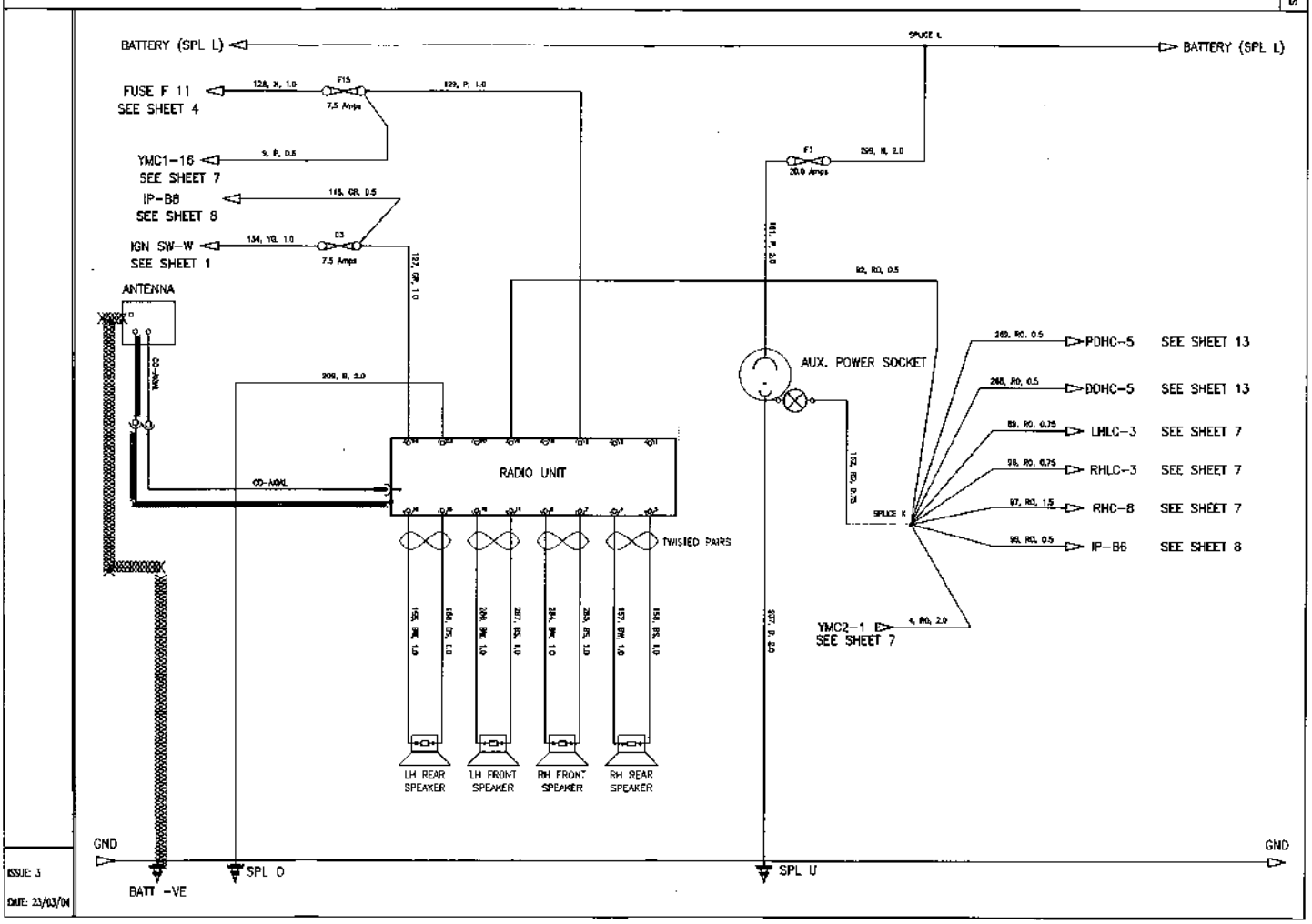

ISSUE: 3

DATE: 23/03/04

Downloaded from www.Manualslib.com manuals search engine

HORN AND AIR BAG

ELISE NORTH AMERICA 05MY

SHEET 12

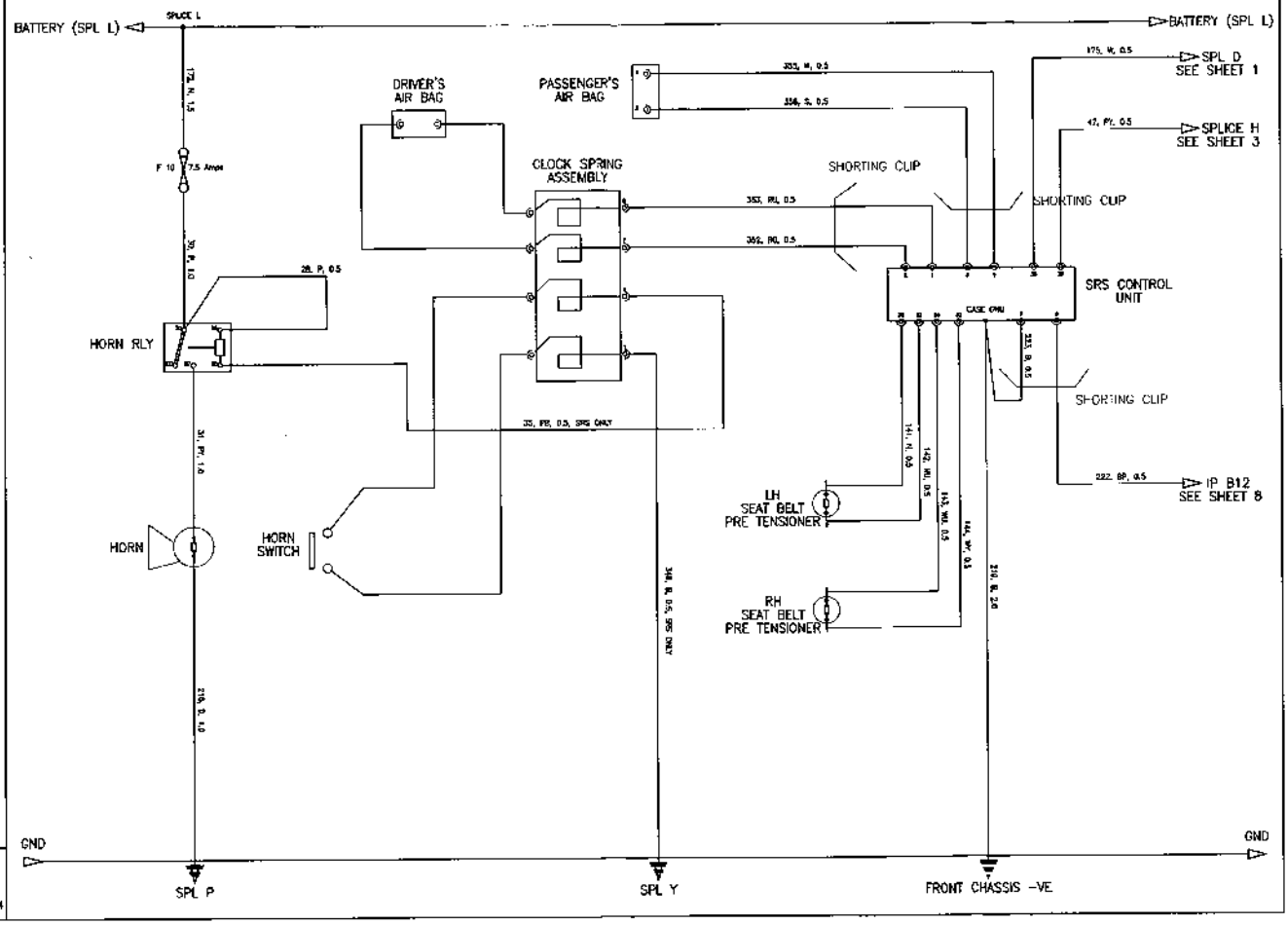

ISSUE: 3

DATE: 23/03/04

Downloaded from www.Manualslib.com manuals search engine

CDL, WINDOW LIFT AND TRACKER

ELISE NORTH AMERICA 05MY

SHEET 13

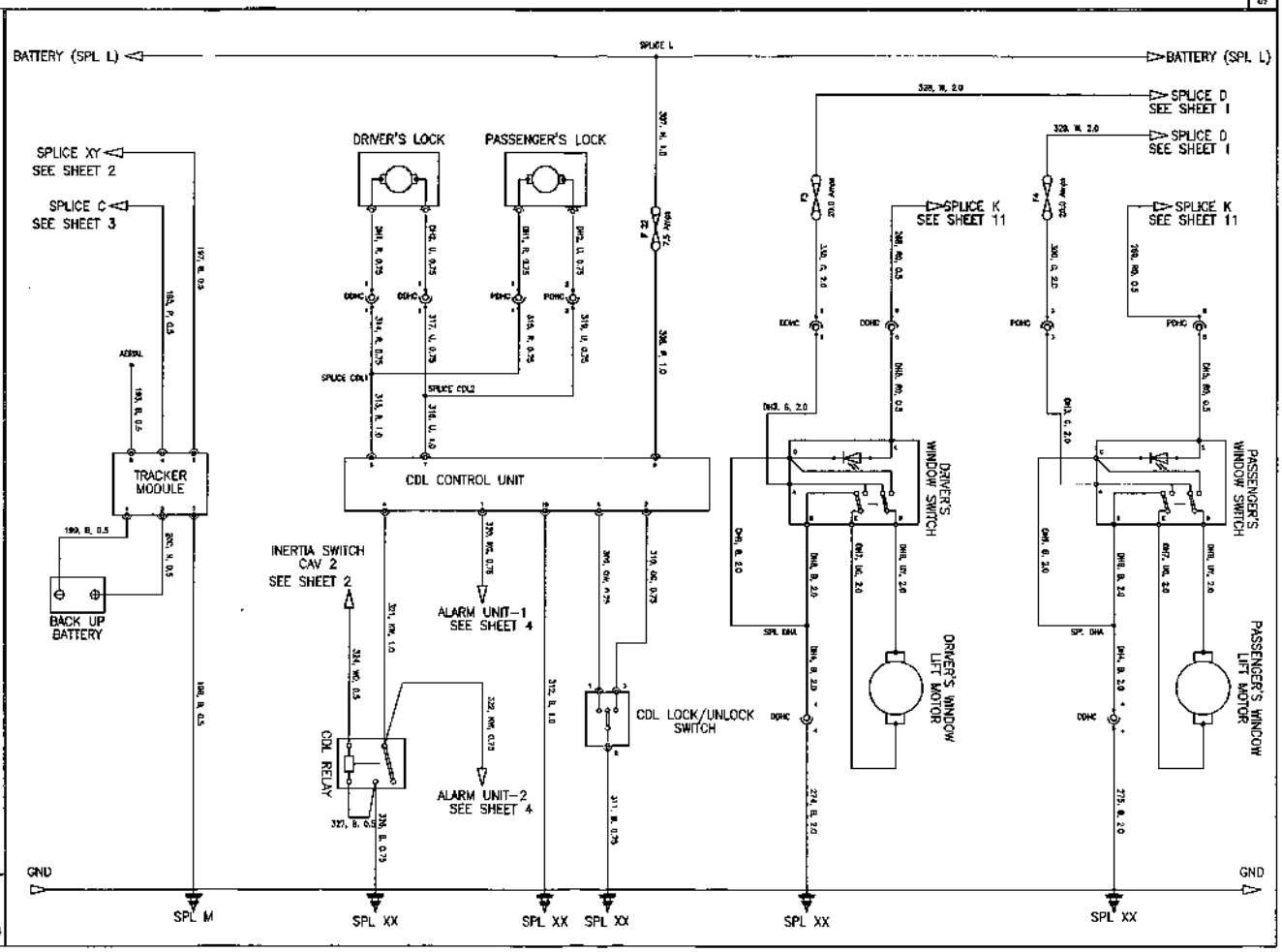

ISSUE: 3

DATE: 23/03/04

Downloaded from www.Manualslib.com manuals search engine

ABS

ELISE NORTH AMERICA 05MY

SHEET 14

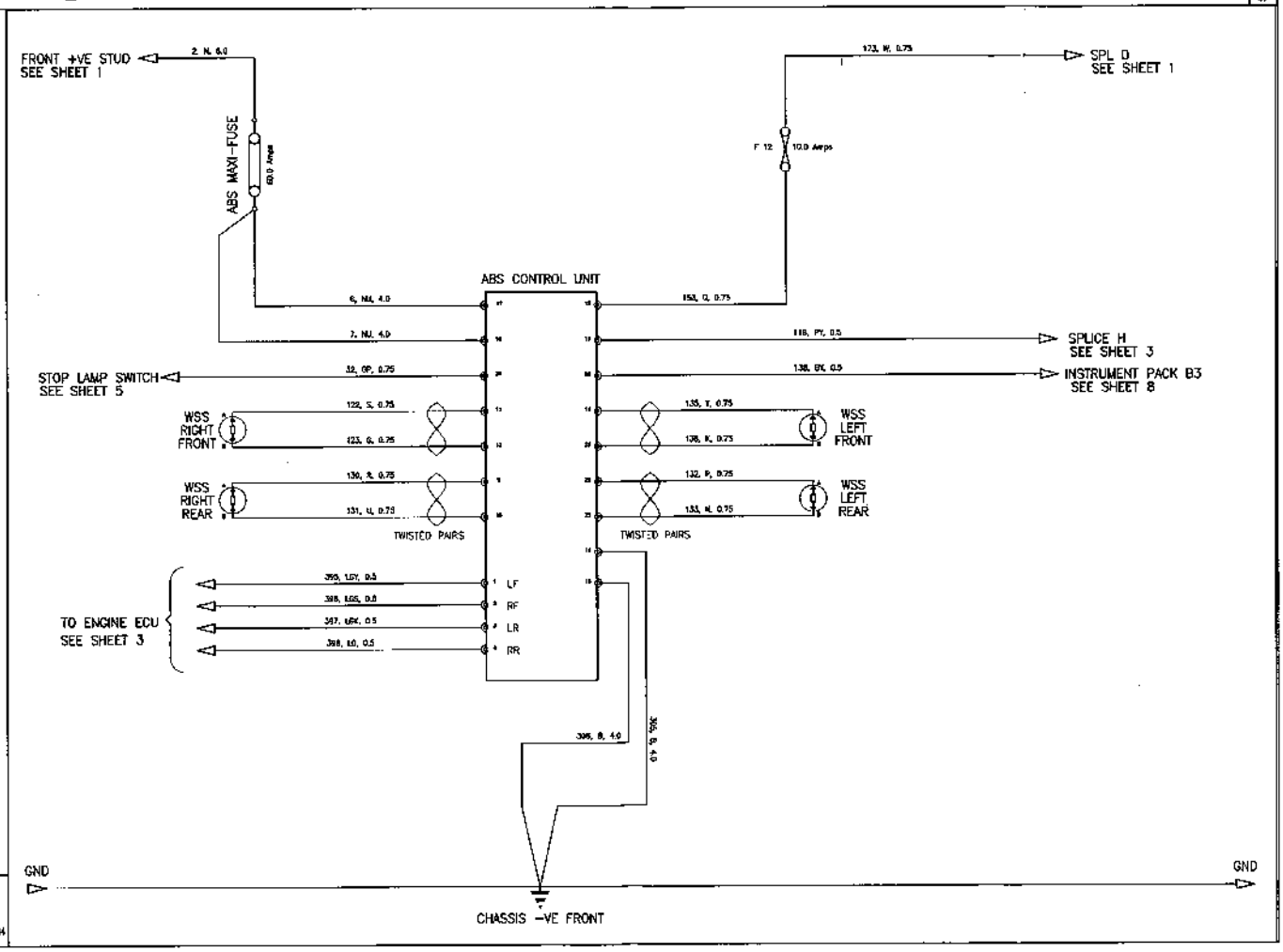

ISSUE: 3

DATE: 23/03/04

Downloaded from www.Manualslib.com manuals search engine

GROUND SPLICES

ELISE NORTH AMERICA 05MY

SHEET 15

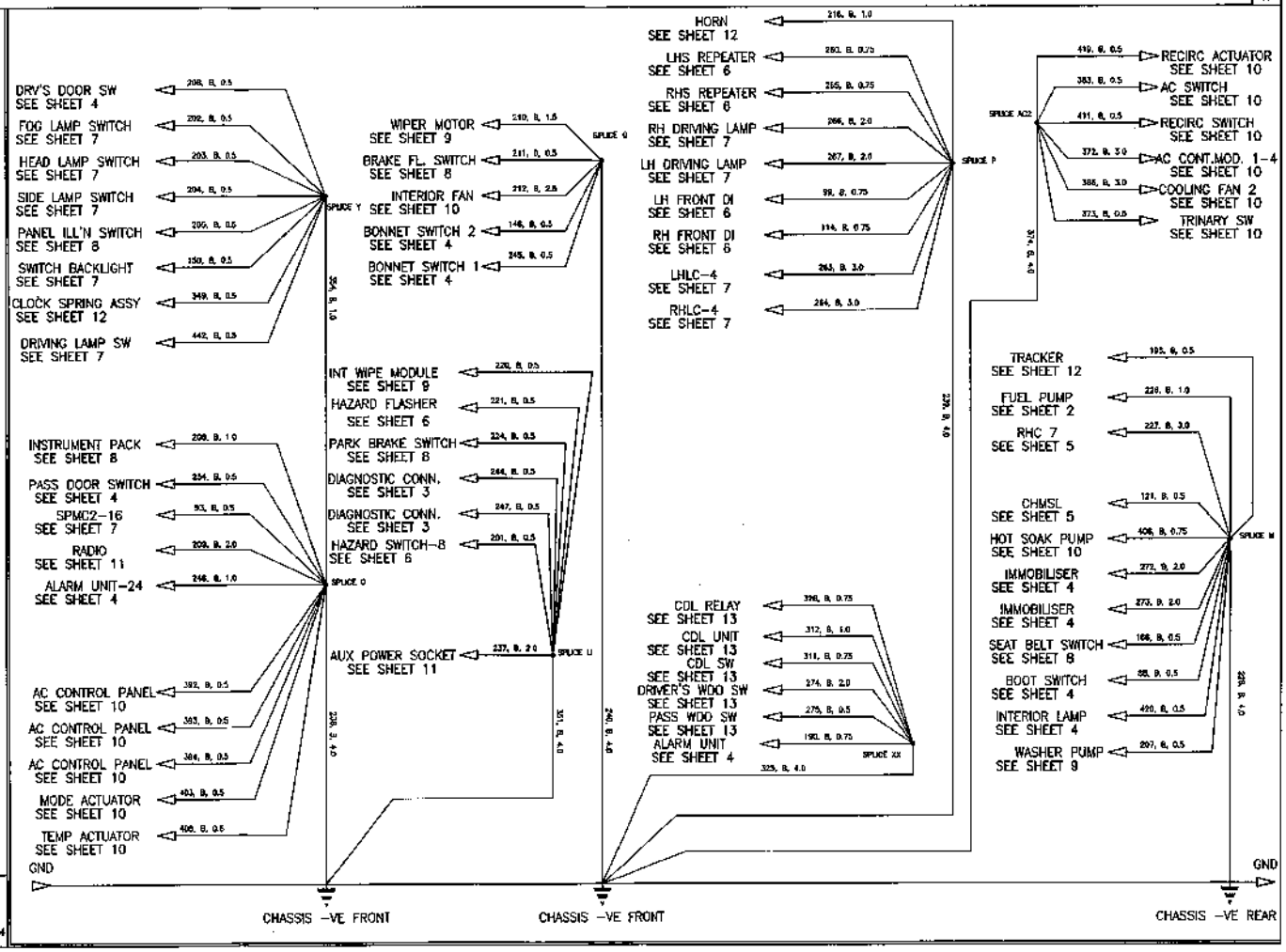

ISSUE: 3

DATE: 23/03/04

Downloaded from www.Manualslib.com manuals search engine

FUSE INFORMATION

ELISE NORTH AMERICA 05MY

SHEET 15

FUSE NO	LOCATION	FUNCTION	RATING	SUPPLY TYPE
F1	FRONT	AUXILLARY POWER SOCKET	20A	BATTERY
F2	FRONT	REVERSE LAMPS	5A	IGNITION
F3	FRONT	DRIVER'S WINDOW MOTOR	20A	IGNITION
F4	FRONT	PASSENGER'S WINDOW MOTOR	20A	IGNITION
F5	FRONT	STOP LAMPS	10A	IGNITION
F6	FRONT	DIRECTION INDICATORS	7.5A	IGNITION
F7	FRONT	IGNITION SERVICES	10A	IGNITION
F8	FRONT	BATTERY SERVICES	7.5A	BATTERY
F9	FRONT	HAZARDS	15A	BATTERY
F10	FRONT	HORN	7.5A	BATTERY
F11	FRONT	ALARM & INTERIOR LAMP	10A	BATTERY
F12	FRONT	ABS	10A	IGNITION
F13	FRONT	ECU IGNITION	3A	IGNITION
F14	FRONT	RAD FANS 1&2 SLOW / RAD FAN 1 FAST	20A	BATTERY
F15	FRONT	RADIO / SWITCH PACK MODULE	7.5A	BATTERY
F16	FRONT	SIDELAMP / REAR FOG LAMP	10A	BATTERY
F17	FRONT	LH DIP BEAM	10A	BATTERY
F18	FRONT	RH DIP BEAM	10A	BATTERY
F19	FRONT	AC COMP RLY / RAD FAN 2 FAST	20A	BATTERY
F20	FRONT	LH MAIN BEAM	15A	BATTERY
F21	FRONT	RH MAIN BEAM	15A	BATTERY
F22	FRONT	CDL	7.5A	BATTERY
C1	CABIN	INTERIOR FAN	20A	START DROP OUT
C2	CABIN	WIPER MOTOR	15A	START DROP OUT
C3	CABIN	RADIO KEY IN	7.5A	KEY IN
C4	CABIN	AC COMPRESSOR	10A	IGNITION / ECU
R1	ENGINE BAY	FUEL PUMP	20A	BATTERY
R2	ENGINE BAY	IMMOBILSER	3A	BATTERY
R3	ENGINE BAY	ALTERNATOR SENSE	5A	BATTERY
R4	ENGINE BAY	ECU B+	5A	BATTERY
R5	ENGINE BAY	02 HEATERS	5A	ECU CONTROLLED
R6	ENGINE BAY	VSV'S VVT,VVL,IAC	7.5A	ECU CONTROLLED
R7	ENGINE BAY	INJECTORS & COILS	10A	ECU CONTROLLED
R8	ENGINE BAY	HOT SOAK PUMP	5A	ECU CONTROLLED
ABS MAXI	CROSS CAR BEAM	ABS MAXI FUSE	60A	BATTERY

FRONT FUSEBOX

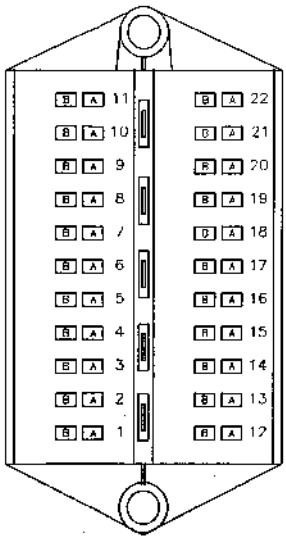

CABIN FUSES

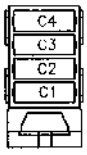

REAR FUSES

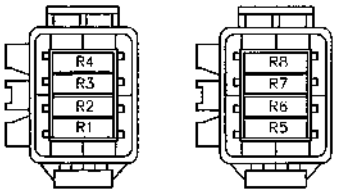

ISSUE 3

DATE: 23/03/04

Downloaded from www.Manualslib.com manuals search engine

Start Alternator & Ignition

TMC ELISE VARIANTS 06MY-

SHEET 1

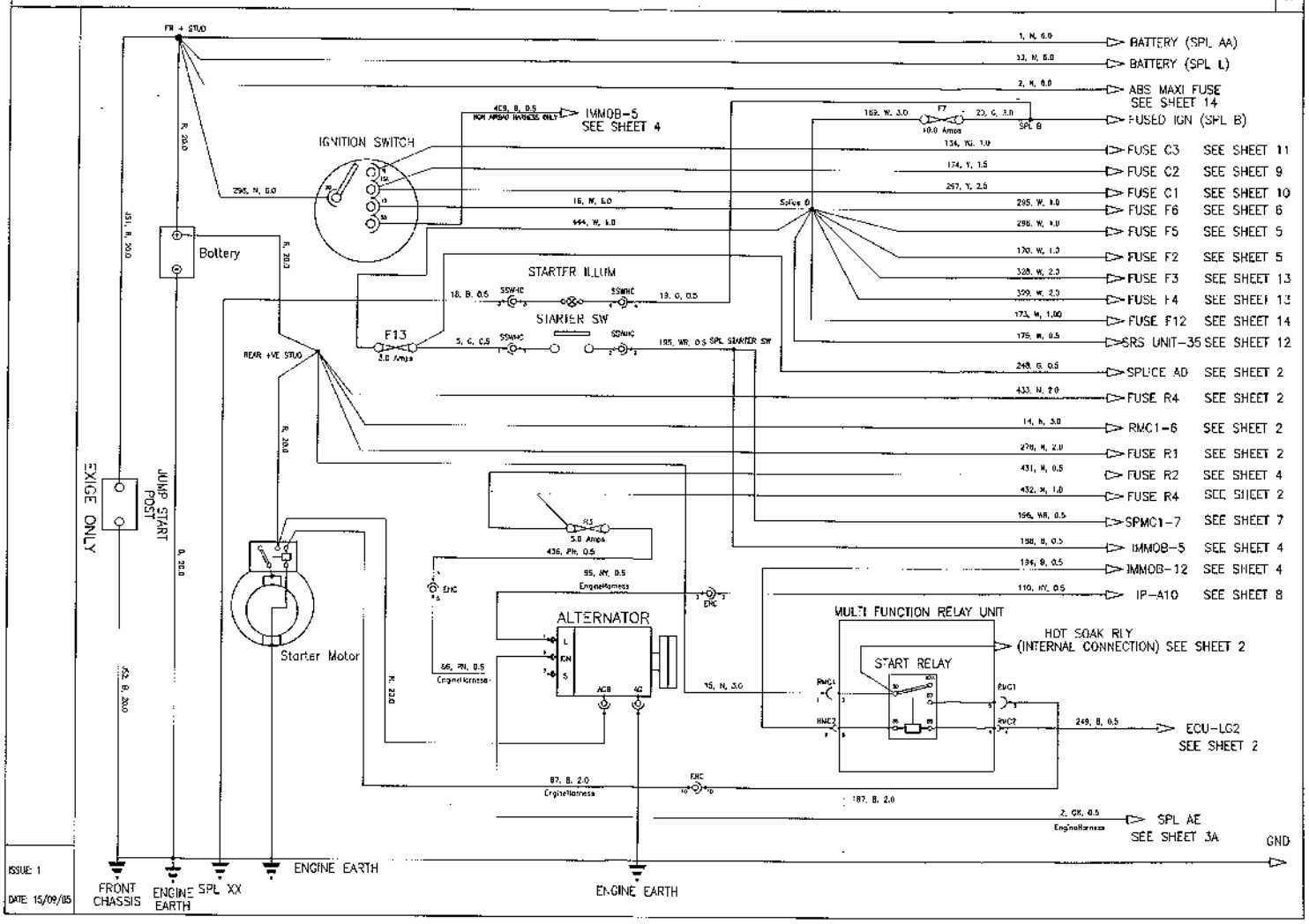

Downloaded from www.Manualslib.com manuals search engine

FUEL PUMP_ECU 1

TMC ELISE VARIANTS 06MY-

SHEET 2

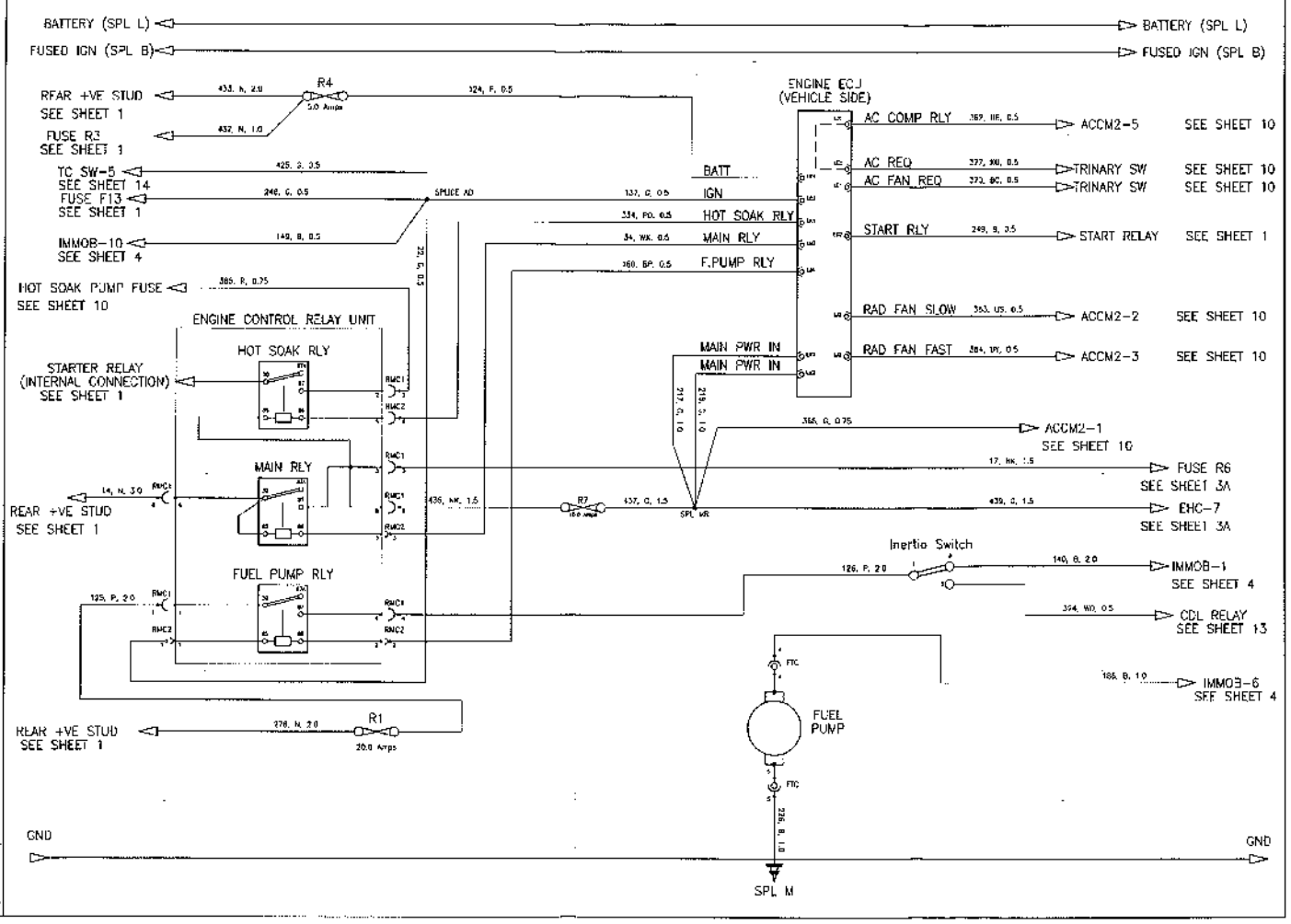

ISSUE: 1

DATE: 15/03/06

Downloaded from www.Manualslib.com manuals search engine

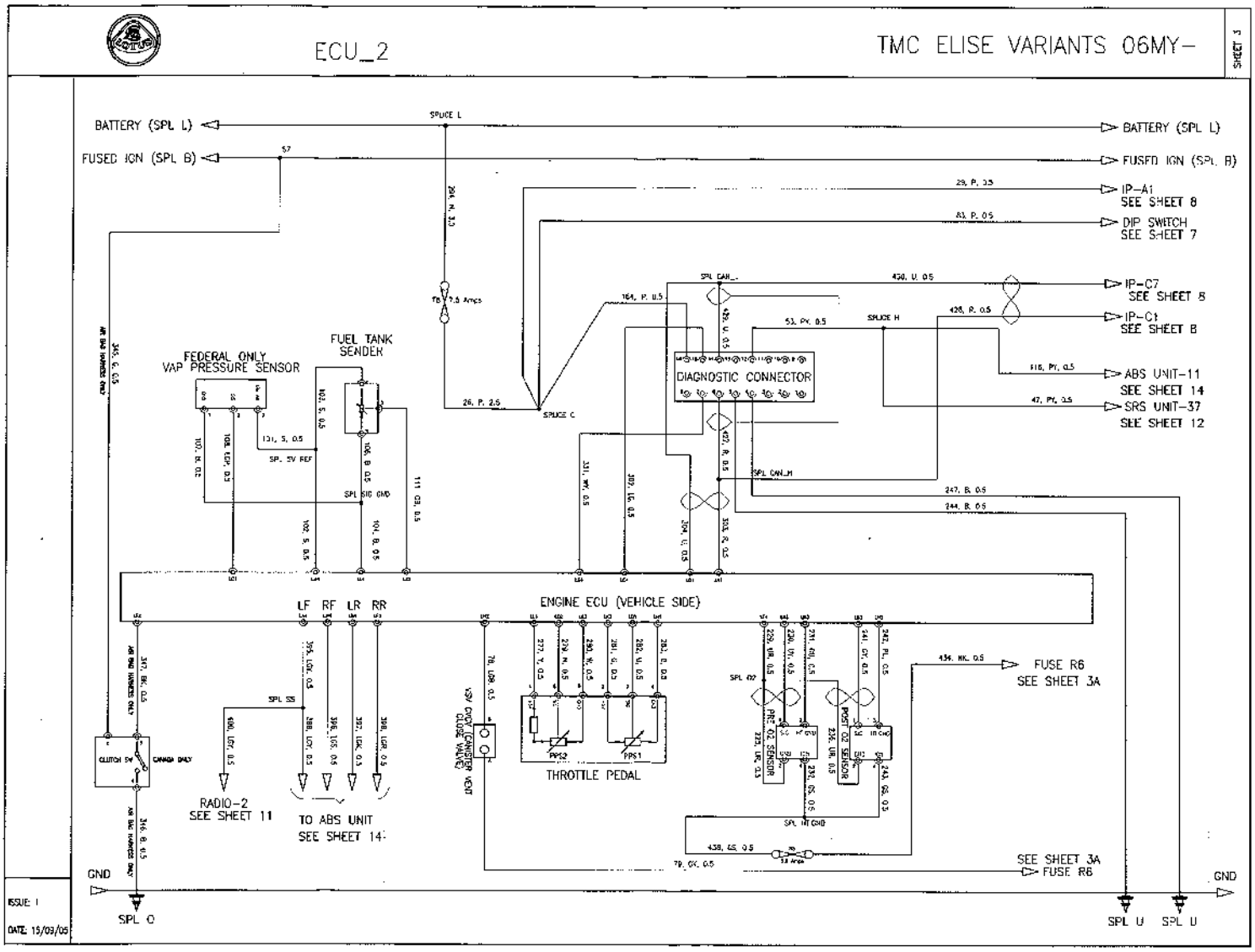

Downloaded from www.Manualslib.com manuals search engine

ECU_3

TMC ELISE VARIANTS 06MY–

SHEET 3A

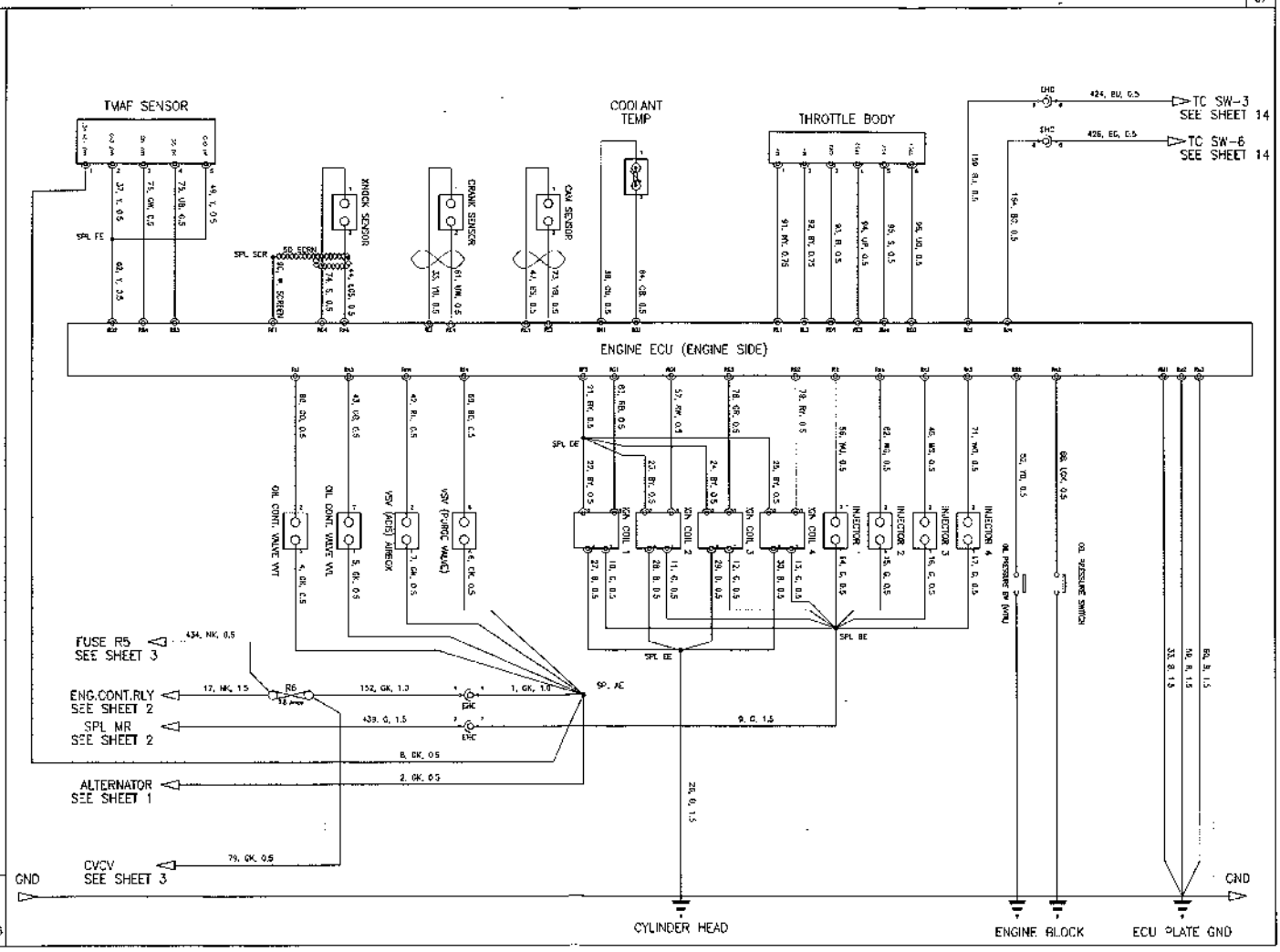

ISSUE: 1

DATE: 13/09/05

Downloaded from www.Manualslib.com manuals search engine

ALARM & INTERIOR LAMP

TMC ELISE VARIANTS 06MY–

SHEET 4

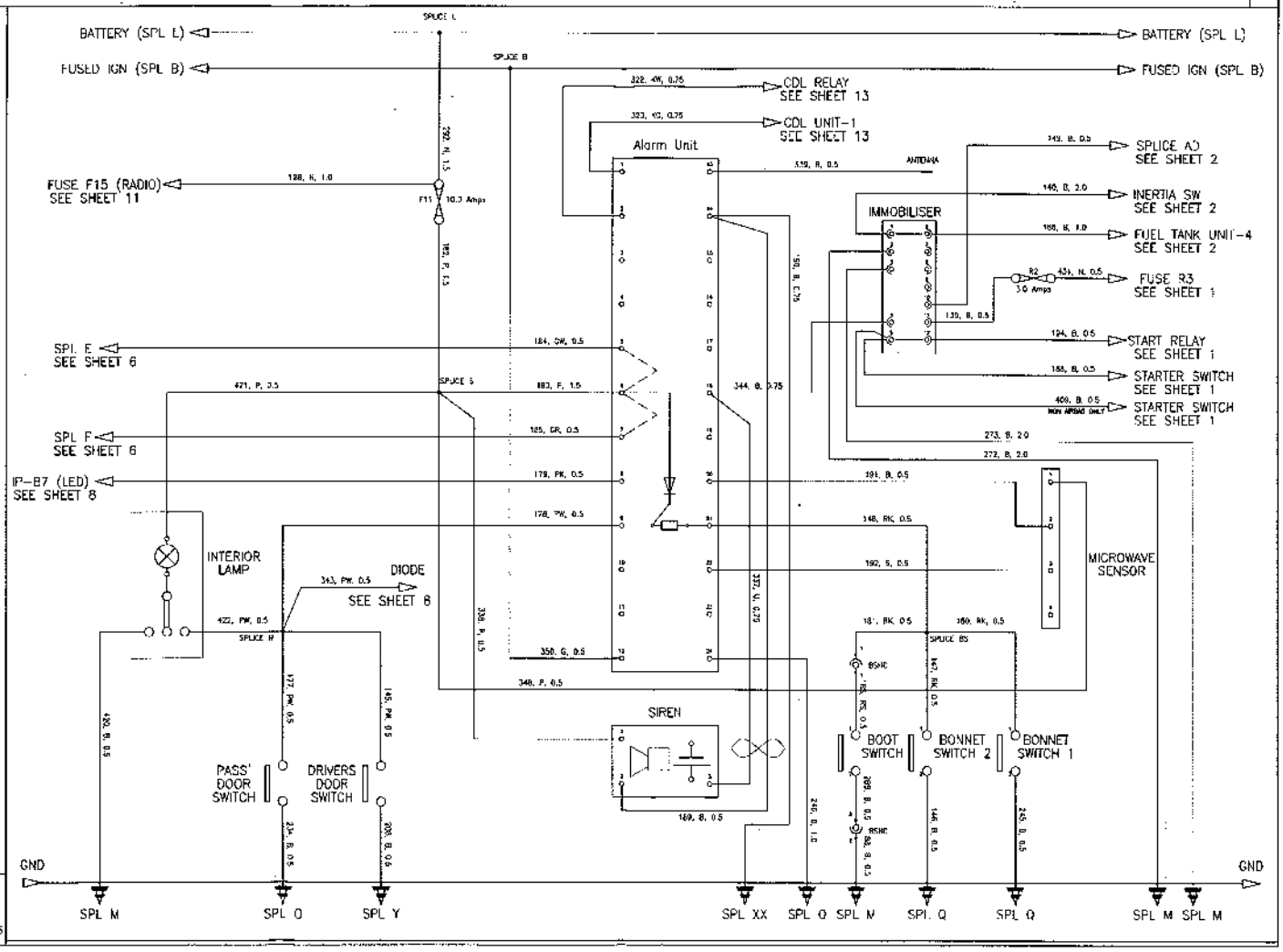

ISSUE: 1

DATE: 15/09/05

Downloaded from www.Manualslib.com manuals search engine

STOP & REVERSE LAMPS

TMC ELISE VARIANTS 06MY–

SHEET 5

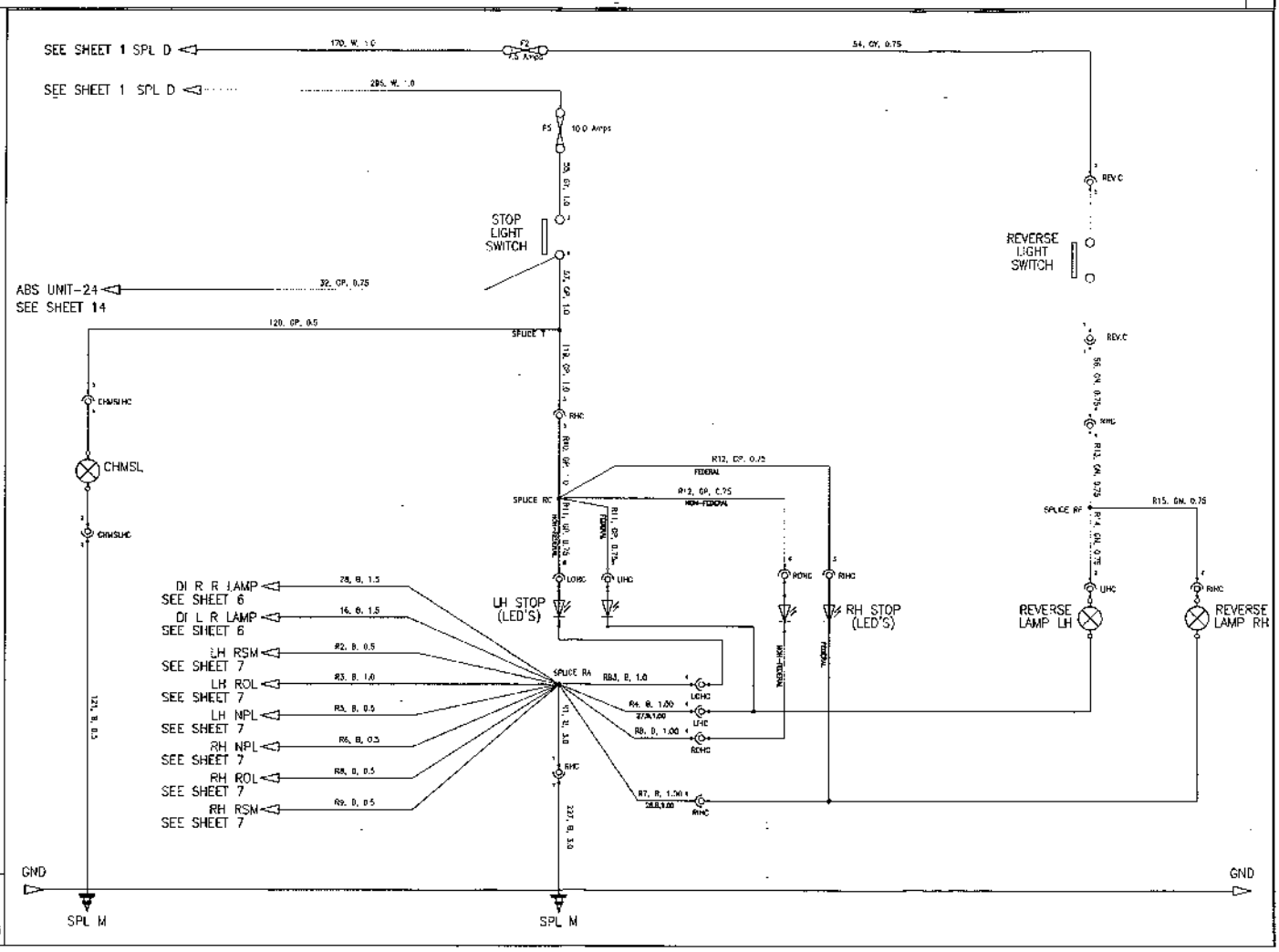

ISSUE 1

DATE: 15/09/05

Downloaded from www.Manualslib.com manuals search engine

D.I. & HAZARD WARNING LIGHTS

TMC ELISE VARIANTS 06MY–

SHEET 6

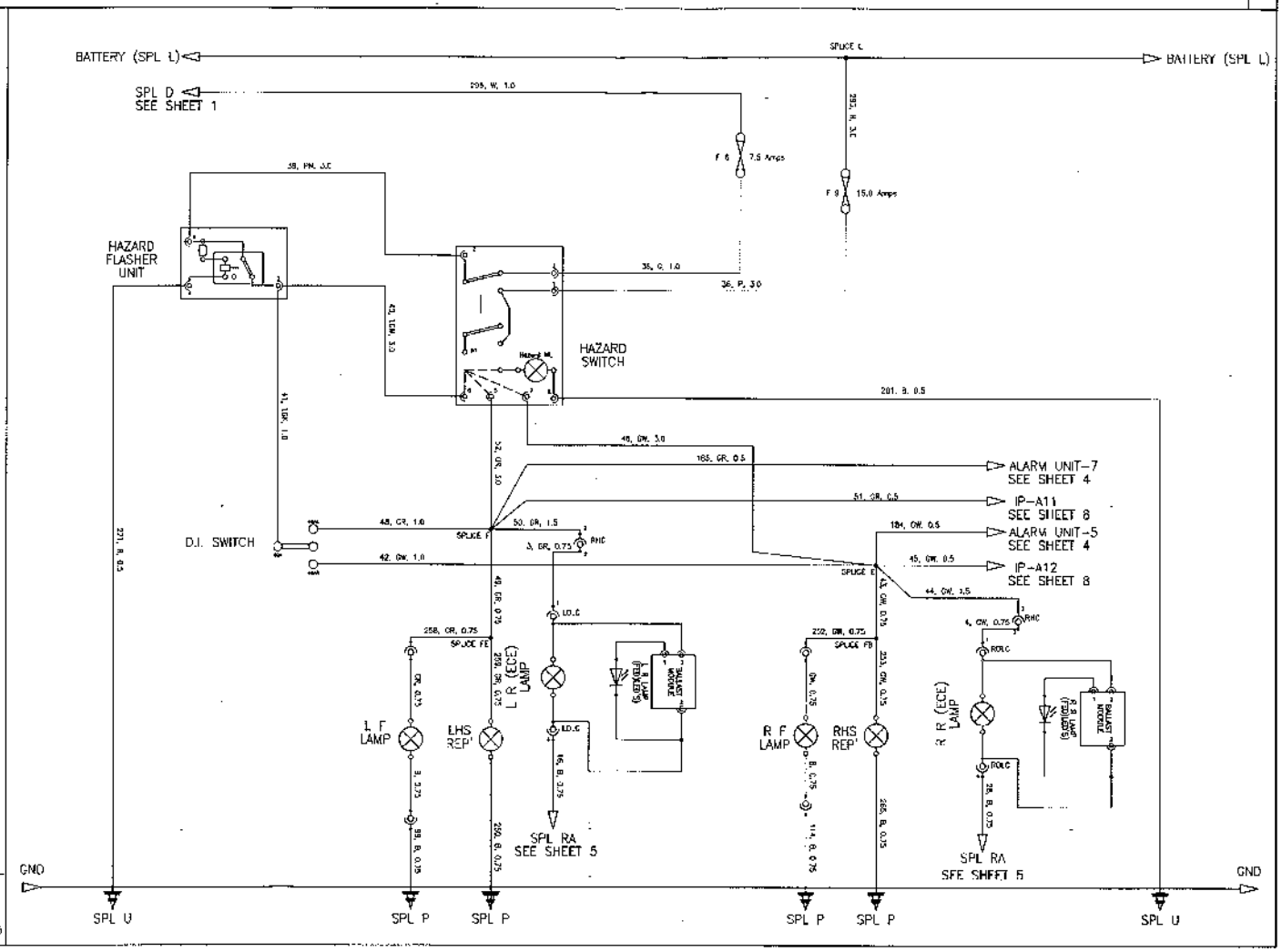

Downloaded from www.Manualslib.com manuals search engine

HEAD/ SIDE & AUXILIARY DRIVING LAMPS

TMC ELISE VARIANTS 06MY–

SHEET 7

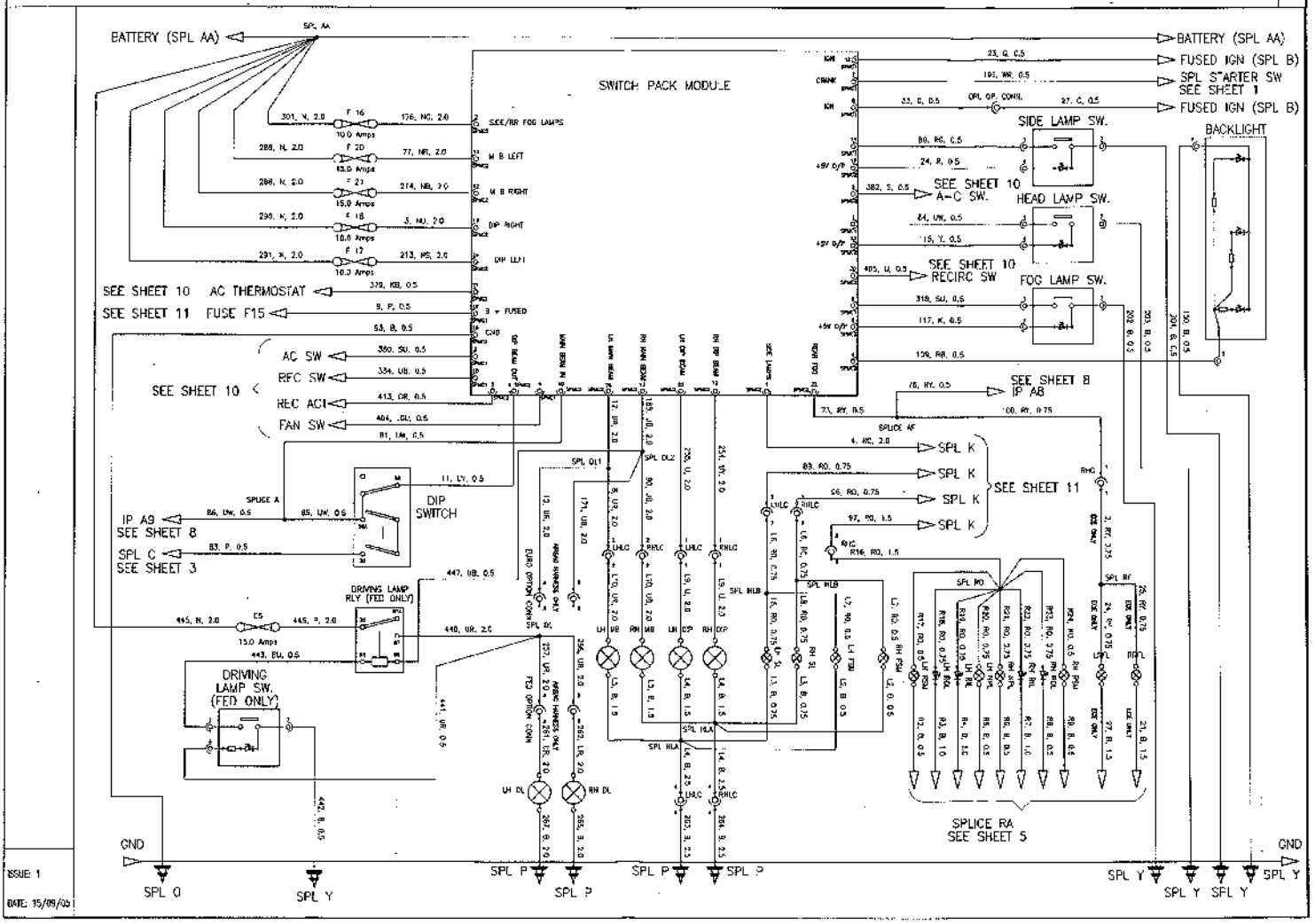

ISSUE 1

DATE: 15/09/05

Downloaded from www.Manualslib.com manuals search engine

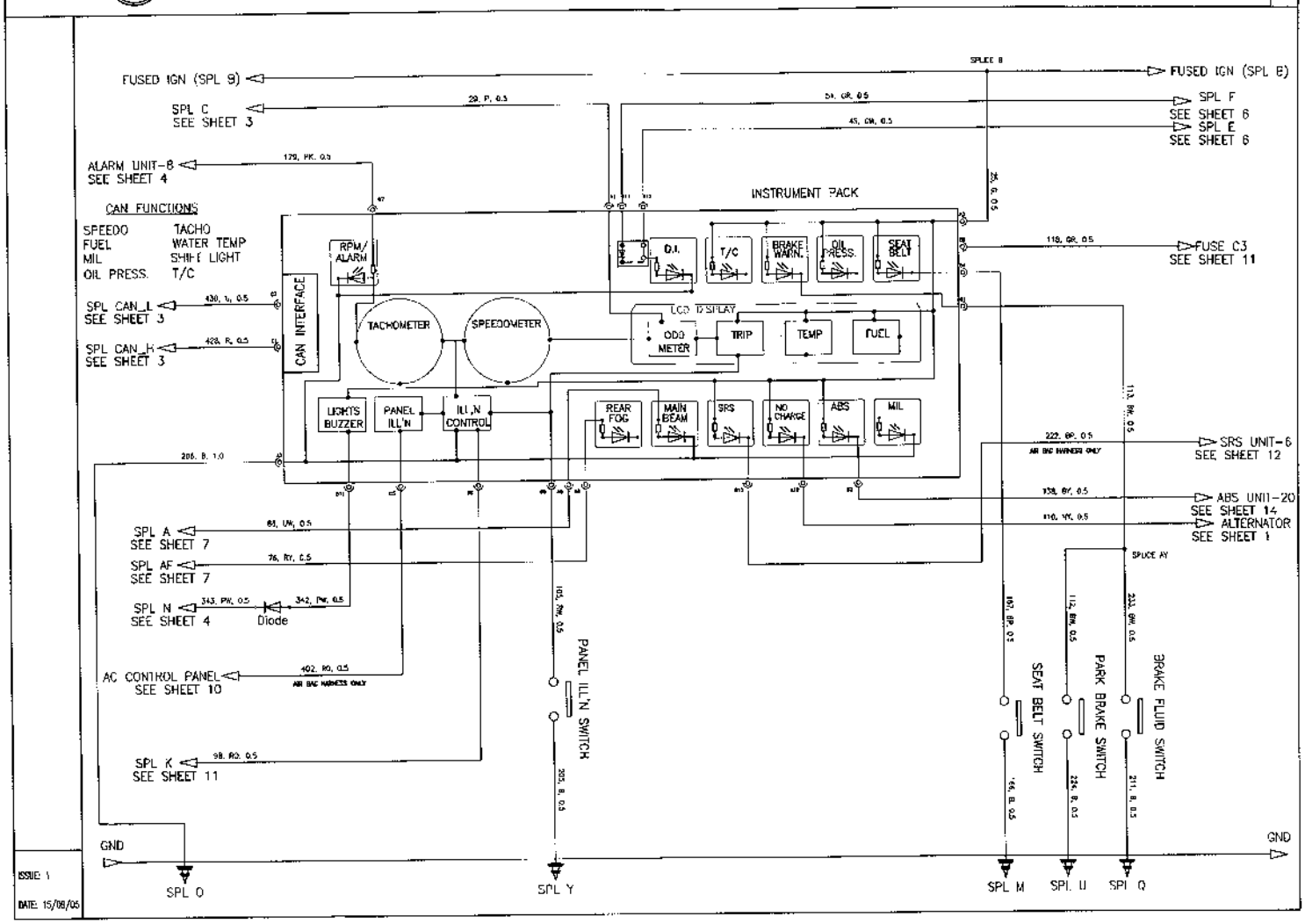

ISSUE: 1

DATE: 15/08/05

Downloaded from www.Manualslib.com manuals search engine

WIPER AND WASHER

TMC ELISE VARIANTS 06MY–

SHEET 9

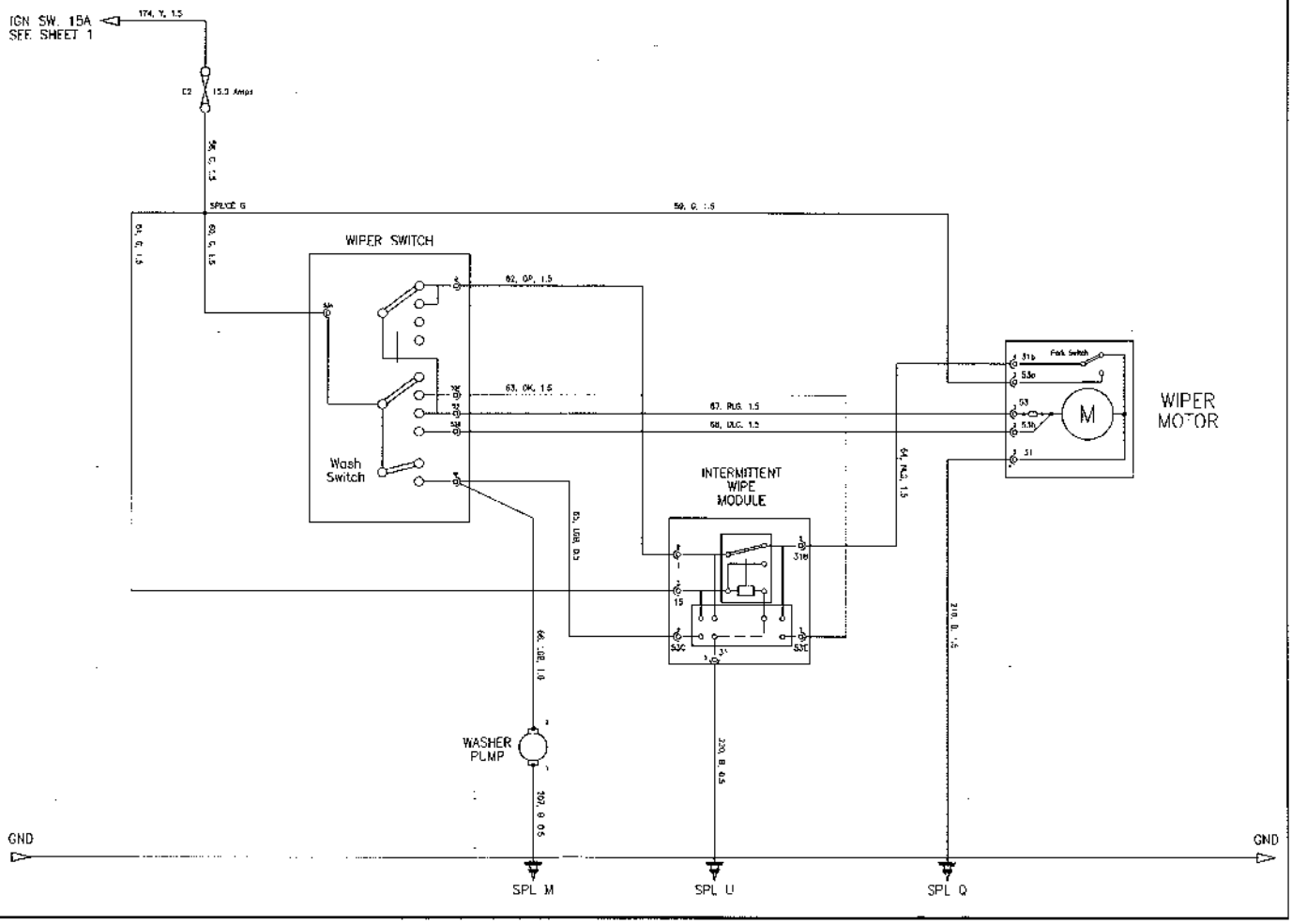

ISSUE: 1

DATE: 15/09/06

Downloaded from www.Manualslib.com manuals search engine

INTERIOR FAN, RAD FANS AND AIR CONDITIONING (OPT)

TMC ELISE VARIANTS 06MY–

SHEET 10

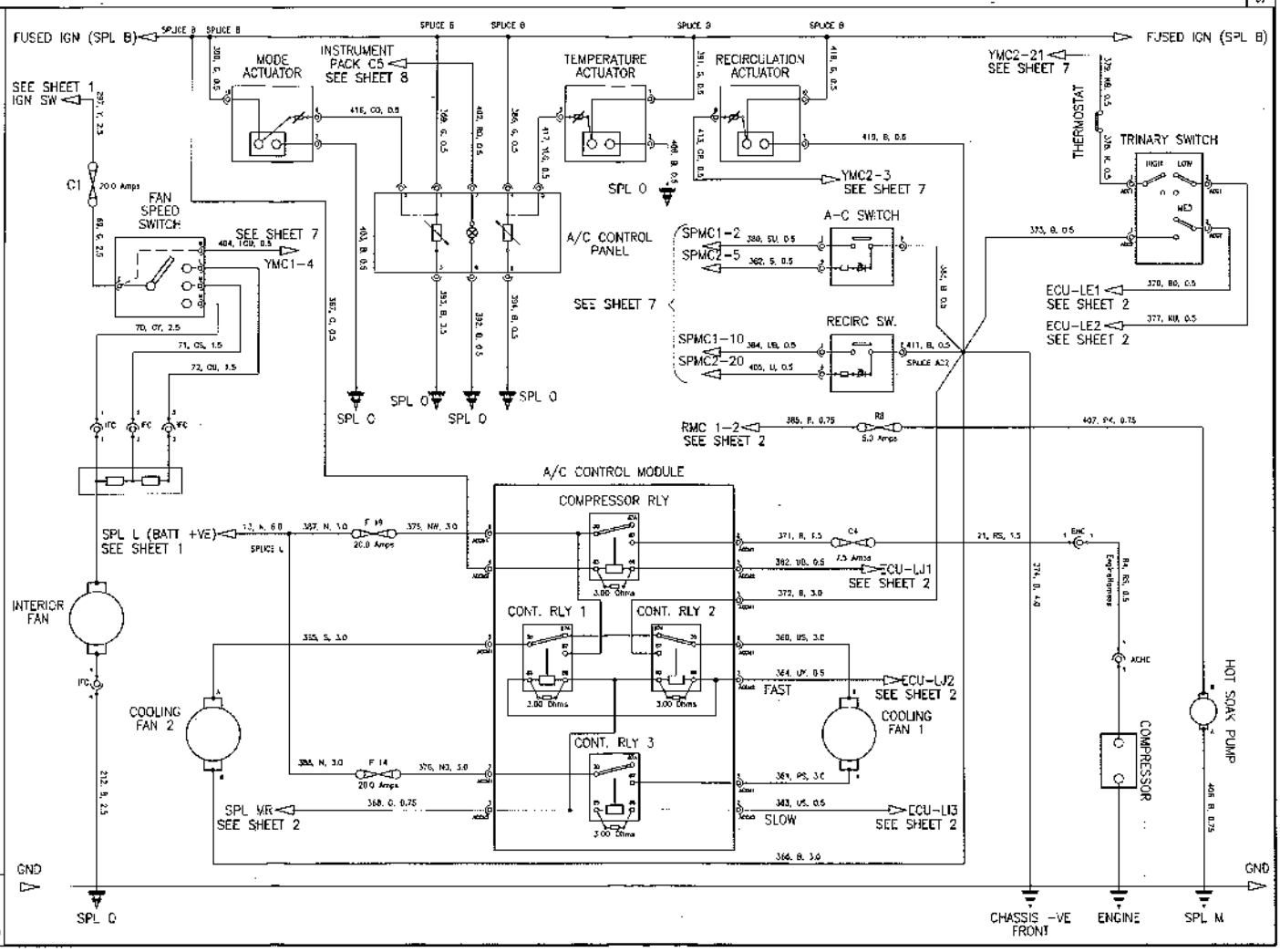

ISSUE: 1

DATE: 15/09/05

Downloaded from www.Manualslib.com manuals search engine

RADIO & AUX. POWER SOCKET

TMC ELISE VARIANTS 06MY–

SHEET 11

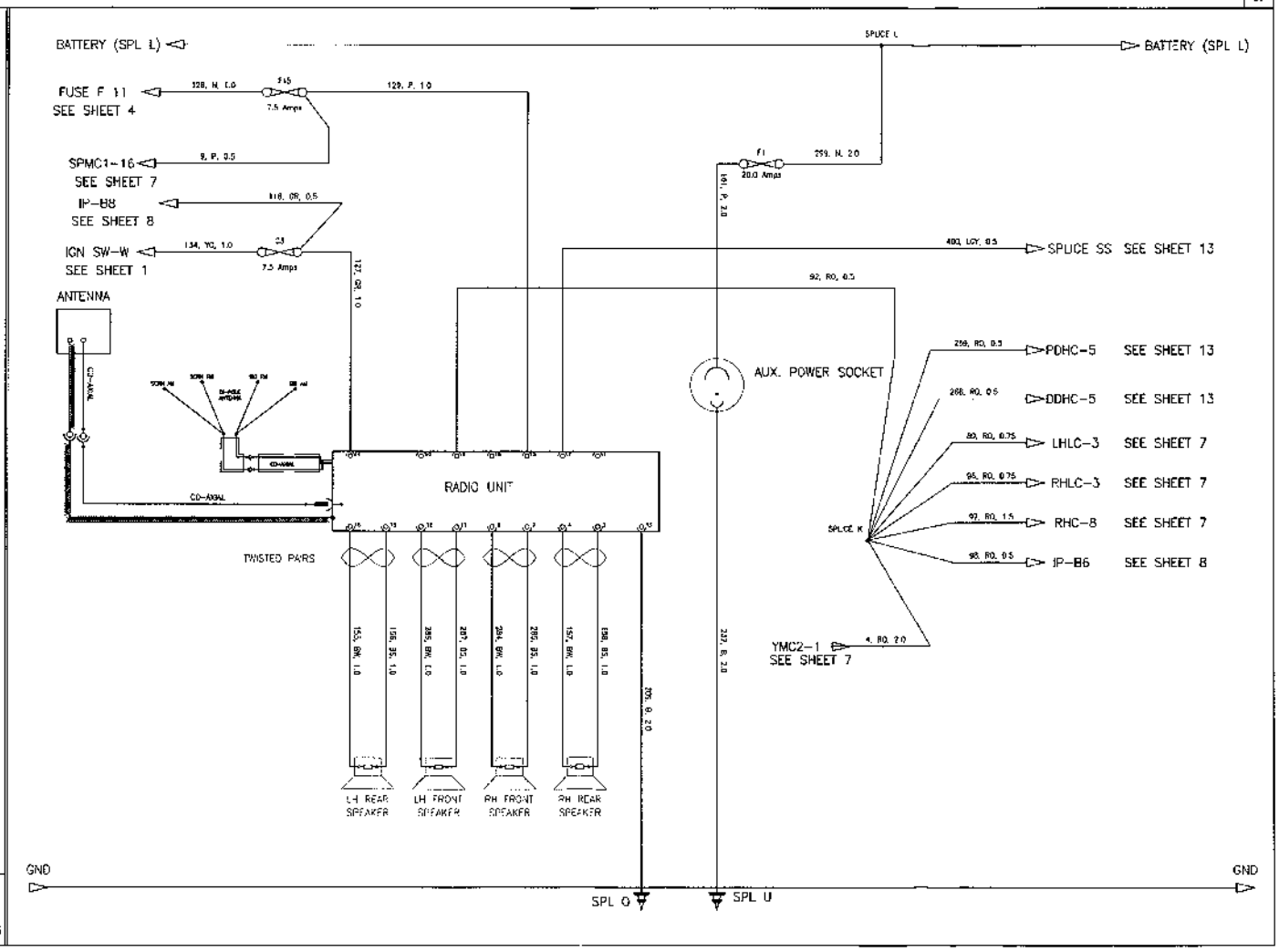

ISSUE: 1

DATE: 15/09/05

Downloaded from www.Manualslib.com manuals search engine

HORN AND AIR BAG

TMC ELISE VARIANTS 06MY-

SHEET 12

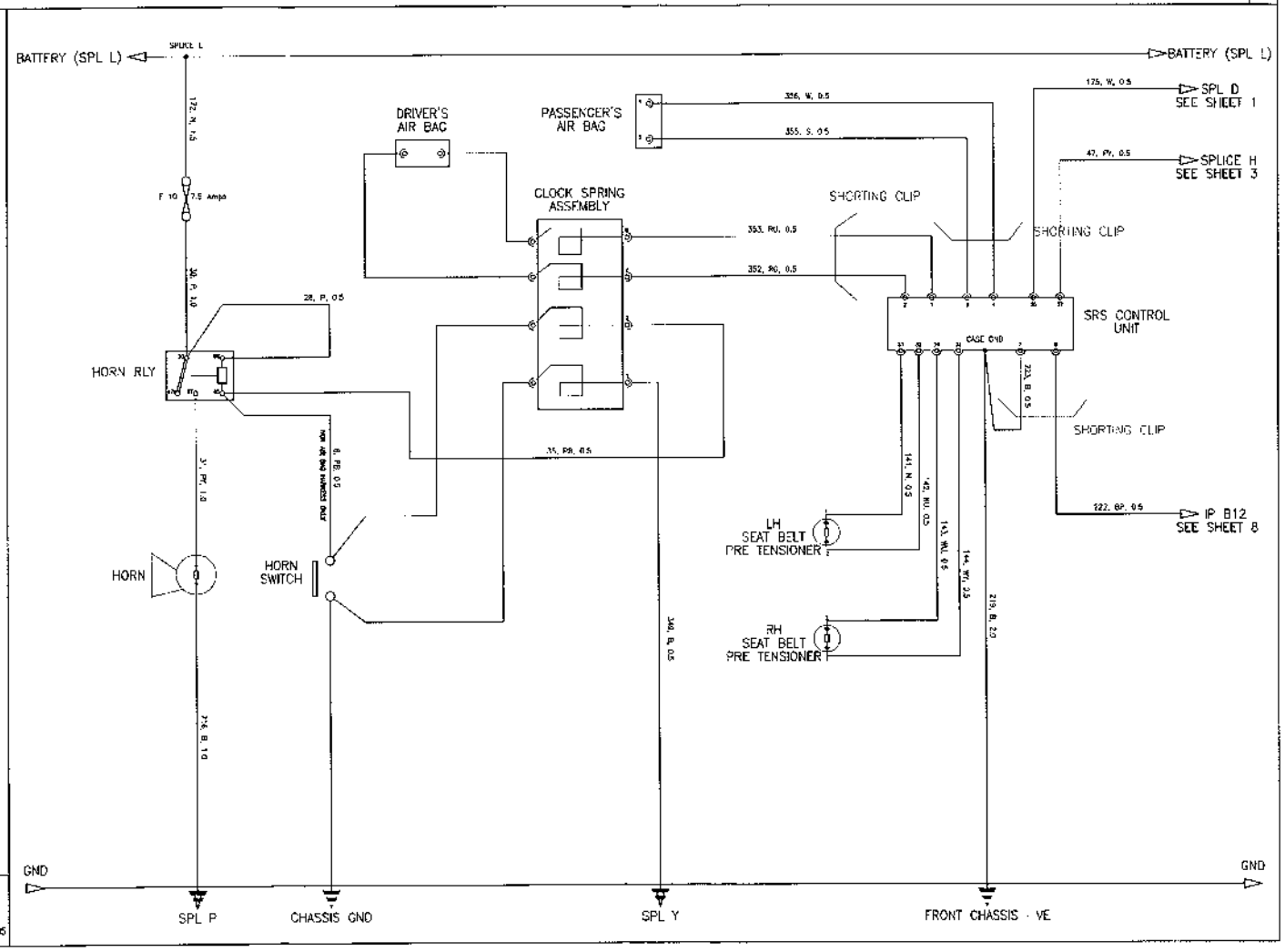

ISSUE: 1

DATE: 15/09/05

Downloaded from www.Manualslib.com manuals search engine

CDL, WINDOW LIFT AND TRACKER

TMC ELISE VARIANTS 06MY–

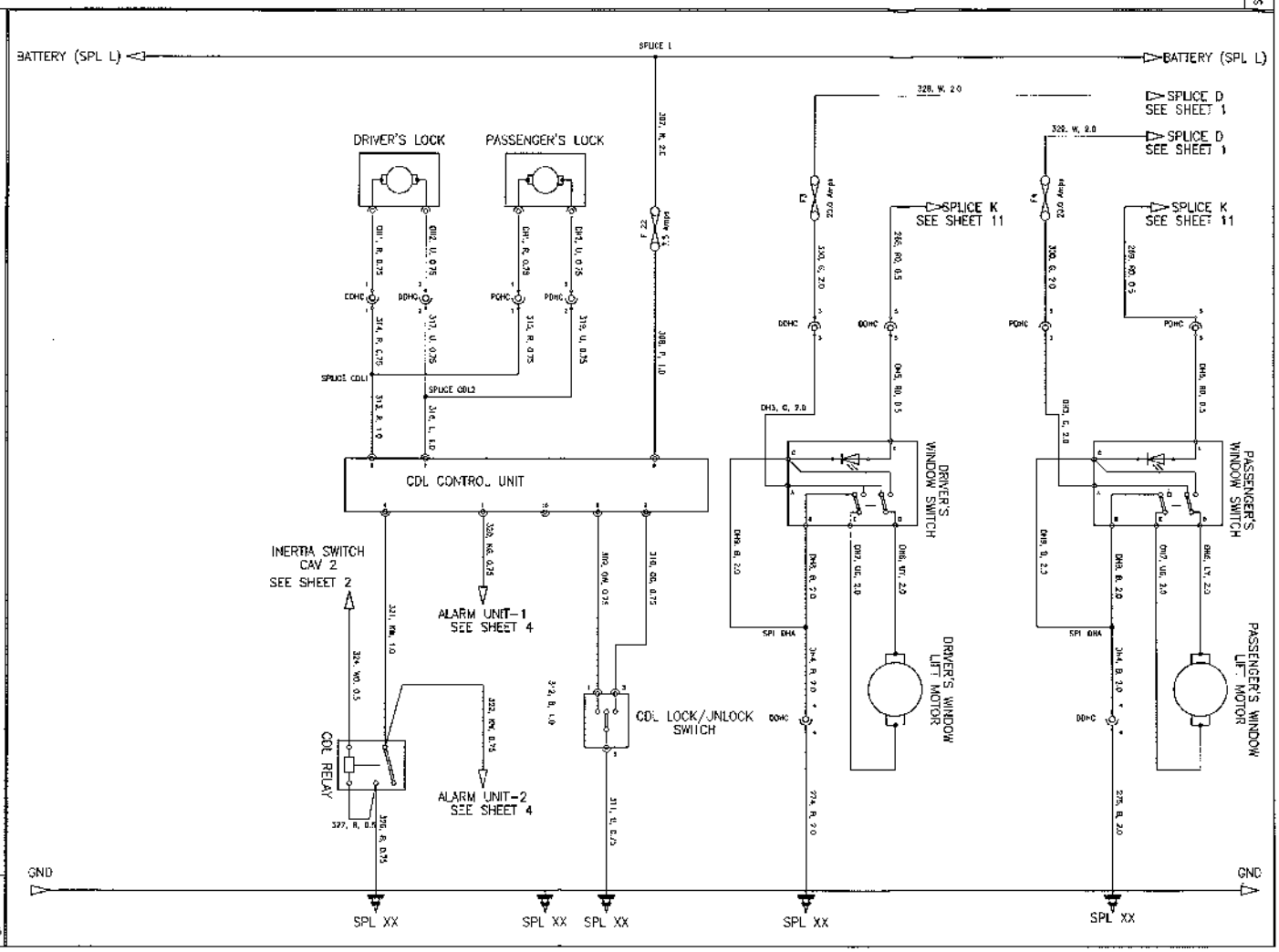

ISSUE: 1

DATE: 15/09/05

Downloaded from www.Manualslib.com manuals search engine

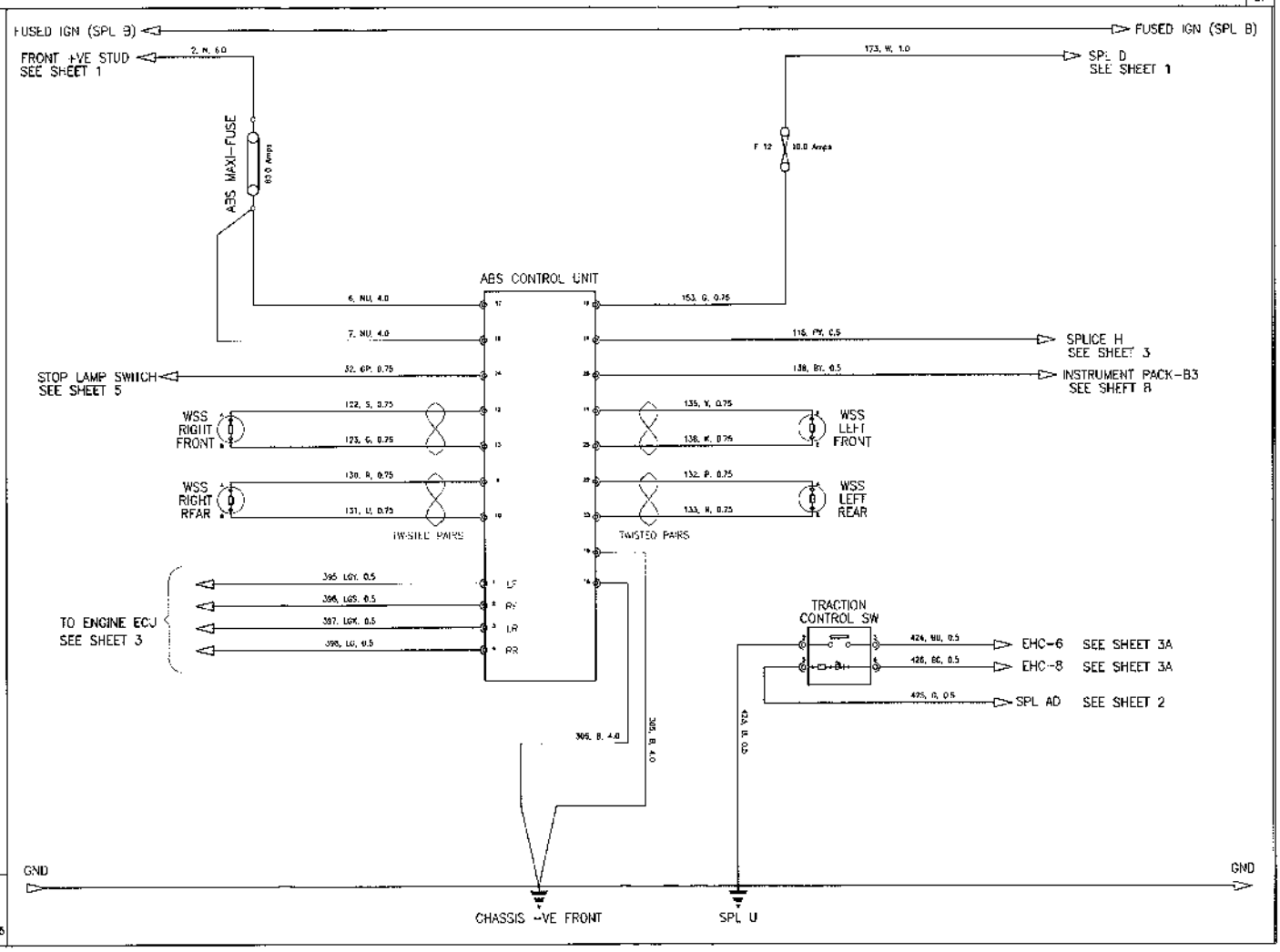

ISSUE: 1

DATE: 15/09/05

Downloaded from www.Manualslib.com manuals search engine

GROUND SPLICES

TMC ELISE VARIANTS 06MY–

SHEET 15

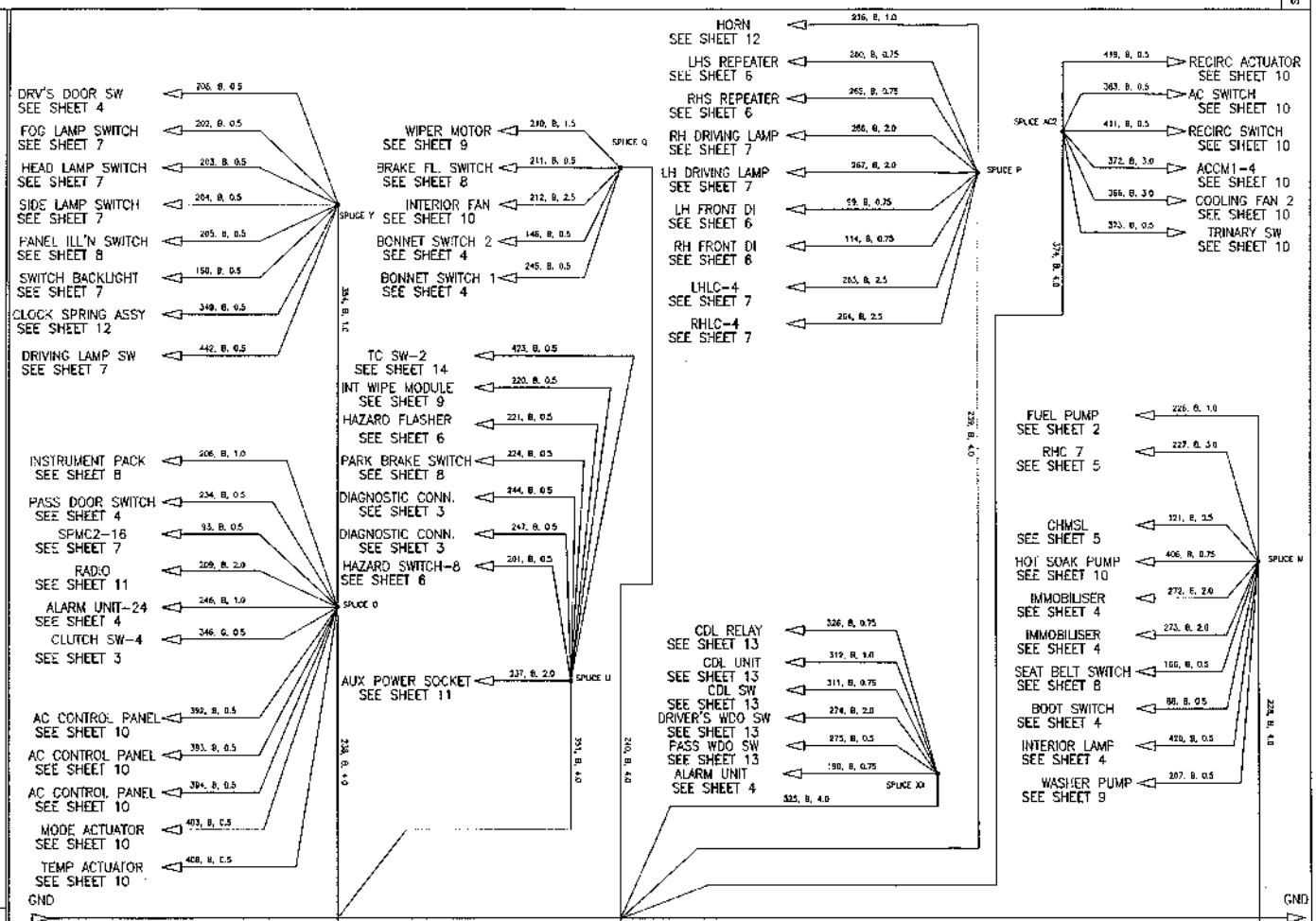

ISSUE: 1

DATE: 15/09/05

Downloaded from www.Manualslib.com manuals search engine

FUSE INFORMATION

TMC ELISE VARIANTS 06MY–

SHEET 15

FUSE NO	LOCATION	FUNCTION	RATING	SUPPLY TYPE
F1	FRONT	AUXILLARY POWER SOCKET	20A	BATTERY
F2	FRONT	REVERSE LAMPS	5A	IGNITION
F3	FRONT	DRIVER'S WINDOW MOTOR	20A	IGNITION
F4	FRONT	PASSENGER'S WINDOW MOTOR	20A	IGNITION
F5	FRONT	STOP LAMPS	10A	IGNITION
F6	FRONT	DIRECTION INDICATORS	7.5A	IGNITION
F7	FRONT	IGNITION SERVICES	10A	IGNITION
F8	FRONT	BATTERY SERVICES	7.5A	BATTERY
F9	FRONT	HAZARDS	15A	BATTERY
F10	FRONT	HORN	7.5A	BATTERY
F11	FRONT	ALARM & INTERIOR LAMP	10A	BATTERY
F12	FRONT	ABS	10A	IGNITION
F13	FRONT	ECU / STARTER SW / IMMOBILSER	3A	IGNITION
F14	FRONT	RAD FANS 1&2 SLOW / RAD FAN 1 FAST	20A	BATTERY
F15	FRONT	RADIO / SWITCH PACK MODULE	7.5A	BATTERY
F16	FRONT	SIDELAMP / REAR FOG LAMP	10A	BATTERY
F17	FRONT	LH DIP BEAM	10A	BATTERY
F18	FRONT	RH DIP BEAM	10A	BATTERY
F19	FRONT	AC COMP RLY / RAD FAN 2 FAST	20A	BATTERY
F20	FRONT	LH MAIN BEAM	15A	BATTERY
F21	FRONT	RH MAIN BEAM	15A	BATTERY
F22	FRONT	CDL	7.5A	BATTERY
C1	CABIN	INTERIOR FAN	20A	START DROP OUT
C2	CABIN	WIPER MOTOR	15A	START DROP OUT
C3	CABIN	RADIO KEY IN	7.5A	KEY IN
C4	CABIN	AC COMPRESSOR	7.5A	IGNITION
C5	CABIN	AUXILLARY DRIVING LAMPS	15A	BATTERY
R1	ENGINE BAY	FUEL PUMP	20A	BATTERY
R2	ENGINE BAY	IMMOBILSER	3A	BATTERY
R3	ENGINE BAY	ALTERNATOR SENSE	5A	BATTERY
R4	ENGINE BAY	ECU B+	5A	BATTERY
R5	ENGINE BAY	O2 HEATERS	5A	ECU CONTROLLED
R6	ENGINE BAY	VSV'S VVT,VVL,IAC	7.5A	ECU CONTROLLED
R7	ENGINE BAY	INJ'S & COILS / ECU MAIN PWR / AC MOD	10A	ECU CONTROLLED
R8	ENGINE BAY	HOT SOAK PUMP	5A	ECU CONTROLLED
M1	CROSS CAR BEAM	ABS MAIN POWER	60A	BATTERY

FRONT FUSEBOX

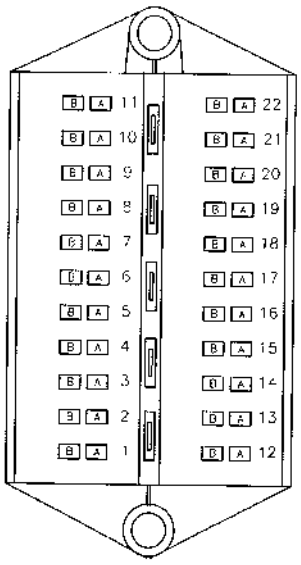

CABIN FUSES

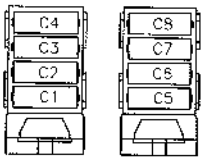

REAR FUSES

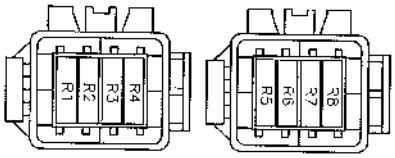

ISSUE: 1

DATE: 15/09/05

Downloaded from www.Manualslib.com manuals search engine

MAINTENANCE & LUBRICATION

SECTION OI

		Page
Recommended Lubricants		2
Maintenance Schedule	- Elise 111R & '04 Exige (non-USA)	3
	- Elise/Exige North America	6
Pre-Delivery Inspection		12
Body Paint Inspection	- Elise	14
	- Exige	15
Licence Plate Fitment		16

sn_oi_cyclone.indd 1 03/03/2006 11:24:16
Downloaded from www.Manualslib.com manuals search engine

RECOMMENDED LUBRICANTS

Engine

In order to ensure the longevity and reliability of the vehicle, it is most important that **only the specified lubricants** are used. It is an entirely false economy to try to save money by using lower quality oils, which may break down before the next change interval and provide inadequate protection before the end of the term. High oil consumption may also result.

For topping up purposes during the running-in period prior to the First After Sales Service, a top quality mineral or semi-synthetic 5W/40 oil should be used. At the First After Sales Service and completion of the running-in period, a fully synthetic 5W/40 oil such as Texaco Havoline Synthetic should be used. This oil has been tested in all climatic conditions likely to be encountered, and offers advantages in ease of cranking, smooth cold running and fuel economy at low temperatures, in combination with good wear protection at elevated temperatures and at high engine speeds. If Texaco/Havoline products are not available, an oil meeting the following specification should be used. Note that Lotus does not recommend the use of any oil additives:

Viscosity:	5W/40
Quality Standard:	API SL/CF, SJ/CF; ACEA A3
Capacity - refill inc. filter	4.4 litre (cars fitted with front mounted oil coolers contain an additional 3.5 litres, but this oil is not drained during routine servicing)
Difference between high & Low dipstick marks	1.5 litre
Oil change interval	Refer to Maintenance Schedule

Transmission (gearbox & final drive)

Viscosity	SAE 75W/90
Quality Standard	API GL-4 or GL-5
Capacity	2.3 litre (2.4 US qt)
Oil change interval	Refer to Maintenance Schedule

Brake & Clutch System

Type	Non-mineral (non-petroleum) hydraulic fluid
Specification	DOT 4
Capacity - brake	1.5 litre
- clutch	0.5 litre
Fluid change interval	12 months

Engine Coolant Additive

Only approved product	Havoline XLC
Type	Ethylene glycol antifreeze with OAT corrosion inhibitors
Colour	Orange
Concentration	50%
Quantity reqd. @ 50%	6 litres
Coolant change interval	4 years

sn_oi_cyclone.indd 2 03/03/2006 11:24:16
Downloaded from www.Manualslib.com manuals search engine

MAINTENANCE SCHEDULE - ELISE 111R & EXIGE 2004 M.Y. Onwards (Non-USA) LSL460a

Job no.: ..... Owner's name: .....……..... Vehicle: .....……..……..

Vehicle registration no.: .....……..... V.I.N.: .....…….....…

Recorded mileage: .....……...……..…… Mileage at last service.: .....……

Today's date: ……..……...…… Date of last service: ……

EXPLANATORY NOTES:

Required Maintenance
In order to maintain warranty validation and help ensure proper safety, emissions performance and dependability of the vehicle, Lotus Cars Ltd. requires that the vehicle be serviced in accordance with this schedule. Each service should be performed within 9,000 miles (15,000 km) or 12 months of the previous service, whichever first occurs. Any necessary repairs should be completed without delay.
A cross (X) in the following table indicates an operation to be performed. The corresponding box should be ticked when the operation has been satisfactorily performed, or the X circled if extra work and time is required. The approval of the customer should be obtained before any extra work is undertaken, details of which should be recorded in the space provided at the end of the schedule.

'Inspect' means assess condition and test for correct operation. Extra time is required to adjust or repair - advise customer beforehand if necessary.

'Check' means test and adjust/fill or tighten as necessary. Labour time is included.

Special Operating Conditions
If the car is subjected to one of the following 'special operating conditions', additional servicing is required:
- Regular use on unpaved or dusty roads (1,2)
- Use in mountainous areas with severe or prolonged brake usage (3)
- Frequent short trips with cold engine (esp. in cold weather/climates); and/or frequent or prolonged idling (1)
- Occasional circuit use, with repeated high rpm, wide throttle openings and high oil temperatures (1,3,4)
- Competition, or timed track use (5)

Additional servicing:
1. Oil & filter change @ 4,500 m (7,500 km) intervals.
2. Inspect air cleaner @ 9,000 m (15,000 km) intervals, or as required.
3. Inspect brake pads & discs @ 4,500m (7,500 km) intervals, or as required.
4. Thorough safety check including wheels, tyres, suspension, steering and brake systems.
5. The Lotus Elise and Exige are designed as road going sports cars. It is recognised that owners may wish to use the car occassionally on closed circuit tracks to experience the car's full range of dynamic capabilities. However, use of the car in a competitive manner, including timed runs or laps, is not endorsed by Lotus. This type of timed, competitive use will invalidate warranty and require appropriate levels of expert vehicle preparation and servicing.

After Sales Service
To be performed within 1,000 - 1,500 miles (1,500 - 2,500 km) or 12 months of vehicle sale, whichever first occurs.
If carried out by the selling dealer, there is no charge to the vehicle owner for the labour content of the After Sales Service. Only for materials used will a charge be made. To maintain warranty validation, an Engine History Report print out from the Lotus Scan tool must be submitted to the Warranty Department.

sn_oi_cyclone.indd 3 03/03/2006 11:24:16
Downloaded from www.Manualslib.com manuals search engine

Op. No.	Operation Description	Service Type		
		After Sales	9,000m (15,000km) or 12 months	Other Intervals
1	Fit protective covers to seats, footwells, steering wheel and rear body	X	X	
	Lubrication			
2	Renew engine oil and filter - ***normal conditions***	X	X	
2a	Renew engine oil and filter - ***special conditions***	4,500m (7,500km)/6 mth		
3	Inspect engine & transmission for oil leaks	X	X	
4	Check transmission oil level	27,000m (45,000km)		
5	Renew transmission oil	54,000m (90,000km)/6 yr		
	Engine			
6	Inspect air cleaner element - ***special conditions***		X	
7	Renew air cleaner element	27,000m (45,000km)		
8	Renew spark plugs	54,000m (90,000km)/6 yr		
9	Inspect auxiliary drive belt condition		X	
10	Inspect integrity of fuel system		X	
11	Connect 'Lotus Scan'; inspect fault codes & ECU programme level	X	X	
12	Print Engine History & Performance reports and return to Lotus	X		
	Cooling System			
13	Inspect water radiator & oil cooler hoses & pipework for damage or leaks. Clean radiator & oil cooler finning		X	
14	Check coolant level	X	X	
15	Renew coolant			4yrs
	Braking System			
16	Inspect parking brake adjustment	X	X	
17	Inspect brake pad thickness & disc condition - ***normal cndts.***		X	
17a	Inspect brake pad thickness & disc condition - ***special cndts.***	4,500m (7,500km)		
18	Inspect brake hoses, pipes & hydraulic units		X	
19	Check brake fluid level	X	X	
20	Renew brake/clutch fluid			1 yr
	Steering & Suspension			
21	Check security and condition of front & rear suspension inc. free articulation of rear toe link ball joints		X	
22	Check torque of rear toe link inboard fixing (50 Nm)	X		
23	Inspect dampers for leaks and performance		X	
24	Inspect front and rear wheel bearings for play		X	
25	Inspect condition of drive shaft gaiters		X	
26	Inspect steering ball joints and gaiters		X	
27	Inspect free play at steering wheel		X	
	Wheels & Tyres			
28	Inspect tyre condition & set pressures	X	X	
	Electrical			
29	Check battery & terminals for security & condition	X	X	
30	Inspect operation of all lights	X	X	
	Body			
31	Inspect adjustment of hinges and latches	X	X	
32	Inspect operation & condition of seat belts		X	
33	Lift footwell mats, clean & dry floor		X	
34	Inspect wiper operation & top up windscreen washer reservoir	X	X	
35	Renew alarm transmitter batteries (check with customer)			1 yr

lsl460a sn

sn_oi_cyclone.indd 4 03/03/2006 11:24:17
Downloaded from www.Manualslib.com manuals search engine

Road Test Performance

Engine performance ..... Tailpipe CO .....

Clutch operation ..... Gearbox operation .....

Brake performance ..... Steering performance .....

Driveline & suspension noise/vibration ..... Wheel balance .....

General comments .....

.....

.....

Additional Work Performed or Required

.....

.....

.....

.....

Work completed by ..... Owner's Maintenance Booklet stamped: .....

Recommended Service Times

After Sales Service:	1.9 hr
Regular Service:	2.8 hr
Op. 2a:	0.6 hr
Op.4:	0.1 hr
Op.5:	0.7 hr
Op.7:	0.6 hr
Op.8:	0.5 hr
Op.15:	0.6 hr
Op.17a:	0.3 hr
Op.20:	0.6 hr
Op.35:	0.1 hr

Dealer Stamp:

Date:

sn_oi_cyclone.indd 5 03/03/2006 11:24:17
Downloaded from www.Manualslib.com manuals search engine

MAINTENANCE SCHEDULE - ELISE/EXIGE (North America) LSL462

Job no.: ..... Owner's name: .....……..... Vehicle: .....……..……..

Vehicle Licence no.: .....……..... V.I.N.: .....…….....…

Recorded mileage: .....……..……..…… Mileage at last service.: .....……

Today's date: ……..……..……..... Date of last service: …….....

EXPLANATORY NOTES:

Required Maintenance
In order to maintain warranty validation and help ensure proper safety, emissions performance and dependability of the vehicle, Lotus Cars Ltd. requires that the vehicle be serviced in accordance with this schedule. Each service should be performed within 7,500 miles or 6 months of the previous service, whichever first occurs. Any necessary repairs should be completed without delay.
A cross (X) in the following table indicates an operation to be performed. The corresponding box should be ticked when the operation has been satisfactorily performed, or the X circled if extra work and time is required. The approval of the customer should be obtained before any extra work is undertaken, details of which should be recorded in the space provided at the end of the schedule.

'Inspect' means assess condition and test for correct operation. Extra time is required to adjust or repair - advise customer beforehand if necessary.

'Check' means test and adjust/fill or tighten as necessary. Labour time is included.

Special Operating Conditions
If the car is subjected to one of the following 'special operating conditions', additional servicing is required:
- Regular use on unpaved or dusty roads (1,2)
- Use in mountainous areas with severe or prolonged brake usage (3)
- Frequent short trips with cold engine (esp. in cold weather/climates); and/or frequent or prolonged idling (1)
- Occasional circuit use, with repeated high rpm, wide throttle openings and high oil temperatures (1,3,4)
- Competition, or timed track use (5)

Additional servicing:
1. Oil & filter change @ 4,500 m (7,500 km) intervals.
2. Inspect air cleaner @ 9,000 m (15,000 km) intervals, or as required.
3. Inspect brake pads & discs @ 4,500m (7,500 km) intervals, or as required.
4. Thorough safety check including wheels, tyres, suspension, steering and brake systems.
5. The Lotus Elise is designed as a road going sports car. It is recognised that owners may wish to use the car occassionally on closed circuit tracks to experience the car's full range of dynamic capabilities. However, use of the car in a competitive manner, including timed runs or laps, is not endorsed by Lotus. This type of timed, competitive use will invalidate warranty and require appropriate levels of expert vehicle preparation and servicing.

After Sales Service
To be performed within 1,000 - 1,500 miles or 12 months of vehicle sale, whichever first occurs.
To maintain warranty validation, an Engine History Report print out from the Lotus Scan tool must be submitted to the Warranty Department.

sn_oi_cyclone.indd 6 03/03/2006 11:24:17
Downloaded from www.Manualslib.com manuals search engine

Op. No.	Operation Description	Service Type		
		After Sales	7,500 miles or 6 months (soonest)	Other Intervals
1	Fit protective covers to seats, footwells, steering wheel and rear body	X	X	
	Lubrication			
2	Renew engine oil and filter - ***normal conditions***	X	X	
2a	Renew engine oil and filter - ***special conditions***	4,000 miles/6 months		
3	Inspect engine & transmission for oil leaks	X	X	
4	Check transmission oil level	22,500 miles		
5	Renew transmission oil	45,000 miles/6 years		
	Engine			
6	Inspect air cleaner element - ***special conditions***		X	
7	Renew air cleaner element	30,000 miles		
8	Renew spark plugs	30,000 miles/6 years		
9	Inspect auxiliary drive belt condition		X	
10	Inspect integrity of fuel system		X	
11	Connect 'Lotus Scan'; inspect ECU program level	X	X	
12	Print Engine History & Performance reports; return to Lotus	X		
	Cooling System			
13	Inspect water radiator & oil cooler hoses & pipework for damage or leaks. Clean radiator & oil cooler finning		X	
14	Check coolant level	X	X	
15	Renew coolant			4yrs
	Braking System			
16	Inspect parking brake adjustment	X	X	
17	Inspect brake pad thickness & disc condition - ***normal cndts.***		X	
17a	Inspect brake pad thickness & disc condition - ***special cndts.***	4,000 miles		
18	Inspect brake hoses, pipes & hydraulic units		X	
19	Check brake fluid level	X	X	
20	Renew brake/clutch fluid			1 yr
	Steering & Suspension			
21	Check security and condition of front & rear suspension inc. free articulation of rear toe link ball joints		X	
22	Check torque of rear toe link inboard fixing (50 Nm)	X		
23	Inspect dampers for leaks and performance		X	
24	Inspect front and rear wheel bearings for play		X	
25	Inspect condition of drive shaft gaiters		X	
26	Inspect steering ball joints and gaiters		X	
27	Inspect free play at steering wheel		X	
	Wheels & Tyres			
28	Inspect tyre condition & set pressures	X	X	
	Electrical			
29	Check battery & terminals for security & condition	X	X	
30	Inspect operation of all lights	X	X	
	Body			
31	Inspect adjustment of hinges and latches	X	X	
32	Inspect operation & condition of seat belts		X	
33	Lift footwell mats, clean & dry floor		X	
34	Inspect wiper operation & top up windscreen washer reservoir	X	X	
35	Renew alarm transmitter batteries (check with customer)			1 yr

lsl462 sn

sn_oi_cyclone.indd 7 03/03/2006 11:24:17
Downloaded from www.Manualslib.com manuals search engine

Road Test Performance

Engine performance ..... Tailpipe CO .....

Clutch operation ..... Gearbox operation .....

Brake performance ..... Steering performance .....

Driveline & suspension noise/vibration ..... Wheel balance .....

General comments .....

.....

.....

Additional Work Performed or Required

.....

.....

.....

.....

Work completed by ..... Owner's Maintenance Booklet stamped: .....

Recommended Service Times

After Sales Service:	1.9 hr
Regular Service:	2.8 hr
Op.2a:	0.6 hr
Op.4:	0.1 hr
Op.5:	0.7 hr
Op.7:	0.6 hr
Op.8:	0.5 hr
Op.14:	0.6 hr
Op.16a:	0.3 hr
Op.19:	0.6 hr

Dealer Stamp:

Date:

sn_oi_cyclone.indd 8 03/03/2006 11:24:18
Downloaded from www.Manualslib.com manuals search engine

MAINTENANCE SCHEDULE - EXIGE SUPERCHARGED (Non-USA) LSL501

Job no.: ..... Owner's name: .....……..... Vehicle: .....……..……..

Vehicle registration no.: .....……..... V.I.N.: .....…….....…

Recorded mileage: .....……...……..…… Mileage at last service.: .....……

Today's date: ……..……...…… Date of last service: ……

EXPLANATORY NOTES:

Required Maintenance
In order to maintain warranty validation and help ensure proper safety, emissions performance and dependability of the vehicle, Lotus Cars Ltd. requires that the vehicle be serviced in accordance with this schedule. Each service should be performed within 9,000 miles (15,000 km) or 12 months of the previous service, whichever first occurs. Any necessary repairs should be completed without delay.
A cross (X) in the following table indicates an operation to be performed. The corresponding box should be ticked when the operation has been satisfactorily performed, or the X circled if extra work and time is required. The approval of the customer should be obtained before any extra work is undertaken, details of which should be recorded in the space provided at the end of the schedule.

'Inspect' means assess condition and test for correct operation. Extra time is required to adjust or repair - advise customer beforehand if necessary.

'Check' means test and adjust/fill or tighten as necessary. Labour time is included.

Special Operating Conditions
If the car is subjected to one of the following 'special operating conditions', additional servicing is required:
- Regular use on unpaved or dusty roads (1,2)
- Use in mountainous areas with severe or prolonged brake usage (3)
- Frequent short trips with cold engine (esp. in cold weather/climates); and/or frequent or prolonged idling (1)
- Occasional circuit use, with repeated high rpm, wide throttle openings and high oil temperatures (1,3,4)
- Competition, or timed track use (5)

Additional servicing:
1. Oil & filter change @ 3,500 m (5,500 km) intervals.
2. Inspect air cleaner @ 9,000 m (15,000 km) intervals, or as required.
3. Inspect brake pads & discs @ 1,000m (1,500 km) intervals, or as required.
4. Thorough safety check including wheels, tyres, suspension, steering and brake systems.
5. The Lotus Elise and Exige are designed as road going sports cars. It is recognised that owners may wish to use the car occassionally on closed circuit tracks to experience the car's full range of dynamic capabilities. However, use of the car in a competitive manner, including timed runs or laps, is not endorsed by Lotus. This type of timed, competitive use will invalidate warranty and require appropriate levels of expert vehicle preparation and servicing.

After Sales Service
To be performed within 1,000 - 1,500 miles (1,500 - 2,500 km) or 12 months of vehicle sale, whichever first occurs.
If carried out by the selling dealer, there is no charge to the vehicle owner for the labour content of the After Sales Service. Only for materials used will a charge be made. To maintain warranty validation, an Engine History Report print out from the Lotus Scan tool must be submitted to the Warranty Department.

sn_oi_cyclone.indd 9 03/03/2006 11:24:18
Downloaded from www.Manualslib.com manuals search engine

Op. No.	Operation Description	Service Type		
		After Sales	9,000m (15,000km) or 12 months	Other Intervals
1	Fit covers to seats, footwells, steering wheel and rear body	X	X	
	Lubrication			
2	Renew engine oil and filter - ***normal conditions***	X	X	
2a	Renew engine oil and filter - ***special conditions***	3,500m (5,500km)/6 mth		
3	Inspect engine & transmission for oil leaks	X	X	
4	Check transmission oil level	27,000m (45,000km)		
5	Renew transmission oil	54,000m (90,000km)/6 yr		
	Engine			
6	Inspect air cleaner element - ***special conditions***		X	
7	Renew air cleaner element	27,000m (45,000km)		
8	Renew spark plugs		X	
9	Inspect auxiliary drive belt condition		X	
9a	Inspect auxiliary drive belt condition - ***special conditions***	3,500m (5,500km)/6 mth		
9b	**If applicable:** Check Accusump pressure/operation and system for leaks. Renew in-line filter gauze	X	X	
9c	Remove bellows and inspect chargecooler for damage. Clean. Replace double sided tape for bellows mounting		X	
10	Inspect integrity of fuel system and (if applicable) check security of 5th injector		X	
11	Connect 'Lotus Scan'; inspect fault codes & ECU programme level	X	X	
12	Print Engine History & Performance reports and return to Lotus	X		
	Cooling System			
13	Inspect water radiator & oil cooler hoses & pipework for damage or leaks. Clean radiator & oil cooler finning		X	
14	Check coolant level	X	X	
15	Renew coolant			3yrs
	Braking System			
16	Inspect parking brake adjustment	X	X	
17	Inspect brake pad thickness & disc condition - ***normal cndts.***		X	
17a	Inspect brake pad thickness & disc condition - ***special cndts.***	1,000m (1,500km)		
18	Inspect brake hoses, pipes & hydraulic units		X	
19	Check brake fluid level	X	X	
20	Renew brake/clutch fluid		X	
	Steering & Suspension			
21	Check security and condition of front & rear suspension inc. free articulation of rear toe link ball joints		X	
22	Check torque of rear toe link inboard fixing (50 Nm)	X	X	
23	Inspect dampers for leaks and performance		X	
23a	Where applicable: Check security of damper reservoirs, check adjuster settings, lubricate adjusters and spring platforms		X	
23b	Lubricate anti roll bar chassis mountings and adjuster threads		X	
24	Inspect front and rear wheel bearings for play		X	
25	Inspect condition of drive shaft gaiters		X	
26	Inspect steering ball joints and gaiters		X	
27	Inspect free play at steering wheel		X	
	Wheels & Tyres			
28	Inspect tyre condition & set pressures	X	X	
	Electrical			
29	Check battery & terminals for security & condition	X	X	
30	Inspect operation of all lights	X	X	
	Body			
30a	Check hardtop air intake for obstructions	X	X	
31	Inspect adjustment of hinges and latches	X	X	
32	Inspect operation & condition of seat belts		X	
33	Lift footwell mats, clean & dry floor		X	
34	Inspect wiper operation & top up windscreen washer reservoir	X	X	
35	Renew alarm transmitter batteries (check with customer)			1 yr

lsl501

sn_oi_cyclone.indd 10 03/03/2006 11:24:18
Downloaded from www.Manualslib.com manuals search engine

Road Test Performance

Engine performance ..... Tailpipe CO .....

Clutch operation ..... Gearbox operation .....

Brake performance ..... Steering performance .....

Driveline & suspension noise/vibration ..... Wheel balance .....

General comments .....

.....

.....

Additional Work Performed or Required

.....

.....

.....

.....

Work completed by ..... Owner's Maintenance Booklet stamped: .....

Recommended Service Times

After Sales Service:	1.9 hr
Regular Service:	2.8 hr
Op. 2a:	0.6 hr
Op.4:	0.1 hr
Op.5:	0.7 hr
Op.7:	0.6 hr
Op.8:	0.5 hr
Op.9b:	0.3 hr
Op.9c:	0.3 hr
Op.15:	0.6 hr
Op.17a:	0.3 hr
Op.20:	0.6 hr
Op.35:	0.1 hr

Dealer Stamp:

Date:

sn_oi_cyclone.indd 11 03/03/2006 11:24:18
Downloaded from www.Manualslib.com manuals search engine

PRE-DELIVERY INSPECTION

ELISE/EXIGE LSL345D

MODEL		COLOUR		VIN	SCC _ _ _ _ _ _ _ _ _ _ _ _ _ _

OPERATION DESCRIPTION	✓
Fit protective covers to seats, footwells & steering wheel.	
Engine Bay	
Check engine & transmission oil levels.	
Check coolant fill level.	
Start Engine	
Inspect engine & transmission for oil leaks.	
Inspect cooling system for leaks.	
Fill fuel tant & inspect entire fuel system for leaks.	
Use Lotus Scan tool to check stored codes.	
Wheels & Tyres	
Check cold tyre pressures.	
Check torque of wheel bolts.	
Check tyreweld canister is fitted in rear luggage compartment.	
Electrical	
Check security of battery terminals.	
Inspect operation of alarm system & CDL.	
Inspect operation of all exterior & interior lamps.	
Inspect operation of horn & hazard switch.	
Inspect wiper operation at all speeds & park position.	
Inspect washer operation, jet alignment & reservoir level.	
Inspect operation of all instruments.	
Inspect operation of heater / air conditioning & blower fan.	
Inspect operation of audio equipment & set time clock (if applicable).	
Body	
Check brake / clutch fluid level.	
Inspect operation of doors & door locks.	
Inspect operation of electric window lift mechanism.	
Inspect fit of hard & soft top roofs.	
Inspect seat adjustment latching, lumbar support & operation of seatbelts.	
Inspect interior trim for damage & cleanliness.	
Inspect all paint work for damage (Fill in attached paint damage sheet as necessary).	
Check presence of toolkit & literature pack.	
Fit number plates and tax disc holder.	
Complete Warranty Literature	
Check presence of vehicle handbook, audio booklet & other documentation.	
Complete pages 2, 3, 4a & 4c in "Maintenance Record" booklet.	
Cut out pages 4a & 4c for return to Lotus Cars Warranty Department.	
Copy alarm installation certificate, PIN & key details (including locking wheel nuts). Supply originals to customer & retain copy in dealer's customer file.	
U.K.: Complete Lotus Roadside Assistance card (expiry date 2 years from reg. date) & replace in pack.	

sn_oi_cyclone.indd 12 03/03/2006 11:24:19
Downloaded from www.Manualslib.com manuals search engine

Road Test Performance Check - Add comments as necessary		
Engine performance:		
Brake performance:		
Clutch operation:		
Gearbox operation:		
Steering performance:		
Check wheel balance:		
Driveline/suspension noise/vibration:		

General Comments

Additional Work Required

Additional Work Completed by:	

Valet	
Undertake complete vehicle valet.	

Notes - The PDI is subject to the following conditions:

a) It is the responsibility of the supplying dealer to ensure that the car is delivered to the customer in the best possible condition.

b) All costs incurred during the inspection process are the responsibility of the dealer.

c) Failure to return a signed copy of this inspection to Lotus Cars Ltd. by the dealer, may result in warranty claims on the particular car being rejected.

Dealer stamp:

Pre-Delivery Inspection Completed by:	
Date:	

ONCE COMPLETED, SEND ORIGINAL COPY OF PDI FORM, OWNER'S HANDBOOK MAINTENANCE RECORD PAGES "P.D.I & REGISTRATION OF SALE", AND NEW CAR HANDOVER CHECKLIST (LSL486) TO:

WARRANTY DEPARTMENT,
LOTUS CARS LTD.
POTASH LANE,
HETHEL,
NORFOLK,
NR14 8EZ,
ENGLAND

sn_oi_cyclone.indd 13 03/03/2006 11:24:20
Downloaded from www.Manualslib.com manuals search engine

PRE-DELIVERY PAINT MARK UP - ELISE

LSL407

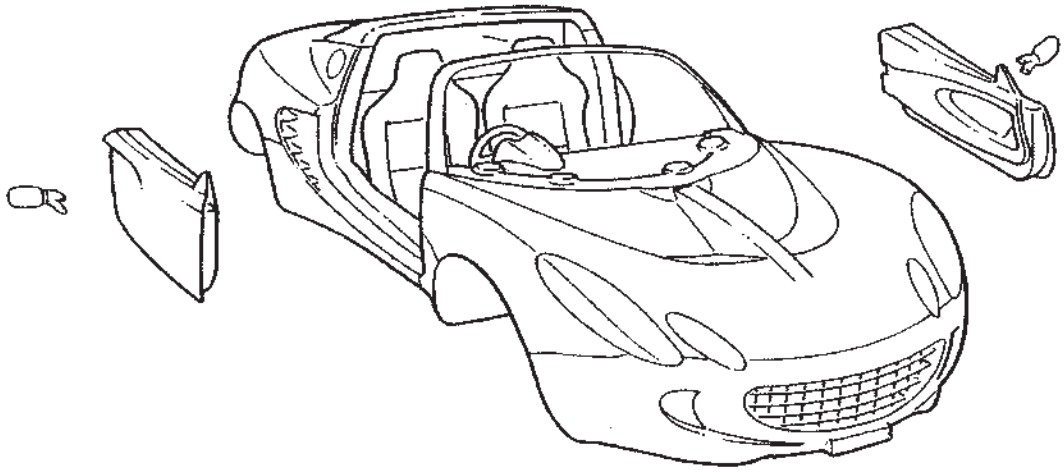

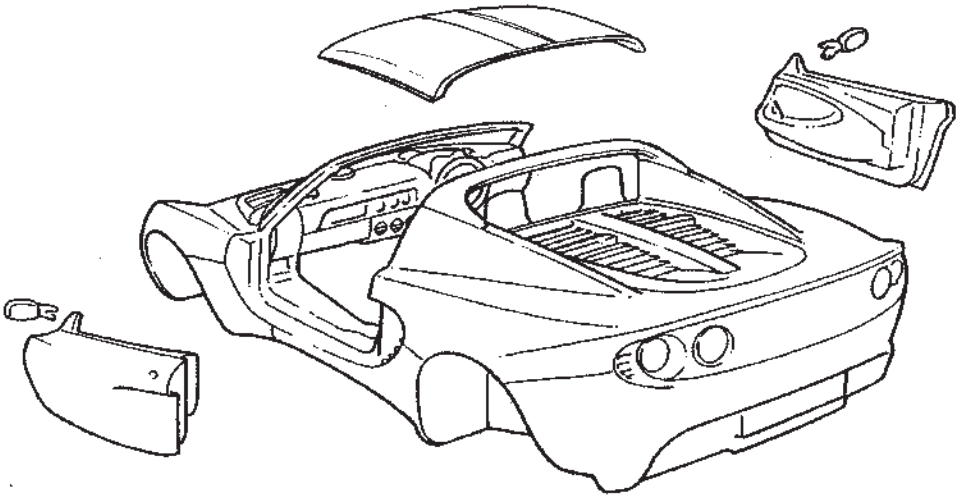

VIN	
COLOUR	
OWNER	
DATE OF PDI	

PAINT DEFECT CODE			
B	BLISTERING	N	SHADING
C	CHIPS	O	OVERSPRAY
D	DISTORTION	P	PRE-RELEASES
F	FLAKING	R	RUN
G	GEL CRAZING	S	SCRATCHES
H	PIN HOLES	T	THIN PAINT
K	SINKAGE	U	DIRT UNDER PAINT
M	MAT CREASES	V	VOIDS

sn_oi_cyclone.indd 14 03/03/2006 11:24:20
Downloaded from www.Manualslib.com manuals search engine

PRE-DELIVERY PAINT MARK UP - EXIGE

LSL409a

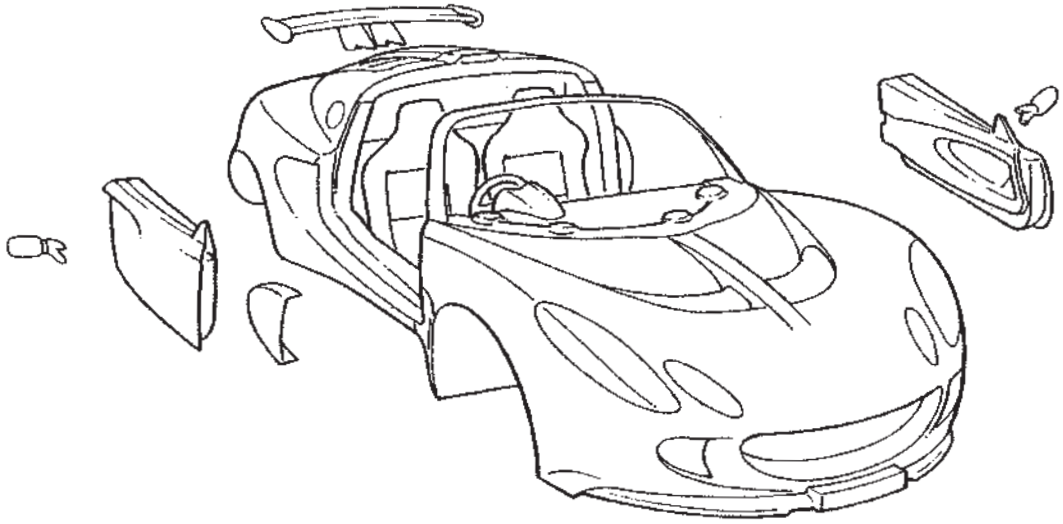

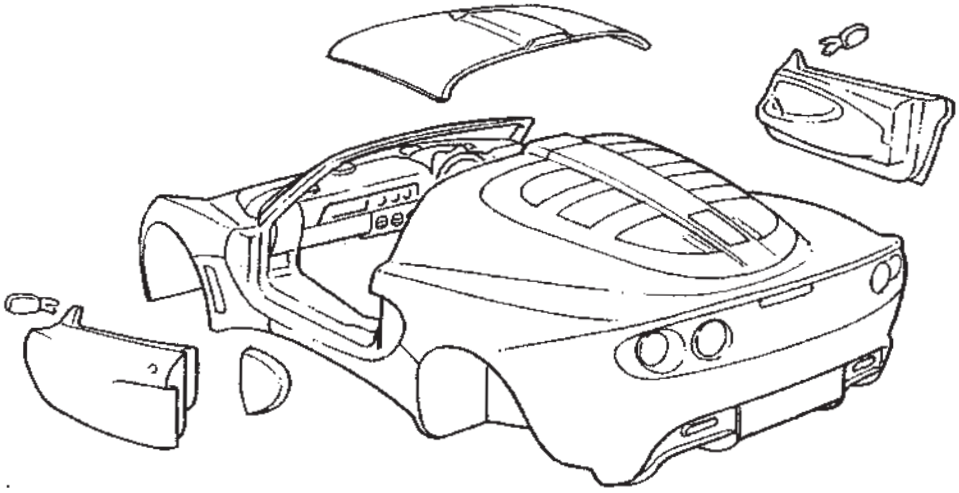

VIN	
COLOUR	
OWNER	
DATE OF PDI	

PAINT DEFECT CODE			
B	BLISTERING	N	SHADING
C	CHIPS	O	OVERSPRAY
D	DISTORTION	P	PRE-RELEASES
F	FLAKING	R	RUN
G	GEL CRAZING	S	SCRATCHES
H	PIN HOLES	T	THIN PAINT
K	SINKAGE	U	DIRT UNDER PAINT
M	MAT CREASES	V	VOIDS

sn_oi_cyclone.indd 15 03/03/2006 11:24:20
Downloaded from www.Manualslib.com manuals search engine

Licence Plate Fitment - Except North America

Front

The mounting plinth for the front licence plate is moulded into the front clamshell, and is slightly curved in plan. Typically, double sided tape in conjunction with two fixing screws are used to secure the plate which should not project above the top edge of the plinth by more than 40mm, or cooling performance will be inhibited. Conversely, too low a position may result in damage from grounding on ramps and kerbs.

Proprietary threaded blind fixings such as Pulserts, Rivnuts, Rawlnuts or Jacknuts may be used, or alternatively, using the limited access available from beneath the nose of the clamshell, any non-captive fixing may be used.

Licence Plate Fitment on North American Elise LSL480

Front

The Elise front clamshell incorporates a moulded plinth for the front licence plate. A licence plate mounting frame is supplied loose with the car for those States which require front plates. The aluminium frame has four M6 threaded studs, and should be fitted to the clamshell plinth by marking and drilling the four 6mm clearance holes symmetrically about the vertical and horizontal centrelines of the plinth. A template is attached for your convenience.

Fit the frame with the longer legs uppermost, and remove the air intake grille to allow access to secure the frame with flat washers and M6 Nyloc nuts. Do not overtighten. Refit the grille and fit the licence plate to the mounting frame.

Rear

The rear licence plate plinth is provided with two sets of four M6 threaded inserts positioned in different configurations to suit various State requirements.

sn_oi_cyclone.indd 16 03/03/2006 11:24:21
Downloaded from www.Manualslib.com manuals search engine

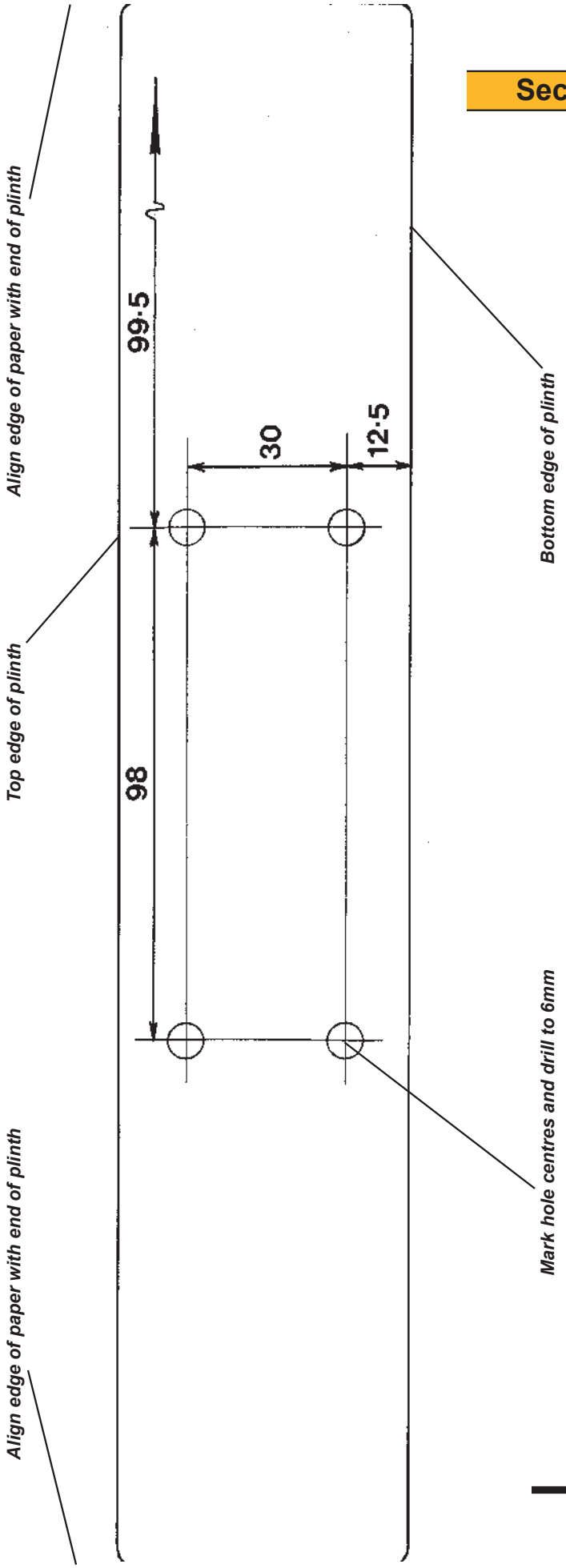

sn_oi_cyclone.indd 17 03/03/2006 11:24:21
Downloaded from www.Manualslib.com manuals search engine

AIR CONDITIONING, HEATING & VENTILATION

SECTION PL

	Sub-Section	Page
General Description	PL.1	3
Controls Operation & Airflow Distribution	PL.2	5
Cooling Fans & Re-circulation Pump	PL.3	11
Refrigerant Handling	PL.4	13
Refrigerant Pipework Precautions	PL.5	13
Refrigerant Oil	PL.6	15
Compressor	PL.7	16
Condenser	PL.8	18
Receiver-Drier	PL.9	20
Expansion Valve	PL.10	20
Heater/Evaporator/Fan Unit	PL.11	21
Air Distribution Unit	PL.12	22
Refrigerant Pipes	PL.13	23
Air Blender & Re-circ. Flap Actuators	PL.14	23

Downloaded from www.Manualslib.com manuals search engine

Heater Circuit

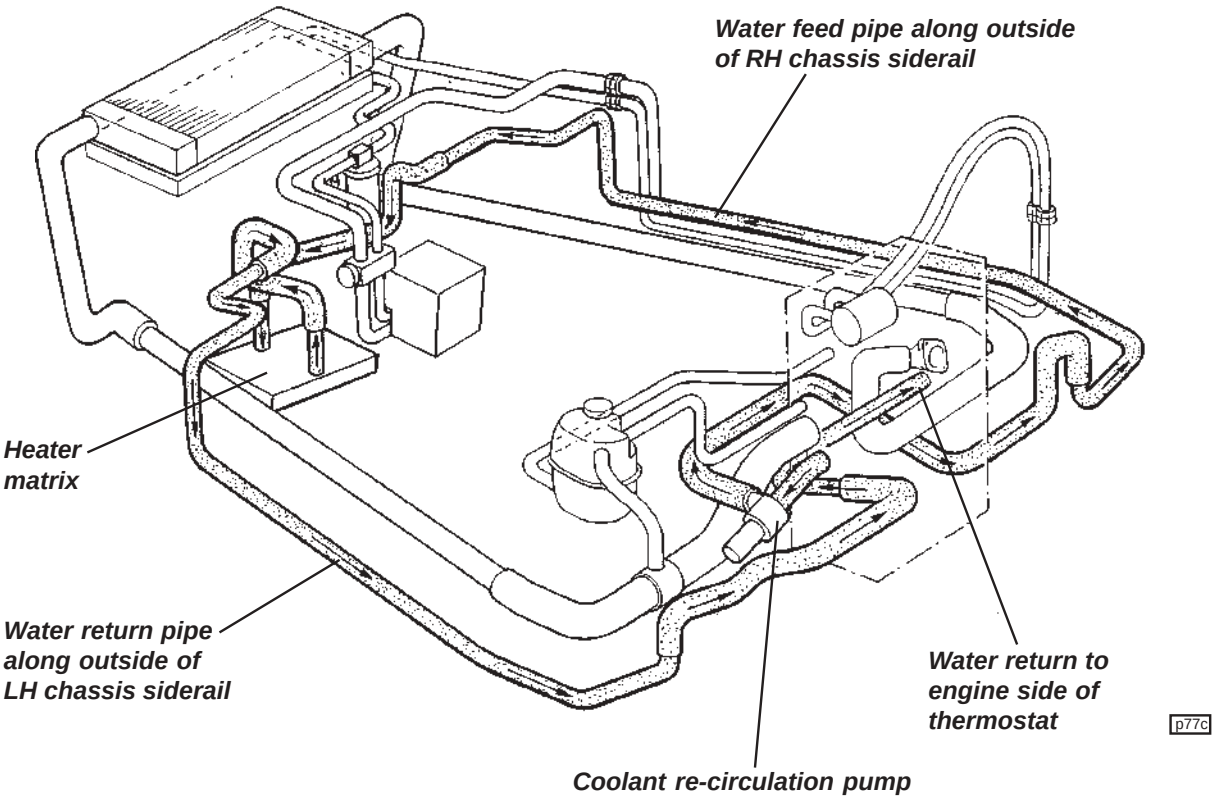

Refrigerant Circuit

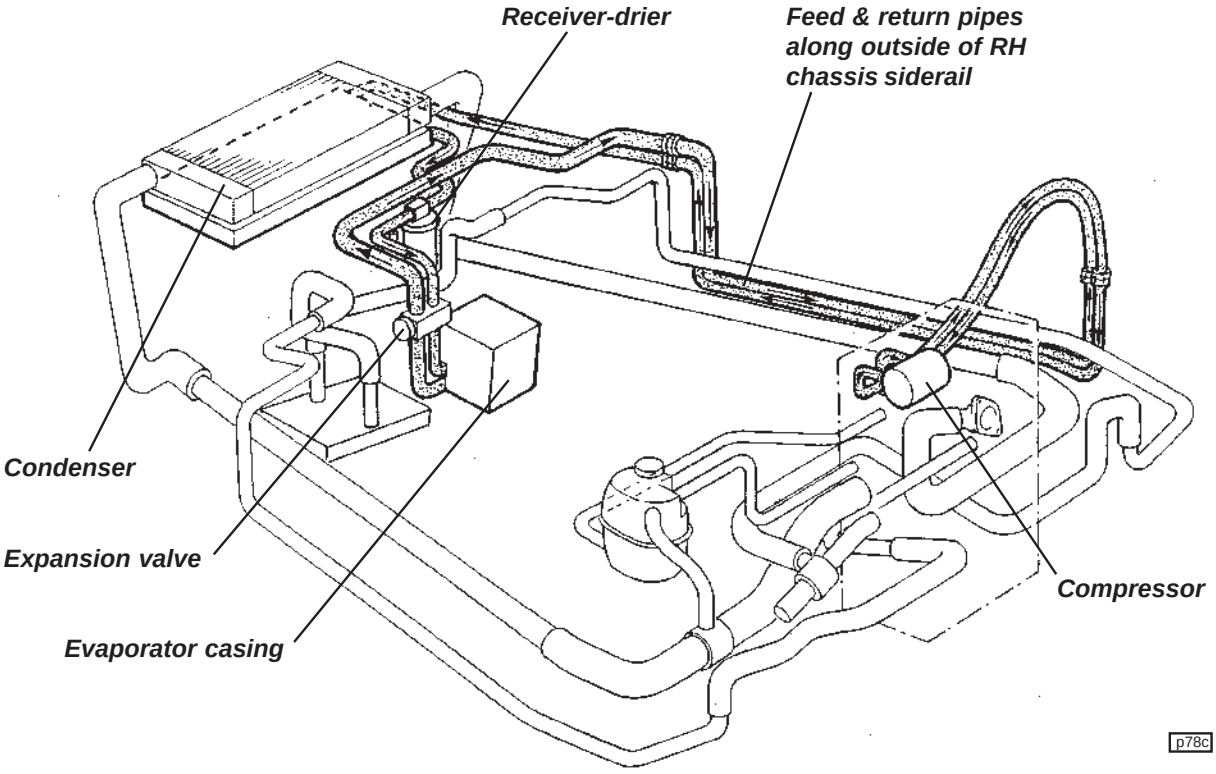

Downloaded from www.Manualslib.com manuals search engine

PL.1 - GENERAL DESCRIPTION

Heater System

The heater system uses engine coolant to provide a heat source transferred to the interior airstream via a heat exchanger matrix mounted in an 'air blend' unit housed within the chassis well, ahead of the cabin footwell. The coolant is fed from an outlet on the left hand side of the cylinder head, and via an alloy pipe running along the outside of the RH chassis side rail to the matrix. Coolant is returned via a similar pipe along the outside of the LH chassis rail to a by-pass return pipe on the left hand side of the engine.

Air temperature is controlled by a pair of air blend flaps within the heater housing which direct a varying proportion of the airflow through, or around the matrix as determined by the position of the temperature selector knob. Note that no water valve is fitted, such that the matrix is always 'hot' when the engine is running.

Air Conditioning (If fitted) - Basic Principles

The air conditioning unit uses a cycling clutch system with a thermostatic expansion valve to provide refrigerated air to the vehicle interior. The system comprises:

- a closed circuit containing refrigerant R134a;
- a compressor mounted on the front side of the engine, driven by multi-vee belt from the front end of the crankshaft via an electromagnetic clutch;
- a condenser mounted horizontally at the front of the car, beneath the engine cooling radiator;
- an evaporator unit (cooler) fitted in the chassis well ahead of the cabin footwell;
- a thermostatic expansion valve fitted at the inlet connection to the evaporator;
- a receiver-drier unit mounted above the heater/a.c. unit

Closed Circuit

The closed refrigerant circuit should not be opened unless absolutely necessary, and only then using appropriate refrigerant recovery equipment. Never allow the refrigerant to vent to atmosphere. Refer to subsection PL.5. Failure to observe these precautions may result in personal injury.

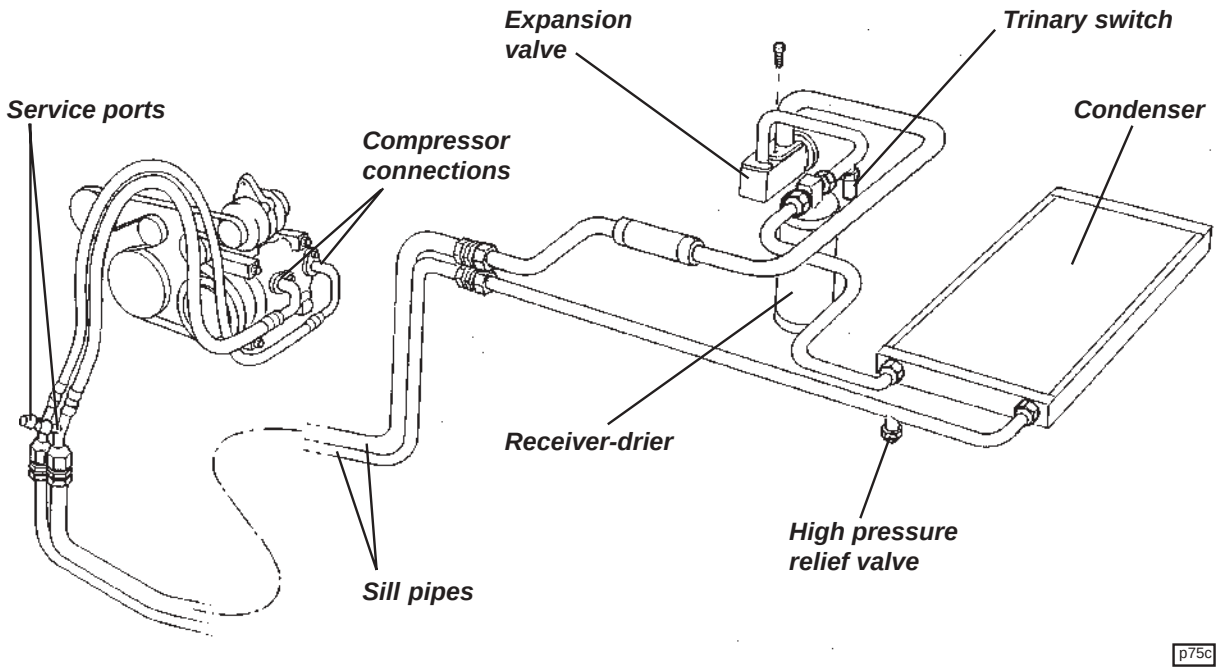

Downloaded from www.Manualslib.com manuals search engine

Compressor

When the engine is running, and the refrigeration controls demand it, the electromagnetic clutch incorporated in the compressor pulley is energised, which then locks the pulley to the shaft and drives the compressor. The rotary vane type compressor operates to discharge refrigerant vapour at high pressure and temperature into the condenser. The compressor is lubricated by a quantity of special refrigerant oil, most of which is retained in the compressor, with the remainder being circulated with the refrigerant. An integral thermal cut-out switch is designed to prevent overheating damage by interrupting the compressor clutch circuit if an excessively high temperature is detected.

A thermostat, sensing the temperature of the refrigerated air as it leaves the evaporator, signals the compressor to cycle on and off. In order to avoid engine stalling and to maintain idle speed when the compressor driving load is placed on the engine, the a.c. request and compressor command signals are processed by the engine management ECU, which amends the idle air control valve position as necessary.

Condenser

The aluminium condenser is horizontally mounted beneath the engine cooling radiator, and is of parallel flow construction. The hot vapour received by the condenser from the compressor, releases heat to the surrounding air via the condenser finning, with airflow boosted by two electric fans mounted below the condenser, and ram air flow caused by vehicle movement.

Evaporator

The evaporator is a tube and fin type heat exchanger mounted in a plastic housing fitted into the chassis well ahead of the passenger compartment footwell. All incoming airflow is directed through the evaporator, before being directed through or past the heater matrix, and then into the air distribution chamber.

The low pressure liquid refrigerant flowing into the evaporator via the expansion valve, begins to boil (evaporate) and in so doing, draws the necessary heat for this process from the airstream passing through the evaporator. This airstream is consequently cooled, and is directed through the various outlet vents to the passenger compartment.

When the a.c. switch is pressed by the driver, and other parameters allow it (i.e. ignition on, blower fan speed selected, a.c. pressure switch closed), the a.c. circuit is activated and the compressor clutch is engaged. A thermostat, using a sensor inserted into the outlet side of the evaporator finning, monitors the temperature of the refrigerated air and signals the compressor to cycle on and off in order to maintain outlet air temperature just above freezing.

The inlet and outlet pipes connect to the evaporator via the expansion valve block, into which they are sealed using 'O' rings and a clamp plate. The inlet is supplied from the receiver-drier, and the outlet feeds the compressor.

Expansion Valve

The expansion valve block is fitted into the high and low pressure lines at the evaporator, and provides a restriction to the flow of high pressure liquid into the evaporator, such that the consequent pressure drop causes a change of state from a high temperature, high pressure liquid, to a low pressure, low temperature atomised liquid.

By sensing the temperature and pressure of refrigerant leaving the evaporator, the expansion valve is able to modulate the flow of refrigerant into the unit to optimise the cooling performance.

Receiver-Drier

The receiver-drier unit is fitted into the refrigerant line between the condenser and evaporator expansion valve, and houses a screen sack filled with desiccant to absorb traces of moisture and other contaminants from the refrigerant. The unit is mounted in the chassis well above the heater/a.c. unit. A sight glass built into the top of the receiver-drier allows a visual assessment of refrigerant charge to be made - a clear sight glass may indicate that the system is correctly charged, or completely empty, although the latter situation is usually accompanied by oil streaks. If refrigerant charge is low, a stream of bubbles will be visible at the sight glass.

A trinary switch fitted into the top of the receiver-drier senses the pressure of refrigerant and allows system operation only within a pressure range of 2 to 32 bar in order to prevent system damage from too high a pressure, or from compressor oil starvation damage caused by too low a pressure. A third switching point is used to engage the two condenser fans at half speed at pressures over 17.5 bar (see also sub-section KH.5). An additional safeguard is provided in the form of a high pressure relief valve in the condenser inlet pipe, which opens at 38 - 41 bar.

Downloaded from www.Manualslib.com manuals search engine

PL.2 - HEATER/A.C. AIRFLOW OVERVIEW

The major units of the Heating Ventilation and Air Conditioning (HVAC) system comprise a dual intake blower fan, an evaporator housing (with no evaporator fitted for non a.c. cars), a heater housing and an airflow distribution unit. The fan blower unit and the combined evaporator/heater unit are mounted in the chassis climate chamber ahead of the cabin footwells, with the airflow distribution unit mounted on the top of the chassis scuttle area. Ambient air is collected from the radiator air intake duct via two ports in the radiator ducting, which mate to apertures in the chassis front crossmember. Moulded ducting on the rear side of the chassis front face directs this air, via a shut off butterfly flap valve on a.c. cars (to provide a recirc. function), to the blower fan front intake. The rear intake of the double sided fan housing is connected to perforated ports in the front wall of each footwell.

The fan blower unit directs all airflow through the a.c. evaporator (if fitted), after which a pair of linked air blender flaps, control the proportion of air which flows through the heater matrix. The upper flap is driven by a stepper motor from the cockpit temperature selector, with the lower flap linked to the upper by toothed belt. After leaving the HVAC chamber, air is ducted to a distribution chamber mounted on the top of the chassis scuttle which distributes air to screen, face level vents and footwell vents. The distribution chamber contains a horizontal, three vane, rotary flap, driven by a stepper motor, and controlling outlets to the screen and face level vents. A link rod connects this flap to a second flap controlling airflow to the footwells. Ducting for the windscreen vents is incorporated into the underside of the fascia top panel.

Schematic Airflow

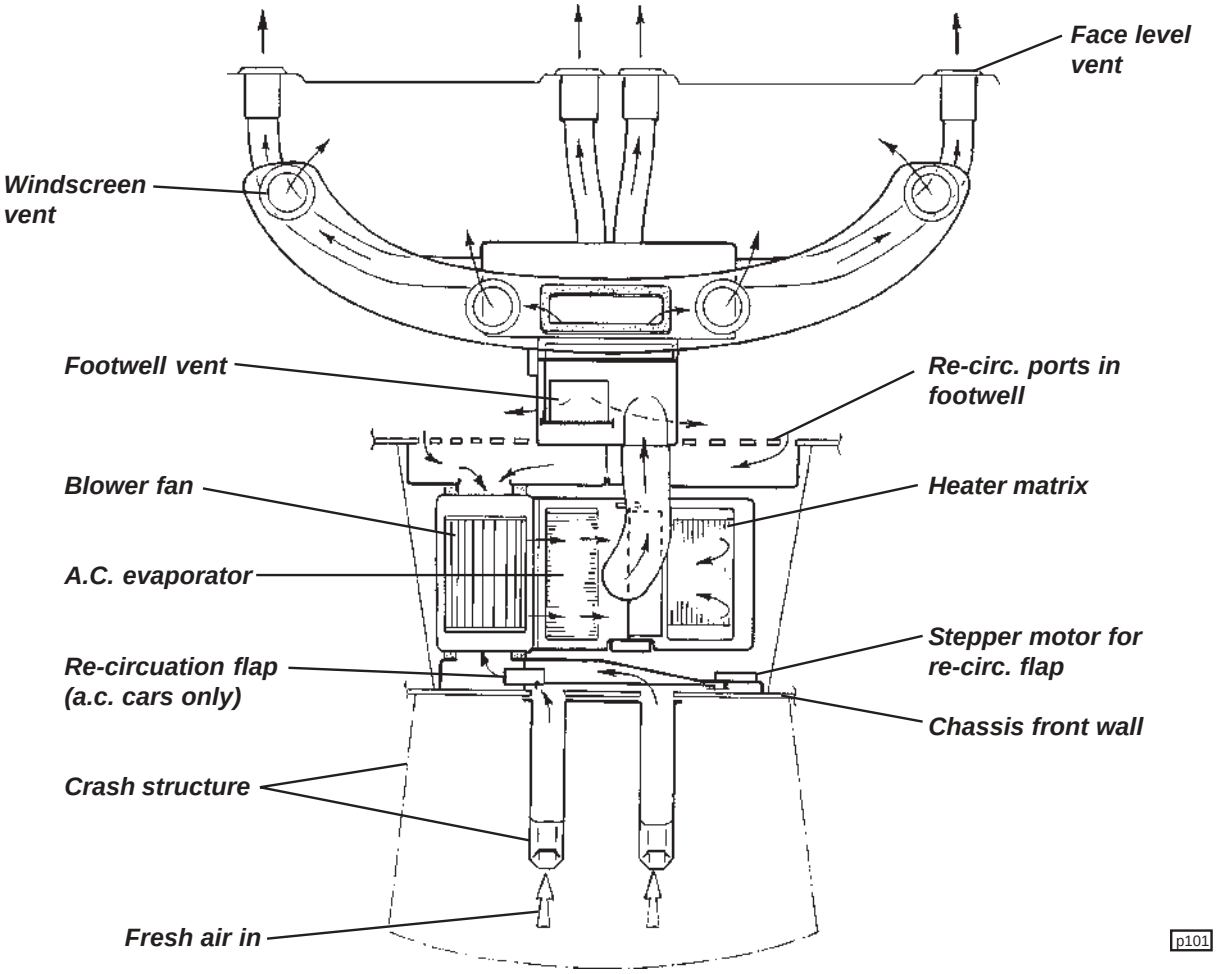

p101

Downloaded from www.Manualslib.com manuals search engine

Airflow through a.c./heater unit

Cold air

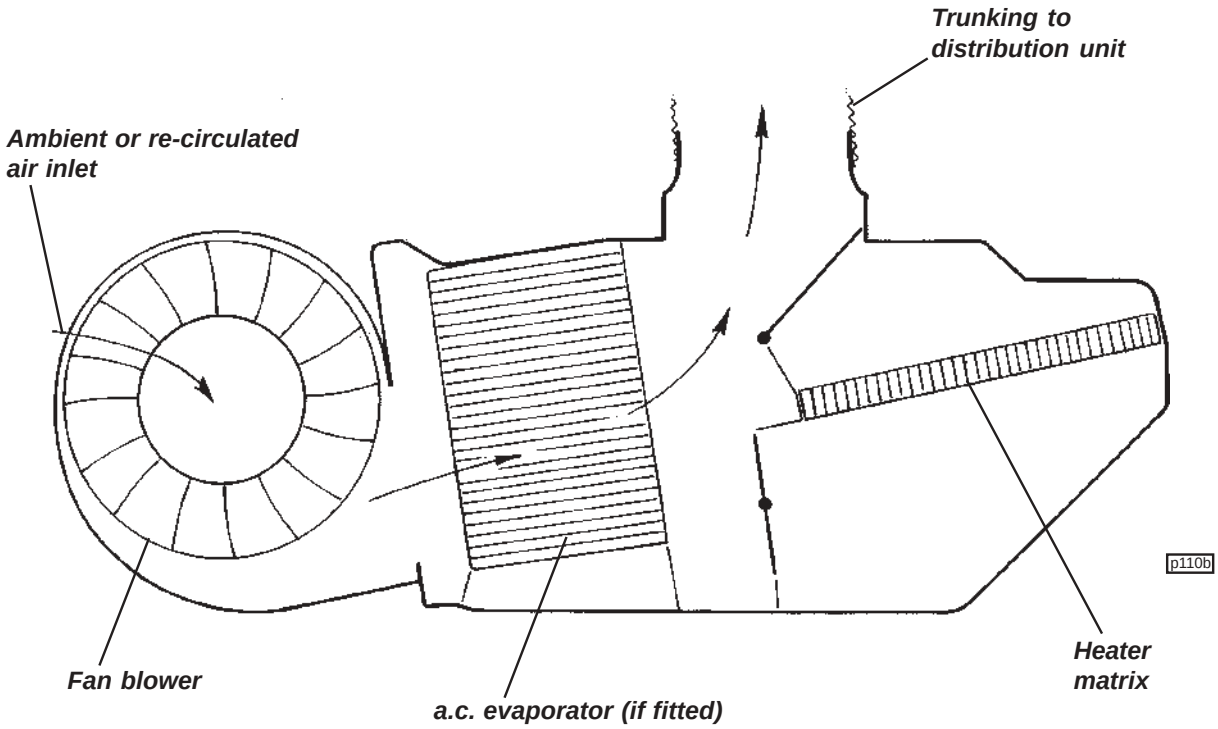

Warm air

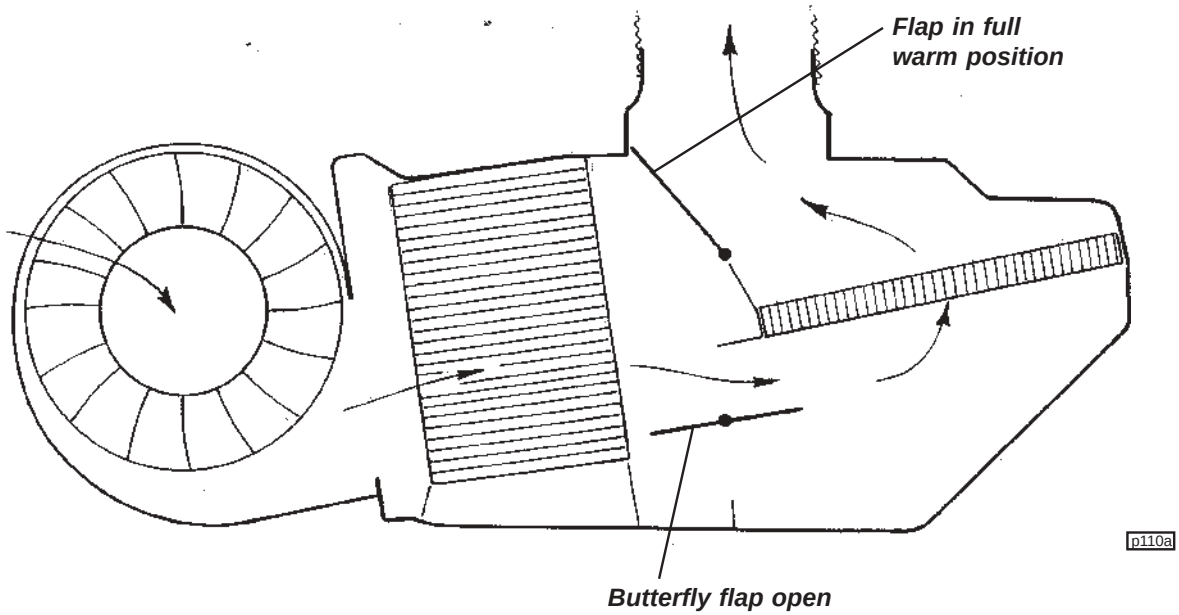

Downloaded from www.Manualslib.com manuals search engine

Interior Climate Controls

The interior climate controls consist of two push switches (if fitted) for air conditioning and air re-circulation, and three rotary controls for heater temperature, fan speed, and air distribution.

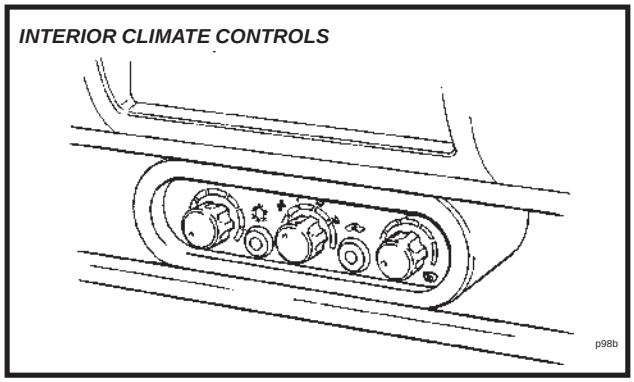

Air Conditioning (if fitted)

The left hand push button switch requests air conditioning, but the engine must be running and a *fan speed selected* before the system will operate. The a.c. switch receives its feed from the fan speed switch and energises the a.c. request relay. When closed, the request relay supplies, via the a.c. thermostat and trinary switch, an ECM input. The ECM processes a valid request input, and if other parameters allow (e.g. not wide open throttle, not excessive coolant temperature), the ECM will open the IAC valve before energising the a.c. clutch relay. Note also that ambient air temperature must be above 3°C.

With a fully cold temperature setting, refrigerated air will be supplied. For dehumidified air, select air conditioning in conjunction with a warm temperature setting.

The tell tale in the switch button lights up green when the circuit is active.

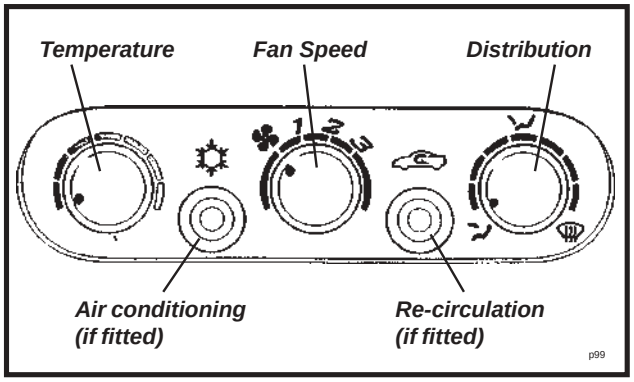

Air Re-circulation (with a.c.)

Air supply for the interior climate system is normally drawn from both the intake duct ahead of the engine cooling radiator, and the vehicle interior. When the re-circulation button is pressed, a stepper motor is activated to close a butterfly flap in the fresh air intake, in order to provide a 90% recirculation supply to the blower fan. The re-circulation facility should be used when maximum refrigeration is desired. The tell tale in the switch button lights up green when the circuit is active.

Heater Temperature

With the left hand rotary electrical control turned fully counterclockwise, the air blender flaps are positioned to direct all the airflow to by-pass the heater chamber so that no air heating is provided. If air cooling is required, use this temperature position in conjunction with air conditioning. Turning the control progressively clockwise operates the stepper motor attached to the upper flap spindle, and via toothed belt to the lower flap, to direct airflow through the heater matrix and provide an increasing level of air heating until at the fully clockwise position, maximum heat is supplied.

Fan Speed

The centre rotary switch provides three fan speeds to boost air circulation. Turned fully counterclockwise, the fan is off; Turning the switch progressively clockwise operates the blower fan at increasing speed in three steps. Note that the fan operates only with the ignition switched on. The fan speed resistors are mounted in the top of the evaporator housing.

Air Distribution

The right hand electrical rotary control operates a stepper motor on the air distribution unit to direct airflow to the windscreen, face level and footwell vents. The following diagrams indicate airflow for the different control positions:

Downloaded from www.Manualslib.com manuals search engine

Face Level):

Turned fully counterclockwise, the stepper motor on the air distribution unit (ADU) operates the rotary flap to close off the windscreen vents, and direct all airflow to the four face level vents, each of which may be manipulated to adjust volume and direction. The footwell flap is closed.

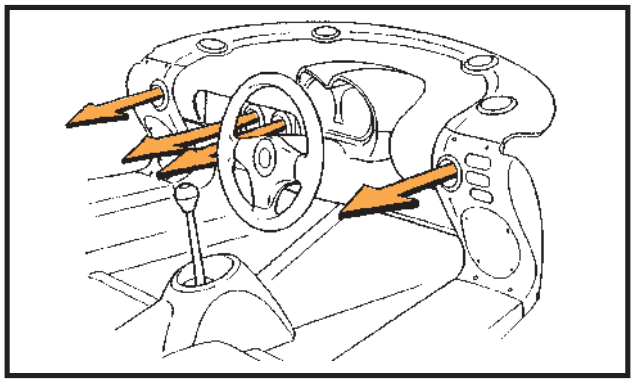

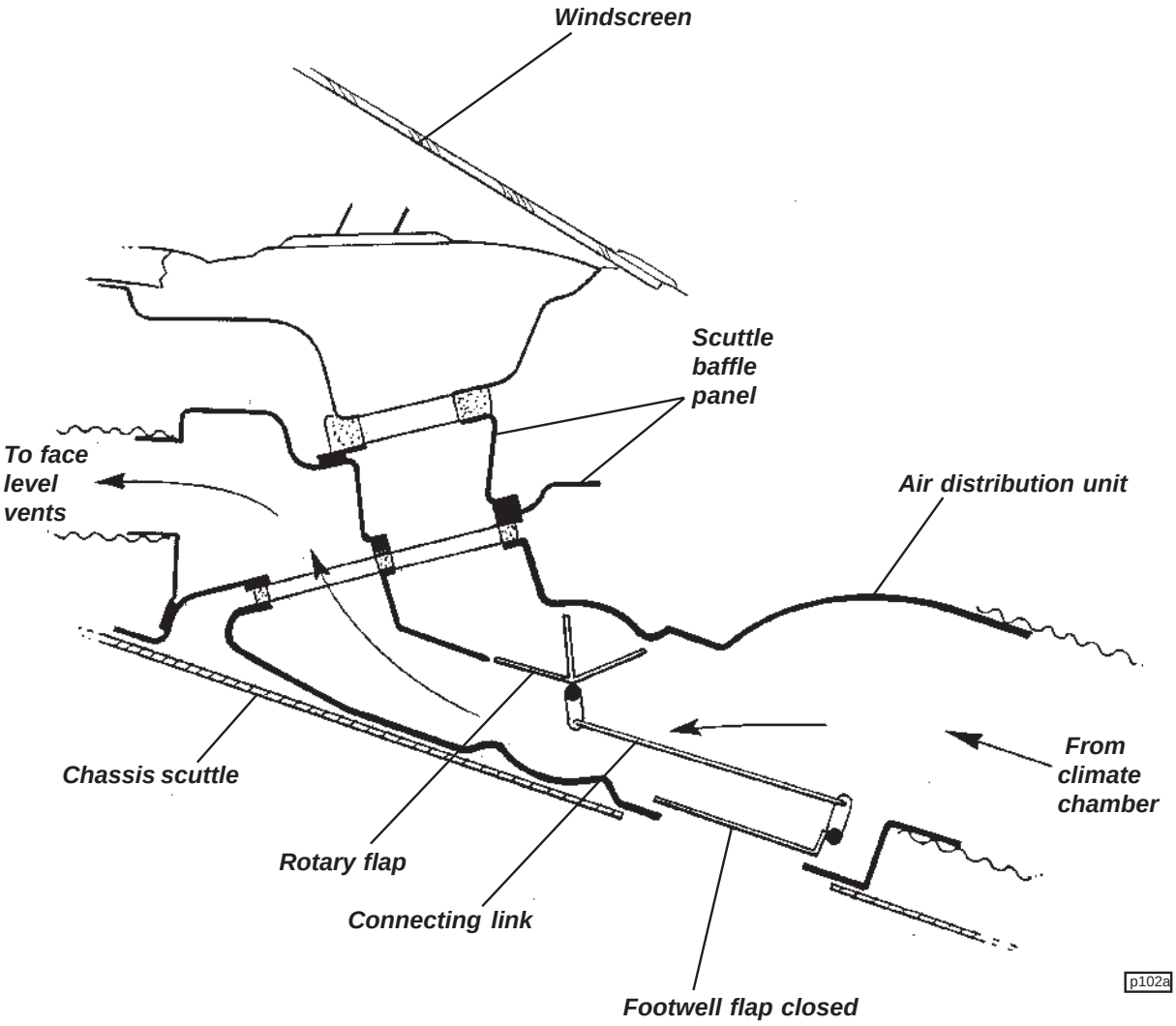

Downloaded from www.Manualslib.com manuals search engine

Footwell:

As the control is turned clockwise from the face level vents symbol towards the footwell symbol, the stepper motor turns the rotary flap to progressively close off the face level vents. A rod connecting the rotary flap to the footwell flap is arranged to open the footwell vents in opposite proportion, until at the footwell symbol, all airflow is directed to the footwells.

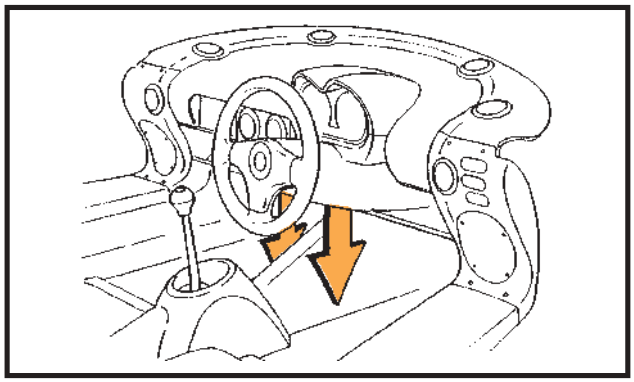

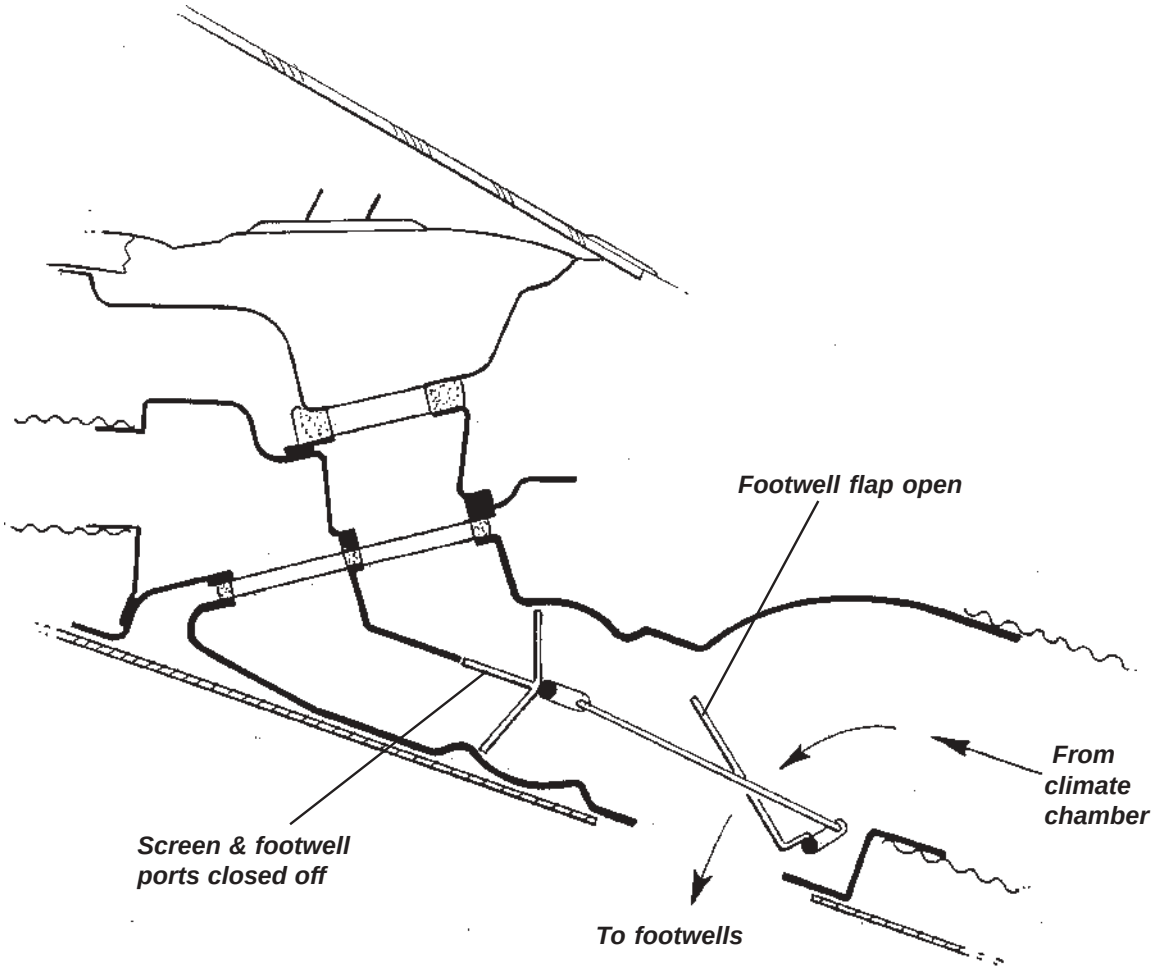

p102b

Downloaded from www.Manualslib.com manuals search engine

Demist:

As the control is turned clockwise from the face level vents symbol towards the footwell symbol, the stepper motor turns the rotary flap to progressively open the windscreen vents. The rod connecting the rotary flap to the footwell flap is arranged to close the footwell vents in opposite proportion, until at the screen symbol, all airflow is directed to the windscreen. Select a warm temperature setting and a suitable fan speed.

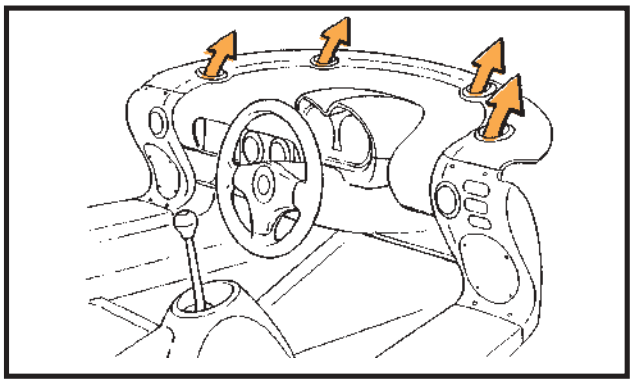

Full Defrost Performance

For maximum defrost performance, turn the distribution knob fully clockwise and select maximum temperature and fan speed. On cars with adjustable windscreen vents, direct the centre pair of screen vents slightly rearwards, and the end pair of vents forwards as shown in the illustration.

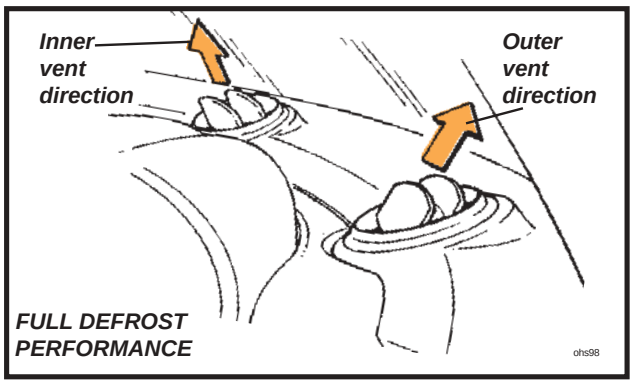

Ventilation Shut-Off

To close off the ventilation, which may be desirable in heavy traffic to reduce the induction of fumes into the car, turn off the fan, turn the distribution control fully counterclockwise to the face level vent position, and manually shut off each of the face level vents.

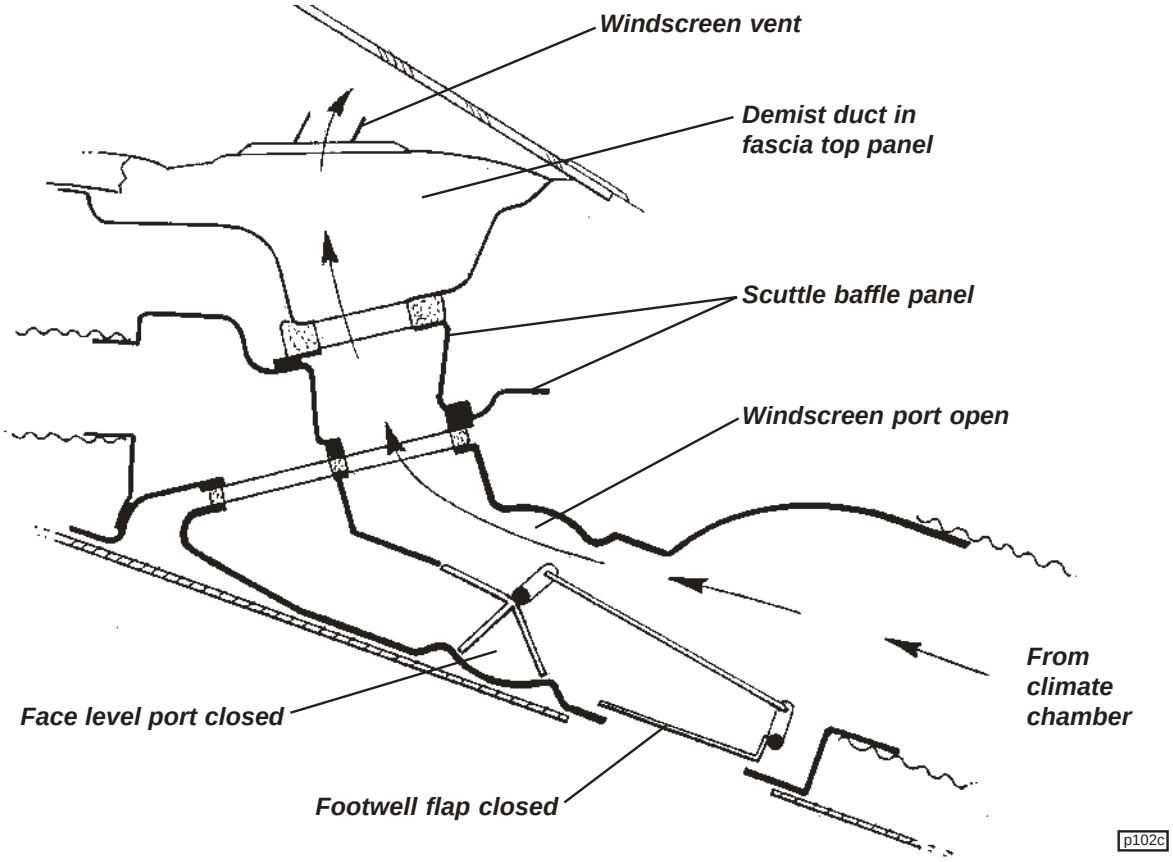

Downloaded from www.Manualslib.com manuals search engine

PL.3 - COOLING FANS & RE-CIRCULATION PUMP

The two cooling fans are fitted beneath the radiator or (with a.c.) condenser/radiator package, and the coolant re-circulation pump is mounted below the header tank. Both the fans and pump are controlled by the engine management ECU using data provided by the engine coolant temperature sensor mounted in the back of the cylinder head.

The cooling fans are switched as a pair, and will operate at half speed (connected in series) when coolant temperature reaches 98°C on rise, and switch off at 94°C on fall. If coolant temperature rises to 103°C, the fans will switch to full speed (connected in parallel), reverting to half speed at 98°C.

The fans will also run at half speed, unless high coolant temperature dictates otherwise, when the a.c. is switched on and the compressor is running, or if the engine management system detects a fault with the inlet air temperature or coolant temperature circuits.

At road speeds in excess of 85 mph (135 km/h), equating to the fan stall speed, all fan functions are switched off.

Heat Soak

In order to help control engine temperature after switching off an engine whose temperature is over 88°C, the ECU will remain powered for a period of 20 minutes to allow heat soak management.

A coolant re-circulation electric pump is mounted below the coolant header tank and is plumbed into the heater supply line. When energised, the pump circulates coolant through the engine and heater system, drawing coolant from the back of the cylinder head, and pumping it through the heater matrix to the heater return pipe and back into the thermostat housing. The pump functions only with ignition off in conditions where the ECU remains live. The pump is then activated at coolant temperatures over 110°C, switching off at 100°C on fall. If temperature should rise to 115°C, the pump will be supplemented by the two cooling fans running at half speed, switching off at 110°C on fall.

Fan Control Module

The cooling fans, re-circ. pump and a.c. compressor are controlled by a relay module mounted to the top of the passenger side wheelarch liner. **Important Note:** The a.c. relay module is identical in appearance to the engine relay module, but the function of the two modules is different and they must not be transposed. The a.c. relay module A117M0038F has a brown label marked YWB100800 and a blue connector moulding; The engine relay module A111E6024F has a white or brown label marked YWB100970 and a black connector moulding. If necessary, use a scalpal blade to slim the centre spigot of a new module connector housing to allow its fitment on an earlier car.

If the ECU receives a coolant temperature sensor signal voltage outside of the acceptable range, a default setting equating to 60°C will be substituted, and the cooling fans activated at half speed as an engine protection strategy.

Downloaded from www.Manualslib.com manuals search engine

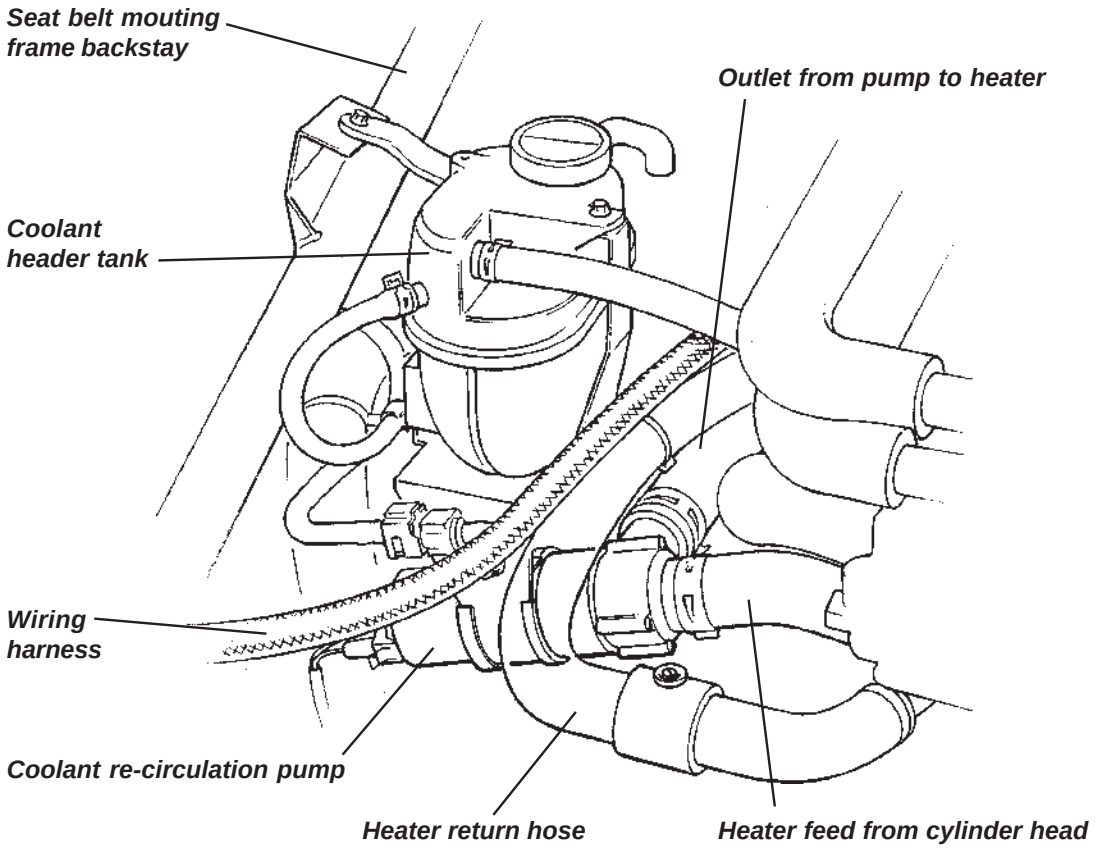

p109b

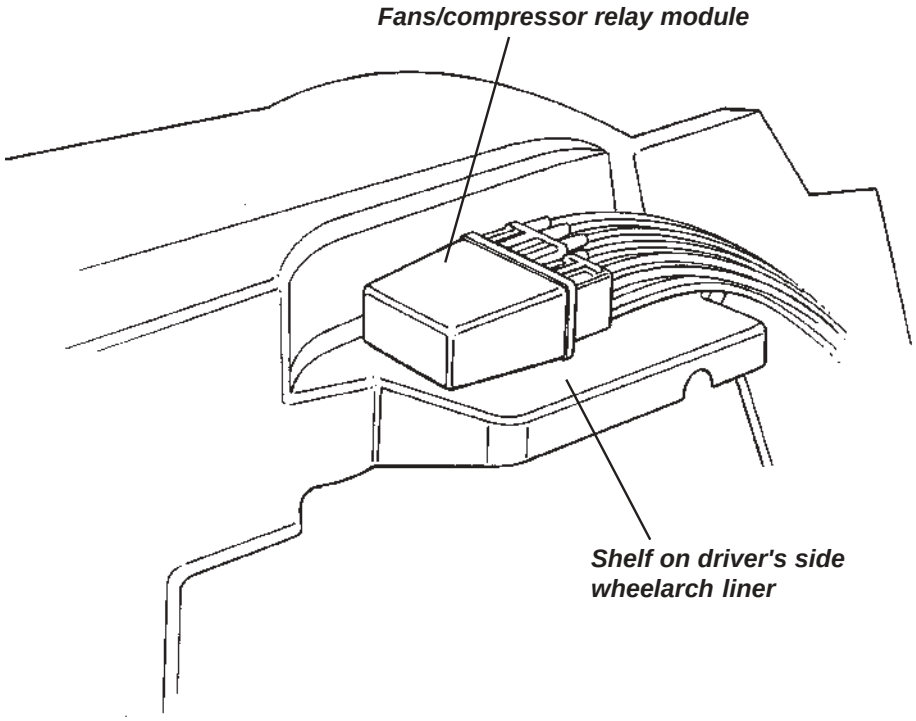

p108

Downloaded from www.Manualslib.com manuals search engine

PL.4 - REFRIGERANT HANDLING

The system is charged with 0.55 kg of refrigerant HFC R134a, and the following precautions MUST ALWAYS BE OBSERVED.

1. On no account should refrigerant ever be discharged to atmosphere - use a refrigerant recovery/recycling station in accordance with the manufacturer's instructions. Filling points on early Elise are located in the front services compartment, and on the Exige and later Elise, ahead of the RH rear wheel, accessible after removal of the wheelarch liner.

2. Standard R134a 'quick fit' connectors are provided in the compressor suction and discharge pipes at the right hand front of the engine bay;
   - the low pressure vapour line port is fitted in the pipe between the evaporator and compressor.
   - the high pressure liquid line port is fitted in the pipe between the compressor and condenser.

3. Heavy concentrations of refrigerant vapour can produce toxic gas if exposed to a naked flame. The gas can also attack metal.

4. Refrigerant drums must never be left open - always ensure the caps are securely fitted.

5. Never transport drums of refrigerant in the passenger compartment of a car.

6. Never expose refrigerant drums to high temperature.

7. Never weld or use a steam cleaner in close proximity to any part of the air conditioning system.

8. Never expose the eyes to vapourised or liquid refrigerant - ALWAYS wear safety goggles and gloves when handling refrigerant.

PL.5 - REFRIGERANT PIPEWORK PRECAUTIONS

The following precautions must be observed when carrying out any work on the refrigerant pipework: Before disconnecting any refrigerant pipework, the refrigerant must first be recovered using suitable equipment connected to the service valves at the right hand front of the engine bay. Ensure that the equipment is suitable for R134a.

1. All replacement components and flexible end connections are sealed when new, and should only be opened IMMEDIATELY PRIOR TO FITTING, AND AT ROOM TEMPERATURE, to prevent condensation of any moisture which may enter when the sealing is removed.

2. Pipes, flexible end connections and components, must be capped immediately they are opened to prevent the ingress of moisture and/or dirt.

3. The receiver-drier should be the LAST component to be connected, to ensure optimum dehydration and maximum moisture protection of the system.

4. All joints should be coated with refrigeration oil before making any connections, to aid seating.

5. Great care must be taken to prevent damage to the pipe fittings and connections, since due to the high pressures involved, a leak can be caused by the slightest imperfection. Always use two spanners of the correct size when releasing or tightening any pipe joint so that the fixed part of the union may be prevented from twisting and damaging the component. This is especially important with the aluminium condenser.

6. All pipes and hoses must be free from any kinking. The efficiency of the system can be impaired by a single kink, or restriction. Flexible hoses should not be bent to a radius which is less than ten times the diameter of the hose.

Downloaded from www.Manualslib.com manuals search engine

Refrigerant Pipework Fixing Torques

Key	Description	Qty	Thread	Pitch	Torque
1	Compressor to engine	3	M8		35 Nm
2	A.C. hoses to compressor	2	M6		10 Nm
3	Bulkhead connector, high pressure	2	3/4 - 16 UNF	1.6	25-30 Nm
4	Bulkhead connector, low pressure	2	1 1/16 - 14 UNS	1.8	35-40 Nm
5	High pressure blow off valve	1	3/8 - 24 UNF	1.1	10-13 Nm
6	High pressure pipe to condenser	1	3/4 - 16 UNF	1.6	25-30 Nm
7	Liquid line to condenser	1	5/8 - 18 UNF	1.4	20-25 Nm
8	Receiver-drier inlet/outlet pipes	2	5/8 - 18 UNF	1.4	20-25 Nm
9	Trinary switch to pipe	1	7/16 - 20 UNF	1.27	15-20 Nm
10	Clamp plate, pipes to expansion valve	1	M6	1	7-9 Nm

Use refrigeration oil only, smear on "o" rings and threads prior to assembly
(Gloves should be worn when handling refrigeration oil - see data sheet)

Refrigerant Pipework 'O' Rings

Key	Description	Size	Part Number
A	Suction line to compressor	18mm o.d.	A120P6002H
B	High pressure line to compressor	15 mm o.d.	A120P6001H
C	Suction line bulkhead connectors and expansion valve to suction line	17mm i.d.	A082P6081F
D	High press. line bulkhead connectors, cond. inlet, exp. valve to evaporator	11mm i.d.	A082P6079F
E	High pressure valve, condenser outlet, rec. drier, inlet pipe to exp. valve	7.5mm i.d.	A082P6078F
F	Evaporator to expansion valve	13.5mm i.d.	A082P6080F

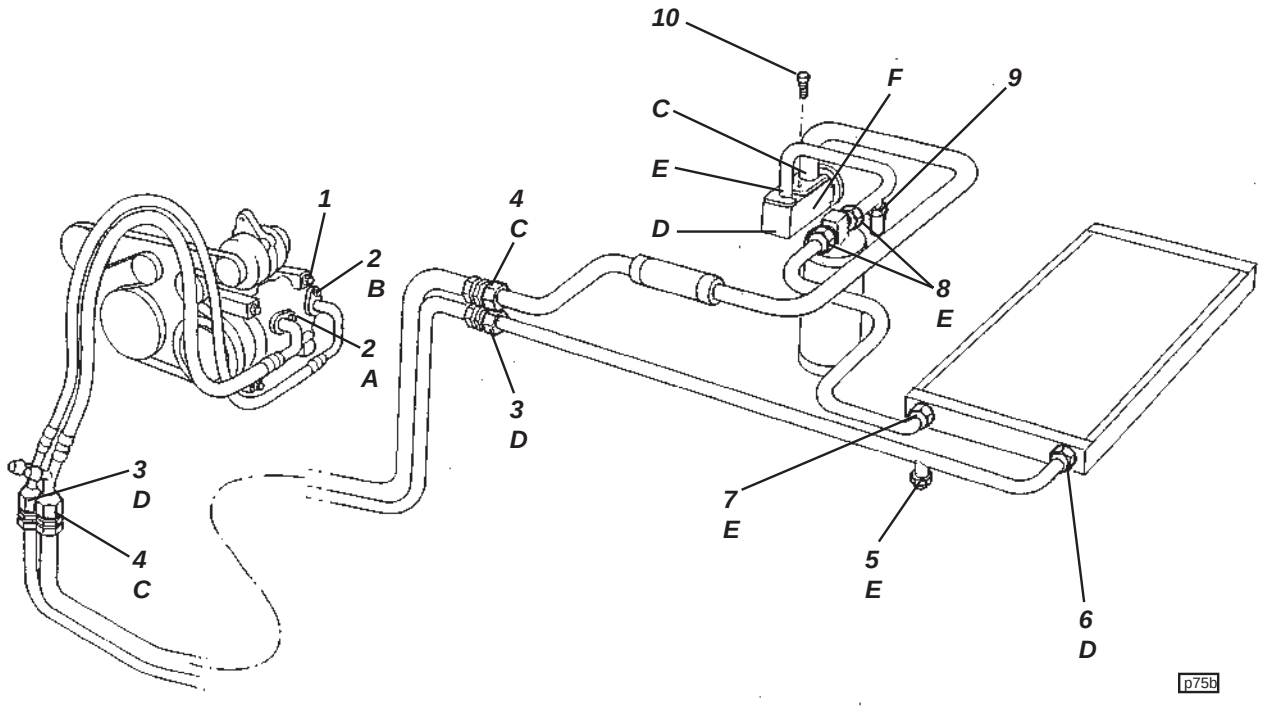

Downloaded from www.Manualslib.com manuals search engine

PL.6 - REFRIGERANT OIL

The internal working parts of the compressor are lubricated by refrigerant oil. This is a special type of oil which has an affinity with the refrigerant, such that a proportion of the oil circulates with the refrigerant, around the whole system. Under normal operating conditions, the oil never needs changing or replenishing, and if the correct procedure for system depressurisation and re-charging is followed, minimal oil will be lost from the system during these operations. If, however, the system suffers a major leak or sudden de-pressurisation, most of the oil held in suspension will be lost as the refrigerant escapes, necessitating the addition of a specified quantity of oil to the compressor on re-assembly (see section PL.7).

If a refrigeration component is to be replaced, the removed item will contain a certain amount of oil, and a corresponding amount of new oil must be added to the system on re-assembly:

Condenser;	30 cm^3
Evaporator;	30 cm^3
Any major pipe or hose;	10 cm^3
Receiver-drier;	30 cm^3

Approved Oils

Use only Denso ND-OIL 8 low viscosity (ISO46) PAG oil or equivalent (Sanden SP10; Four Seasons 59007).

Refrigerant oil absorbs water and should not be exposed to the atmosphere for any longer than is strictly necessary to perform the operation. Never return decanted oil back into the storage container.

Downloaded from www.Manualslib.com manuals search engine

PL.7 - COMPRESSOR

The a.c. compressor is mounted on the left hand side of the cylinder block, beneath the alternator, and is accessible from below.

A single multi-rib serpentine type belt is used to transmit drive from the crankshaft to the water pump, alternator and a.c. compressor, with a slave pulley fitted in place of the power steering pump used in other applications. A hydraulically damped, spring loaded tensioner arm applies tension to the back of the belt, and is maintenance free. The belt itself should be inspected for condition at each service interval, and if it exhibits any evidence of physical damage, cracking, fraying, perishing, abrasion or contamination, it should be replaced. In the case of oil or coolant contamination, the cause must be identified and rectified, and each of the pulleys must be thoroughly degreased before the new belt is fitted.

For further details, refer to section CH in the Engine Repair Manual, but note that only a six-point socket should be used on the cast hexagonal boss on the tensioner arm. The manufacturing draft angle on this component may result in damage being caused by a twelve point socket.

Compressor Removal

1. Remove the compressor drive belt by applying a **six-sided** socket to the cast boss on the tensioner arm to relieve the tension, and slip the belt off the compressor pulley.

2. Recover the refrigerant using equipment connected to the service ports at the right hand front of the engine bay.

2. Remove the engine bay undertray.

3. From beneath the car, release the suction and discharge pipes from the compressor and immediately cap the pipes and compressor ports to prevent ingress of dirt and moisture.

4. Disconnect the compressor clutch harness.

5. Release the three compressor fixing bolts, and remove the compressor from the engine. Retain the compressor for oil quantity measurement if a new unit is to be fitted.

Oil Quantity Adjustment Prior to Compressor Refitment

Refitting Existing Compressor

i) If the existing compressor is to be refitted after normal refrigerant recovery has been performed, a quantity of oil equivalent to that recovered must be added to that already held in the compressor.

ii) If the system has suffered a rapid discharge, caused for example by accident damage, most of the refrigerant oil will have been lost. Drain the remaining oil from the compressor by removing the drain plug and rotating the clutch plate. Add 60 cm^3 of new refrigerant oil (see above) to the compressor before refitment.

Fitting New Compressor

New compressors are sealed and pressurised with nitrogen gas. The sealing caps should be removed only immediately prior to compressor fitment, at which time the gas pressure should be heard to escape as a cap is slowly released. New compressors are supplied with an oil fill of 60 cm^3.

iii) If normal refrigerant recovery has been performed, the new compressor oil should be drained off, and the required oil quantity in the new compressor calculated and added:

- Drain and measure the oil quantity in the ***OLD*** compressor by removing the drain plug and rotating the clutch plate. Quantity = X cm^3
- Oil quantity to be added to new compressor = X + 10 cm^3

iv) If the system has suffered a rapid discharge, caused for example by accident damage, most of the refrigerant oil will have been lost. In this case, drain the new compressor of oil and refill with 60 cm^3.

Downloaded from www.Manualslib.com manuals search engine

Compressor Fitment

1. Fit the compressor to the engine and secure with the three M8 bolts; Tighten to 25 Nm (18 lbf.ft). Using a **six-sided** socket on the tensioner arm, fit the drive belt onto the compressor pulley.

2. Using new 'O' rings lubricated with an approved refrigerant oil, fit the two refrigerant pipes to the compressor and tighten the fixing screws to 10 Nm (7 lbf.ft).

3. Connect the compressor clutch harness.

4. Recharge the system with R134a refrigerant.

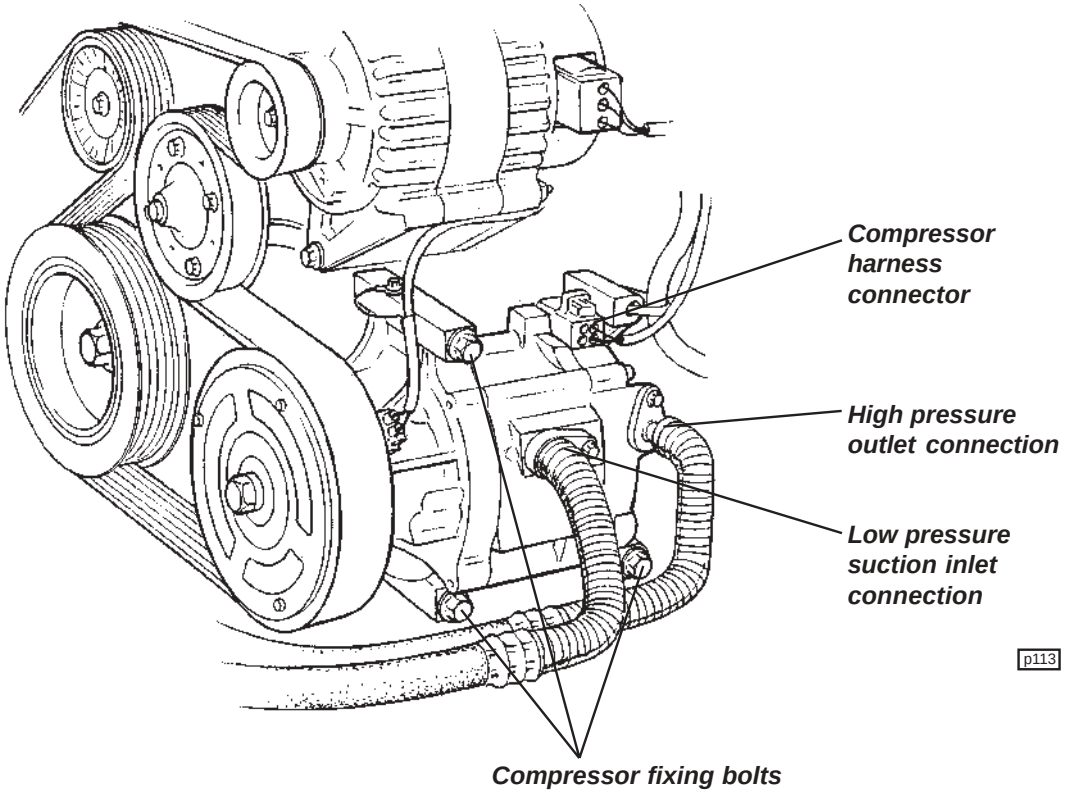

Downloaded from www.Manualslib.com manuals search engine

PL.8 - CONDENSER

The engine cooling radiator, a.c. condenser and cooling fans are secured together as a package and are mounted horizontally, with fans lowermost, on top of the crash structure. The all aluminium condenser is of parallel flow construction, with tanks at each side which direct the refrigerant flow from the front inlet connection successively through 10, 7, 5 and 4 rows, before it emerges from the rear outlet union. Bonded to the front and rear of the condenser are steel channels which incorporate mounting brackets to attach the unit to the lower flanges of the engine cooling radiator, and also to provide mountings for the two cooling fans.

For access to the condenser or cooling fans, the front clamshell must be removed followed by the radiator mounting panel with the complete cooling pack.

1. Remove the front clamshell (see sub-section BR.6).

2. Remove the two air deflector/water shields.

3. Drain the coolant and disconnect the feed and return hoses from the radiator.

4. Unplug the fan harness connector(s).

5. Recover the refrigerant using suitable equipment connected to the service ports at the right hand front of the engine bay.

6. Using two spanners on each connection to avoid twisting the union, release the two refrigerant pipes from the condenser and immediately cap both the pipes and the condenser unions to prevent the ingress of dirt and moisture.

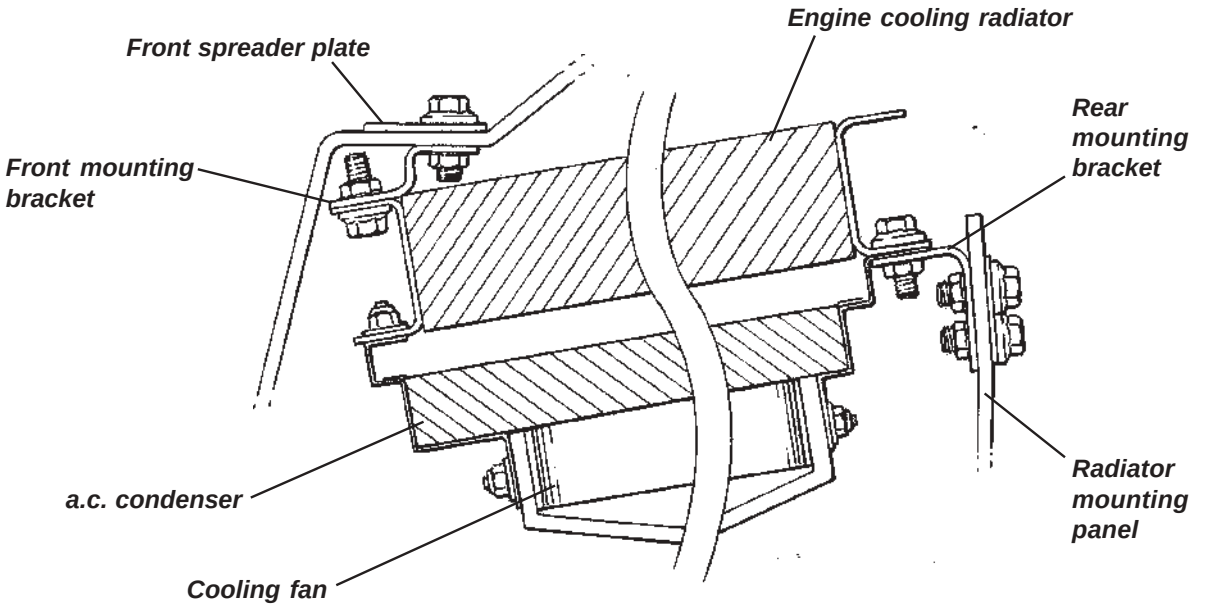

p106

Downloaded from www.Manualslib.com manuals search engine

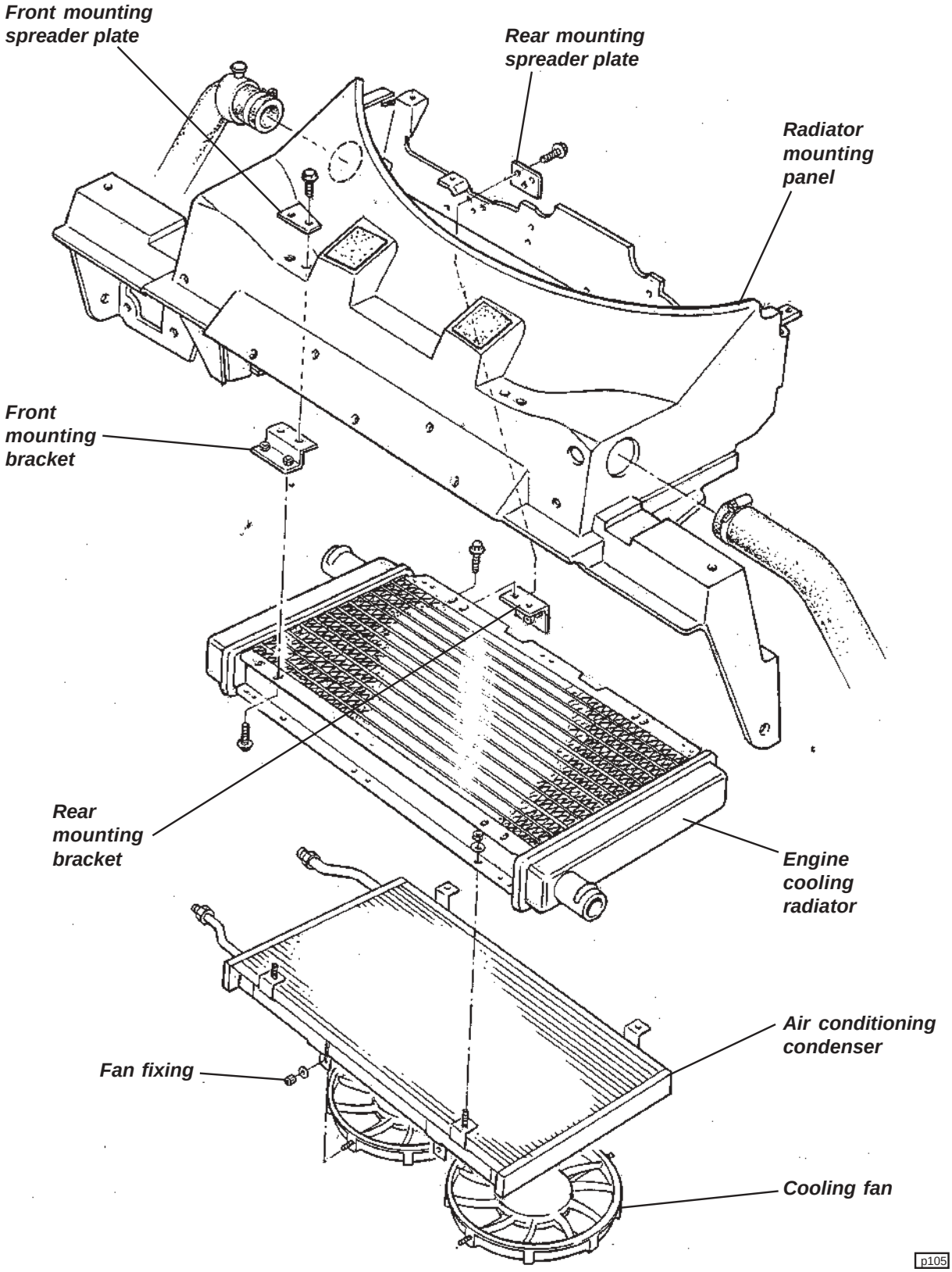

Downloaded from www.Manualslib.com manuals search engine

7. Release the radiator mounting panel from the crash structure and lift away the complete assembly.

8. To remove the radiator pack from the mounting panel, pull out the sealing foam, release the three bolts securing each rear bracket to the panel, and the two bolts fixing each front bracket to the panel. Separate the fans, condenser and radiator as necessary.

9. On re-assembly, note that the two angle brackets securing the rear of the condenser to the radiator duct, are positioned below the condenser flange, and use a spacer washer at the adjacent fixing point to replicate the flange thickness. Ensure that the sealing foam is refitted around the sides and rear of the condenser, and that the spreader plates are fitted on top of the housing at the front fixing points.

10.
- If a new condenser is fitted, add 30 cm^3 of approved refrigerant oil to the system.
- Use new 'O' rings on the pipe connections, and lubricate with refrigerant oil.
- Using two spanners, tighten the condenser inlet connection to 25 - 30 Nm.
- Using two spanners, tighten the condenser outlet connection to 20 - 25 Nm.
- Recharge the system with 0.55 kg of R134a.
- Refill the cooling system (see sub-section KH.3).

PL.9 - RECEIVER-DRIER

If the system has been open to atmosphere for any length of time, e.g. following accident damage or a burst hose or damaged component, the receiver-drier unit must be renewed, and should be the last component to be fitted, and uncapped only immediately prior to connection and recharging.

The receiver-drier is clamped to a mounting bracket at the front of the climate chamber. If the receiver-drier is to be replaced, the refrigerant must first be recovered using suitable equipment connected to the service ports at the right hand front of the engine bay.

- Cap all pipes and ports immediately after disconnection to prevent the ingress of dirt and moisture.
- When reconnecting the pipes, use new 'O' rings coated in an approved refrigerant oil, and tighten to 20 - 25 Nm.

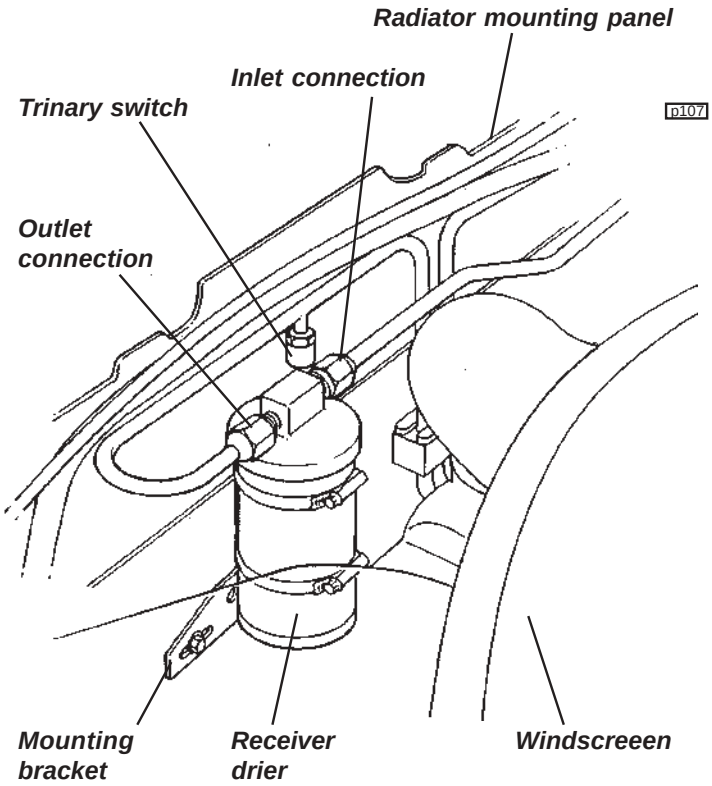

PL.10 - EXPANSION VALVE

The expansion valve is fitted onto the evaporator inlet and outlet pipes above the climate chamber, and is accessible from within the front services compartment. To replace the valve:

1. Recover the refrigerant using suitable equipment connected to the service ports at the right hand front of the engine bay.

2. Release the single M6 screw securing the clamp plate to the top of the expansion valve, and withdraw the plate and both pipes from the valve. Immediately cap the pipes and ports to prevent the ingress of dirt and moisture.

Downloaded from www.Manualslib.com manuals search engine

3. Release the two M5 screws from the counterbored holes in the top of the valve, securing the valve to the evaporator pipes, and withdraw the valve from the pipes. Immediately cap the pipes and ports to prevent the ingress of dirt and moisture.

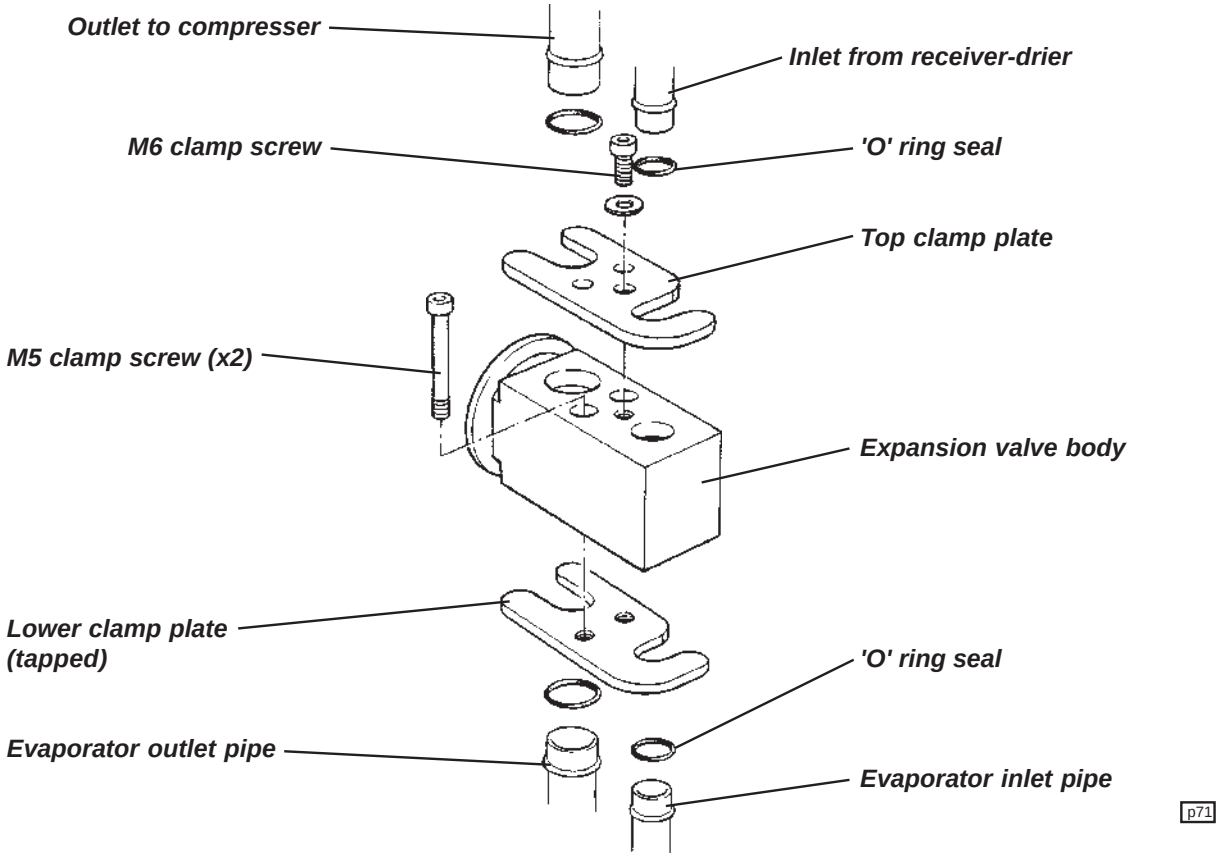

4. Before refitting, renew all the connector 'O' rings, and coat with an approved refrigerant oil.

5. Fit the threaded clamp plate around the evaporator pipes, and secure the expansion valve onto the pipes with the two M5 screws tightened to 5 - 6 Nm.

6. Use the second clamp plate to secure the two pipes to the expansion valve, tightening the single M6 screw to 7 - 9 Nm.

7. Recharge the system with 0.55 kg of R134a.

PL.11 - HEATER/EVAPORATOR/FAN UNIT

The heater matrix and a.c. evaporator are contained within a single housing together with the air blender temperature control flaps. The housing is mounted in the chassis climate chamber where it is clipped to the fan blower unit, and retained by a simple clamp bracket.

Note that the heater/a.c./blower unit is fitted the opposite way round between Rover and Toyota powertrain cars: On 'Rover' cars, the blower unit is on the passenger side, and the air blend actuator on the rear of RHD installations, and in front on LHD. On 'Toyota' cars, the blower is on the driver's side, and the air blend actuator on the front of RHD cars and the rear of LHD.

Downloaded from www.Manualslib.com manuals search engine

To remove heater/evaporator/fan unit:

1. Remove the front clamshell (see sub-section BR.6).

2. Remove the two air deflector/water shields, windscreen washer reservoir and ducting between heater/a.c. unit and air distribution unit.
3. Recover the refrigerant using suitable equipment connected to the service ports at the right hand front of the engine bay.

4. Disconnect the refrigerant pipes as necessary and remove the receiver-drier unit and mounting bracket. Disconnect the outlet pipe from the expansion valve. Cap all pipes and ports immediately to prevent the ingress of dirt and moisture.

5. Disconnect the hoses from the heater matrix and collect escaping coolant.

6. Unplug the wiring harness from the temperature flap motor, a.c. thermostat and fan motor.

7. Remove the clamping bridge retaining the unit into the chassis and release the overcentre clips securing the unit to the fan blower housing. Withdraw the unit from the chassis together with the drain tube.

To refit heater/evaporator/fan unit:

Before refitting the unit, first ensure that the following components are fitted in the chassis:

- Fresh air intake ducting/re-circulation valve assembly, retained in channel at front of chamber by single clamp bracket. Check that re-circ. flap stepper motor harness is connected, and that the moulded plastic water shield is fitted over the actuator.
-
- Recirc. ducting is fitted in rear of chassis climate chamber
- Earth cables are connected to chassis negative post at the left hand side of the chamber.
- Rear circuit brake pipe is fitted between master cylinder and bulkhead connector.

Position the fan housing into the passenger side of the chassis chamber. Fit the drain tube into the base of the heater/evap. unit and use a guide wire or similar to aid routing of the tube through the chassis crossmember via the central aperture at the back of the chamber, as the unit is fitted into the chamber. Engage the lower edges of the fan unit and heater/evap. unit before clamping together with the two overcentre latches. Retain the assembly by fitting the bridging clamp bracket.

Continue re-assembly in reverse order to removal.

PL.12 - AIR DISTRIBUTION UNIT

The airflow distribution unit is mounted on top of the chassis scuttle, sandwiched between the underside of the fascia top/demist duct and the chassis. The unit comprises several plastic mouldings bonded and rivetted together to contain the rotary flap for windscreen/face level vents, and also the footwell flap. The stepper motor for the rotary flap is mounted on the side of the unit.

To Remove

1. Remove the front clamshell (see sub-section BR.6) and washer bottle and wiper mechanism (see sub-section MP.8).

2. Remove the air trunking between the heater/a.c. unit and the distribution unit.

3. Release the fixings securing the heater water pipe to the chassis scuttle.

4. Drill out the rivets securing the distribution unit retaining bracket to the chassis scuttle.

5. Withdraw the unit from beneath the scuttle baffle panel, disconnecting the stepper motor harness plug when access allows.

Downloaded from www.Manualslib.com manuals search engine

6. Refit in reverse order to removal, ensuring that the sealing foam between the unit and baffle panel and on the chassis scuttle is present and in good condition. Secure by re-rivetting the retaining bracket.

PL.13 - REFRIGERANT PIPES

The main feed and return (high pressure liquid and low pressure suction) lines to the compressor take the form of aluminium pipes routed along the outside of the RH chassis rail, such that removal of the body sill panel is required for access to the pipes. Replacement of the pipes is unlikely to be necessary other than as a result of accident damage, in which case the body sill will be replaced in accordance with Service Notes Section BQ.

PL.14 - AIR BLENDER & RE-CIRC. FLAP ACTUATORS

The stepper motor (actuator) for the air temperature blender flap is mounted on the side of the heater/a.c. casing and is secured by two screws. A moulded plastic cover is hooked over the actuator to provide protection from direct water contamination. On installations where the actuator is on the rear of the unit (RHD Rover powertrain; LHD Toyota powertrain), access to the actuator requires the unit to be removed from the chassis (see sub-section PL.12).

With the heater/a.c. unit removed, pull off the moulded water shield and release the two fixings securing the actuator to the casing. The nuts are accessible inside the casing via the air outlet aperture, but the air blender flap may need to be moved to allow access to both nuts. In order to allow flap movement, the flap must be mechanically disconnected from the motor by unclipping the actuator outer cover and sliding a drive gear off its shaft.

On installations where the actuator is on the front of the unit (LHD Rover powertrain; RHD Toyota powertrain), and the car is **not** fitted with air conditioning, the actuator is accessible with the unit 'in-situ'. Remove the front clamshell (sub-section BR.6), release the harnesses from the the front edge of the climate chamber and tie back the harnesses and water hoses to allow optimum access to the actuator. Pull off the moulded water shield, unclip the actuator outer cover and slide off a drive gear to allow the flap to be moved for access to the two fixing nuts inside the casing. To aid reassembly, it is recommended to glue the two fixing spacers in position.

The re-circulation flap actuator on both RHD and LHD cars is accessible only with the heater/a.c. unit removed. If this should occur, the re-circ. flap actuator water shield should be fitted (if not already present) by withdrawing the re-circ. flap assembly from the channel in the front of the climate chamber, hooking the water shield over the actuator and refitting into the chassis, noting that the actuator lead is looped downwards to prevent water tracking along the lead and into the actuator.

Early cars built before May 2004 will benefit from the fitment of an extended clamshell gutter (if not already fitted). On later cars, the fettling of the clamshell was revised to prevent water spilling directly into the actuator area.

Parts Required	Part Number	Qty
Gutter Extension Panel, RHD	A117B0703K	1
Gutter Extension Panel, LHD	A117B0704K	1

1. Remove both front body access panels, and the two louvre panels. Remove the two air deflector panels to which the louvre panels attach.

2. The rear of the radiator is secured by two pairs of screws along the top rear edge. Release the inboard screw on each side.

3. Before attempting to install the new gutter extension panel, protect the top surface of the radiator with a rigid plastic sheet or similar to avoid damage to the delicate finning. Manoeuvre the gutter extension panel into the underside of the clamshell spine, and retain with the two radiator fixing screws. Note that the panel incorporates a hot air dam for the spine area.

4. Refit the two air deflector panels, the louvres and the access panels.

Downloaded from www.Manualslib.com manuals search engine

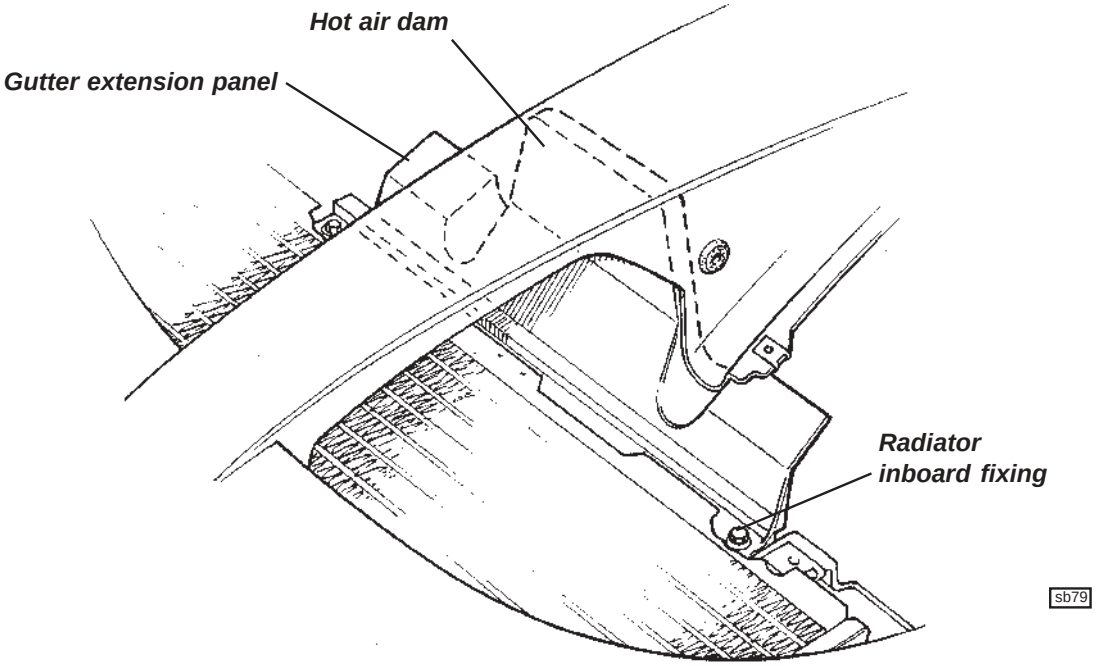

Downloaded from www.Manualslib.com manuals search engine

CLUTCH

SECTION QH

	Sub-Section	Page
General Description	QH.1	3
Clutch Pedal	QH.2	3
Hydraulic Release System	QH.3	3
Clutch Assembly	QH.4	6

Downloaded from www.Manualslib.com manuals search engine

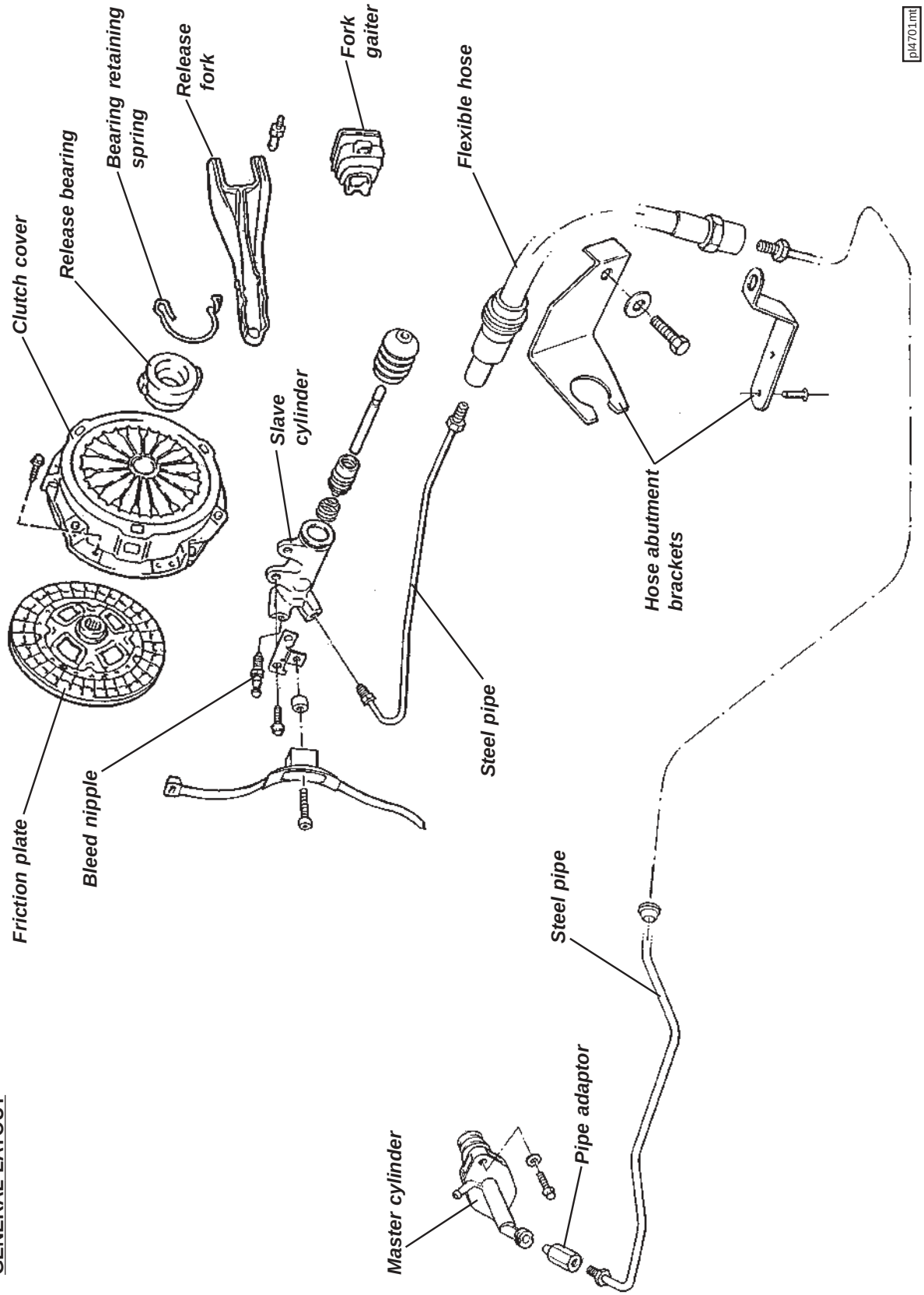

GENERAL LAYOUT

Downloaded from www.Manualslib.com manuals search engine

QH.1 - GENERAL DESCRIPTION

The driving element of the clutch assembly consists of the rear face of the engine flywheel, and a pressure plate fixed to the flywheel via the spring diaphragm clutch cover assembly. The driven element, is a single, dry, double sided friction plate, splined to the gearbox input shaft, and interposed between the flywheel and pressure plate. The diaphragm spring in the clutch cover clamps the friction plate between the pressure plate and flywheel to provide the drive connection between engine and gearbox. The gearbox input shaft, on which the friction plate is free to slide axially, is 'overhung' from the gearbox, with no spigot bearing in the rear end of the crankshaft.

The hydraulic clutch release mechanism uses a master cylinder fixed to the pedal box, and a slave cylinder bolted directly to the transmission case. The master cylinder is connected to the fluid reservoir of the brake master cylinder, and uses a steel pipe routed along the outside of the LH chassis side rail to connect with the slave cylinder via a flexible hose. The slave cylinder operates a release fork which pivots on a ball end fulcrum pin and presses the release bearing against the inner ends of the diaphragm spring fingers, which pivot about their fulcrums and relieve the clamping force applied to the pressure plate via the diaphragm outer edge. The release bearing slides on a guide sleeve surrounding the gearbox input shaft. A preload spring inside the slave cylinder applies light pressure to the release lever in order to ensure that contact between the release bearing and diaphragm spring fingers is maintained.

No routine adjustment of the clutch or release mechanism is required. The clutch slave cylinder is self adjusting, with the 'rest' position of the piston dependent on the thickness, or degree of wear, of the friction plate. As wear of the friction plate takes place, and its thickness is reduced, the slave cylinder piston is pushed progressively further back on the return stroke with fluid being returned to the master cylinder reservoir.

QH.2 - CLUTCH PEDAL

The clutch pedal is machined from an aluminium alloy extrusion which is common to the brake and throttle pedals, with an extruded footpad keyed, bonded and rivetted to the bottom of the pedal. Synthetic 'top hat' bushes are used to provide maintenance free articulation on the steel pivot shaft, with a pair of synthetic bearing rings supporting a cylindrical steel trunnion to actuate the master cylinder pushrod. Note that the two synthetic bearing rings may be replaced with the pedal 'in-situ', by using a suitable bolt with clamp washers to press the rings into position. Each bush has an outer diameter chamfer at one end to aid insertion.

The master cylinder pushrod is captive in the end of the master cylinder and is screwed fully into the pedal trunnion. With the clutch pedal released, there should be a clearance between the pedal and the pedal box in order to allow the master cylinder to 'top out'. Conversely, the pedal should contact the floor before the cylinder 'bottoms out'.

QH.3 - HYDRAULIC RELEASE SYSTEM

Master Cylinder

The clutch master cylinder is mounted on the pedal box, and is accessible from within the front services compartment. The cylinder is not equipped with its own fluid reservoir, but instead is linked via hose to the adjacent brake fluid reservoir. There is no provision for any servicing of the master cylinder, and if found to be faulty, the unit should be replaced.

To replace the master cylinder:

- Clean the master cylinder and surrounding area with methylated spirit. **Do not use petrol or paraffin.**
- Take all necessary precautions to guard against contamination of painted surfaces with brake fluid.
- Disconnect and immediately plug and cap the hose connection to the fluid reservoir, and the output pipe connection.
- From inside the footwell, remove the two bolts securing the cylinder to the pedal box. Withdraw the cylinder from the front services compartment.
- To refit, reverse the removal procedure, taking care to feed the pedal pushrod through the dust boot and into the end of the master cylinder as the cylinder is positioned. Tighten the outlet pipe connection to 20 - 24 Nm and bleed the hydraulic system of air.

Downloaded from www.Manualslib.com manuals search engine

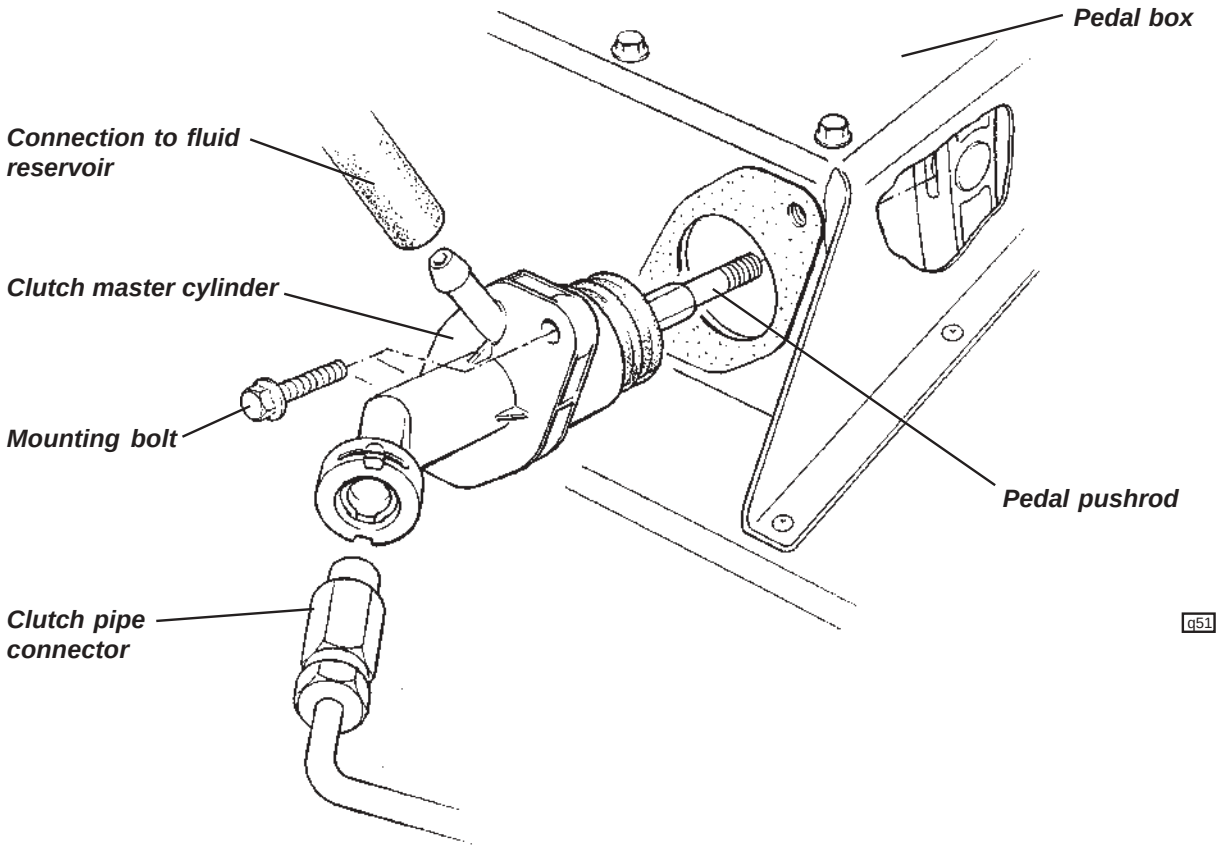

Slave Cylinder

The slave cylinder is secured by two bolts directly to the clutch housing on the forward side of the unit, and operates the clutch fork by a fixed length pushrod. A bleed nipple is provided by which to bleed air from the hydraulic system.

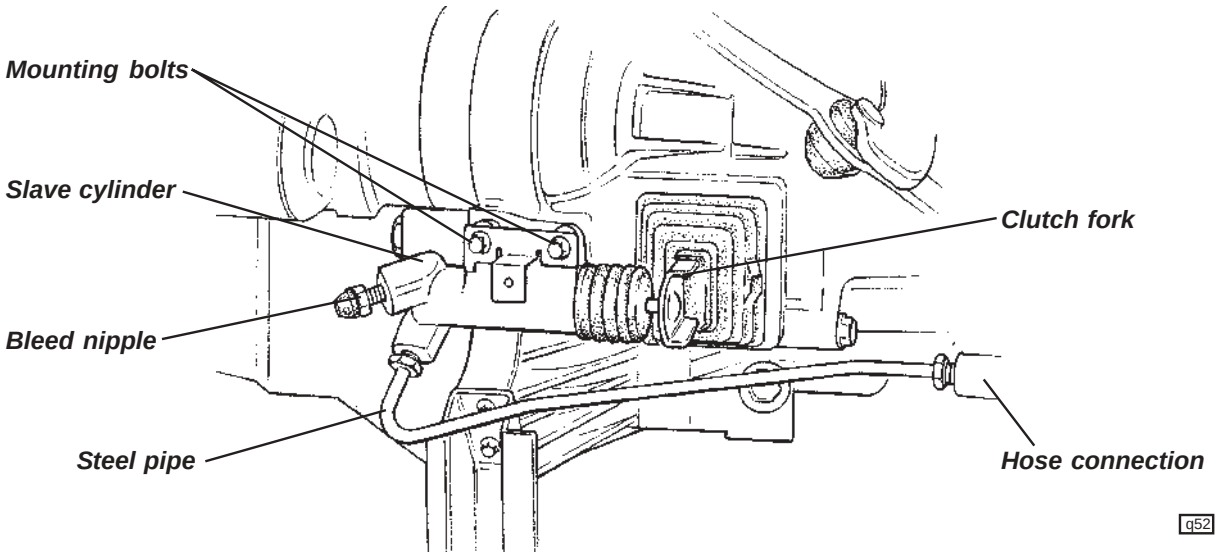

Downloaded from www.Manualslib.com manuals search engine

To replace the slave cylinder:

- Clean the slave cylinder and surrounding area with methylated spirit. **Do not use petrol or paraffin.**
- Take all necessary precautions to guard against contamination of painted surfaces with brake fluid.
- Unscrew the pipe union nut from the slave cylinder and drain the hydraulic fluid into a suitable container. Cap both pipe and cylinder port to limit fluid loss and prevent dirt ingress.
- Remove the two cylinder retaining bolts and withdraw the cylinder and pushrod assembly.
- Remove the cylinder boot and pushrod.
- Tap the cylinder or use a low pressure airline to remove the piston and spring from the cylinder. **CAUTION - Use a workshop towel to protect against hydraulic fluid spray, and protect painted surfaces from contamination.**
- Thoroughly clean the cylinder bore using hydraulic fluid. If any scoring, corrosion, damage or wear is evident, the cylinder assembly should be renewed.
- When refitting the piston and spring, use Lithium soap based glycol grease on the piston and seal before carefully inserting the spring and piston into the cylinder.
- Fit the pushrod into the boot and the boot to the cylinder.
- Fit the cylinder with the tie wrap bracket to the clutch housing, and torque the two fixing bolts to 12 Nm.
- Fit the hydraulic pipe to the slave cylinder and torque to 15 Nm.
- Bleed the hydraulic system and tighten the bleed nipple to 8.4 Nm.

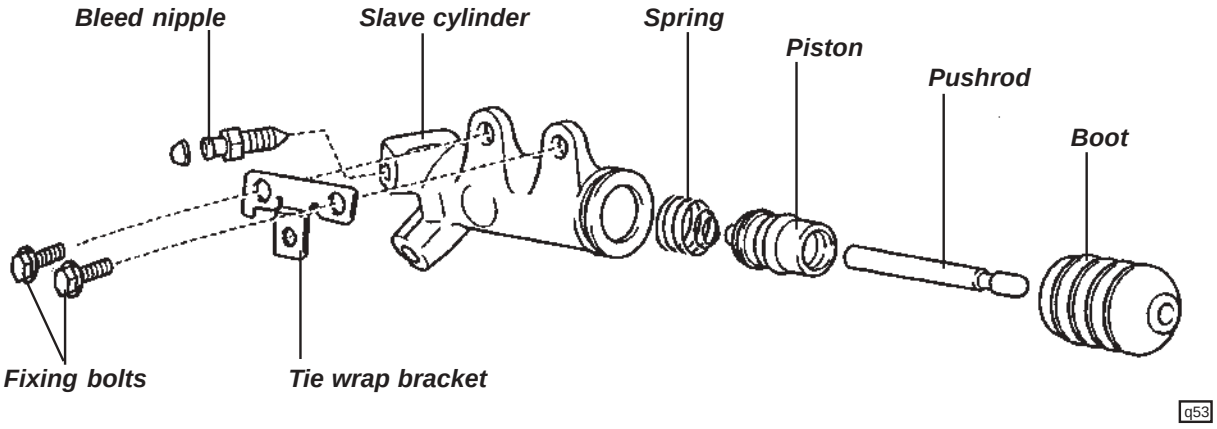

Hydraulic Pipe

A rigid steel pipe is used to convey the hydraulic fluid from the master cylinder to the left hand front corner of the engine bay. The pipe is routed through the dash baffle panel and down the LH 'A' post to run along the outside of the chassis LH main siderail, within the composite sill member, clipped to the heater pipe. The pipe terminates at a bracket rivetted to the rear end of the chassis siderail, where it connects to a flexible hose secured at its other end to a bracket on the clutch housing. A short steel pipe links this joint to the clutch slave cylinder, which uses a 'quickfit' push-in connector to aid production line assembly.

Downloaded from www.Manualslib.com manuals search engine

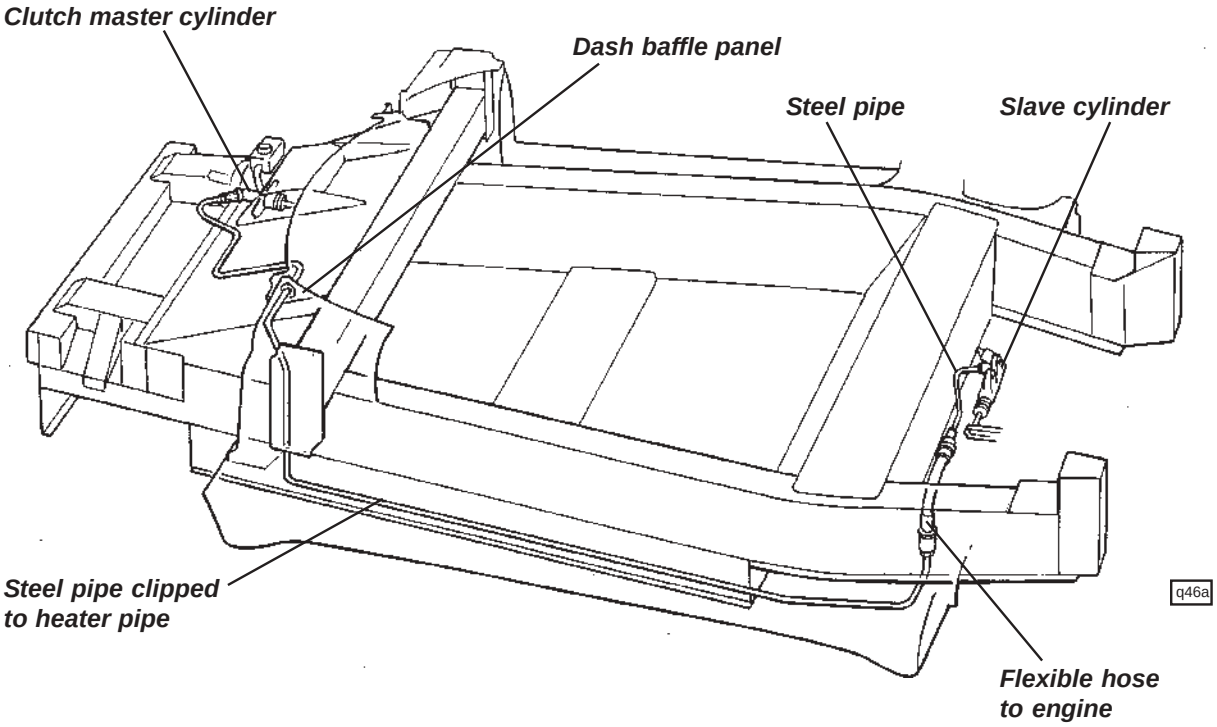

QH.4 - CLUTCH ASSEMBLY

The clutch assembly comprises the friction plate, clutch cover assembly (pressure plate/diaphragm spring/cover) and release bearing. For access to the clutch assembly, the engine and transmission must be separated.

Removal of clutch assembly:
The transmission may be removed from below:

1. Remove the LH rear suspension assembly (refer to sub-section DH.3), both driveshaft assemblies (refer to sub-section FJ.4) and the exhaust system.

2. Disconnect the clutch release fork, gearchange cables, earth braid and reverse light switch.

3. The engine must be supported to allow the engine and transmission mountings to be disconnected and the power unit tilted as necessary to allow the transmission to be withdrawn. The clutch bell housing is secured to the engine by 8 bolts as shown overleaf.

4. Matchmark the clutch cover to the flywheel before progressively loosening each clutch cover bolt half a turn at a time until clutch cover spring pressure is released. Withdraw the cover from the flywheel dowels taking care not to allow the friction plate to drop.

5. Pull the release fork off the fork pivot ball, and withdraw fork and release bearing from the transmission.

Inspection
1. *Clutch cover:* Check the surface of the pressure plate for scoring or discolouration through overheating. Check the fingers of the diaphragm spring for excessive wear at the release bearing contact surface. If any fingers are indented to a width greater than 6mm, or a depth of 0.5mm, the cover assembly should be renewed. If the cover is accidentally dropped, the setting or balance of the assembly could be disturbed. Replacement of the cover is recommended.

Downloaded from www.Manualslib.com manuals search engine

2. *Friction plate:* Check the cush drive springs for breakage or cracking of the hub. Examine the condition of the friction material for signs of oil contamination, scorching, or any other damage. Using vernier callipers, measure the depth of the rivet heads below the surface of the friction material. Minimum depth: 0.3mm.
   With the friction plate mounted on its splines, check the run-out at the outer edge of the friction surface. Maximum run-out: 0.8mm.
   If addressing symptoms of clutch judder, or if any of the above inspections are not passed, renew the friction plate.

3. *Release bearing:* Check the bearing for discernible play, noise or rough feeling, and renew if there is any doubt.

4. *Flywheel:* Using a dial test indicator, measure the axial run-out at the outer edge of the flywheel drive surface.
   Maximum runout: 0.1mm.
   If necessary, renew the flywheel. When fitting the flywheel:
   - progressively tighten the eight fixing bolts in a diametrically opposite sequence, to 49 Nm.
   - mark the angular position of each bolt head, and further tighten each bolt in a diagonally opposite sequence an additional 90°.

<u>Refitting clutch assembly</u>

1. Using a universal type centralising mandrel, position the friction plate with the 'flatter' side towards the flywheel, and fit the clutch cover onto the flywheel dowels with the match marks aligned (if applicable).

2. Fit the clutch cover retaining bolts finger tight and monitor friction plate centralisation as the bolts are progressively tightened in a diagonally opposite sequence to 19 Nm.

3. Using a dial test indicator, measure the diaphragm spring tip height variation. Maximum variation: 0.5mm. If necessary, use a special clutch tool to achieve the specification.

4. If the release fork pivot ball had been removed, refit and tighten to 37 Nm.

5. Apply sparing quantities of Molybdenum Disulphide (MoS_2) grease to the contact points of the release fork fingers, release fork pivot, fork retaining spring and pushrod socket. Also apply sparingly to the transmission input shaft splines.

6. Fit the release bearing and fork together, and position in the clutch housing with the fork retained on the pivot ball by its retaining spring. Fit the dust boot into the housing aperture.

7. Refit the engine to the transmission in reverse order to removal, tightening the clutch housing bolts as follows:

M12 x2;	Upper	64 Nm
M10 x2;	RH side	37 Nm
M10 x2;	Starter Motor	37Nm
M10 x2;	Sump	23 Nm

Illustration overleaf.

Downloaded from www.Manualslib.com manuals search engine

Clutch housing to engine fixings - viewed from gearbox side

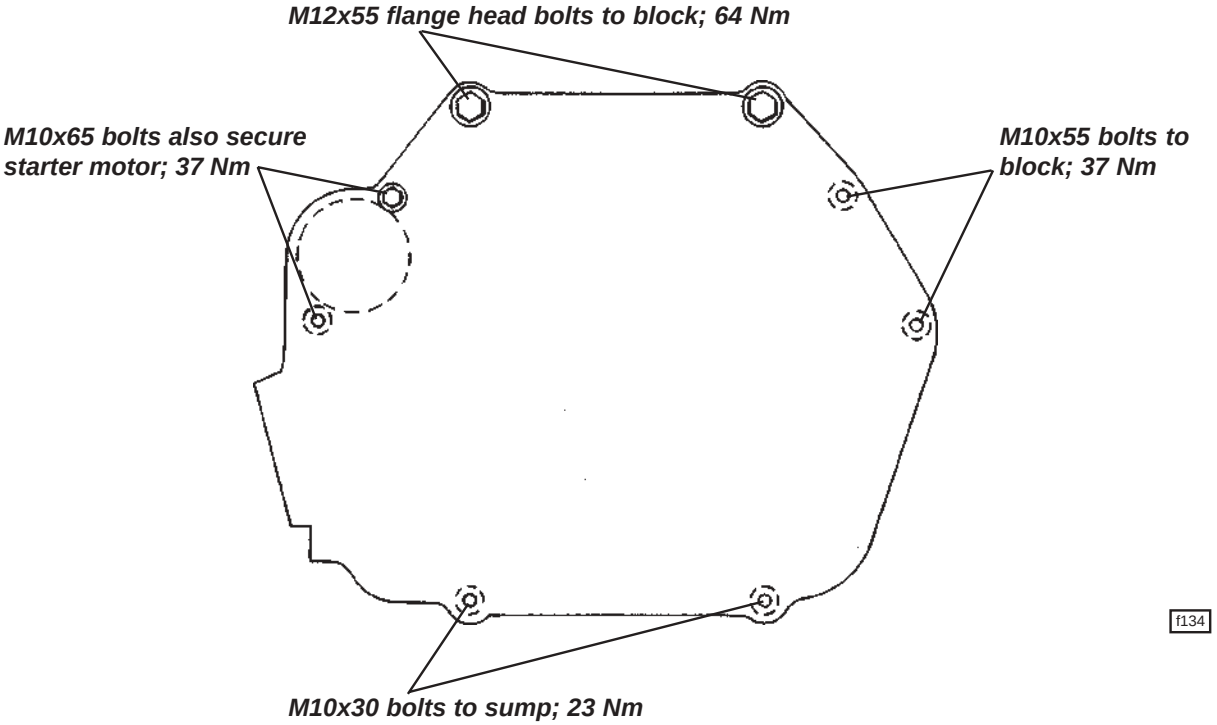

Downloaded from www.Manualslib.com manuals search engine

AIRBAG SYSTEM

SECTION WD - ELISE NORTH AMERICA

	Sub-Section	Page
General Description	WD.1	3
Airbag Tell Tale	WD.2	3
Data Link Connector	WD.3	3
Trouble Codes	WD.4	4
Lotus Scan Tool	WD.5	4
Safety Precautions, Shipping, Storage & Disposal	WD.6	6
Theory of Operation	WD.7	8
Sensor & Diagnostic Module (SDM)	WD.8	10
Driver Airbag Module	WD.9	10
Rotary Connector	WD.10	11
Passenger Airbag Module	WD.11	13
Seat Belt Pre-tensioners	WD.12	14

Downloaded from www.Manualslib.com manuals search engine

WD.1 - GENERAL DESCRIPTION

The Lotus Elise for USA markets, introduced for 2005 model year, is equipped with a driver and passenger frontal airbag system, which includes pyrotechnic seat belt pre-tensioners for both the driver and passenger. The airbag Supplementary Restraint System (SRS) is supplemental to the seat belts, and does not render the seat belts redundant. Seat belts have proven to be the single most effective safety device, and should be worn at all times by both driver and passenger, no matter how short the journey. Properly worn seat belts also ensure that the seat occupant is in the best position for full effectiveness of the airbag.

WARNING: Airbags inflate with great force, in a fraction of a second, and if a vehicle occupant is too close to the airbag (less than 10 inches {250 mm}) or incorrectly positioned, they could be killed or seriously injured.

The SRS is designed to operate when the vehicle is involved in a frontal, or near frontal collision, and the impact (rate of deceleration) as detected by a vehicle mounted sensor, is sufficient to warrant airbag and seat belt tensioning protection to both occupants. The airbag for the driver is housed in the centre of the steering wheel, and that for the passenger in the front of the fascia. When triggered, both bags inflate in a fraction of a second to form a cushion for the driver's and passenger's upper bodies. The bags then deflate very rapidly to minimise any obstruction to the driver. Initiated at the same time as the airbags is a pyrotechnic device on each seat belt reel assembly, which uses a rack and pinion mechanism in order to apply a tightening force to the belt reel and remove any slack from the belt. The force sustained by the belt and its user is then controlled by a torsion bar within the belt reel to limit the deceleration force to which the occupant is subjected.

Note that the SRS will deploy only in moderate to severe frontal and near frontal collisions, and is not designed to be triggered in rollover, rear or low speed frontal collisions, or in some types of side impacts.

The system incorporates a self-diagnostic facility, which continuously monitors the SRS electrical circuits for faults, and if necessary, lights a tell tale lamp in the instrument cluster. Most components of the SRS will require replacement after an airbag deployment.

WD.2 - AIRBAG TELL TALE

A tell tale lamp in the instrument cluster will light for a few seconds following ignition switch on, and then go out. If the lamp remains lit, or comes on at any other time, a fault in the airbag system is indicated.

WARNING: If the airbag tell tale does not operate as described above, a fault in the SRS system is indicated. The airbags may not inflate correctly or at all, or may inflate without warning. The system should be interrogated using the Lotus Scan tool, and diagnosed and rectified without delay.

WD.3 - DATA LINK CONNECTOR (DLC)

In order to provide for communication with the SRS Sensing and Diagnostic Module (SDM), the Lotus Scan tool may be plugged into the special 16 terminal harness connector socket, known as a Data Link Connector, located off the main harness and accessible from the passenger footwell. Communication with engine management and anti-lock brakes is also available via this connector.

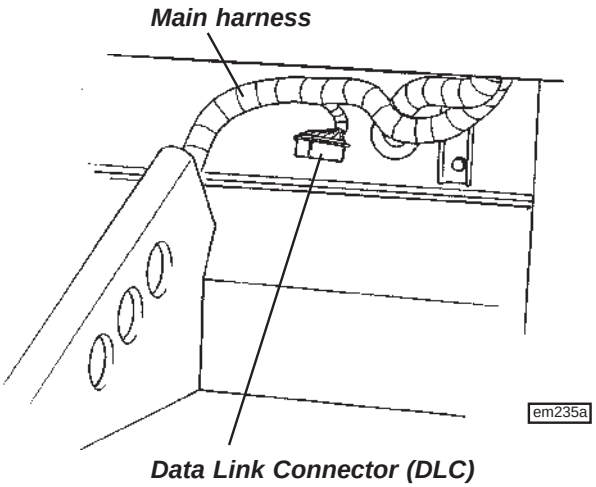

Downloaded from www.Manualslib.com manuals search engine

WD.4 - TROUBLE CODES

All the time the ignition is switched on, the Sensing and Diagnostic Module (SDM) continuously monitors the resistance of various parts of the SRS electrical circuit, and compares these values with pre-programmed tolerance bands to enable it to recognise 'faults' in the system and light the airbag tell tale lamp in the instrument cluster. If such a fault is detected, the SDM stores a 'Trouble Code' for that particular type of fault in its memory.

i). Current (Present) Codes - Faults that are currently being detected. Current codes are stored in the SDM Random Access Memory (RAM), which will be cleared if the vehicle battery is disconnected.

ii). History (Not present) Codes - All faults detected since the last time faults were cleared from the memory using the Lotus Scan tool. History codes are stored in the SDM Electronically Erasable Programmable Read Only Memory (EEPROM) and are not cleared if the battery is disconnected.

Vehicle crash data is also stored in coded form in the SDM and is not erasable. New SDMs are supplied only against V.I.N. and on exchange with the old unit.

WD.5 - LOTUS SCAN TOOL

In order to provide for communication with the airbag SDM, engine management system ECU and anti-lock brake system, a hand held electronic scanner 'Lotus Scan 2' (part number T000T1418F), may be plugged into the Data Link Connector (see earlier)

Amongst the operations available using the 'Lotus Scan 2' tool are:

- Reading of Trouble Codes
- Clearing of Trouble Codes
- Reading live data

Operating instructions are provided with the tool.

Important Note

The power supply transformer is used for overnight charging of the printer, and also for powering the Scan 2 tool during software downloading from a PC (personal computer). For the software download operation, the Scan tool requires a power supply from the mains via the transformer and an inverter. Two types of inverter have been used; early kits used an adaptor lead to plug into the bottom end of the Scanner tool. Later kits use an adaptor plug fitting into the top end of the scanner.

When charging the printer, **it is most important that the inverter is NOT used**, or damage to the transformer may be caused. Incorrect connection is possible only with the early type adaptor lead, with which extra care should be exercised.

1. Reading data from vehicle

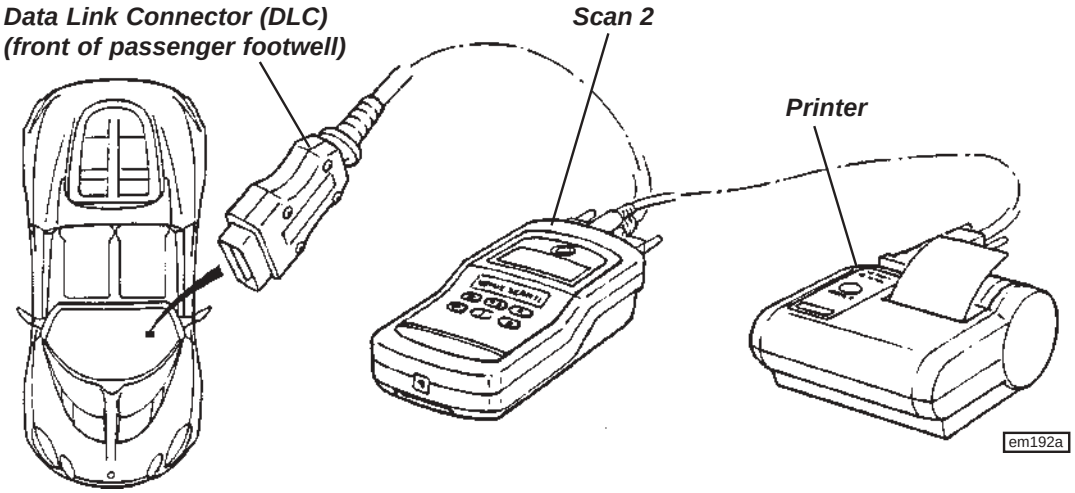

Downloaded from www.Manualslib.com manuals search engine

2. **Downloading software from P.C.**

With early type adaptor lead

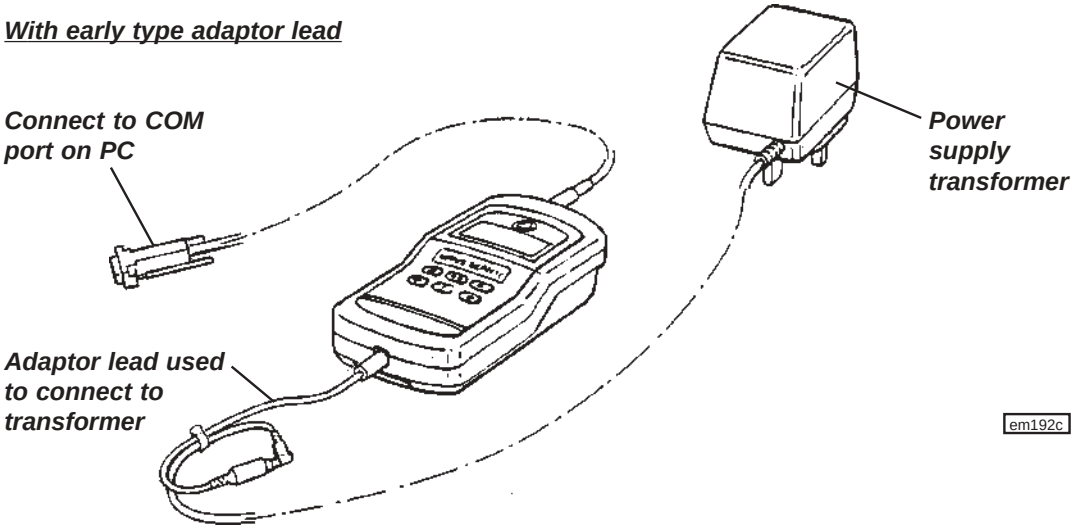

With later type adaptor

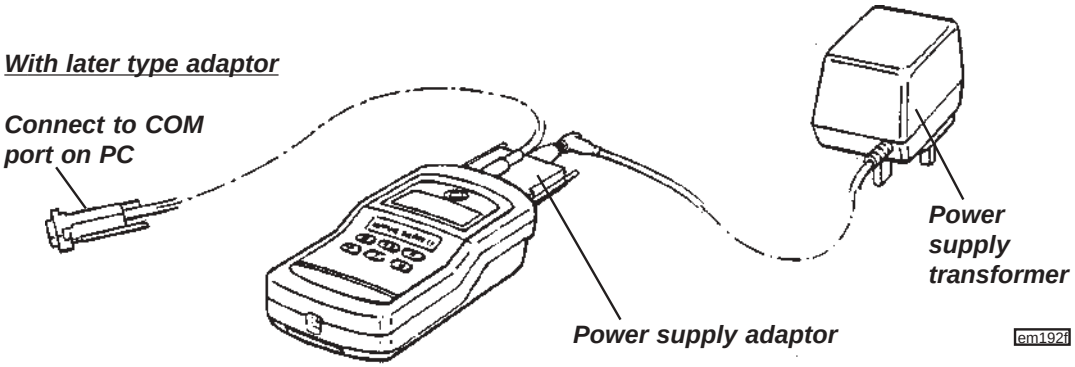

3. **Charging printer**

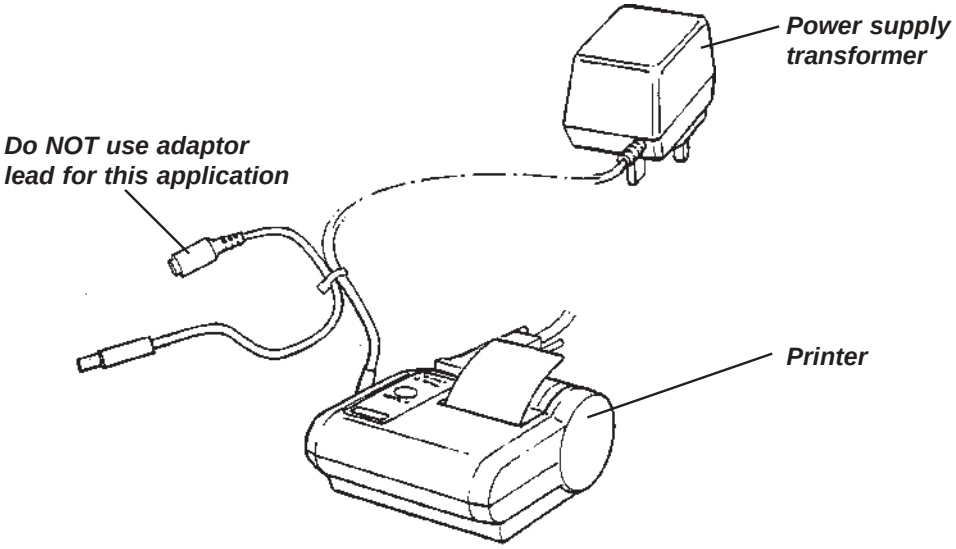

Downloaded from www.Manualslib.com manuals search engine

WD.6 - SAFETY PRECAUTIONS, SHIPPING, STORAGE & DISPOSAL

WARNING: The SDM can maintain sufficient voltage to cause an airbag deployment for up to 20 seconds after the battery has been disconnected. Before working on the airbag system, or in close proximity to an airbag, first take the following precautions to temporarily disable the airbag system:

1. Turn off the ignition.
2. Before disconnecting the battery, use the Lotus Scan tool to read any stored trouble codes.
3. Disconnect the negative (earth) lead from the battery and tape back to ensure that no contact with the battery negative terminal can be made.
4. Wait for 30 seconds.
5. If working on or near the steering wheel, locate the yellow harness connector alongside the steering column near the column upper fixing. Unplug this connector. Note that the connector is fitted with 'shorting bars' which automatically interconnect the high and low terminals of the airbag to prevent accidental deployment caused by a voltage differential.

When service work has been completed, reconnect the harness plug and secure with its locking feature, and reconnect the battery. Ensure the airbag tell tale lights for a few seconds with ignition and then goes out.

Storage

- Airbag modules and SDMs should not be stored at temperatures above 176°F (80°C).
- Airbag modules and SDMs should not be stored in damp conditions.
- Do not store airbag module or SDM boxes more than two high.
- Always store and handle airbag modules and SDMs in an upright position. Never store SDMs upside down.

Sensor & Diagnostic Module (SDM)

The SDM is calibrated specifically to the Elise, and is mounted on a dedicated bracket to the scuttle beam. Never use an SDM from another vehicle, or modify its mounting to the Elise.

WARNING:

- **Handle the SDM with great care. Never strike or jar the SDM as this could cause airbag deployment and result in personal injury or improper operation of the SRS.**
- **All module and mounting bracket bolts must be correctly installed and tightened to assure proper security and operation.**
- **Never power up the SRS when the SDM is not properly mounted and secured, since the SDM is easily triggered when not attached, and could result in deployment causing personal injury.**
- **Do not use or attempt to repair a damaged SDM.**

Inflator Module

Live (Undeployed) Inflator Modules: Special care is necessary when handling and storing a live (undeployed) inflator module. In the unlikely event of accidental deployment, the rapid gas generation produced during deployment of the air bag could cause violent movement of the inflator module or surrounding objects, and result in personal injury.

WARNING:

- **When carrying a live inflator module, make sure the bag and trim cover are pointed away from you. In case of an accidental deployment, the bag will then deploy with minimal chance of injury.**
- **When placing a live inflator module on a bench or other surface, always face the bag and trim cover upwards, away from the surface. This is necessary so that a free space is provided to allow the air bag to expand in the unlikely event of accidental deployment. Otherwise, personal injury may result.**
- **Never carry the inflator module by the wires or connector on the underside of the module.**
- **Do not use or attempt to repair a damaged inflator module, and NEVER apply any electrical power to the module except as specified in the diagnostic procedures.**

Inflator Module Shipping Procedures for Live (Undeployed) Inflator Modules

The transportation of uninstalled inflator modules is regulated by the Hazardous Materials Regulations of

Downloaded from www.Manualslib.com manuals search engine

Airbag Activation/Disposal Procedure

Items Required

2	People.
2 Pairs	Heat proof gloves.
2 Pairs	Eye protection glasses.
2 Pairs	Ear defenders.

Explosion container – a container to constrain the sudden inflation of the bag, may be mesh e.g. metal stillage, but requires a lid.
Sandbags, - to keep lid closed.
12 volt power supply.
Various air bag & seat belt wiring connectors / small crocodile clips.
10 meters Detonation wire
Paint marker pen
Dustbin / recycling container.

Weather Conditions.
Calm, clear, dry day with very little wind.
Place power supply upwind of explosion.

Location.
Any isolated area.

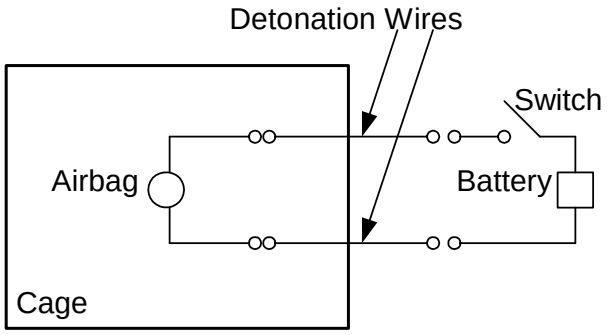

Procedure.

- Circuit diagram as shown.
- Make sure the power supply is turned off and is situated the length of the detonation wires away from the airbag.
- Only detonate ONE at a time.
- Ensure the detonation wires are disconnected from the power supply.
- Place 1 airbag into the explosion container and connect the detonation wires. Do not snag wires.
- Secure lid with sandbags.
- Put on your Eye & Ear protection.
- Connect the detonation wires to the power supply, doesn't matter on polarity.
- Turn the power supply on.
- ***AIRBAG WILL DETONATE AND INFLATE.***
- Turn power supply off and disconnect detonation wires from the power supply.
- Put on your heatproof gloves.
- Remove the airbag from the explosion container and disconnect the detonation wires.
- Mark-up and place the detonated airbag into the recycling container.
- Repeat this procedure as many times as required.

Downloaded from www.Manualslib.com manuals search engine

the U.S. Dept, of Transportation (DOT) and most state governments. Special procedures are required for transportation. Lotus recommends that the dealers and repair shops check with the hazardous material section of their respective state police authority for applicable shipping requirements.

For all shipments on public roads, the DOT has classified the uninstalled inflator module as a flammable solid under a special exemption process. It should always be shipped and stored in the approved cardboard container in which it is purchased. The container should be marked with “Flammable Solid , n.o.s., UN1325, DOT-E8236” and labelled with the specified red and white flammable solid label. Each shipping location must have a copy of the exemption on file. A shipping paper (e.g., a customer receipt) must accompany each shipment and identify the module as “Flammable Solid, n.o.s., UN1325, DOT-E8236”. Transportation, storage and handling of the module should be in accordance with the exemption and the requirements for a DOT flammable solid. Do not expose the module to heat, open flame, impact, friction, or electrical charge.

Inflator Module Scrapping Procedures

WARNING: Failure to follow proper SRS inflator module disposal procedures can result in airbag deployment which may cause personal injury. Undeployed inflator modules must not be disposed of through normal refuse channels. The undeployed inflator module contains substances that can cause severe illness or personal injury if the sealed container is damaged during disposal. Disposal in any manner inconsistent with proper procedures may be a violation of federal, state and/or local laws.

Reference should be made to the local State authority for the correct disposal procedures for deployed inflator modules.

Vehicle Scrapping Procedures

Some vehicles equipped with SRS that have live (undeployed) inflator modules may have to be scrapped because they have completed their useful life, or have been severely damaged in a non-deployment type accident. The following procedure should be followed when scrapping a vehicle with an undeployed module.

1. Follow the safety procedure detailed in sub-section WD.6 to turn off the ignition, disconnect the battery and unplug the yellow 4-way connector to the inflator module, alongside the steering column.
2. Follow the procedure detailed in sub-section WD.11 to gain access to the passenger airbag module.
3. At the driver's airbag harness alongside the steering column, cut the harness side of the SRS wiring approx. 3 to 6 inches from the yellow connector.
4. Splice 2 wires at least 20 feet long to the red/blue and the red/green coloured cables in this connector block.
5. Reconnect the yellow 4-way connector block now equipped with 2 x 20ft long cables.
6. Check that the inflator module is secured to the steering wheel.
7. Remove all loose objects from the front seat.
8. Ensure no one is in the vehicle.
9. Stretch wires away from car to their full length.
10. Apply 12 volts across the wires to deploy the air bag.
11. Do not touch the inflator module area for 20 minutes due to the heat generated during deployment.
12. Wear gloves and safety glasses to handle the deployed air bag. Wash your hands with mild soap and water afterwards.
13. Repeat steps 3 to 12 for the passenger airbag, splicing the 20ft cables into the two wires connecting the SDM to the airbag.

Deployed Inflator Modules

WARNING: Safety precautions must be observed when handling a deployed inflator module. After deployment, the air bag surface may contain a white packing powder used to ease deployment, together with a small amount of sodium hydroxide dust, a by-product of the sodium azide reaction during deployment that can be irritating to the skin if left on for an extended period of time. Always wear gloves and safety glasses when handling a deployed inflator module, and wash your hands with a mild soap and water afterwards.

Downloaded from www.Manualslib.com manuals search engine

Inspections Required After an Accident

All SRS system components, including harnesses and brackets, must be inspected after an accident. If any are damaged or bent, they must be replaced even if a deployment did not occur. If the SRS was deployed, the following components MUST be renewed even if there is no visible damage to the parts:
Driver airbag module;
Passenger airbag module;
Sensor & Diagnostic Module (SDM);
Driver and passenger pyrotechnic seat belt assemblies;
Rotary connector;
Passenger airbag mounting brackets (2);
Passenger airbag shute (2);
Passenger airbag door assembly (trim panel);
Dash panel upper extrusion.

Inspect the steering column for damage or telescoping (see Section HG) and column mounting brackets for damage. Inspect the chassis scuttle beam in the area of the passenger airbag mounting brackets for damage or distortion. Inspect the SRS wiring harness and connectors for damage or any signs of overheating. Do not attempt to repair the steering column or chassis or any of the above mentioned components. Service is by replacement only.

WARNING: Proper operation of the SRS system requires that any repairs to the vehicle structure return it to its original production configuration. Deployment, or any visible damage to the SRS components and/or their respective mounting brackets requires replacement, not repair.

WD.7 - THEORY OF OPERATION

The key components of the Supplementary Restraint System (SRS) are the following:

- Sensor & Diagnostic Module (SDM);
- Driver airbag module;
- Passenger airbag module;
- Rotary connector;
- Seat belt pre-tensioners.

Sensor & Diagnostic Module (SDM)

The SDM is the main electronic control unit (ECU) of the SRS, whose function is to detect rates of forward deceleration, and when interpreted as a collision accident requiring supplementary occupant protection, the SDM triggers as a single set, the driver and passenger airbags and both seat belt pre-tensioners. Additional functions are to maintain an energy reserve in case of vehicle battery power interruption, operation of a dash mounted tell tale lamp, and a electronic diagnostic and event recording facility accessible via a workshop scanner tool.

The unit is mounted by a dedicated bracket to the top of the passenger side scuttle beam, accessible after removal of the fascia top.

The following functionality is provided by the SDM;

- Sensing of frontal impact crash events and vehicle specific discrimination between non-deployment and deployment-requiring events as well as the deployment of the frontal airbags and seat belt pre-tensioners.
- In case of a required deployment, timely activation of the activation current for the deployment loops.
- Detection of electrical system faults which may influence the readiness of the system to deploy, or increase the probability of an inadvertent deployment by:
  - continuous electrical monitoring of all deployment circuits (without any effect on the readiness of the system);
  - continuous monitoring of the supply voltage and the lamp circuitry (dependent on lamp driver activation status);
  - SDM self test;
  - activation of a tell tale lamp in case of a detected system fault.

Downloaded from www.Manualslib.com manuals search engine

- Fault storage and 'Crashrecording' within EEPROM ('crashrecording': recording of system parameters (e.g. fault status in deployment events).
- Diagnostic communication using an ISO9141 protocol.

Frontal Impact Sensing and Deployment

The SDM contains an integrated accelerometer which provides a nearly linear proportional electrical representation of the acceleration experienced by the vehicle along the longitudinal axis. This signal is amplified and filtered to reduce unwanted electronic noise and to compensate for offset drifts. The filtered signal is then digitized to provide an input for evaluation by the crash algorithm. As soon as the crash algorithm detects that pre-defined thresholds have been exceeded, the SDM activates both airbags and both seat belt pre-tensioners.

To enhance system reliability under normal driving conditions, an additional electromechanical 'safing' sensor is included to ensure that the SRS is armed only when significant deceleration occurs. In order to protect against undesired deployments in case of severe EMI, humidity or accelerometer fault, the deceleration condition monitoring by the safing sensor occurs in addition to, and independent of, the crash algorithm.

Neither the seat belt pre-tensioners nor the airbags will be activated by the SDM as long as the diagnostic mode is active.

Fault Display

The following conditions lead to a fault display in the form of continuous illumination of the airbag tell tale.

- One or more trouble codes requiring tell tale lamp activation in the 'historic' and 'present' condition are stored in the SDM's EEPROM.
- One or more trouble codes requiring tell tale lamp activation in the 'present' condition only are stored in the SDM's EEPROM, the condition of which is, or has been, 'present' in the current operating cycle. For all faults requiring four consecutive incidents for a trouble code to be set, the 'present' condition and fault display will be activated already after two consecutive events if the related trouble code has already been stored in a previous operating cycle.
- Faults concerning the voltage supply (overvoltage/undervoltage) will lead to tell tale activation only until the regular voltage range has been reached again (turn-off delay max. 5s after return from undervoltage and max. 20s after return from overvoltage). There are no related trouble codes.
- The airbag tell tale will not be activated due to SRS warning lamp related faults.
- The tell tale will be activated immediately after entering the diagnostic mode, or on deployment of the SRS.

Excluding the exceptions stated above, it is not possible to switch off the tell tale other than by resetting the fault codes stored in the EEPROM. This is not possible after an airbag deployment - the SDM must be renewed.

The following delays apply for the detection and display of faults. The delays apply from the extinguishing of the tell tale, following the ignition switch on bulb check period:

1 to 5 secs - for external deployment circuit faults and overvoltage supply.
12 to 20 secs - for undervoltage supply.
up to 15 secs - for SDM internal faults.

The tell tale will be activated without SDM intervention in the following situations:

- the minimum voltage of 8.0 V has not been exceeded after switching on the ignition.
- the energy reserve (in SDM) has run low, which may be caused by supply voltages below 7.8 V.
- the watchdog has interfered.

A trouble code readout using tell tale blink codes is not implemented.

Power Supply & Grounding

The nominal supply voltage of +12 volts is derived from terminal 5 when the ignition is switched on. The SDM internal ground (terminal 7) must be securely connected to the vehicle chassis ground. To provide redundant grounding, the SDM housing is internally connected to the ground connector pin.

Supply Voltage Range

The SDM is designed to operate within the following voltage ranges:

Downloaded from www.Manualslib.com manuals search engine

System fault detection, SDM self test: min. 8.0 V; max. 16.0 V
Below 10.0 V system readiness may be delayed by 3 s.
Below 9.0 V system readiness may be delayed by 10 s.
System fault detection and SDM self test are reduced as long as an undervoltage condition is detected, which could already apply for supply voltages below 10.5 V.
Activation of airbags: min. 8.0 V; max. 16.0 V.
Activation of seat belt pre-tensioners: min. 10.0 V; max. 16.0 V.

Energy Reserve

Energy reserve capacitors within the SDM are provided to allow SRS deployment if the vehicle battery power supply is interrupted during the time of vehicle impact. The capacitors provide full support of the acceleration sensing and airbag initiation capability for a minimum of 150 ms after a loss of external power supply, provided that before the loss, the SDM had been supplied with:
at least 10.0 V for at least 10 s; or
at least 9.0 V for at least 13 s; or
at least 8.0 V for at least 20 s.

The capacitors will be discharged down to a point where no initiation of airbags is possible within a max. of 20 s after removal of the power supply.

WD.8 - SENSOR & DIAGNOSTIC MODULE (SDM)

To Replace SDM

WARNING: The SDM must be replaced after SRS deployment. Do not attempt to repair or reuse.

The SDM is mounted on a bracket riveted to the top of the passenger side scuttle beam, and is accessible only after removal of the fascia (dash) top panel.

1. Follow the safety procedure detailed in sub-section WD.6 to turn off the ignition, disconnect the battery and unplug the yellow 4-way connector to the inflator module, alongside the steering column.

2. Column shrouds: Remove the two screws retaining the top part of the shroud, and the four screws retaining the lower part, and withdraw both parts from the column.

3. Instrument shroud: Pull the instrument shroud backwards to release the four spring clips from their apertures in the dash panel.

4. Sill top trims: Release the two screws at the bottom of the coin pockets at the front of each sill, and pull the sill top trim panels from the chassis.

5. Dash end panels: Release the two screws within the top of each coin pocket, and withdraw the switch panel (driver's side) and blanking panel (passenger side) from the dash end panel. Unplug the wiring harness from the switch panel.
   From within the aperture, release the two screws retaining each end panel to the dash, and pull the panel rearwards to withdraw the spring clips in the top of the panel from the dash.

6. Airbag door: Pull the airbag door away from the dash, which action will probably require the four retaining clips to be renewed. Note that the door is constrained by two tether straps.

WARNING:
- **The only permitted repair to the airbag door and tether strap assembly is the replacement of the plastic retaining clips which secure the door to the dashboard. If the clips are broken, they MUST be replaced ONLY by the correct Lotus supplied parts. Do not attempt to fix the door in position by any other means.**
- **After SRS deployment, the airbag door assembly MUST be replaced even if there is no visible damage.**

Downloaded from www.Manualslib.com manuals search engine

7. Centre vent panel and radio surround: Release the two screws at each side of the panel and withdraw.

8. Fascia top panel: Remove the 5 screws securing the rear edge of the panel to the dash rail, and withdraw the panel rearwards to disengage the two spigots from the base of the windscreen surround. Disconnect the speaker cables.

9. SDM: Unplug the harness connector from the SDM. Release the four retaining nuts, and withdraw the sensor and diagnostic module from its mounting bracket.

Refitment of the SDM is a reversal of the removal procedure, but remember to check that the tether strap bracket for the airbag trimmed door has been secured before the fascia top panel is fitted, and that new push fasteners for the airbag door will be required.

WD.9 - DRIVER AIRBAG MODULE

WARNING: Safety precautions must be observed when handling a deployed airbag. After deployment, the airbag surface may contain a white packing powder used to ease deployment, together with a small amount of sodium hydroxide dust, a by-product of the sodium azide reaction during deployment that can be irritating to the skin if left on for an extended period of time. Always wear gloves and safety glasses when handling a deployed inflator module, and wash your hands with a mild soap and water afterwards.

The driver's airbag (or inflator module) is housed in the hub of the steering wheel, beneath a moulded trim cover designed to hinge open in the event of deployment. The module comprises:

- an inflatable fabric bag;
- an inflator (canister of gas generating material)
- an initiator (or 'squib')

When the vehicle suffers a forward deceleration of sufficient magnitude to close both the safing sensor and integrated accelerometer within the SDM, current flows through the deployment loop of both the driver and passenger airbag module initiators and ignites the gas generating material. Each bag inflates in a fraction of a second, the driver's bag bursting open the steering wheel centre trim cover, and then deflates via vents in the bag, with the whole cycle taking less than one second. The airbag is designed for a single deployment, and must then be renewed.

In order to help prevent unwanted deployment of the driver's airbag when servicing the steering column or other SRS components, a shorting bar is incorporated in the airbag side of the 4-way harness connector plug located alongside the steering column. The shorting bar operates when the connector is unplugged, to short across the feed and return connections to the airbag. Thus, if a positive feed, or earth is inadvertently applied to the connector terminals, both sides of the inflator module will be subject to the same electrical potential, and no deployment will occur.

To replace driver's airbag

WARNING: The following procedures must be followed in the order listed to temporarily disable the airbag system whilst working in the immediate vicinity of an airbag. Failure to follow this procedure could cause unintended airbag deployment, resulting in personal injury and unnecessary airbag system repairs.

a). Turn off ignition.
b). Disconnect the negative battery cable, and tape back to ensure that it cannot contact the battery terminal.
c). From alongside the steering column, in the area of the column upper fixing, locate and disconnect the driver's airbag yellow 4-way harness connector plug.

1. Column shrouds: Remove the two screws retaining the top part of the shroud, and the four screws retaining the lower part, and withdraw both parts from the column.

2. On the reverse side of the steering wheel, locate and remove the two socket head screws, accessible via holes in the plastic shroud around the steering wheel hub. Withdraw the airbag module and disconnect

Downloaded from www.Manualslib.com manuals search engine

the yellow harness connector.

WARNING: When carrying a live airbag module, make sure the bag and trim cover are pointed away from you. In case of an accidental deployment, the bag will then deploy with minimal chance of injury. When placing a live airbag module on a bench or other surface, always face the bag and trim cover upwards, away from the surface. This is necessary so that a free space is provided to allow the airbag to expand in the unlikely event of accidental deployment.

3. If a driver's airbag is deployed, refer to steering section HG to determine whether the steering column telescoping mechanism has been activated, and if necessary, renew the column assembly.

4. Mate the new airbag yellow connector plug with the harness plug in the steering wheel hub, and locate the module into the steering wheel. Fit the two socket head retaining screws and tighten to 7Nm.

5. When all service work is complete, connect the harness plug alongside the steering column, and reconnect the battery. Turn on the ignition and check that the airbag tell tale lights for a few seconds and then goes out.

WD.10 - ROTARY CONNECTOR

WARNING: The rotary connector MUST be replaced after SRS deployment even if there is no visible damage.

The rotary connector is a device which fits between the steering wheel and column, and allows the steering wheel to turn whilst maintaining electrical continuity to the airbag module and horn buttons. The assembly consists of an annular housing fitted over the top end of the steering column, and containing a coil of four wires. The wires are:

- +ve feed to the inflator module (switched by the safing sensor);
- ground to the inflator module (switched by the microprocessor accelerometer);
- input to the horn buttons;
- output from the horn buttons.

The steering column side of the device is fitted with a 4 way connector block which plugs into the SRS harness. The steering wheel side of the device has two 2-way connector plugs, one for the airbag module, and one for the horn buttons. The coil housing is constructed in two parts, with the outer part fixed to the outer (stationary column, and the inner part keyed to the inner (rotating) column.

The two parts of the coil housing slide inside of each other in such a way as to allow the steering wheel to be rotated through its full travel, lock to lock, whilst maintaining an unbroken feed to each of the four circuits in the steering wheel hub, via the continuous wires in the coils.

In order to help prevent unwanted deployment of the air bag when servicing the steering column or other SIR components, a shorting bar is incorporated in the rotary connector side of the 4-way SRS harness connector plug. This shorting bar operates when the connector is unplugged, to short across the feed and return connections to the inflator module. Thus, if a positive feed, or earth is inadvertently applied to the connector terminals, both sides of the inflator module will be subject to the same potential, and no deployment will occur.

When servicing the rotary connector, it is most important that the correct orientation of the connector is maintained on refitment, or the connector will run out of travel and be broken.

To replace the rotary connector

1. Remove the airbag module from the steering wheel (see sub-section WD.8).

2. Disconnect the horn harness plug.

3. Bend back the locking tabs and release the nut securing the wheel to the column. Before attempting to remove the wheel, ensure the front wheels are pointing straight ahead, and match mark the position of the steering wheel hub against the column to aid re-assembly.

4. Using a suitable steering wheel puller tool, position the legs to reach through the holes in the wheel hub

Downloaded from www.Manualslib.com manuals search engine

and bear directly against the hub, without interfering with the rotary connector. The centre screw should bear against the end of the column. Withdraw the wheel/hub/rotary connector assembly from the column splines.
Alternatively, for better puller access, the steering wheel can first be removed from the hub by releasing the four retaining screws.
CAUTION: If excessive force is applied to either the wheel or column without an appropriate puller, the telescoping mechanism of the outer column may be overridden, necessitating column replacement.

5. Release the two countersunk screws retaining the rotary connector to the steering wheel hub.

6. On refitment, feed the airbag and horn connector plugs on the rotary connector through the hole in the steering wheel hub, and secure the unit to the hub with the two countersunk screws. If necessary, refit the steering wheel to the hub and secure with the four screws. Mate the horn buttons harness connector plug.

7. Before fitting the wheel/hub/rotary connector assembly to the column, the rotary connector must be centralised: Turn the connector centre element fully counterclockwise until tight, then turn clockwise approximately 2.5 turns until the arrow marks on the two parts of the rotary connector are aligned. Make sure the front wheels are pointing straight ahead, and fit the assembly onto the column with the hub to column match marks (made on disassembly) aligned, and engage the spring loaded pin on the column switch housing with the slot in the rotary connector.

8. Fit a new locking tab washer, followed by the steering wheel nut, and torque tighten to 25 Nm (18.5 lbf.ft). Bend up the locking tabs to secure.

9. Mate the airbag harness connector plug and fit the airbag module into the steering wheel. Retain with the two socket head screws and tighten to 7Nm.

10. Refit the column shrouds, and when all service work is complete, mate the horn/airbag connector to the vehicle harness (clipping the connector to the column) and reconnect the battery. Check that the airbag tell tale lights for a few seconds with ignition, and then goes out.

WD.11 - PASSENGER AIRBAG MODULE

WARNING: Safety precautions must be observed when handling a deployed airbag. After deployment, the airbag surface may contain a white packing powder used to ease deployment, together with a small amount of sodium hydroxide dust, a by-product of the sodium azide reaction during deployment that can be irritating to the skin if left on for an extended period of time. Always wear gloves and safety glasses when handling a deployed inflator module, and wash your hands with a mild soap and water afterwards.

The passenger's airbag (or inflator module) is housed within the passenger side of the fascia, mounted on a bracket to the scuttle beam, and arranged to deploy via an aperture in the dash panel covered by a trimmed 'door'. The door is designed to break away in the event of airbag deployment, but is tethered to the dash by two restraining straps. The airbag module comprises:

- an inflatable fabric bag;
- an inflator (canister of gas generating material)
- an initiator (or 'squib')

When the vehicle suffers a forward deceleration of sufficient magnitude to close both the safing sensor and integrated accelerometer within the SDM, current flows through the deployment loop of both the driver and passenger airbag module initiators and ignites the gas generating material. Each bag inflates in a fraction of a second, the passenger's bag bursting through the dash panel 'door', and then deflates via vents in the bag, with the whole cycle taking less than one second. The airbag is designed for a single deployment, and must then be renewed.

Downloaded from www.Manualslib.com manuals search engine

WARNING: The harness connector for the passenger's airbag is accessible only after removing the fascia top panel, so care should be taken to avoid working in close proximity to the airbag door in case of unintended deployment.

To replace passenger's airbag

WARNING: The following procedures must be followed in the order listed to temporarily disable the airbag system whilst working in the immediate vicinity of an airbag. Failure to follow this procedure could cause unintended airbag deployment, resulting in personal injury and unnecessary airbag system repairs.

a). Turn off ignition.
b). Disconnect the negative battery cable, and tape back to ensure that it cannot contact the battery terminal.
c). From alongside the steering column, in the area of the column upper fixing, locate and disconnect the yellow driver's airbag harness connector plug.

1. For access to the passenger's airbag module, the fascia top panel must first be removed. Refer to sub-section WD.8.

2. From the right hand end of the airbag module, pull out the security tag and unplug the harness connector.

3. Release the two nuts and remove the airbag door tether strap bracket from the module mounting bracket.

4. Release the four nuts and the dash steady brackets securing the airbag module, and withdraw the module from its mounting bracket.

WARNING: When carrying a live airbag module, make sure the bag and trim cover are pointed away from you. In case of an accidental deployment, the bag will then deploy with minimal chance of injury. When placing a live airbag module on a bench or other surface, always face the bag and trim cover upwards, away from the surface. This is necessary so that a free space is provided to allow the airbag to expand in the unlikely event of accidental deployment.

5. If an airbag deployment has occurred, the chassis scuttle beam, airbag mounting bracket, dash extrusions and all associated parts must be carefully examined for distortion and renewed where necessary.

WARNING: Proper operation of the SRS system requires that the vehicle structure remains in its original production configuration. Any damage to the SRS components and/or their respective mounting brackets, including the chassis, requires replacement, not repair.

6. If necessary, fit the airbag mounting brackets to the scuttle beam, and tighten the four M8 fixing bolts to 15 Nm.

7. Fit the airbag module to the mounting brackets, together with the dash steady brackets. Tighten the four M6 nuts to 6 Nm.

8. Fit the airbox door tether strap bracket to the airbag module mounting bracket, and tighten the two nuts to 10 Nm.

9. Plug in the harness connector into the RH side of the module and retain with the security tag.

10. Refit the fascia top panel (see sub-section WD.8).

11. Refit the column shrouds, and when all service work is complete, mate the horn/airbag connector to the vehicle harness (clipping the connector to the column) and reconnect the battery. Check that the airbag tell tale lights for a few seconds with ignition, and then goes out.

Downloaded from www.Manualslib.com manuals search engine

WD.12 - SEAT BELT PRE-TENSIONERS

WARNING:

- **Failure to comply with the instructions, safety standards and operating procedures as described in this section, may cause vehicle damage and/or personal injury.**
- **Both driver and passenger seat belt assemblies must be replaced after SRS deployment. Do not attempt to repair or reuse.**

Device Operation

The seat belt pre-tensioners are triggered together with the airbags, and use a pyrotechnic device on each seat belt reel assembly, to operate a rack and pinion mechanism which applies a tightening force to the belt reel to remove any slack from the belt. Under normal operation, the rack is fully raised and disengaged from the pinion, allowing normal spooling of the reel for belt withdrawal and retraction.

When airbag/pre-tensioner triggering conditions apply, the SDM signals ignition of the gas generator, the pressure from which forces the piston and toothed rack downwards, causing rotation of the pinion gear and a re-winding of the seat belt webbing. The force sustained by the belt and its user is then controlled by a torsion bar within the belt reel to limit the deceleration force to which the occupant is subjected during the crash event.

The belt pre-tensioning mechanism is designed to operate only once, such that both belt assemblies should be renewed after airbag/seat belt pre-tensioner deployment. Activation of the pyrotechnic mechanism is indicated by the belt reel being locked, and allowing neither extraction nor retraction of the belt.

WARNING: Following an impact in which the pre-tensioning element is activated, the seat belt assembly is rendered inoperable. The car should not be driven until the belt assembly has been renewed.

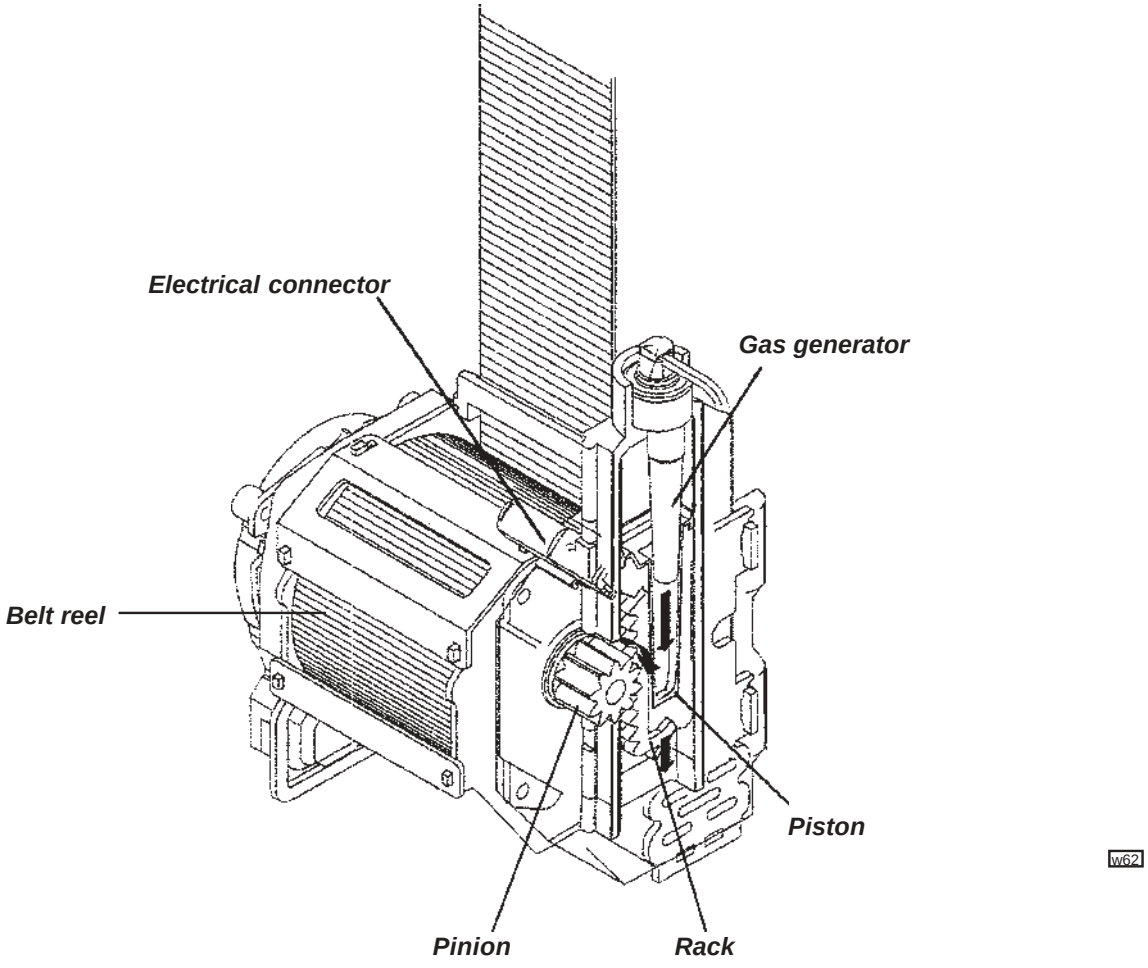

Downloaded from www.Manualslib.com manuals search engine

Removal of Seat Belt Assembly

WARNING: Before removing or refitting a pyrotechnic seat belt assembly, the ignition key should be withdrawn, and the battery leads disconnected from both positive and negative terminals, and isolated to ensure that accidental contact cannot occur.

Each seat belt reel assembly is secured, via a spacer block, to the seat belt mounting bracket/roof hoop by a single bolt. Note that an orientation tang is incorporated on the belt reel which engages with a hole in the spacer, and that the spacer is keyed to the mounting bracket by a roll pin.

1. Check that the key is removed from the ignition switch.

2. Disconnect both battery cables, and insulate to ensure that accidental contact cannot occur.

3. Remove both seats by releasing the seat belt from the seat (noting the 10mm spacer), and the seat runners or frame from the floor.

4. Remove the centre tunnel rear cup holder liner after removing the single screw from inside the base. Remove the two screws then exposed securing the cup holder, and remove the holder, disconnecting the auxiliary power socket.

5. Remove the 4 fixings along the top of the cabin rear bulkhead trim panel, and withdraw the panel, disconnecting the speakers and interior lamp.
6. Hinge up the plastic cover and release the belt slide from the roof hoop, noting the 5mm spacer.

7. Allow at least one minute from disconnecting the battery before disconnecting the electrical connector from the gas generator on the seat belt assembly. Release the Torx head fixing bolt and withdraw the belt reel assembly and spacer block.

Fitment of Seat Belt Assembly

WARNING: Before removing or refitting a pyrotechnic seat belt assembly, the ignition key should be withdrawn, and the battery leads disconnected from both positive and negative terminals, and isolated to ensure that accidental contact cannot occur.

Each seat belt reel assembly is secured, via a spacer block, to the seat belt mounting bracket/roof hoop by a single bolt. Note that an orientation tang is incorporated on the belt reel which engages with a hole in the spacer, and that the spacer is keyed to the mounting bracket by a roll pin.

1. Fit the seat belt reel assembly and alloy spacer to the bracket on the mounting frame, with the spacer block located by its roll pin into the hole in the bracket, and the belt reel tang located in the upper hole in the spacer. Fit and tighten the single Torx head fixing bolt (discarding the cardboard retaining washer if fitted) to 45 Nm (33 lbf.ft). Plug the harness connector plug into the gas generator on the belt assembly.

2. Fit the belt slide to the roof hoop with the 5mm spacer interposed, and tighten the special shouldered bolt to 45 Nm (33 lbf.ft). Check that the hoop is free to pivot. Clip the plastic cover into position.

3. Refit the cabin rear bulkhead trim panel, connecting the interior lamp and speakers, and retain with the four screws.

4. Refit the cup holder, connecting the power socket, and liner.

5. Refit the seats and fit the seat belt to the seat frame with the 10mm spacer between belt and seat. Tighten the special shouldered bolt to 33 Nm (24 lbf.ft). Check that the belt eye is free to pivot.

6. Reconnect the battery, turn on the ignition, and check that the airbag tell tale lamp lights for a few seconds and then goes out.

Downloaded from www.Manualslib.com manuals search engine

Safety Standard

The pre-tensioning function is energised via pyrotechnic materials, therefore manipulation, handling and storage MUST be performed to the specified procedures as described to avoid any occurrence of injury to the operator or damage to the pre-tensioning unit.

In normal conditions, the pre-tensioner assembly can only be activated through the action of the electric ignition control during impact. During the activation phase of the pyrotechnic charge, small gas quantities are developed. The main constituent of the gases is Nitrogen:

Note! This gas is not toxic.

The pre-tensioner assemblies must be protected against exposure;

- To temperatures over 90°C (195°F) at contact with surfaces
- 90°C during 106 hrs.
- From sparks and naked flames.

WARNING: If exposed to temperatures in excess of 140°C, self-ignition of the pyrotechnic charge of the gas generator may occur. Exposure to temperatures in excess of 165°C, self-ignition of the pyrotechnic charge will occur.

Also, if exposed to temperatures between 90°C (285°F) and 165°C (330°F), deterioration of the pyrotechnic charge ignition is possible. The consequences of this could be failure to activate at prescribed levels. The pre-tensioner must be protected against stresses, shocks and dropping. Pre-tensioners that have been subjected to such treatment must be discarded and returned to the supplier with accompanying paperwork describing the reasons for return.

Never store pre-tensioner assemblies with other flammable or combustible materials. Gas generators MUST be prevented from coming into contact with acid, water, grease and heavy metals: **Contact with these substances may cause toxic or dangerous gases, or explosive mixtures.**

Any residual fuel of the gas generator, not burned during ignition, is slightly flammable. The unit, therefore, must **never** be disassembled, damaged or the parts manipulated. Any advertising or demonstrations of the pre-tensioner assembly should only be carried out using inert pre-tensioners (without the pyrotechnic charge). The base of the pre-tensioner must be painted green, with visible and indelible wording, stating **'Inert Assembly'**. It must incorporate the KSS logo, signed with indelible ink by the person responsible for the supply of the product.

WARNING: Never disassemble the pre-tensioner or any of it's components!

Transportation of belt with pre-tensioner

Transport on road vehicles should be carried out with the assemblies stored in the luggage compartment. Never transport in the passenger compartment. Never transport the pre-tensioner manually or holding it by the webbing: this can result in damage to the assembly.

Storage of belt with pre-tensioner

Belts with pre-tensioning elements should be stored in containers or boxes that can be locked with a key, and ventilated. They MUST be stored in an area free from flames and heat sources. On completion of work, or during work break periods, pre-tensioner belts should be returned to the storage container and locked with a key.

Disposal of belts with pre-tensioner

Charged pre-tensioners to be scrapped and not fitted to a car must be activated. This should be carried out only by the belt manufacturers, or specialised workshops.

Vehicle disposal

Charged pre-tensioners fitted to a vehicle MUST be removed before the vehicle is dismantled for scrapping. If the pre-tensioner is not activated during an accident, the device must be considered as still to be in a 'charged' condition.

General safety instructions/dangers for health

- When handling activated pre-tensioners, use safety glasses and vinylic or nitrylic protection gloves.
- After handling a loaded pre-tensioner, wash hands with soap and water.

Downloaded from www.Manualslib.com manuals search engine

- There is no danger of exposure to propellants in the sealed system. The propellant mix is in a solid state, therefore no inhalation is possible, even if the gas generator cartridge is broken.
- Avoid skin contact and do not ingest the propellant.

First aid
Ingestion: Help the person vomit if conscious. Call a physician.
Skin contact: Wash immediately with soap and water. Call a physician.
Eyes: *Wash the eyes immediately with running water for a minimum of 10 minutes. Call a physician.*
Inhalation: Take the person immediately to fresh air. Call a physician.

General notice
Storage, transport, dismantling and/or recycling of the pre-tensioner shall be carried out according to the legal and local regulations, taking account also of directives for masonry, fire fighting, transport, environmental protection and the safety and health of all staff.

WARNING: The seat belt pre-tensioner devices fitted on the Lotus Elise are designed and calibrated specifically for this particular model. Pre-tensioners must not be adapted, re-used or installed on any other vehicle - they must only be fitted to the prescribed vehicle with specific homologation continuity.

Any attempt to re-use, adapt or install pre-tensioners on a different vehicle can cause severe or fatal injuries to the occupants during normal operation as well as the result of an accident.

Downloaded from www.Manualslib.com manuals search engine

SUPPLEMENT

EXIGE SUPERCHARGED (S/C)

	Sub-Section	Page
Concept & Overview	Exige S/C.#	2
Technical Data	Exige S/C.TD	3
Body	Exige S/C.B	4
Front Suspension	Exige S/C.C	5
Rear Suspension	Exige S/C.D	5
Engine	Exige S/C.E	5
Wheels & Tyres	Exige S/C.G	11
Brakes	Exige S/C.J	11
Cooling	Exige S/C.K	11
Maintenance & Lubrication	Exige S/C.O	12
Clutch	Exige S/C.Q	12
Miscellaneous	Exige S/C.Z	12

sn_Exige Supercharged supplement.indd 1 03/03/2006 11:32:33
Downloaded from www.Manualslib.com manuals search engine

EXIGE S/C.# - CONCEPT & OVERVIEW

In February 2005, Lotus announced the Lotus Sport Exige 240R (243 bhp) to provide discerning customers with an exclusive very high performance derivative of the Exige, to be built in a global limited edition of 50 units. The cars to be produced to customer order as post registration official factory conversions of the '05 Exige by the Lotus Sport workshops at Hethel, and available for the U.K. and certain overseas territories where regulations allow. In November 2005, Lotus Sport commenced build of a limited number of Exige Cup 240 cars in road or race specification for selected markets, and differing in detail to the 240R. Then in January 2006, an official production version of the supercharged car, Exige S, was introduced with a simplified specification.

The performance of the standard Exige is uprated by the fitment of a Magnuson supercharger belt driven from the crankshaft, feeding through an air/air chargecooler into a new plenum/intake manifold, and featuring a supercharger integral by-pass valve. The 240R engine uses a mechanical throttle and a 5th injector mounted in the intake manifold plenum, whereas the '06 M.Y. Cup cars use an electronic throttle, larger port injectors and no 5th injector, and the Exige S utilises standard injectors.

Chassis dynamics on 240R and Cup cars are uprated by the fitment of Ohlins 2-way adjustable dampers, with adjustable spring platforms for the uprated springs, and new lightweight forged 5-spoke roadwheels of slightly wider section to accommodate optional track use only slick tyres.

This supplement describes the features of the supercharged variants which differ from the standard '05 Exige model. For information on any subject matter not included here, refer to the main manual.

Lotus Sport Exige 240R

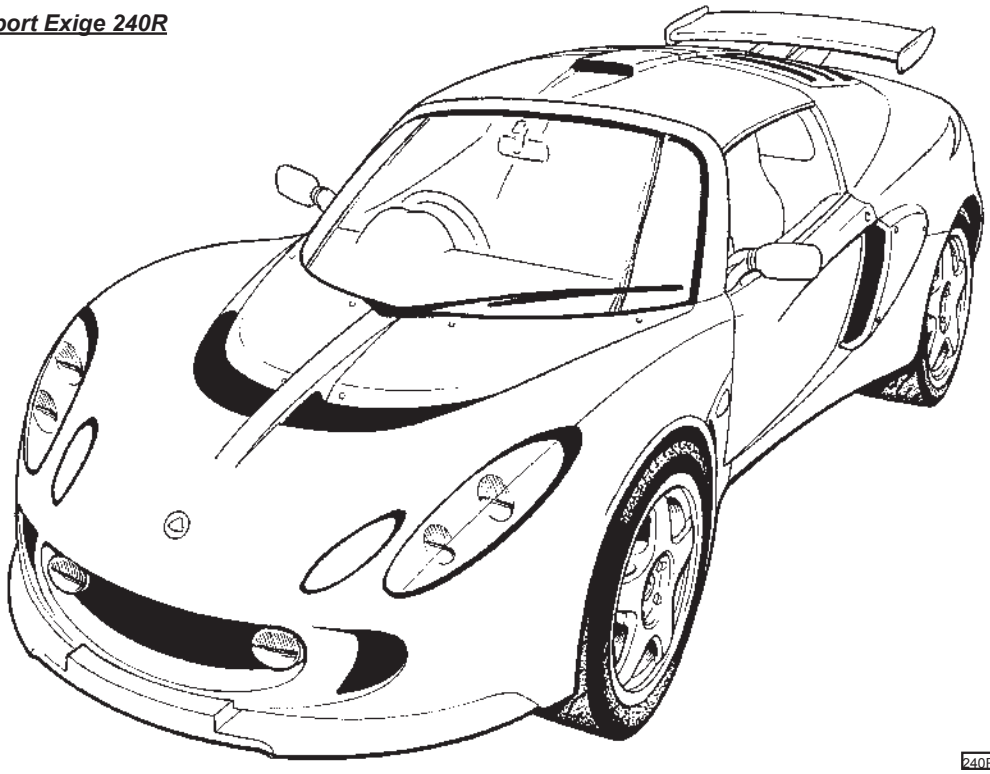

240Rint

sn_Exige Supercharged supplement.indd 2 03/03/2006 11:32:34
Downloaded from www.Manualslib.com manuals search engine

EXIGE S/C.TD - TECHNICAL DATA

Where different to standard Exige:

Engine

Forced induction		Magnuson MP62 supercharger with integral by-pass valve. Air/air chargecooler.
Maximum boost pressure		0.5 bar (7 psi)
Max. power	- 240R & Cup	181 kW (243 bhp; 247 PS) @ 8000rpm
	- Exige S	162.5 kW (218 bhp; 221 PS) @ 7800rpm
Max. torque	- 240R & Cup	236 Nm (174 lbf.ft; 24 kgf.m) @ 7000rpm
	- Exige S	215 Nm (158.6 lbf.ft; 22 kgf.m) @ 5500rpm
Power to weight ratio	- 240R & Cup	195 kW/t (261 hp/t; 266 PS/t)
Specific power output	- 240R & Cup	100.78 kW/l (136.97 hp/l; 137.4 PS/l)
Lubrication system supplement	- 240R & Cup	Accusump oil storage reservoir
Oil cooling		Twin front mounted oil coolers

Wheels & Tyres

Wheels	- type	- 240R	Lightweight forged alloy 5-spoke, satin black or high power silver
	- size - front	- 240R	7J x 16
	- rear	- 240R	8J x 17

Suspension

Ride height, mid laden, front/rear		- 240R & Cup	120/120 (2 x 75 kg pass., ½ tank fuel)
Spring rate	- front	- 240R & Cup	325 lb/in
	- rear	- 240R & Cup	425 lb/in
Front anti-roll bar		- 240R & Cup	5-position adjustable
Dampers		- 240R & Cup	Ohlins gas pressurised with remote reservoirs, 2-way damper adjustment, adjustable spring top platforms.

sn_Exige Supercharged supplement.indd 3 03/03/2006 11:32:34
Downloaded from www.Manualslib.com manuals search engine

EXIGE S/C.B - BODY

Exterior

All 50 of the 240R cars are finished in high metallic content paint in either Sport Yellow or Sport Black, reflecting the brand colour scheme of Lotus Sport. Yellow cars are complemented by black roadwheels, and black cars with high power silver wheels.

A Lotus Sport 240R decal is applied to the RH side of the rear transom.

Paint Codes:
Sport Yellow: Lotus code B112 Du Pont code X3454
Sport Black: Lotus code B111 Du Pont code X3453

240 Cup and Exige S models were offered in the complete range of colours with the front splitter, side intake scoops and the rear aerofoil (excluding support struts) finished in body colour rather than satin black. Exige S cars feature an 'Exige S' decal on the rear trabnsom, and an 'S' decal on each fron quarter panel. Both decals available in grey or silver dependent on body colour.

The chargecooler air intake scoop on the roof of Exige S models is fitted with an enlargement funnel mouth (without grille) for increased airflow and enhanced chargecooler efficiency.

Interior

Each Lotus Sport Exige 240R is individually numbered from 001 to 050, and identified by a Lotus Sport build plate styled after those used by Team Lotus for the Formula One cars. The plate is riveted to the chassis main side rail on the passenger side, and is engraved with the unique Limited Edition number.

The 240R features black leather sports seats embroidered on the head restraints with Exige branding in yellow, with further Lotus Sport yellow highlights on the seat sides, door trim inserts, gear lever gaiter and parking brake lever gaiter. Cup cars use black leather/suede/carbon effect trim with '06 M.Y. Probax sports seats.

240R and Cup cars are fitted with four point seat belt harnesses, with the shoulder straps anchored to a seat belt mounting frame (roll hoop) cross bar. The roll hoop and back stays on these cars are manufactured in T45 steel to allow easy conversion to U.K. motorsport MSA approval by the addition of an 'A' frame and diagonal brace.

All 240Rs are equipped with air conditioning, but is optional on other models.

sn_Exige Supercharged supplement.indd 4 03/03/2006 11:32:34
Downloaded from www.Manualslib.com manuals search engine

EXIGE S/C.C - FRONT SUSPENSION - 240R & CUP

Stiffened road springs front and rear are fitted on new Ohlins dampers featuring remote gas reservoirs, adjustable spring platforms and separate adjustments for compression and rebound damping. The spring platforms allow for lowering of the car to 120/120mm mid-laden ride height for track use, and the 22 compression and 60 rebound damper settings allow the characteristics to be fine tuned to individual requirements. The gas reservoir is mounted on the inboard crossbrace of the lower wishbone, and is connected to the damper body by a steel braided hose.

Compression (bump) damping is adjusted by turning the knob on the end of the gas reservoir canister: Turn clockwise to increase damping, and couterclockwise to decrease. Recommended settings are as follows:
Road use: 11 clicks from full hard
Track use: 11 clicks from full hard

Rebound damping is adjusted via a ribbed collar below the bottom spring seat: Turn clockwise (as viewed from below) to increase damping, and counterclockwise to decrease. Recommended settings are as follows:
Road use: 8 clicks from full hard
Track use: 8 clicks from full hard

The motorsport stiffened and 5-position adjustable front anti-roll bar provides further opportunity for fine tuning. To stiffen the bar, use a more forward hole, and to soften, use a more rearward hole. Recommeded setting:
Road use: Central hole
Track use: Central hole

Suspension geometry is unchanged - refer to Section TDQ.

EXIGE S/C.D - REAR SUSPENSION - 240R & CUP

Stiffened road springs front and rear are fitted on new Ohlins dampers featuring remote gas reservoirs, adjustable spring platforms and separate adjustments for compression and rebound damping. The spring platforms allow for lowering of the car to 120/120mm mid-laden ride height for track use, and the 22 compression and 60 rebound damper settings allow the characteristics to be fine tuned to individual requirements. On 240R models the gas reservoirs are mounted on the roll over bar backstays, and on Cup cars, on the toe-links. Each reservoir is connected to its damper body by a steel braided hose.

Compression (bump) damping is adjusted by turning the knob on the end of the gas reservoir canister: Turn clockwise to increase damping, and couterclockwise to decrease. Recommended settings are as follows:
Road use: 15 clicks from full hard
Track use: 10 clicks from full hard

Rebound damping is adjusted via a ribbed collar below the bottom spring seat: Turn clockwise (as viewed from below) to increase damping, and counterclockwise to decrease. Recommended settings are as follows:
Road use: 15 clicks from full hard
Track use: 12 clicks from full hard

Suspension geometry is unchanged - refer to Section TDQ. The Track Use Chassis Rear Brace Kit is fitted as detailed in sub-section DH.5.

EXIGE S/C.E - ENGINE

The 1.8 litre 2ZZ-GE engine with VVTL-i (Variable Valve Timing and Lift - intelligent) of the standard Exige is fitted with a low pressure Roots type Magnuson MP62 supercharger to provide up to 0.5 bar (7 psi) of boost pressure. The supercharger is mounted on the left hand side of the block and driven by a lengthened version of the multirib auxiliary belt. The unit is self contained and features helix twisted rotors to minimise output pressure variations, and maintenance free gearing and bearings, requiring no externally sourced lubrication. An integral by pass valve under ECU control, operates to recirculate air from the compressor outlet back to the inlet under conditions of idle and part throttle to the benefit of economy and quiet operation.

The supercharger is hung off the new intake manifold by two bolts in conjunction with eccentric sleeves in order to ensure stress free alignment. An alloy bracket supports the nose of the unit to the RH engine mounting plinth, and a tubular strut braces the intake end of the unit to the clutch slave cylinder mounting point.

sn_Exige Supercharged supplement.indd 5 03/03/2006 11:32:34
Downloaded from www.Manualslib.com manuals search engine

Supercharger & Ducting

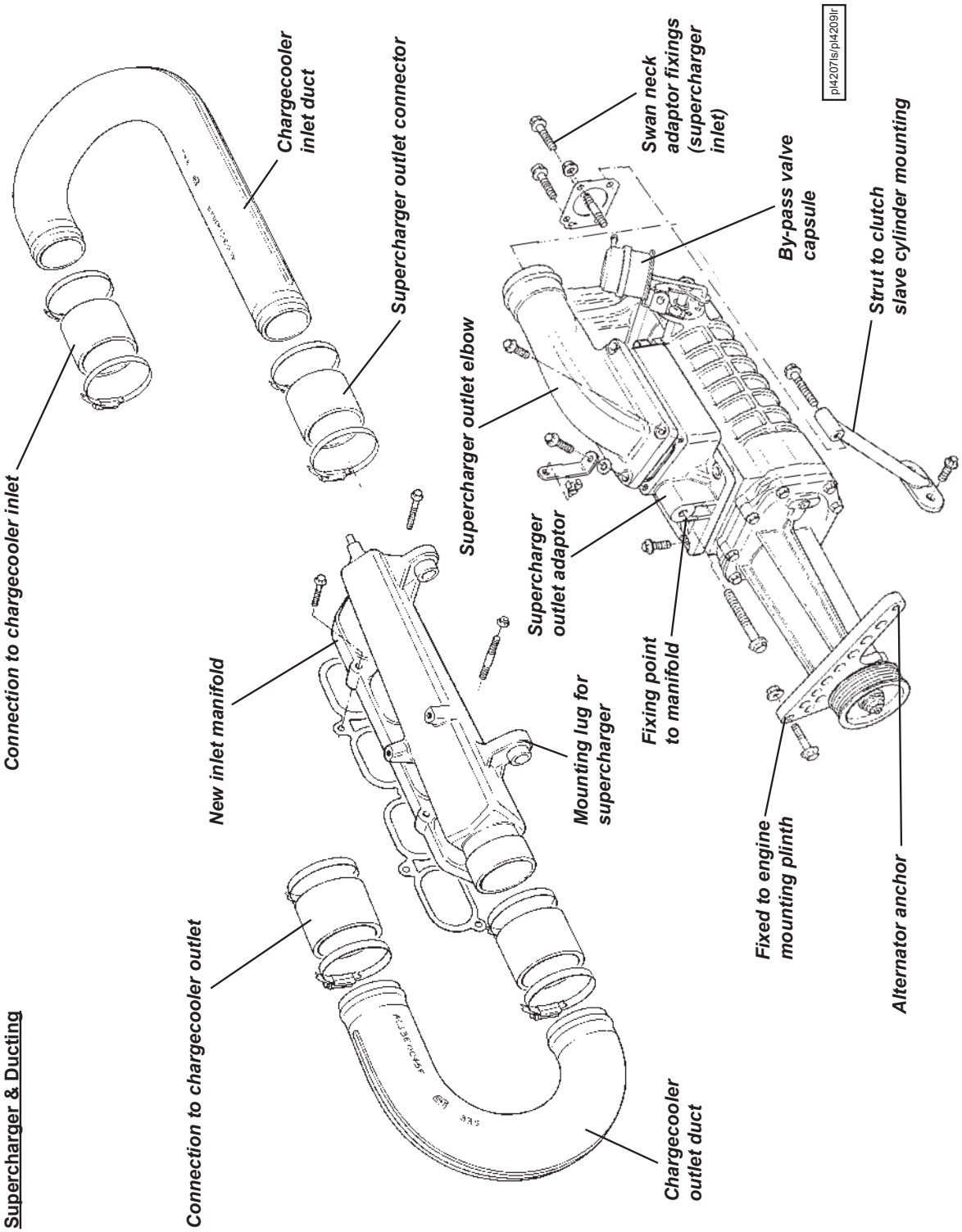

sn_Exige Supercharged supplement.indd 6 03/03/2006 11:32:35
Downloaded from www.Manualslib.com manuals search engine

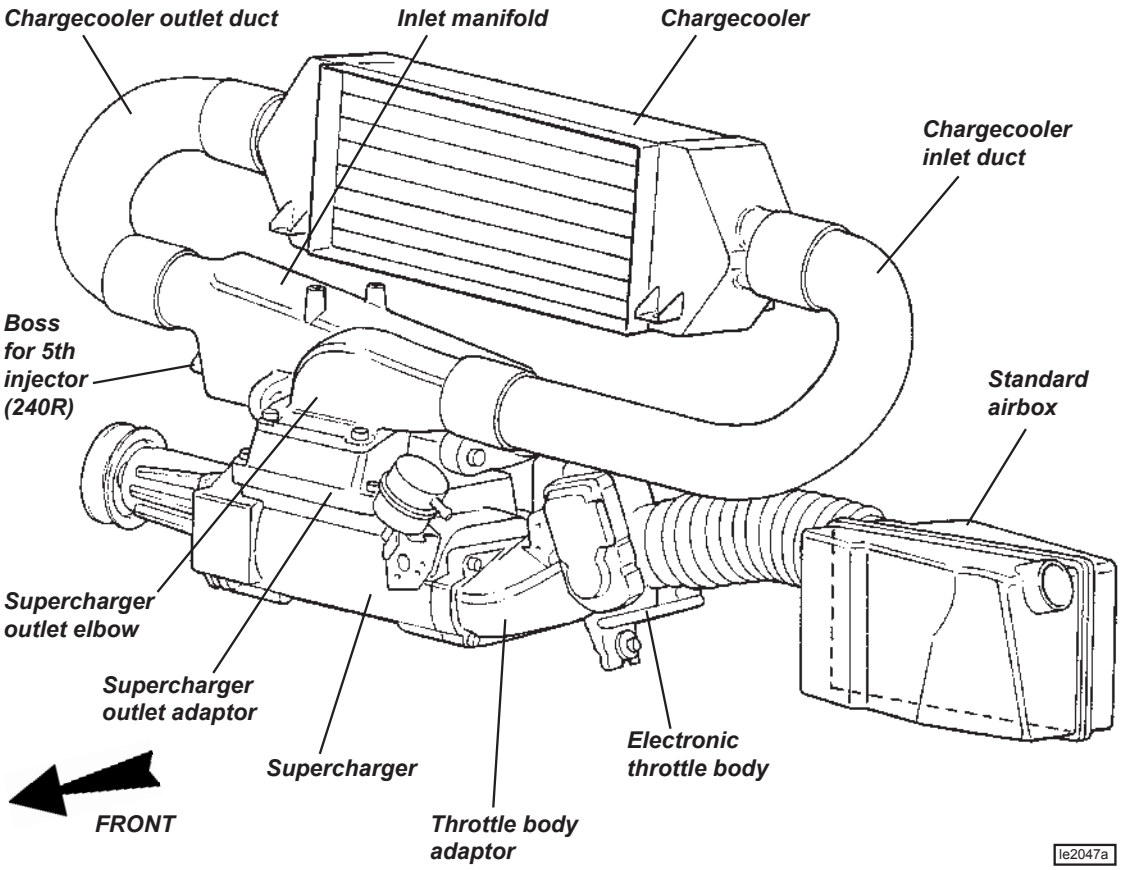

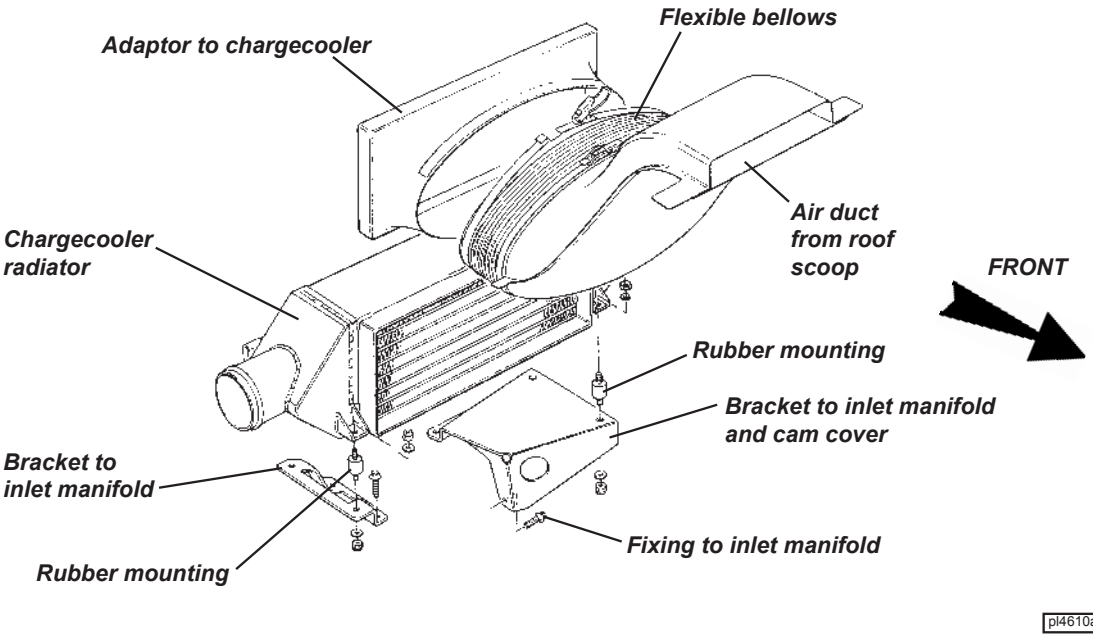

sn_Exige Supercharged supplement.indd 7 03/03/2006 11:32:37
Downloaded from www.Manualslib.com manuals search engine

Air is drawn from the standard air cleaner through the throttle body and adaptor and into the supercharger axial intake port. From the outlet port on the compressor top surface, the air is directed through a 'U' bend duct to the LH end of an air/air chargecooler rubber mounted above the engine, where airflow gathered from the roof duct is used to cool the compressed intake charge. The chargecooler uses four rubber bobbins attached to two mounting brackets themselves secured to the inlet manifold and cam cover. A charge air temperature sensor is mounted in the outlet tank of the chargecooler. The cooled air exiting from the RH end of the chargecooler flows via another 'U' bend duct into a cast alloy intake plenum/manifold. The whole intake tract has been kept as short as possible, and uses large diameter ducting and generously radiused bends to optimise airflow and efficiency to the particular benefit of throttle response and fuel economy.

A re-shaped breather pipe is used to connect the crankcase breather spigot to the cam cover and circumnavigate the supercharger.

On the 240R and Cup cars, a stainless steel 'level one' sports exhaust muffler (LOTAC05334) is fitted to provide an acoustic enhancement and features enlarged, slash cut tailpipes and a near 20% weight saving over the standard system. Exige S models use a stainless muffler with a single, oval shaped, tailpipe design.

240R models use 4 standard port fuel injectors together with an additional 5th injector mounted in the intake end of the inlet manifold. Cup cars use 4 special high-flow port injectors, and Exige S cars retain standard injectors. The Lotus engine management system is reprogrammed to suit each engine specification and incorporates additional functions to control the fifth injector (240R) and supercharger by-pass valve. The boost characteristics have allowed the switching point from low to high lift cam profile to be reduced from 6,000 to 4,000 rpm (at normal running temperature). 240R models use a mechanical cable operated throttle body, whereas the Cup and Exige S cars use '06 model electronic throttle. Twin front mounted oil/air coolers are fitted to all supercharged Exige.

Accusump - 240R & Cup 240

To provide protection against the possibility of oil starvation caused by the extreme g-forces possible with track use on slick tyres, the 240R and Cup cars are fitted with an Accusump oil storage system.

A 2-litre Accusump reservoir is mounted in the rear luggage compartment, plumbed into the LH oil cooler return hose at the front of the engine bay, with the connecting hose routed over the RH rear wheelarch. The device comprises an alloy cylinder divided by a sliding piston, one side of which is connected to the engine oil supply, with the other containing pressurised air. With the engine running, the cylinder is charged with oil provided by the engine oil pump, but if the pressure should drop for a short period due to oil pump pick up pipe exposure during extreme braking or cornering events, the accumulator air pressure forces the stored oil into the engine lubrication system to maintain continuity of oil supply until normal conditions are resumed.

A one-way valve at the oil cooler connection of the 'T'- piece ensures that the oil discharged from the Accusump is directed into the oil pump and not the cooler. An Electric Pressure Control (EPC) valve fitted at the connection to the Accusump cylinder, allows cylinder charging when oil pressure is above 35 - 40 psi, and cylinder discharging at engine oil pressures below 35 - 40 psi. The EPC is also linked to the ignition switch such that with the ignition switched on the valve is open to allow oil flow, and with ignition off the valve is closed to retain oil within the reservoir.

Normal Operation

When the ignition is turned on, the EPC valve on the Accusump is opened, allowing the pressurised oil stored in the reservoir to flow out into the engine and prime the oil galleries and bearings ready for start up. When the reservoir has been emptied, the pressure gauge on the end of the reservoir will indicate the pre-charge pressure which should be 7 - 15 psi.

When the engine is started, engine oil pressure will force the reservoir piston back, such that the reservoir air pressure gauge will indicate engine oil pressure, with the quantity of stored oil dependent on this pressure at any one time. With cold oil, 80 psi may be seen, but idling at normal running temperature should produce around 30 - 40 psi.

When the engine is stopped, the EPC valve closes and a quantity of oil pertaining to that oil pressure will be retained in the Accusump, ready for re-starting.

Routine Checks

Be aware that the indicated oil level on the dipstick will depend on the amount of oil stored in the Accusump, which itself is dependent on the both the Accusump pre-charge air pressure and the engine oil pressure when the ignition was switched off.

sn_Exige Supercharged supplement.indd 8 03/03/2006 11:32:37
Downloaded from www.Manualslib.com manuals search engine

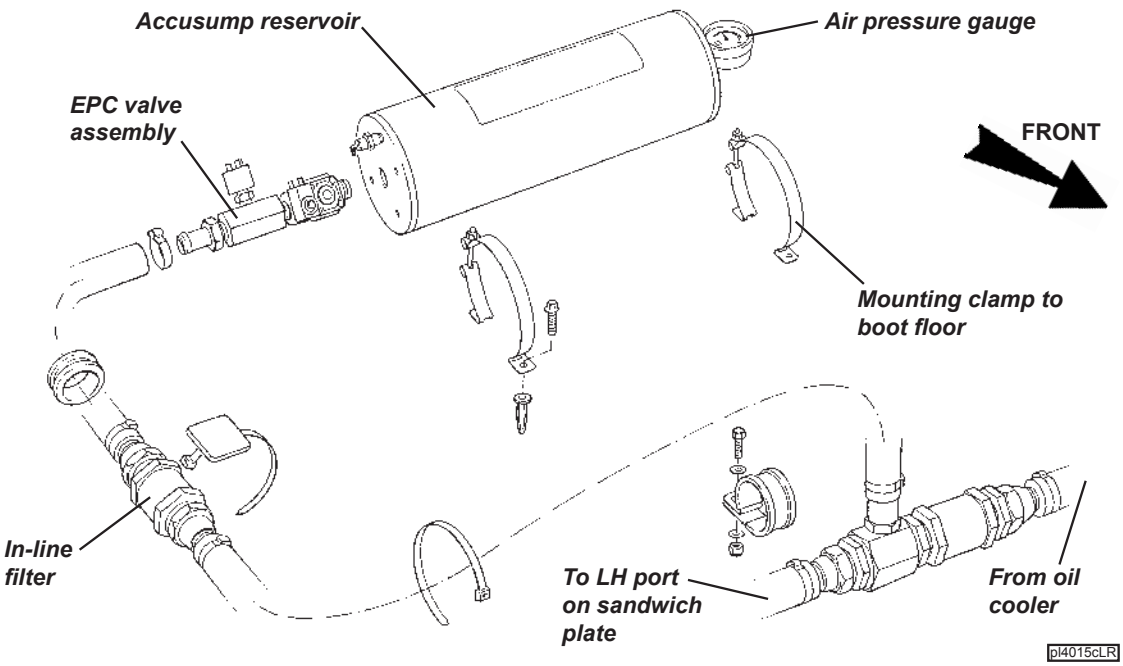

Before checking the oil level, the Accusump pre-charge pressure should first be checked; turn on the ignition to open the EPC valve and allow the stored oil to be discharged from the Accusump. The pressure gauge reading will drop during this discharge, but should then register 7 - 15 psi representing the pre-charge. If necessary, adjust the air pressure using tyre inflator equipment on the Schraeder valve adjacent to the gauge and set to 15 psi.

The oil level should now be above the top mark on the dipstick. To check for correct oil level, the engine should be started to charge the Accusump, and run to normal operating temperature until the Accusump pressure gauge registers 40 psi. If the engine is already hot, idle oil pressure may not be sufficient to open the Accusump valve, and the pressure gauge will continue to show 15 psi pre-charge. Increase engine rpm to open the valve. With the gauge showing 40 psi, turn off the engine. The EPC valve will then close and trap the normal hot idle quantity of oil in the Accusump cylinder. After a suitable oil drainback pause, the sump oil level may then be inspected on the disptick, and the level corrected to the top mark. It is important to maintain oil at this level to accommodate the oil transfer into the Accusump at pressures greater than 40 psi. Be aware that checking the oil level under any conditions other than 15 psi pre-charge and 40 psi oil pressure will produce inconsistent results.

Oil Changing

Before draining the sump, the ignition should first be switched on to open the EPC valve and allow the Accusump to discharge the stored oil into the sump. Check that a pressure of 7 - 15 psi remains in the Accusump at the end of this process, and if necessary top up the pressure using tyre inflating equipment on the Schraeder valve next to the gauge and set to 15 psi.

The oil can then be drained in the usual way, with the quantity contained in the oil cooler lines disregarded for the purposes of routine maintenance. If an engine failure has occurred, with possible debris contamination of oil hoses and coolers, it is recommended to replace both oil coolers, and to replace or thoroughly flush the feed and return hoses. At each service interval the in-line filter gauze in the hose between the Accusump and 'T'- piece, and located in the RH rear wheelarch, should be renewed.

After renewing and pre-filling the engine oil filter, refill the sump to about 10mm above the top mark on the dipstick. Start the engine and allow to idle. Do NOT rev the engine or drive the car. The Accusump will take up to 2 litres of oil from the sump to store within the cylinder. Continue to idle the engine until the Accusump pressure gauge drops to 40 psi (as the oil warms) and then switch off the engine. Top up the oil to the top mark on the dipstick.

sn_Exige Supercharged supplement.indd 9 03/03/2006 11:32:38
Downloaded from www.Manualslib.com manuals search engine

Supercharger Remove/Refit

To remove:

1. Remove the chargecooler together with inlet and outlet 'U' shaped ducts.

2. Remove the throttle body and vacuum/breather hose plumbing.

3. Using a 6-point socket, relieve auxiliary belt tension and remove the auxiliary belt. Remove the alternator top mounting bolt, slacken the lower, and swing down the alternator. Release the dipstick tube from the supercharger.

4. Using a strap wrench, remove the supercharger pulley retaining nut, and slide off the pulley.

5. Remove the support strut between the throttle body adaptor and the clutch slave cylinder. Slacken the pinch bolt securing the supercharger to the nose bracket. Remove the two bolts supporting the supercharger to the inlet manifold and withdraw the supercharger.

To refit:

1. With the supercharger nose bracket bolted to the engine mounting plinth, fit the upper fixing on the alternator to the nose bracket outer end (with 13.5mm spacer). This defines the position of the nose bracket. Tighten bracket to engine mounting plinth to 50 Nm. Remove alternator top bolt and swing down to allow supercharger to be fitted.

2. Prepare supercharger: Clean mating faces of supercharger and outlet adaptor using Betaclean 3900. Fit 'O' ring into groove in outlet adaptor and fit to supercharger using 6 off M8 x 25 setscrews with Permabond A130. On the fixing located inside the adaptor, Permabond should be applied over the entire thread length. Orientate the adaptor with the outlet pointing towards the rear of the car when fitted. Torque tighten all fixings to 25 Nm.
   Clean mating faces of outlet adaptor and outlet elbow using Betaclean 3900. Fit 'O' ring into groove in outlet adaptor face. Fit outlet elbow to point to LH side of car using 4 off M8 x 25 setscrews with a pipe clip bracket secured by both rearmost fixings. Tighten to 25 Nm.

3. Fit M8 stud B111E6081S into RH top (as viewed on face) fixing position in supercharger inlet flange. Clean mating face on supercharger and inlet adaptor using Betaclean 3900. Fit 'O' ring into groove in adaptor face and fit adaptor to supercharger using 2 off M8 x 30 flange head bolts in top positions and M8 flange nut on stud - all 25 Nm. Disregard 4th position at this stage.

4. Mount supercharger: With the pulley removed from the supercharger, slide the nose into the nose bracket until hard against the machined step. Support to the inlet manifold sliding bushes using M10 x 50 flange head bolts and Permabond A130, but do not tighten. Tighten the nose bracket socket head pinch bolt to 25 Nm.

5. Loosley fit the supercharger support strut between the inlet adaptor (M8 x 55 bolt with A130) and the clutch slave cylinder fixings (M8 x 25 with A130). Tighten the three support strut bolts to 25 Nm. Carefully tighten the two M10 x 50 flange head bolts to pull in the two spacers evenly to clamp against the supercharger.

6. Refit the alternator upper bolt and spacer and tighten to 25 Nm. Tighten the lower bolt to 25 Nm.

7. Fit the pulley to the supercharger with the longer boss towards the 'charger. Fit the nut onto the shaft, and use a strap wrench to hold the pulley whilst the nut is tightened to 61 Nm.

sn_Exige Supercharged supplement.indd 10 03/03/2006 11:32:38
Downloaded from www.Manualslib.com manuals search engine

8. Use a 6-point socket on the tensioner arm to allow fitment of the multirib accessory drive belt around the pulleys as shown, ensuring that the belt is correctly seated in all the ribbed pulleys.

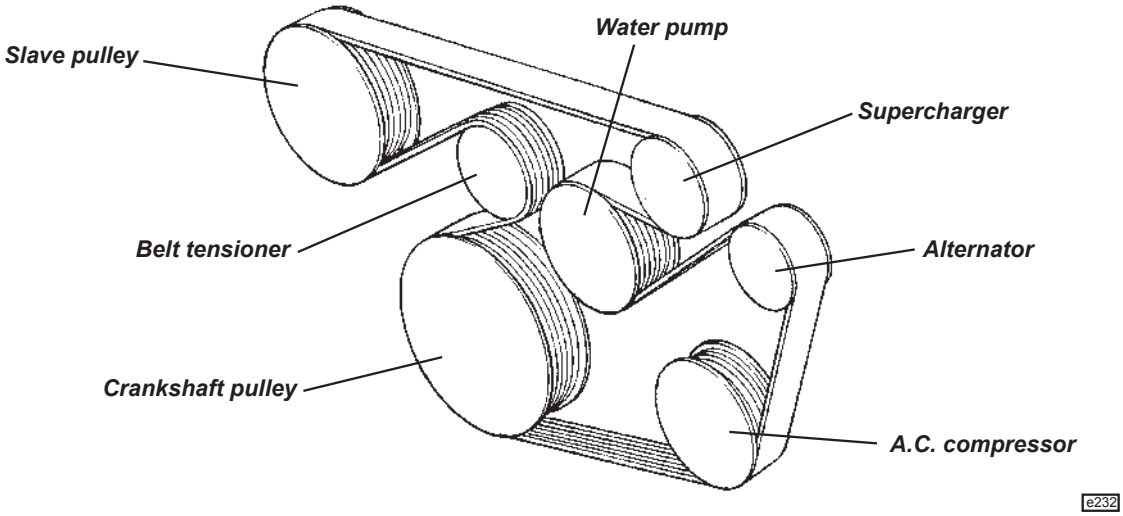

9. Refit other components in reverse order to removal.

Note areas of change compared with standard models;

Engine dipstick tube altered to avoid supercharger.
Crankcase breather pipe altered to avoid supercharger.
Relays on engine bulkhead move to avoid supercharger by-pass capsule
Charcoal canister moved from bulkhead to bracket on top of chassis right hand rear upright member to avoid alternator.

EXIGE S/C.G - WHEELS & TYRES

240R cars use lightweight forged alloy 5-spoke roadwheels at 7x16 and 8x17 are ½ inch wider, front and rear, than standard Exige wheels, but retain the standard insets of + 31.3 mm and + 38.0 mm. The wheels are finished in either Satin Black or High Power Silver dependent on body colour (see above). 'Lotus Sport' is moulded into one of the spokes of each wheel. Cup and Exige S models use standard Exige wheels finished in hi-power silver.

The Lotus specific, regular Exige Yokohama A048 tyres, identified by 'LTS', are fitted as standard.

EXIGE S/C.J - BRAKES

For 240R and Cup models, the braking system is uprated in the following respects:

- Motorsport brake pads are fitted front and rear;
- Steel braided brake hoses fitted all round;
- Front and rear brake callipers are finished in 'Sport Yellow';
- Hydraulic system filled with Castrol 'SRF' synthetic racing brake fluid. Over 500°F boiling point. Dot 4.

EXIGE S/C.K - COOLING

Twin front mounted oil/air coolers (std. Exige hot climate spec.) are fitted to all supercharged Exige models. An engine intake air chargecooler radiator is rubber mounted to the engine, with cooling airflow collected by the roof duct and directed via the tailgate panel and flexible bellows to the radiator, after which the hot air exhausts through the tailgate louvres.

sn_Exige Supercharged supplement.indd 11 03/03/2006 11:32:38
Downloaded from www.Manualslib.com manuals search engine

EXIGE S/C.O - MAINTENANCE & LUBRICATION

A Maintenance Schedule for supercharged cars is available under part number LSL460b.
Recommended lubricants are unchanged apart from:

- 240R & Cup cars: Brake Fluid; Castrol SRF
- Fuel; Unleaded 98 RON

Spark plugs are part number ALS3E6015F (NGK PFR7G) with 0.8mm (- 0.1, + 0) gap.

EXIGE S/C.Q - CLUTCH

240R and Cup cars use an uprated clutch cover assembly and a competition specification sintered metal friction plate. No routine maintenance is required other than annual renewal of the Castrol SRF hydraulic fluid.

EXIGE S/C.Z - MISCELLANEOUS

Supercharged models also differ from standard Exige in the following respects:

Engine dipstick tube altered to avoid supercharger.
Relays on engine bulkhead moved to avoid supercharger by-pass capsule.
Charcoal canister moved from bulkhead to bracket on top of chassis right hand rear upright member.

sn_Exige Supercharged supplement.indd 12 03/03/2006 11:32:38
Downloaded from www.Manualslib.com manuals search engine

EXIGE S/C.X - RETROFITMENT OF SUPERCHARGER

To retrofit the Magnuson MP62 supercharger and related engine systems to the standard Exige, proceed as follows. Note that throughout this section, the terms 'front', 'rear', 'left' and 'right' when referring to engine components are used in the convention of the flywheel end of the engine being the rear. The orientation of the engine as installed, results in the front of the engine being towards the right hand side of the car.

1. Remove the following parts:
   - Drain coolant;
   - Rear clamshell;
   - Charcoal canister, bracket and pipes;
   - Spark plug and injector covers;
   - Convoluted air intake trunking;
   - Throttle body;
   - Fuel rail with injectors (keep together); Seal apertures with tape;
   - Inlet manifold and moulded foam pads beneath; Seal apertures with tape;
   - Breather pipe between crankcase and cam cover; Dipstick tube; Seal apertures with tape;
   - Auxiliary drive belt and water pump pulley;
   - Alternator top mounting bolt and stabiliser bracket, and swing alternator outwards;
   - Engine wiring harness, ECM and mounting plate;

2. With the ECM mounting plate on a bench, mark out and cut the right hand top corner of the plate as shown. Further cut and drill the removed section to the dimensions shown, and fix to the ECM plate with an M6 x 25 screw, penny washer and plain nut.

3. Fit an engine lifting hook T000T1437S to the LH front of the cylinder head using bolt T000T1440S and support the engine weight to allow the RH engine rubber mounting to be removed: Remove the engine rubber mounting with pressed steel and alloy brackets as an assembly.

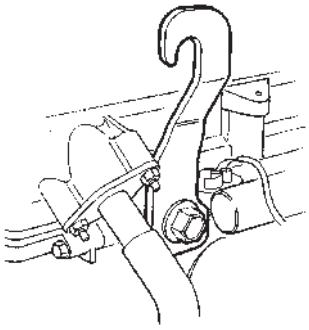

4. To allow access to the rearmost fixing of the engine mounting plinth on the front of the engine, it is necessary to release the exhaust manifold and EGR pipe fixings: Remove the EGR pipe clip from the timing chain cover. Remove the exhaust manifold upper heat shield. Remove the two outermost nuts retaining the exhaust manifold. Slacken the remaining 3 manifold bolts.
   Release the four bolts and remove the engine mounting plinth. Replace with the modified version using original fixings, and with Loctite 5910 (A121L0077H) sealant applied to the fixing by the EGR pipe. Tighten all four bolts to 52 Nm.
   Refit exhaust manifold using Permabond A130 threadlock on the fixings and tighten to 52 Nm. Refit heat shield using A130 and 20 Nm. Refit EGR pipe clamp to 27 Nm.

5. Remove the engine rubber mounting from the pressed steel bracket and replace with new rubber mounting ALS3E0038F (52 Nm). Refit the engine mounting assembly to the engine and chassis and remove engine support equipment.

6. Remove and discard breather spout from LH side of crankcase, but retain connector hose. Fit new spout using original fixings (10 Nm) and refit connector hose. Fit new breather pipe into connector hose and to cam cover using original fixings. Fit new dipstick tube into position.

7. From inlet manifold jointface on cylinder head, remove and discard the long stud at the rear end of the face. Fit new M8 x 25 stud (10 Nm) to the central fixing position between ports 2 and 3. Slacken the screw securing the VVT valve to the LH front of the head to allow it to be re-orientated to clear the new

sn_Exige Supercharged supplement.indd 13 03/03/2006 11:32:39
Downloaded from www.Manualslib.com manuals search engine

manifold.
Fit the new manifold and retain with the original two top fixings using Permabond A130. Do not fully tighten. Use new flange head bolt A116W5238F with Permabond A130 at the rearmost fixing point. Take the nut previously fitted on the foremost stud, and fit instead to the new stud at the centre bottom fixing (with Permabond A130). Take the nut previously fitted on the centre bottom stud, and fit instead to the foremost stud using A130. Progressively tighten all fixings to 27 Nm. Secure the VVT valve to 10 Nm.

8. Lay the new engine harness in position with the injector portion in the channel between inlet manifold and cylinder head with injector breakouts uppermost and aligned with the injector ports. Route the harness between the new breather pipe and inlet manifold, following a tight line down beside the cylinder head and block to the back of the alternator.

9. Refit the injector rail taking care to correctly seat the injectors. Ensure the spacers are in place before securing with the 2 x M8 fixings - 20 Nm. Secure the fuel pipe to the cam cover - 9 Nm.

10. Remove the four coil packs and replace the spark plugs with the new PFR7G items. Torque to 18 Nm. Refit coil packs to 9 Nm.

11. Refit all connectors on new harness.

12. Fit supercharger nose bracket to engine mounting plinth with new M10 x 50 flange head bolt and M10 flange nut hand tight. Fit upper fixing on alternator to nose bracket outer end using the 13.5mm spacer and M8 x 55 flange head bolt. This defines the position of the nose bracket. Tighten bracket to engine mounting plinth to 50 Nm. Remove alternator top bolt to allow supercharger to be fitted.

13. Prepare supercharger: Clean mating faces of supercharger and outlet adaptor using Betaclean 3900. Fit 'O' ring into groove in outlet adaptor and fit to supercharger using 6 off M8 x 25 setscrews with Permabond A130. On the fixing located inside the adaptor, Permabond should be applied over the entire thread length. Orientate the adaptor with the outlet pointing towards the rear of the car when fitted. Torque tighten all fixings to 25 Nm.
Clean mating faces of outlet adaptor and outlet elbow using Betaclean 3900. Fit 'O' ring into groove in outlet adaptor face. Fit outlet elbow to point to LH side of car using 4 off M8 x 25 setscrews with a pipe clip bracket secured by both rearmost fixings. Tighten to 25 Nm. Fit double pipe clip into front side of each of the two brackets.

14. Fit M8 stud B111E6081S into RH top (as viewed on face) fixing position in supercharger inlet flange. Clean mating face on supercharger and inlet adaptor using Betaclean 3900. Fit 'O' ring into groove in adaptor face and fit adaptor to supercharger using 2 off M8 x 30 flange head bolts in top positions and M8 flange nut on stud - all 25 Nm. Disregard 4th position at this stage.

15. Fit original throttle body isolator to inlet adaptor using the clockwise choice of fitting position, with original fixings tightened to 10 Nm. Fit the original throttle body to the isolator using original fixings tightened to 10 Nm.

16. Mount supercharger: With the pulley removed from the supercharger, slide the nose into the nose bracket until hard against the machined step. Support to the inlet manifold sliding bushes using M10 x 50 flange head bolts and Permabond A130, but do not tighten. Tighten the nose bracket socket head pinch bolt to 25 Nm.

17. Loosley fit the supercharger support strut between the inlet adaptor (M8 x 55 bolt with A130) and the clutch slave cylinder new fixings (M8 x 25 with A130). Tighten the three support strut bolts to 25 Nm. Carefully tighten the two M10 x 50 flange head bolts to pull in the two spacers evenly to clamp against the supercharger.

18. Refit the alternator upper bolt and spacer and tighten to 25 Nm. Tighten the lower bolt to 25 Nm.

19. Fit the pulley to the supercharger with the longer boss towards the 'charger. Fit the nut onto the shaft, and

sn_Exige Supercharged supplement.indd 14 03/03/2006 11:32:39
Downloaded from www.Manualslib.com manuals search engine

use a strap wrench to hold the pulley whilst the nut is tightened to 61 Nm.

20. Use a 6-point socket on the tensioner arm to allow fitment of the new multirib accessory drive belt around the pulleys as shown, ensuring that the belt is correctly seated in all the ribbed pulleys.

21. Fit two rubber mountings to both of the chargecooler mounting brackets using spring washers and M8 Nyloc nuts. Fit the LH bracket to the inlet manifold and cam cover using Permabond A130 on both screw threads. Tighten to 25 Nm. Fit the RH bracket to the inlet manifold bosses in a similar manner.

22. Fit the MAP sensor to the chargecooler using the M6 x 16 setscrew, ensuring that the sensor seal is intact. Fit the chargecooler to the rubber mounts and secure with spring washers and Nyloc nuts tightened to 25 Nm.

23. Fit the chargecooler intake 'U' shaped duct A128E0008 between the supercharger outlet and chargecooler using the connector hoses and worm drive clamps. In a similar manner, fit the outlet duct A128E0011 between the chargecooler and inlet manifold.

sn_Exige Supercharged supplement.indd 15 03/03/2006 11:32:39
Downloaded from www.Manualslib.com manuals search engine

SUPPLEMENT

2-Eleven

	Sub-Section	Page
Concept & Overview	2-Eleven.#	2
Technical Data	2-Eleven.TD	3
Chassis	2-Eleven.A	5
Body	2-Eleven.B	5
Front Suspension	2-Eleven.C	9
Rear Suspension	2-Eleven.D	9
Engine	2-Eleven.E	11
Wheels & Tyres	2-Eleven.G	17
Brakes	2-Eleven.J	17
Cooling	2-Eleven.K	18
Fuel System	2-Eleven.L	19
Electrical	2-Eleven.M	20
Maintenance & Lubrication	2-Eleven.O	26
Miscellaneous	2-Eleven.Z	26
Circuit Diagrams Index	-	27

Downloaded from www.Manualslib.com manuals search engine

2-ELEVEN.# - CONCEPT & OVERVIEW

In March 2007, Lotus announced the Lotus 2-Eleven (255 PS) designed for the motorsport enthusiast, and aiming to provide a high fun factor from a lightweight, high performance, distinctively styled vehicle, suitable as a basis for various sporting disciplines, as well as offering U.K. customers the option of a unique road going experience. The cars to be produced in small numbers for the U.K. and certain overeas territories tailored to customer specification from an extensive options list.

The running gear is based on the Exige S, and shares that car's basic chassis and supercharged powertrain componentry, but uses a new chargecooler arrangement and peripheral systems. Unique engine programming is used in conjunction with 4 high flow fuel injectors as used on Exige Cup cars. The open top lightweight body is designed to be amenable to economic accident repair and is supplemented by an FIA compliant roll over bar, and strut mounted rear aerofoil acting directly onto the rear subframe. Options include a race specification carbon fibre adjustable rear aerofoil combined with an enlarged front splitter for enhanced aerodynamic balanced downforce, and Ohlins fully adjustable spring/damper units with remote reservoirs.

This supplement describes the unique features of the 2-Eleven, and refers to other models where componentry is shared.

Lotus 2-Eleven (road spec.)

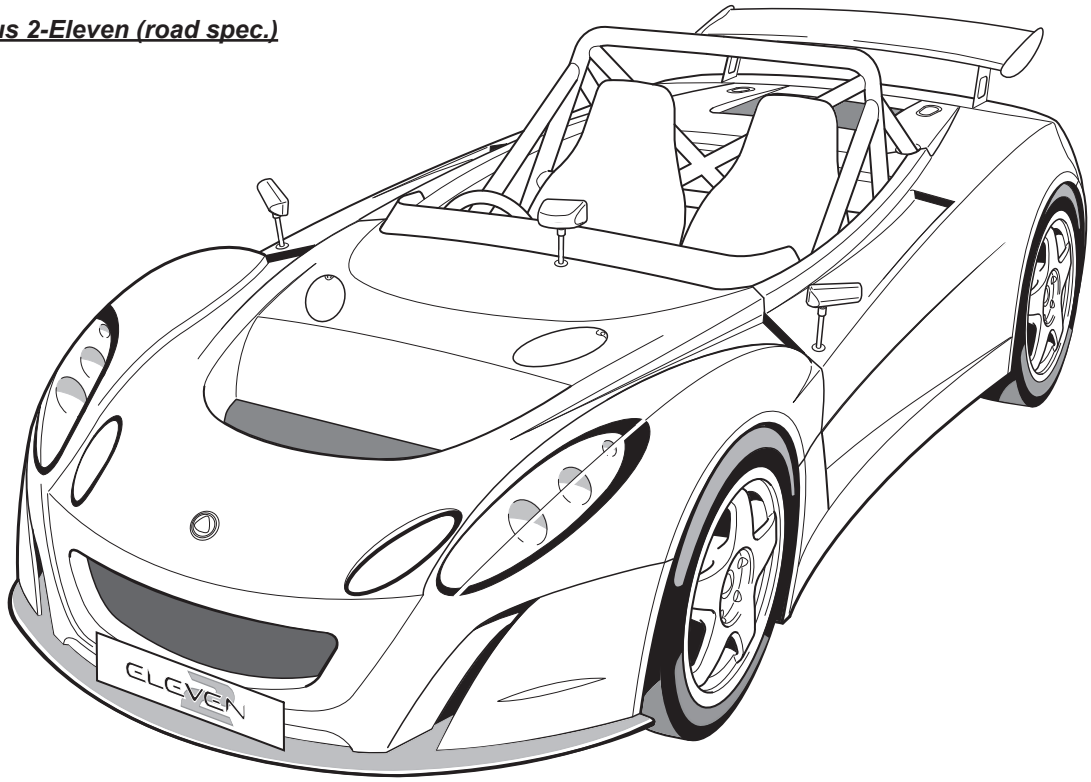

2-11 fq road black

Downloaded from www.Manualslib.com manuals search engine

2-ELEVEN.TD - TECHNICAL DATA (Where different to standard naturally aspirated Exige)

Identification

The VIN coding of the 2-Eleven includes the following identifying characters:
Character 4 (engine type); 2-Eleven 2ZZ supercharged 255 bhp = N
Character 6/7/8 (vehicle type); 2-Eleven = 123
Character 12 (chassis specification); U.K. SVA RHD = F
U.K. SVA LHD = G
Track only LHD = H
Track only RHD = J

Note that the VIN label on the 2-Eleven is located on the cabin rear bulkhead, behind the driver's seat.

Character 13 (model); 2-Eleven = 2

Dimensions

Overall length - SVA	3822 mm
Overall width - excluding mirrors	1709 mm
- including mirrors	1735 mm (approx.)
Overall height (at kerb weight)	1112 mm
Ground clearance	95 mm
Dry weight - base car	670 kg
Unladen weight - SVA	745 kg. incl. full fuel tank
Maximum weight	895 kg. incl. occupants

Capacities

Engine oil; refill incl. filter & Accusump	6.4 litre

(The oil cooler circuit contains an additional 3.5 litres, but this volume is not normally drained during routine servicing)

Engine

Forced induction	Magnuson MP62 supercharger with integral by-pass valve. Air/air chargecooler.
Maximum boost pressure	0.5 bar (7 psi)
Max. power	255 PS (252 bhp; 188 kW) @ 8000rpm
Max. torque	242 Nm (179 lbf.ft; 24.7 kgf.m) @ 7000rpm
Power to weight ratio - base car	376 bhp/tonne
Specific power output	142 PS/l (140 bhp/l; 105 kW/l)
Lubrication system supplement	Accusump oil storage reservoir
Oil cooling	Twin front mounted oil coolers

Clutch

Spring cover assembly	Uprated diaphragm spring
Friction plate	Uprated cush drive springs

Wheels & Tyres

Wheels	- type	- std.		Cast alloy, 8 x Y-spoke (as Exige)
		- option		Lightweight forged alloy 5-spoke
	- size	- std.	- front	6.5J x 16
			- rear	7.5J x 17
		- option	- front	7J x 16
		- rear	- rear	8J x 17

Downloaded from www.Manualslib.com manuals search engine

Suspension

General	Unique front top wishbones and steering arms. Chassis rear brace
Ride height, mid-laden, front/rear	100/110 (2 x 75 kg pass., ½ tank fuel)
Option	Siffened, 5-position adjustable front anti-roll bar with Ohlins gas pressurised, 2-way adjustable, remote reservoir damp ers, with adjustable spring top platforms.
Suspension Geometry (at mid-laden ride height)	
Front	
Castor	+ 3.5° to + 4.5° (+ 3°30' to + 4°30') max. side/side 0.4° (0°24')
Camber	- 1.5° to - 1.3° (- 1°30' to - 1°18') max. side/side 0.4° (0°24')
Alignment	- 0.4 mm to zero
Steering axis inclination	11°54' to 12°06'
Rear	
Camber	- 2.75° to - 2.48° (- 2°45' to - 2°29')
Alignment	1.2 to 1.5 mm toe-in each side

Electrical

Battery	- type	Odyssey PC680
	- rating	PHCA 5 second 680 amps
	- capacity (20 hr)	17 ah
	- cold cranking	220 amps
	- reserve capacity	24 minutes
	- dimensions	L185; W 79; H 187 mm
	- weight	7 kg

Downloaded from www.Manualslib.com manuals search engine

2-ELEVEN.A - CHASSIS

The 2-Eleven uses the basic chassis 'tub' of the Elise/Exige with minor revisions including;

- Deletion of door hinge upright extrusions on each end of scuttle beam.
- Full height side members (no cabin access cut down).
- Revised pick up points for the roll over bar.
- Addition of a body side attachment panel to the lower edge of each chassis rail sill extension.

The front crash structure is as Elise/Exige with minor fettling revisions, and the galvanised steel rear subframe differs only in respect of incidental fixings.

Roll-Over Bar

The tubular steel roll-over bar is substantially cross-braced, including provision for shoulder harness anchorage, and features integral bracing struts to both front and rear. The feet of the main hoop are bolted to tapping plates riveted into the top surface of the chassis side rails, with the front bracing struts locating against the joint between the side rail top and scuttle cross-beam and secured by similar riveted tapping plates. The rear bracing struts use a single fixing bolt at each side to secure to the rear subframe.

The roll-over bar complies with FIA requirements for international motorsport, but note that any additions or modifications to the 'bar may invalidate such compliance.

2-ELEVEN.B - BODY

On the 2-Eleven, the rear transom/bumper, body exterior side panels, ‘A’ panels, front splitter and splitter end support panels and the single panel comprising the whole of the nose section and front wings, are secured by threaded fasteners to permit easy removal for access to chassis or powertrain components, and allow simple and economic accident repair. The composite body inner sides, together with the alloy sheet front and rear cabin bulkheads and rear scuttle panel, are secured with an elastomeric adhesive.

Screw fixed body panels

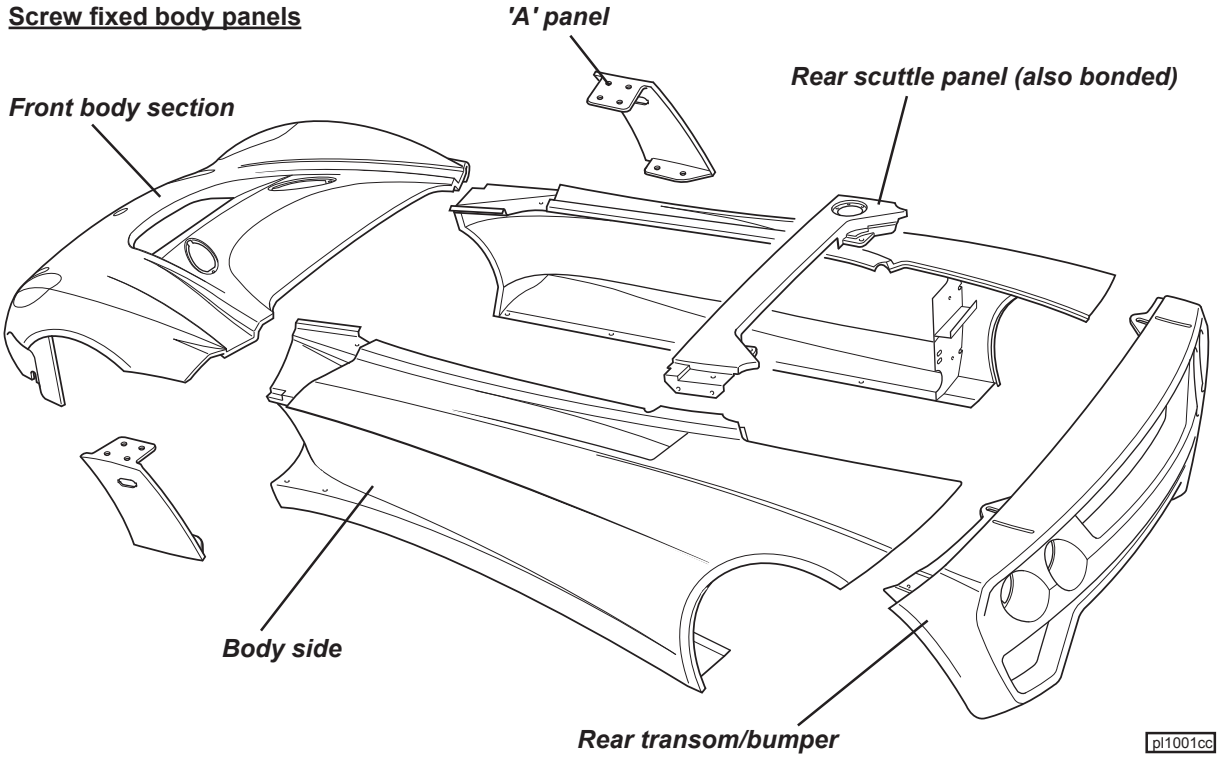

Downloaded from www.Manualslib.com manuals search engine

Bonded Body Panels

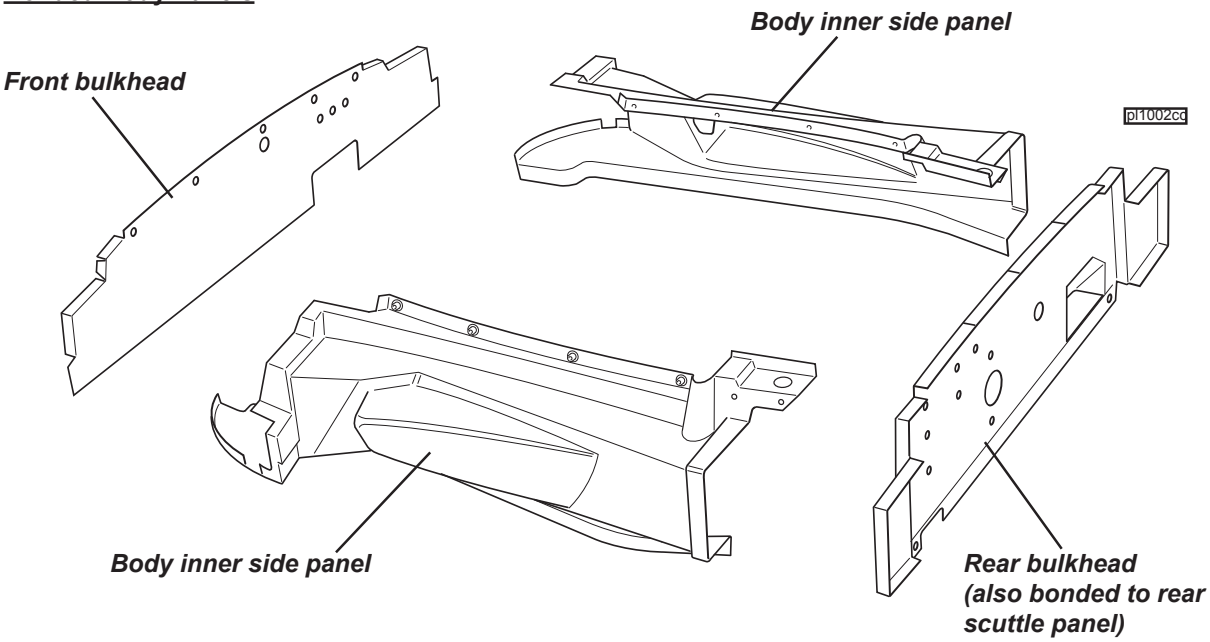

All composite panels on the 2-Eleven are designed for light weight consistent with aerodynamic function, with some panels featuring core mat technology to provide a sandwich construction for enhanced stiffness. All panels are nevertheless vulnerable to damage caused by inappropriate subjection to bodyweight or other misapplied forces.

Note: The 2-Eleven is not equipped with conventional shock absorbing bumpers, so extra care should be taken when parking to guard against body damage. The Lotus 2-Eleven does not offer the same kind and degree of impact resistance or energy absorption afforded by normal bumper systems. Some panels, including the front quarter panels and 'A' panels, have sacrificial functions to help reduce repair costs and damage to the front body section in minor accidents.

Care is also required, due to the low ground clearance, to guard against chassis underside damage caused by ramps, kerbs and road humps. Note that the front splitter panel is constructed from timber composite, sealed by a layer of resin, and that the occasional grounding of this panel, which is a normal occurrence under track conditions, will cause erosion of the outer layer, requiring periodic repair (water absorption may promote eventual de-lamination) or replacement.

Engine Lid

A removable panel in the rear body is secured by two recessed 'Aerocatches' and provides access to the engine for maintenance operations.

To remove the cover, at each latch, press the smaller section of the flush fitting latch plate to allow the latch plate lever to spring up. Fully raise the lever to release the latch. Lift the rear of the panel, and then draw rearwards to disengage the front flange from beneath the rear scuttle, before lifting the panel forwards and over the rear aerofoil. Park the panel where it is unlikely to be damaged or blown away by wind.

To refit, rest the panel on the two rubber buffers at the front of the body aperture and slide forwards to engage the tang bracket at each side of the panel, beneath the body edge adjacent to the roll bar backstays, and the panel front flange beneath the rear scuttle edge. Press down the two latch levers to engage the retaining pins, finally pressing the small buttons to allow the lever ends to be captured. Ensure that each lever is correctly clipped shut, and flush with the body surface.

Rear Transom/Bumper Panel

The rear transom panel is screw fixed in the following manner:

- At each side, an angle bracket bonded to the underside of the transom top surface is secured by two screws to the aerofoil mounting strut.
- A row of screws secures the lower edge of the panel to the muffler alloy heatshield, which is itself screwed to the rear subframe.

Downloaded from www.Manualslib.com manuals search engine

- At each side, two screws pass through the transom end flange into captive nuts in the body side panel.

Rear Scuttle Panel

The rear scuttle panel is fixed at each side by two horizontally disposed M6 screws into bond nuts on the body side panel, and is bonded along the top edge of the rear bulkhead.

Body Side Panel

The body side panels are secured by screw fasteners for ease of access and replacement. Each panel is retained as follows:

- The top edge of the body outer side panel lips over the body inner side panel, to which it is fixed with four screws engaging with captive nuts in the inner panel.
- A single screw passes from beneath, through the end of the rear bulkhead capping rail into a captive nut in the side panel.
- The lower edge of the body side is secured to four threaded inserts in a chassis extension flange.
- At the front of the rear wheelarch, two screws secure the side panel baffle/stiffener to a vertical angle bracket bolted to the main chassis rail.
- At the rear end of the panel, two screws pass from beneath, through the rear transom flange into captive nuts in the body side.
- At the front of the body side, two screws pass upwards into captive nuts in the rear end of the front body panel.

'A' Panels

At the front of each body side, a separate 'A' panel is used to form a duct for air exhausting from the front wheelarch. Each panel is secured by four screws at the top (2 into the body side, 2 into the front body panel), and 2 screws into the body side sill at the bottom.

Front Quarter Panels

A front quarter panel is fitted ahead of each front wheel and forms a mounting and duct for the oil cooler, as well as tying the front corner of the body to the splitter panel. The quarter panel is fixed by:

- 2 screws from beneath, through the splitter into captive nuts in the quarter panel lower flange.
- 2 screws down through the front body flange into captive nuts in the quarter panel upper flange.

Front Wheelarch Shields

A small moulded plastic panel is fitted within each front wheelarch, fixed between the body side and radiator mounting panel, and provides protection for the cooling and brake system components.

Front Undertray

An alloy sheet undertray is fitted beneath the nose, and stabilises the front body, splitter panel, and crash structure to the front of the chassis. The undertray is secured by:

- 3 screws into the front edge of the chassis (also slots into the extrusion).
- 3 screws and nuts at each side into the lower flange of the crash structure.
- 5 fixings around the front edge, passing through the splitter into captive nuts in the front body flange.
- 2 screws and nuts to a central support bracket from the crash structure.
- 1 screw each side to the splitter panel.

Front Splitter Panel

A flat timber composite splitter panel is mounted beneath the nose to cleanly split the airflow above and below the underside of the car to optimise aerodynamic downforce whilst minimising drag. A road and race version of the panel are designed to balance the forces produced by the two types of rear aerofoil. Note that the front splitter panel is constructed from timber composite, sealed by a layer of resin, and that the occasional grounding of this panel, which is a normal occurrence under track conditions, will cause erosion of the outer layer, requiring periodic repair or replacement.

The panel is secured by:

- Undertray fixings as listed above.
- 2 screws at each side to the front quarter panel.

Downloaded from www.Manualslib.com manuals search engine

Front Body Panel

To remove the front body panel for access to the radiator, front suspension, brake control system and other front chassis components, proceed as follows:

- Release each of the two oil coolers from the front body by removing the two securing screws.
- Remove the aero screen to prevent damage, or at least release the two rearmost fixings at each side securing the screen to the body sides.
- Remove the single screw each side from within the front corner of the cockpit into a captive nut in the body.
- Remove the two screws each side from within the 'A' panel duct into captive nuts in the body.
- Remove the two screws each side fixing to the top of the front quarter panels.
- Remove the single screw each side from beneath, fixing the splitter panel to the body inboard of the oil coolers.
- From beneath the nose, remove the 5 screws securing the splitter panel to the body flange.
- Carefully lift the front body from the car, disconnecting the wiring harness if applicable.

Note that the front turn lamps (if fitted) are bonded into the front body using Betaseal products.

Rear Aerofoil

Two types of rear aerofoil are available. For road going cars, a fixed angle GFRP composite curved blade with integral end plates is used, whereas the track optimised aerofoil is made using carbon fibre with alloy end plates, and has provision for adjusting the angle of incidence. Each type should only be used with the corresponding front splitter panel in order to maintain the correct aerodynamic balance.

Both aerofoil types are mounted via machined alloy support plates to the top surface of the rear subframe. Each plate uses an angle bracket at its base to secure to the subframe, and two of the same angle bracket to brace the plate to the rear clamshell through which the plate penetrates. A further angle bracket secures the blade to the top of the support plate.

The track type aerofoil angle of attack may be adjusted by loosening the rear pivot screw on each support plinth, and removing the front fixing screw. Tilt the blade to the desired angle, and refit the screw in the most appropriate fixing hole. Tighten all fixings securely.

Slots are also provided on the endplates to allow correct horizontal alignment to be maintained after adjustment of blade angle.

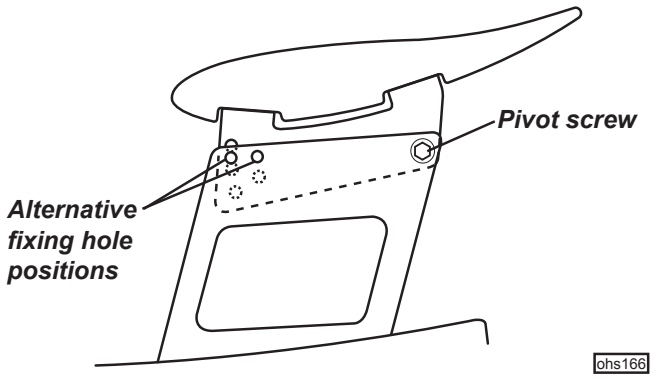

Exterior

The Launch Edition of the 2-Eleven is finished in a two tone combination of B111 Lotus Sport Black and B115 Arctic Silver, with yellow/black/silver styling decals. A '2 Eleven' decal is applied to the rear transom panel, with optional larger decals on each body side. Stone chip film is fitted to vulnerable areas.

Mirrors

A central rear view mirror is mounted on the top of the cabin front scuttle, with an additional mirror on both the driver's and passenger's body sides. Each of the convex glass mirrors may be adjusted after slackening (turn anticlockwise from above) the knurled clamp nut below the mirror.

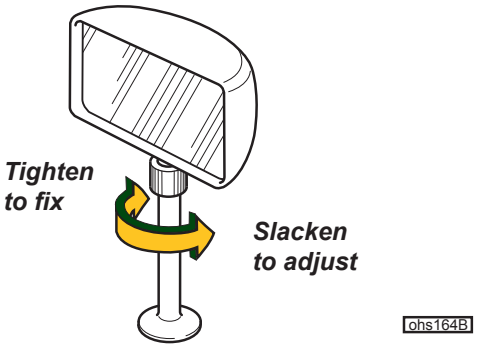

Downloaded from www.Manualslib.com manuals search engine

2-ELEVEN.C - FRONT SUSPENSION

The front suspension is based on standard Elise/Exige componentry, but the angle of the top wishbone ball joint housing differs to better suit the lowered ride height. For the same reason, re-configured steering arms are fitted, being machined from solid EN16 steel billets, and heat treated.

On cars with the optional 'Sports Pack', revised road springs front and rear are fitted on Ohlins dampers featuring remote gas reservoirs, adjustable spring platforms and separate adjustments for compression and rebound damping. The 22 compression and 60 rebound damper settings allow the characteristics to be fine tuned to individual requirements, whilst the threaded spring platforms allow adjustment of ride height and corner weighting. Recommended front/rear mid-laden ride height for both road and track use is 100/110mm. Front height should always lie within the range 95 - 110mm, with a corresponding rear setting 5 - 10mm higher.

Each gas reservoir is mounted on the side of the crash structure, and is connected to its damper body by a steel braided hose. Compression (bump) damping is adjusted by turning the knob on the end of the gas reservoir canister: Turn clockwise to increase damping, and counterclockwise to decrease. Recommended settings are as follows:

Road use: 11 clicks from full hard
Track use: 11 clicks from full hard

Rebound damping is adjusted via a ribbed collar below the bottom spring seat: Turn clockwise (as viewed from below) to increase damping, and counterclockwise to decrease. Recommended settings are as follows:

Road use: 8 clicks from full hard
Track use: 8 clicks from full hard

The motorsport stiffened and 5-position adjustable front anti-roll bar (included as part of the Sport Pack) provides further opportunity for fine tuning. To stiffen the bar, use a more forward hole, and to soften, use a more rearward hole. Recommended setting:

Road use: Central hole
Track use: Central hole

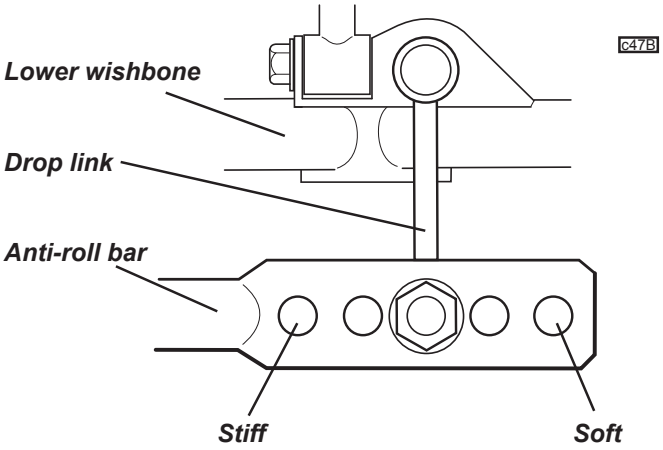

Note that the hard Nylon type chassis mountings used with this 'bar require periodic lubrication with MoS_2 grease at least every 3,000m (5,000km). For suspension geometry refer to Section 2-ELEVEN.TD - TECHNICAL DATA.

2-ELEVEN.D - REAR SUSPENSION

On cars with the optional 'Sports Pack', revised road springs front and rear are fitted on Ohlins dampers featuring remote gas reservoirs, adjustable spring platforms and separate adjustments for compression and rebound damping. Recommended front/rear mid-laden ride height for both road and track use is 100/110mm. Front height should always lie within the range 95 - 110mm, with a corresponding rear setting 5 - 10mm higher.

The 22 compression and 60 rebound damper settings allow the characteristics to be fine tuned to individual requirements. Each gas reservoir is mounted on the rear subframe and is connected to its damper body by a steel braided hose.

Downloaded from www.Manualslib.com manuals search engine

Compression (bump) damping is adjusted by turning the knob on the end of the gas reservoir canister: Turn clockwise to increase damping, and couterclockwise to decrease. Recommended settings are as follows:

Road use: 15 clicks from full hard
Track use: 10 clicks from full hard

Rebound damping is adjusted via a ribbed collar below the bottom spring seat: Turn clockwise (as viewed from below) to increase damping, and counterclockwise to decrease. Recommended settings are as follows:

Road use: 15 clicks from full hard
Track use: 12 clicks from full hard

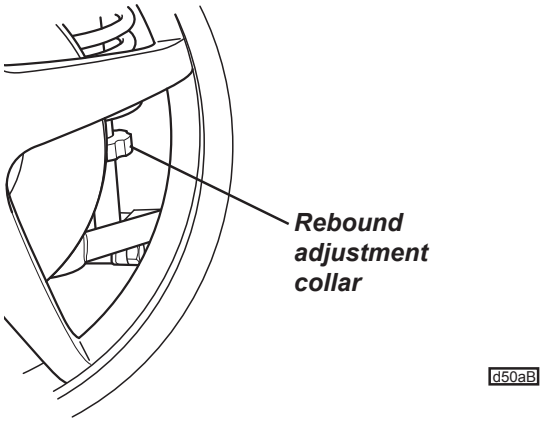

All cars are equipped with through bolted spherical joints on the inboard ends of the rear toe-links, allied to a tubular steel crossbrace connecting the rear sides of these joints to provide 'double shear' support. For suspension geometry refer to Section 2-ELEVEN.TD - TECHNICAL DATA.

Downloaded from www.Manualslib.com manuals search engine

2-ELEVEN.E - ENGINE

The 1.8 litre 2ZZ-GE engine with VVTL-i (Variable Valve Timing and Lift - intelligent) as used in other Elise/Exige models, is fitted with a low pressure Roots type Magnuson MP62 supercharger to provide up to 0.5 bar (7 psi) of boost pressure. The supercharger is mounted on the left hand side of the block and driven by a lengthened version of the multirib auxiliary belt. The unit is self contained and features helix twisted rotors to minimise output pressure variations, and maintenance free gearing and bearings, requiring no externally sourced lubrication. An integral by pass valve under ECU control, operates to recirculate air from the compressor outlet back to the inlet under conditions of idle and part throttle to the benefit of economy and quiet operation.

The supercharger is hung off the new intake manifold by two bolts in conjunction with eccentric sleeves in order to ensure stress free alignment. An alloy bracket supports the nose of the unit to the RH engine mounting plinth, and a tubular strut braces the intake end of the unit to the clutch slave cylinder mounting point.

Air is drawn from an enlarged air cleaner through the throttle body and adaptor and into the supercharger axial intake port. From the outlet port on the compressor top surface, the air is directed through a stainless steel duct to the LH end of an air/air chargecooler mounted behind the engine, where airflow gathered from an intake duct in each of the body sides aft of the cockpit, is directed by convoluted ducting to a chargecooler shroud and through the radiator finning to cool the compressed intake charge. The cooled air exiting from the RH end of the chargecooler flows via another stainless duct into a cast alloy intake plenum/manifold. The whole intake tract uses large diameter ducting and generously radiused bends to optimise airflow and intake efficiency and minimise any potential throttle lag. A charge air temperature sensor is mounted in the outlet tank of the chargecooler.

Each end of the chargecooler is mounted by two alloy spacers to a fabricated steel mounting bracket secured to the engine crankcase by a single fixing bolt. A bonded rubber bush at this position supresses vibration effects, and in conjunction with the rubber hose connections to the inlet and outlet ducts, provides an isolated mounting of the chargecooler.

A re-shaped breather pipe is used to connect the crankcase breather spigot to the cam cover and circumnavigate the supercharger.

Road going cars use the standard catalytic converter, which is substituted by a plain pipe on track cars, but all versions are fitted with a unique exhaust muffler, featuring a double pass design, with single RH tailpipe exiting through the rear transom panel.

Four special high-flow port fuel injectors are used (common with Cup cars and USA Exige S) in conjuction with unique engine programming, which incorporates control of the supercharger by-pass valve. The boost characteristics have allowed the switching point from low to high lift cam profile to be varied between 4,500 and 6,200 rpm dependent on engine load (at normal running temperature). Twin front mounted oil/air coolers are fitted one each side, ahead of the front wheels.

Accusump

To provide protection against the possibility of oil starvation caused by the extreme g-forces possible with track use on slick tyres, the 2-Eleven is fitted with an Accusump oil storage system.

A 2-litre Accusump reservoir is mounted behind the engine on the left hand side of the rear subframe, and is plumbed into the LH oil cooler return hose at the front of the engine bay. The device comprises an alloy cylinder divided by a sliding piston, one side of which is connected to the engine oil supply, with the other containing pressurised air. With the engine running, the cylinder is charged with oil provided by the engine oil pump, but if the pressure should drop for a short period due to oil pump pick up pipe exposure during extreme braking or cornering events, the accumulator air pressure forces the stored oil into the engine lubrication system to maintain continuity of oil supply until normal conditions are resumed.

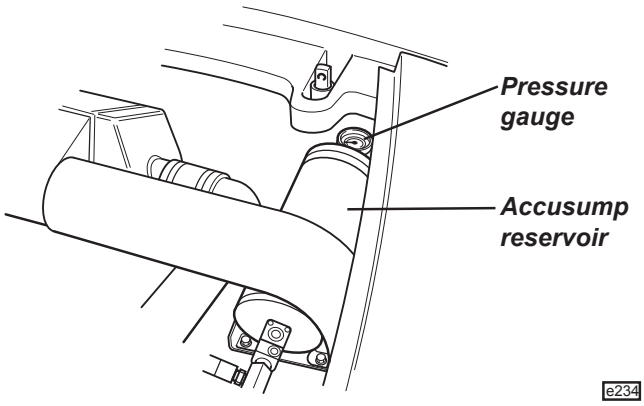

Downloaded from www.Manualslib.com manuals search engine

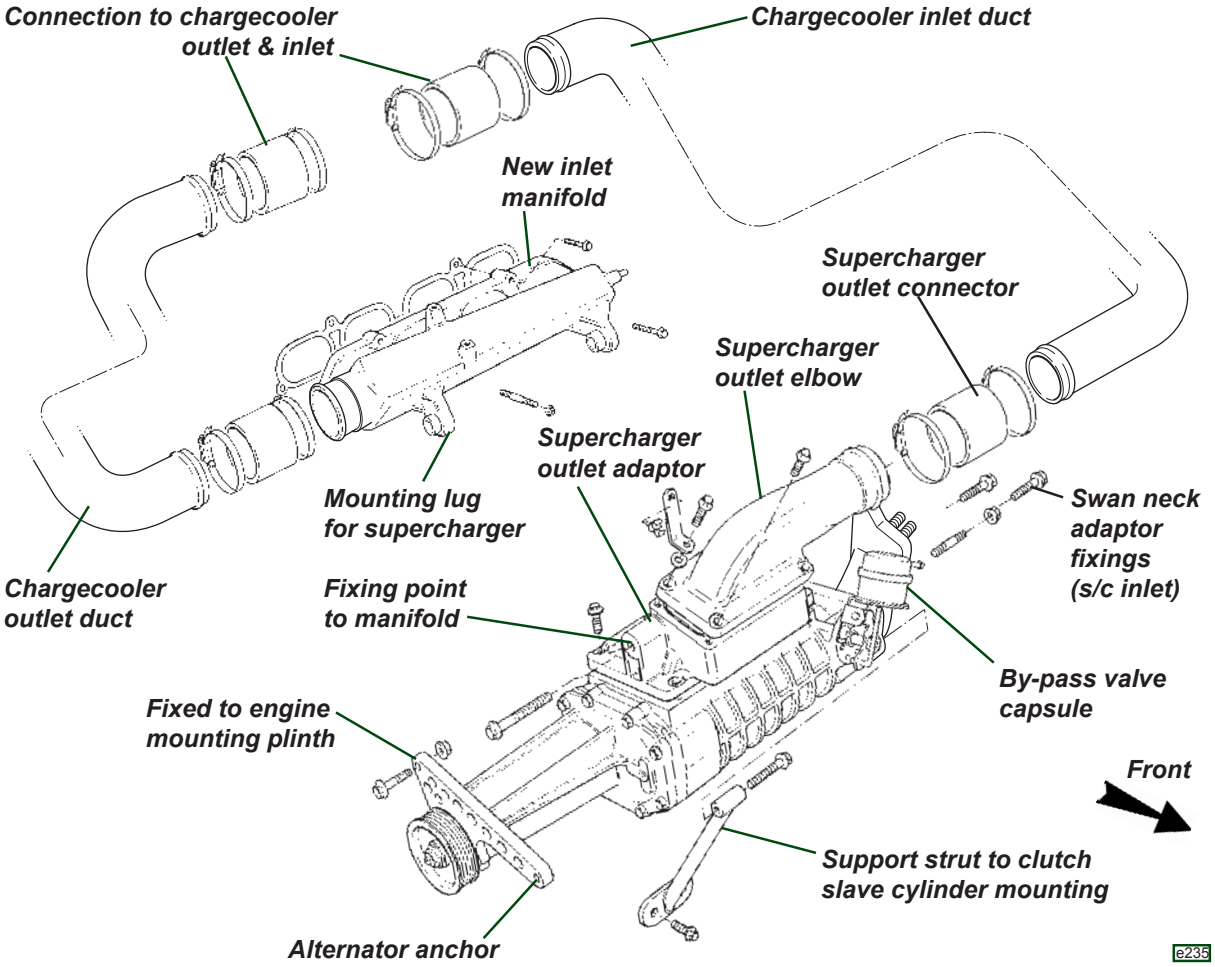

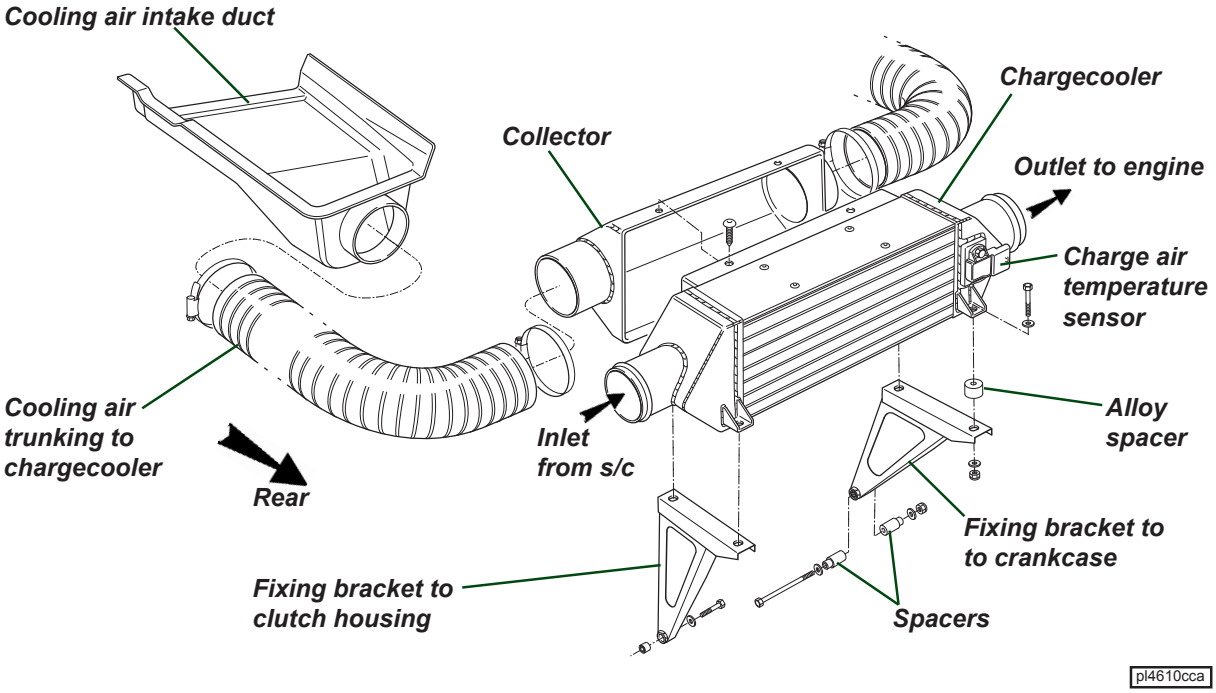

Downloaded from www.Manualslib.com manuals search engine

A one-way valve at the oil cooler connection of the 'T'- piece ensures that the oil discharged from the Accusump is directed into the oil pump and not the cooler. An Electric Pressure Control (EPC) valve fitted at the connection to the Accusump cylinder, allows cylinder charging when oil pressure is above 35 - 40 psi, and cylinder discharging at engine oil pressures below 35 - 40 psi. The EPC is also linked to the ignition switch such that with the ignition switched on the valve is open to allow oil flow, and with ignition off the valve is closed to retain oil within the reservoir.

Normal Operation

When the ignition is turned on, the EPC valve on the Accusump is opened, allowing the pressurised oil stored in the reservoir to flow out into the engine and prime the oil galleries and bearings ready for start up. When the reservoir has been emptied, the pressure gauge on the end of the reservoir will indicate the pre-charge pressure which should be 7 - 15 psi.

When the engine is started, engine oil pressure will force the reservoir piston back, such that the reservoir air pressure gauge will indicate engine oil pressure, with the quantity of stored oil dependent on this pressure at any one time. With cold oil, 80 psi may be seen, but idling at normal running temperature should produce around 30 - 40 psi. Note that the pressure reading on the reservoir gauge is damped and will lag behind the actual instantaneous pressure. A pressure relief valve in the end of the reservoir protects the equipment from over-pressure damage. If oil is seen to escape from this valve, a fault in the lubrication system is indicated, or excessive rpm have been used with cold oil.

When the engine is stopped, the EPC valve closes and a quantity of oil pertaining to the oil pressure at that time, will be retained in the Accusump ready for re-starting.

Routine Checks

Be aware that the indicated oil level on the dipstick will depend on the amount of oil stored in the Accusump, which itself is dependent on the both the Accusump pre-charge air pressure and the engine oil pressure when the ignition was switched off.

Before checking the oil level, the Accusump pre-charge pressure should first be checked; turn on the ignition to open the EPC valve and allow the stored oil to be discharged from the Accusump. The pressure gauge reading will drop during this discharge, but should then register 7 - 15 psi representing the pre-charge. If necessary, adjust the air pressure using tyre inflator equipment on the Schraeder valve adjacent to the gauge and set to 15 psi. Allow adequate time for the gauge reading to stabilise.

The oil level should now be above the top mark on the dipstick. To check for correct oil level, the engine should be started to charge the Accusump, and run to normal operating temperature until the Accusump pressure gauge registers 40 psi. If the engine is already hot, idle oil pressure may not be sufficient to open the Accusump valve, and the pressure gauge will continue to show 15 psi pre-charge. Increase engine rpm to open the valve. With the gauge showing 40 psi, turn off the engine. The EPC valve will then close and trap the normal hot idle quantity of oil in the Accusump cylinder.

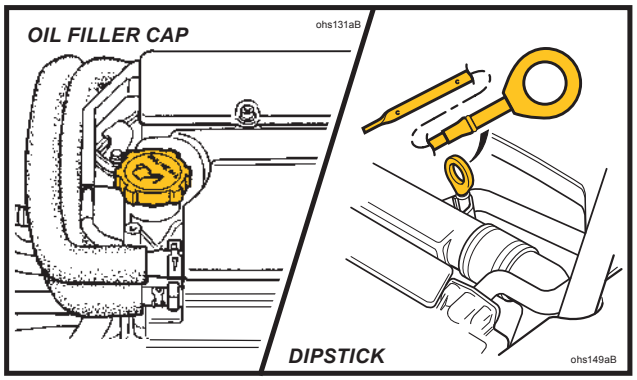

After a suitable oil drainback pause, the sump oil level may then be inspected on the disptick, and the level corrected to the top mark. It is important to maintain oil at this level to accommodate the oil transfer into the Accusump at pressures greater than 40 psi. Be aware that checking the oil level under any conditions other than 15 psi pre-charge and 40 psi oil pressure will produce inconsistent results.

Oil Changing

Before draining the sump, the ignition should first be switched on to open the EPC valve and allow the Accusump to discharge the stored oil into the sump. Check that a pressure of 7 - 15 psi remains in the Accusump at the end of this process, and if necessary top up the pressure using tyre inflating equipment on the Schraeder valve next to the gauge and set to 15 psi.

Downloaded from www.Manualslib.com manuals search engine

The oil can then be drained in the usual way, with the quantity contained in the oil cooler lines disregarded for the purposes of routine maintenance. If an engine failure has occurred, with possible debris contamination of oil hoses and coolers, it is recommended to replace both oil coolers, and to replace or thoroughly flush the feed and return hoses. At each service interval the in-line filter gauze in the hose between the Accusump and 'T'- piece, and located in the RH rear wheelarch, should be renewed.

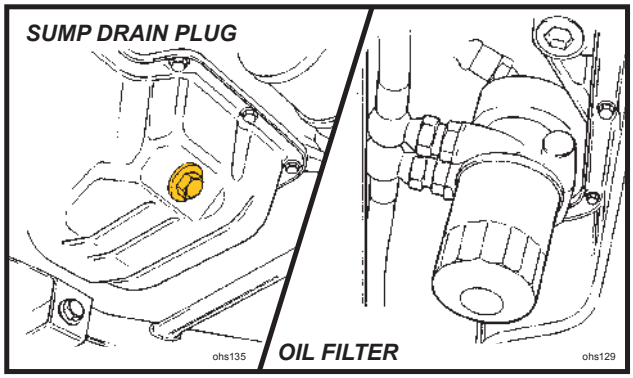

After renewing and pre-filling the engine oil filter, refill the sump to about 10mm above the top mark on the dipstick. Start the engine and allow to idle. Do NOT rev the engine or drive the car. The Accusump will take up to 2 litres of oil from the sump to store within the cylinder. Continue to idle the engine until the Accusump pressure gauge drops to 40 psi (as the oil warms) and then switch off the engine. Top up the oil to the top mark on the dipstick.

Supercharger Remove/Refit

To remove:

1. Remove the chargecooler inlet and outlet ducting.

2. Remove the throttle body and vacuum/breather hose plumbing.

3. Using a 6-point socket, relieve auxiliary belt tension and remove the auxiliary belt. Remove the alternator top mounting bolt, slacken the lower, and swing down the alternator. Release the dipstick tube from the supercharger.

4. Using a strap wrench, remove the supercharger pulley retaining nut, and slide off the pulley.

5. Remove the support strut between the throttle body adaptor and the clutch slave cylinder. Slacken the pinch bolt securing the supercharger to the nose bracket. Remove the two bolts supporting the supercharger to the inlet manifold and withdraw the supercharger.

To refit:

1. With the supercharger nose bracket bolted to the engine mounting plinth, fit the upper fixing on the alternator to the nose bracket outer end (with 13.5mm spacer). This defines the position of the nose bracket. Tighten bracket to engine mounting plinth to 50 Nm. Remove alternator top bolt and swing down to allow supercharger to be fitted.

2. Prepare supercharger: Clean mating faces of supercharger and outlet adaptor using Betaclean 3900. Fit 'O' ring into groove in outlet adaptor and fit to supercharger using 6 off M8 x 25 setscrews with Permabond A130. On the fixing located inside the adaptor, Permabond should be applied over the entire thread length. Orientate the adaptor with the outlet towards the rear of the car when fitted. Torque tighten all fixings to 25 Nm.
   Clean mating faces of outlet adaptor and outlet elbow using Betaclean 3900. Fit 'O' ring into groove in outlet adaptor face. Fit outlet elbow to point to LH side of car using 4 off M8 x 25 setscrews with a pipe clip bracket secured by both rearmost fixings. Tighten to 25 Nm.

Downloaded from www.Manualslib.com manuals search engine

3. Fit M8 stud B111E6081S into RH top (as viewed on face) fixing position in supercharger inlet flange. Clean mating face on supercharger and inlet adaptor using Betaclean 3900. Fit 'O' ring into groove in adaptor face and fit adaptor to supercharger using 2 off M8 x 30 flange head bolts in top positions and M8 flange nut on stud - all 25 Nm. Disregard 4th position at this stage.

4. Mount supercharger: With the pulley removed from the supercharger, slide the nose into the nose bracket until hard against the machined step. Support to the inlet manifold sliding bushes using M10 x 50 flange head bolts and Permabond A130, but do not tighten. Tighten the nose bracket socket head pinch bolt to 25 Nm.

5. Loosley fit the supercharger support strut between the inlet adaptor (M8 x 55 bolt with A130) and the clutch slave cylinder fixings (M8 x 25 with A130). Tighten the three support strut bolts to 25 Nm. Carefully tighten the two M10 x 50 flange head bolts to pull in the two spacers evenly to clamp against the supercharger.

6. Refit the alternator upper bolt and spacer and tighten to 25 Nm. Tighten the lower bolt to 25 Nm.

7. Fit the pulley to the supercharger with the longer boss towards the 'charger. Fit the nut onto the shaft, and use a strap wrench to hold the pulley whilst the nut is tightened to 61 Nm.

8. Use a 6-point socket on the tensioner arm to allow fitment of the multirib accessory drive belt around the pulleys as shown, ensuring that the belt is correctly seated in all the ribbed pulleys.

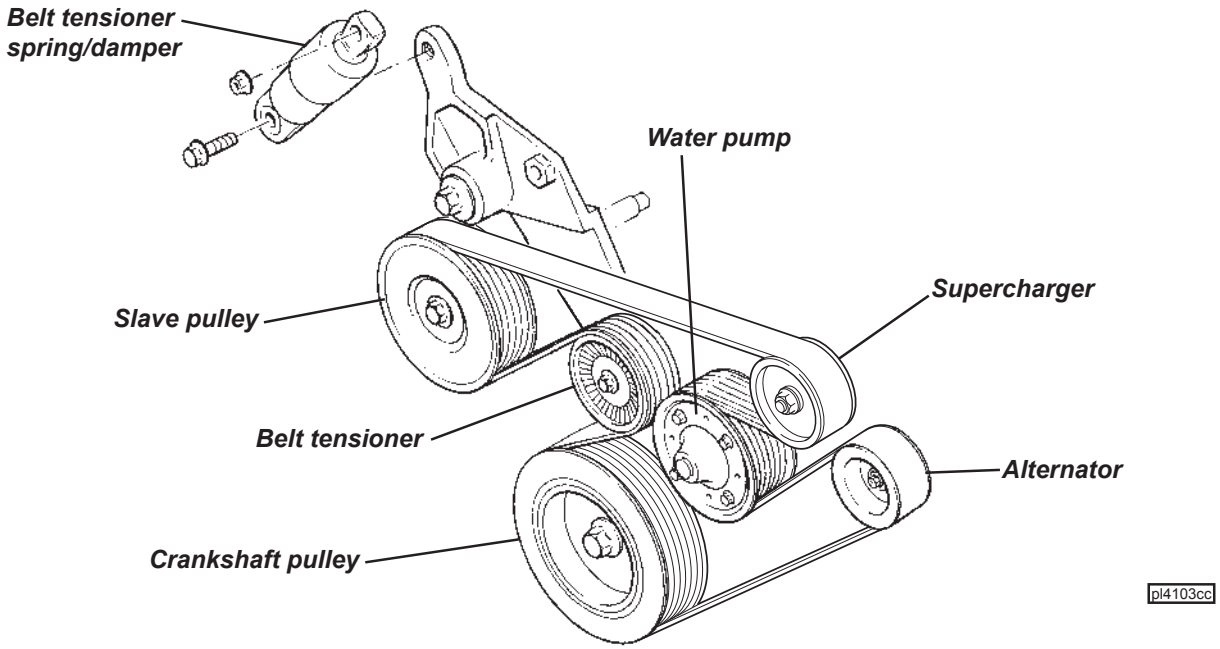

9. Refit other components in reverse order to removal.

Note areas of change compared with standard models;
Engine dipstick tube altered to avoid supercharger.
Crankcase breather pipe altered to avoid supercharger.
Relays on engine bulkhead move to avoid supercharger by-pass capsule

Downloaded from www.Manualslib.com manuals search engine

Supercharger Nose Assembly

If the supercharger input shaft oil seal should be damaged or found to leak, the complete nose assembly including the nose housing, shaft, bearings and seals should be replaced as a unit by the following procedure:

Parts Required

Supercharger Nose Assembly	A128E6020S	1 off
Oil Fill Kit	A128E6014S	1 off

1. Remove the complete supercharger assembly from the engine (see above).

2. Use a strap wrench to hold the pulley, and remove the pulley nut. Use a three leg puller to withdraw the pulley from the shaft. Apply forces only to the pulley and shaft end. Other techniques may damage the housing or internal components.

3. Provision for collecting the contained oil before removing the 8 bolts securing the nose housing to the main supercharger body. To separate the nose from the body, expanding jaw pliers should be used in the recesses provided around the flange. Do not pry between the mating faces, or damage will be caused and oil leaks result. Drain all the old lubricant from the gearcase and discard appropriately.

4. Stand the supercharger body on end with the gearcase uppermost. Discard the old synthetic drive coupling, and fit the new part supplied in the oil fill kit onto the three pegs on the rotor drive gear. Check that the two alignment dowels are fitted in the supercharger body flange.

5. Fill the gear case with 120 ml of Magnuson Products Supercharger oil as supplied in the oil fill kit.

6. Clean the mating face on the supercharger body and on the new nose housing, and apply a bead of Loctite Eliminator Sealant, supplied in the oil fill kit, around the whole of the joint face on the nose housing, looping around each of the fixing holes.

7. Before attempting to fit the nose housing, first align the three pins on the input shaft with the vacant holes in the drive coupling. Place the nose housing into postition, and ensure that the two alignment dowels engage with their corresponding holes. It may be necessary for the casing bolts to be used to pull the two housings together.

8. If re-using the casing joint bolts, the threads should be thoroughly cleaned before applying Loctite 242 or equivalent medium strength threadlocking compound. New casing bolts are pre-treated. Fit the eight bolts and tighten progressively to pull the joint evenly together. Finally torque tighten to 27 Nm in the pattern shown.

Tightening sequence

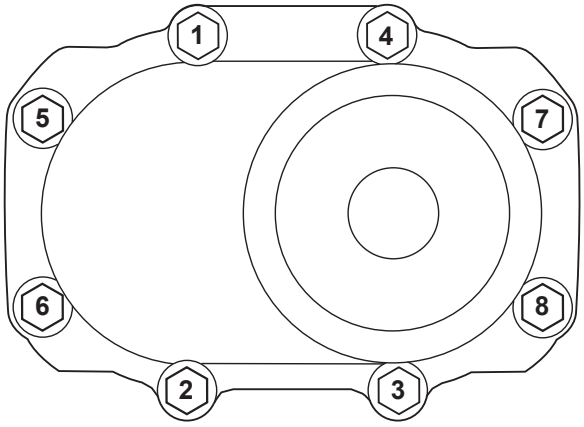

e233

9. Fit and secure the oil service plug, and position mark. Refit the supercharger.

Downloaded from www.Manualslib.com manuals search engine

2-ELEVEN.F - TRANSMISSION

Clutch

The 2-Eleven is fitted with an uprated clutch cover assembly rated for a maximum torque of 362 Nm, and which enjoys a mass reduction of 0.6 Kg over the regular cover. Also fitted is an uprated friction plate which uses 4 steel compression springs in the cush drive hub, in place of the regular item's 4 rubber blocks.

Differential

The 2-Eleven is fitted as standard with an 'open' bevel gear differential, supplemented by switchable Lotus Traction Control (LTC), with an option package of variable LTC with Launch Control. For full details of these electronic systems, refer to Section 2-Eleven.M

Two types of optional Limited Slip Differential (LSD) are also available.

Torsen Type: A Torsen (TORque SENsing) gear type LSD limits the speed differential between the two rear wheels by mechanically distributing the applied torque in accordance with the available grip at each tyre. The LSD uses worm wheels to interconnect the two output shafts and uses the poor torque reversal efficiency of this type of gearing to ensure that both wheels are always supplied with driving torque. This feature can enhance vehicle performance in some competition events, and help maintain mobility in some types of soft ground condition.

Apart from the taper roller bearings supporting the differential in the transmission case, the LSD is not serviceable. For details of bearing preload adjustment, refer to Service Notes sub-section FJ.6. There is no special oil requirement for the Torsen LSD. All factory supplied transmission assemblies originally built with Torsen LSD are identified on the bar code label applied to the top surface of the transmission case; The 3rd character of the 7 digit code is 'O' for open differential, and 'L' for limited slip.

Plate Type: A competition type friction plate LSD made by TRD is available in both '2 way' and '1.5 way' variants. This type of LSD uses a pack of friction clutch plates between each differential output gear and the differential carrier. The load applied to the clutch pack is proportional to the input torque via a cam and ramp angle design incorportated between the 4-pinion spider (driven by the crownwheel) and the two clutch pack assemblies. The 'stiffness' of the LSD operation is dependent on the ramp angle which may be specified on ordering. A '2 way' LSD uses the same ramp angles for drive and overrun to provide similar slip control in both conditions. A '1.5 way' LSD uses different ramp angles for drive and overrun to reduce the clutch pack load on braking. There is no special oil requirement for the plate type LSD, but to maintain design performance, inspection and cleaning of the plates should be carried out every 15,000 miles (25,000 km) by a competent agent.

2-ELEVEN.G - WHEELS & TYRES

Optional on the 2-Eleven are 240R type lightweight forged alloy 5-spoke roadwheels, which at 7x16 and 8x17, are ½ inch wider, front and rear, than the standard Exige wheels, but retain the standard insets of + 31.3 mm and + 38.0 mm. The wheels are finished in either Satin Black or High Power Silver, with 'Lotus Sport' moulded into one of the spokes of each wheel. The Lotus specific, regular Exige Yokohama A048 tyres, identified by 'LTS', are fitted as standard. Each wheel is retained by four standard Elise/Exige spline head 60 degree taper seat bolts, for which a splined adaptor tool is stowed in the vertical tube of one of the roll-over bar backstays. No security coded wheel bolts are used.

Note that these forged alloy wheels incorporate a steel centralising sleeve to locate onto the hub spigot, and is normally retained in the wheel. A smear of copper grease on the spigot will help prevent corrosion between the hub and sleeve causing the insert to become separated from the wheel.

2-ELEVEN.J - BRAKES

The anti-lock braking system is uprated in the following respects:

- Motorsport brake pads (Pagid RS14) are fitted front and rear together with cross-drilled brake discs;
- Steel braided brake hoses fitted all round;
- Optional Castrol 'SRF' synthetic racing brake fluid. Over 500°F boiling point. Dot 4.
- Brake callipers painted yellow.

Downloaded from www.Manualslib.com manuals search engine

Access to the brake master cylinder reservoir is available via a small panel in the driver's side front body; release the screw fastener using the tool provided in the roll over bar backstay, and withdraw the panel. To refit, engage the tongue beneath the front end of the aperture, and secure the rear end with the fastener. Note that to avoid erroneous low fluid tell tale activation under extreme track use, it may be necessary to fill the fluid reservoir to the base of the neck.

Option

An optional brake upgrade comprises larger front discs (308mm vs. 288mm) mounted on alloy centres and clasped by A.P. Racing 4- pot callipers.

Brake Pad Bedding

If new brake pads and/or discs are to be fitted, a bedding-in procedure should be followed:

WARNING; This procedure should be carried out only on a closed track, paying appropriate regard to any other track users. Do not attempt on the public highway.

The purpose of brake pad bedding is to:

- Transfer a layer of friction material onto the disc faces to achieve maximum performance;
- Stabilise compressible materials to avoid a spongy pedal;
- Boil off volatile elements in the friction compound;
- Align the pad and brake disc surfaces for full contact.

If the pads are not bedded in correctly, or are used aggressively straight after fitting, pad glazing may occur. This condition results from resins in the pad material crystallising on both the pad friction surface and the brake disc surface, producing brake judder and vibration. Also, rapidly escaping volatile elements and moisture from the resin, in seeking an immediate escape route out of the friction compound, can create small fissures that can lead to cracking and chunking of the material.

Bedding Procedure;

- To generate some heat in the discs and pads, perform 4 to 6 stops with medium brake pressure from around 70 mph (110 km/h) to 40 mph (60 km/h), allowing around 30 seconds between stops. The pad temperature should not exceed 400 degrees C.
- Immediately after this procedure, carry out one high speed stop with medium to heavy brake pressure, without activating the ABS, from around 80 mph (130 km/h) to 40 mph (60 km/h).
- Perform 3 or 4 recovery stops to clean the discs and pads, using light pedal pressure from around 70 mph (110 km/h) to 40 mph (60 km/h).
- Repeat the high speed stops, including the recovery stops, a further 2 or 3 times. The brakes may now be considered fully bedded.

New Pads on Used Discs

If new brake pads are to be fitted on used discs, it is recommened to chamfer the edges of the pad to allow optimum bedding.

Parking Brake

Immediately after track use or hard brake usage when the discs are still hot, if possible, avoid using the parking brake (chock wheels) to prevent heat transfer into the pads and brake fluild.

2-ELEVEN.K - COOLING

The 2-Eleven uses the standard horizontally mounted radiator, with twin cooling fans on its underside. The fans are switched individually by the engine ECM in conjunction with a fan control module mounted in the chassis front well, behind the radiator. One fan is switched on at 98°C on rise, off at 93°C on fall, with the second fan motor run in parallel, and switched on at 103°C on rise, off at 98°C on fall.

Twin front mounted oil/air coolers (std. Exige hot climate spec.) are fitted, one ahead of each front wheel. An engine intake air chargecooler radiator is rubber mounted behind the engine, with cooling airflow gathered by body apertures alongside the rear of the cabin, and fed via convoluted ducting to a collector on the forward side of the chargecooler. Air exhausting from the chargecooler radiator escapes via a rear transom aperture.

Downloaded from www.Manualslib.com manuals search engine

Engine Bay Ventilation

The body of the 2-Eleven incorporates four air intake ducts;

- Grilled air intakes at each side of the front scuttle, feed air via ducting formed within the body sides to the engine bay; the left hand duct feeds a cool air supply with a small 'ram'effect to the engine air cleaner; the right hand duct feeds cooling air to the front of the engine bay.
- Two grilled air intakes at the rear of the cockpit sides supply a plenum on the front of the chargecooler radiator.
  Hot air exhausts from the engine bay via an aperture in the rear body.

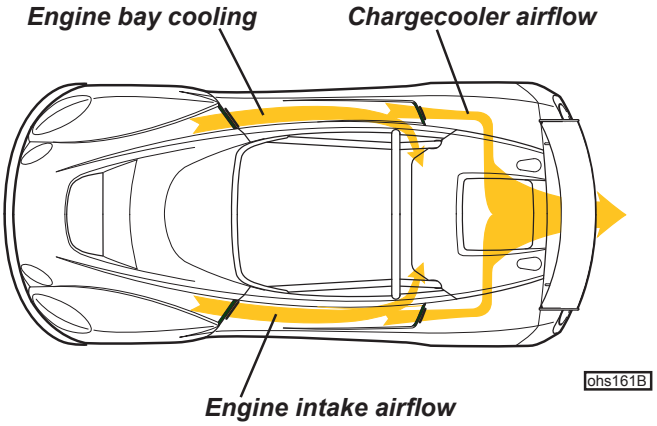

2-ELEVEN.L - FUEL SYSTEM

In order to meet the fuelling requirements of the 255 PS engine specification, a high output fuel pump is fitted in the otherwise unchanged tank. This pump is slightly longer than the standard item and requires a new alloy cap (replaces original plastic cap) to retain the pump in the plastic housing inside the tank.

Downloaded from www.Manualslib.com manuals search engine

2-ELEVEN.M - ELECTRICAL

The 2-Eleven is available with three levels of lighting equipment:

- Track; with no lighting equipment.
- Race; with rear turn lamps, brake lamps and rear fog lamps.
- Road; with full lighting set, but no CHMSL.

Lighting Switches (if fitted)

Principal lighting functions are controlled by a row of three push button switches mounted in a nacelle below the scuttle top edge; for the rear fog switch (if fitted) see later. Each switch is pressed once to switch on, and pressed a second time to switch off. A symbol accompanies each switch to indicate its function.

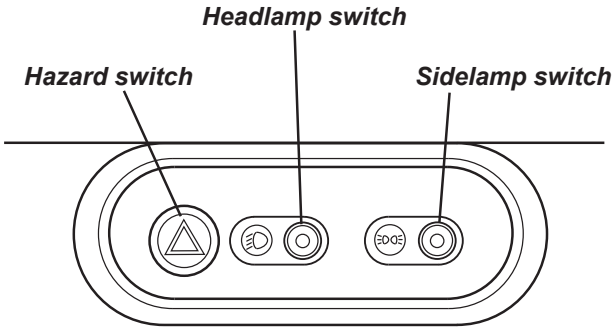

RHD shown

ohs163B

Sidelamp Switch

Positioned in the right hand end of the panel, this switch functions with or without the ignition, and switches on the sidelamps and instrument/switch illumination. A tell tale in the switch button lights up green to indicate when the circuit is active.

Press the switch a second time to switch off the sidelamps, but note that the headlamps must first be off (see below).

Headlamp Switch

Centremost of the three switches, that for the headlamps functions with or without ignition, and switches on the headlamps together with the sidelamps and instrument/switch illumination. A tell tale in the switch button lights up green to indicate when the circuit is active. The steering column lever switch (see later) is used to select main or dip beam.

Pressing the switch a second time will switch off the headlamps, but leave on the sidelamps (see above).

Hazard Warning Lamps Switch

The hazard warning switch is located at the left hand end of the panel and has an icon in the switch button which is back lit when the ignition is switched on. The switch is operative at all times, and when pressed, causes all the turn indicator lamps to flash in unison. The turn lamps tell tale and the hazard switch icon will also flash. Press a second time to switch off.

This facility should be used when the car is stopped on the highway in circumstances where a warning to other traffic would be judicious. Use of the hazard warning lamps may be subject to local traffic laws, with which drivers should familiarise themselves.

Instrument Illumination

A small button is provided on the steering column shroud ahead of the ignition switch, by which the brightness of the electroluminescent instrument illumination may be adjusted. To cycle through the range of brightness, first switch on the lights, and then press and hold the button before releasing at the desired setting.

Note that this dual function button also resets the trip distance recorder if pressed only briefly.

Downloaded from www.Manualslib.com manuals search engine

SIDE PANEL SWITCHES

Situated at the end of the fascia, outboard of the steering column is a switch panel providing various functions dependent on vehicle specification.

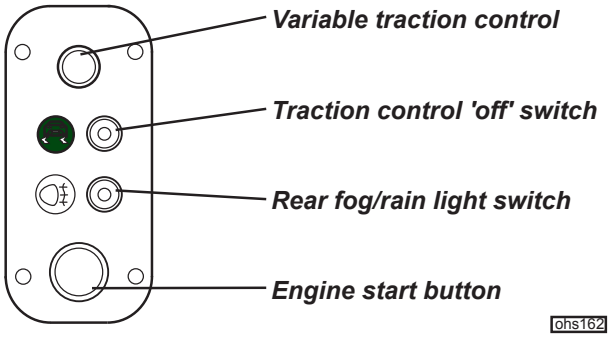

Engine Start Button

Fitted on all cars, at the bottom of this panel is a red button to activate the engine starter motor. This circuit is operative only when the ignition is switched on. Care should be taken not to press the button when the engine is running, as damage to the starter mechanism is likely to be caused.

For correct operation of this function see 'Starting Procedure'.

Rear Fog/Rain Light Switch (if fitted)

On cars fitted with full road lighting, the switch above the starter button controls the two rear fog lamps, which operate only in conjunction with the ignition and headlamps. Tell tales in the switch button and instrument pack light up amber to indicate when the circuit is active. Press a second time to switch off the lamps.

Note that whenever the headlamps and/or ignition are switched off, the fog lamps will also switch off. On re-instatement of ignition and headlamps, the fog lamps will remain off until requested again by pressing the switch.

For track cars fitted with rear warning 'rain' lamps, these may be activated any time the ignition is on, by pressing this button. Tell tales in the switch button and instrument pack light up amber to indicate when the circuit is active. Press a second time to switch off the rain lamps.

Lotus Traction Control

All cars are equipped with Lotus Traction Control (LTC), whether or not the optional Limited Slip Differential (LSD) is specified.

Lotus Traction Control (LTC) is a software programme within the engine electronic control unit (ECU) which uses inputs from the wheel speed sensors to determine the degree of wheelspin occurring, and when necessary, modulate fuel injector delivery to control engine power output until grip is restored. This feature, which operates at all speeds above 6 mph, can improve vehicle stability in some extreme conditions of use, especially where variable surface grip prevails, or when maximum vehicle performance is being exploited.

The optional Torsen type Limited Slip Differential (LSD) is a mechanical gear system incorporated into the final drive unit, and limits the speed differential between the two rear wheels by distributing the applied torque in accordance with the available grip at each tyre. This feature can enhance vehicle performance in certain types of off-road or closed venue competition, and help maintain mobility in mud, snow or sand. LTC then acts electronically to stabilise high speed vehicle behaviour under high cornering loads or extreme manoeuvres.

If the LTC tell tale in the instrument panel is seen to flicker, this is an indication that the tractive limit has been reached, and traction control activated.

Lotus Traction Control 'Off' Button:

In certain circumstances, such as loose or soft surfaces, it may be desirable temporarily to switch off the traction control, for which purpose an LTC 'off' button is provided on the switch panel outboard of the steering column. To switch off the LTC; with the ignition switched on, hold the button pressed for 2 seconds. The button tell tale together with the instrument panel tell tale will light up amber to confirm system de-activation.

WARNING:

- **LTC should always be active when driving on the public highway.**
- **If the system is switched off when driving off-highway, be aware of the consequent change in vehicle behaviour and modify driving style accordingly.**

To re-activate LTC, press (momentarily) the button a second time and check that the button and instrument panel tell tales go out. Note that the button tell tale will flicker in conjunction with the instrument panel tell tale if traction control is triggered. Irrespective of the system status at the time of ignition switch off, LTC will default to 'on' next time the ignition is switched on.

Downloaded from www.Manualslib.com manuals search engine

Variable Traction & Launch Control (if fitted)

Cars equipped with the optional variable traction and lauch control, have a rotary control knob mounted above the LTC 'off' button on the switch panel.

Variable Traction Control

Each time the ignition is turned on, normal full LTC is activated. To enable variable traction control, turn on the ignition and hold the LTC 'off' button pressed for 2 seconds. Do not touch the throttle pedal. Check that the tell tale in the switch button is lit. Start the engine. Note that if the ignition is switched off (e.g. prior to a second start attempt), the above procedure must be repeated in sequence.

With the switch button tell tale lit and the engine running, the rotary knob may then be used to select the degree of traction control desired:

- For maximum traction control (0% slip) turn the knob fully counterclockwise.
- To reduce traction control (to allow up to 12% slip), turn the knob progressively clockwise.
- Fully clockwise, traction control is disabled, as indicated by the lighting of the instrument panel tell tale.

Variable Launch Control

This feature allows the engine rpm to be limited during a competition start in order to balance engine power against available grip and provide a controlled degree of wheelspin for the first moment of acceleration, until superseded by the traction control system at around 6 mph.

To enable this feature, turn on the ignition and hold the LTC 'off' button pressed for 2 seconds. Check that the tell tale in the switch button is lit. Then;

- With ignition on, engine **stopped**, fully depress the throttle pedal for 5 seconds.
- Tacho will now show launch rpm. Turn the rotary knob as necessary to select any desired launch rpm between 2000 and 8000.
- Release throttle and start engine.
- Turn the rotary knob to select the desired level of traction control (see above), noting that the launch control setting will not be affected.
- Engage first gear, apply full throttle (ECU limits engine speed to selected launch rpm), and rapidly 'drop' clutch.
- Maintain full throttle throughout the transition from launch to traction control (at around 6 mph) until the first gear change is required.
- To disable launch control when variable traction control is still required, reset launch rpm to 8,000.

NOTE

- Do not attempt to slip the clutch during this process, as overheating or damage to the clutch mechanism may occur. An instant clutch engagement is required to 'break' rear tyre traction and initiate wheelspin.
- Do not attempt LC starts in any gear other than first.
- Do not hold the engine at or near maximum rpm for more than a few seconds.
- Under no circumstances should this track feature be employed on the public road.
- **Use of Launch Control is an ultimate technique designed to produce the fastest possible race start. Always allow the clutch to cool and recover before repeating a launch controlled start. The extreme loads associated with such starts will result in reduced transmission component life cycles.**
- At the next key-on, the system will default to full LTC and Launch Control off. Turning on the ignition and holding the LTC 'off' button pressed for 2 seconds will restore the previous traction and launch settings.

Adjustment Tips

Note that the optimum settings for variable traction and launch control will differ for each set of track surface, tyre and ambient conditions. A suggested adjustment logic follows:

- Set the traction control to a mid position.
- Start with a low launch rpm e.g. 4,000 rpm.
- Trial launch and assess initial wheelspin control and transition into traction control.
- If launch control is set too low, the engine may 'bog down' and fall out of the power band. If set too high, too much initial wheelspin may result, with poor step off from the line.
- Similar logic applies to traction control adjustment when this system takes over above about 6 mph.

Downloaded from www.Manualslib.com manuals search engine

Battery Access

The lightweight 'Odyssey' battery uses absorbed glass mat, dry cell technology to provide high electrical performance with minimum weight and size. The battery is located centrally in the cabin rear bulkhead, protected by a composite cover. No routine inspection or topping up of the electrolyte is required, but at every service interval, the battery terminals should be checked for security and condition, and protected with petroleum jelly.

For access to the terminals, the bulkhead cover must first be removed. Use the 3mm hexagonal key to remove the four fixings securing the battery cover to the chassis and bulkhead, and disconnect the auxiliary power socket lead (if applicable).

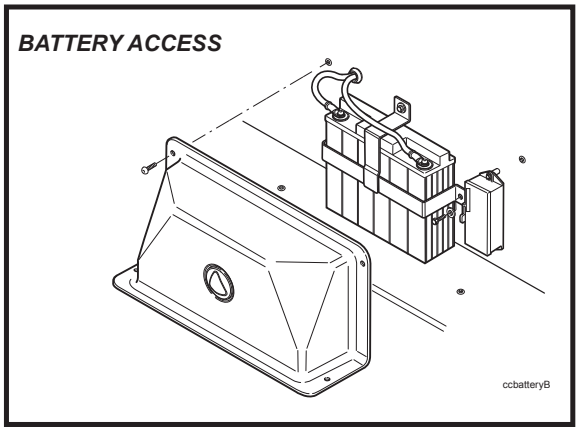

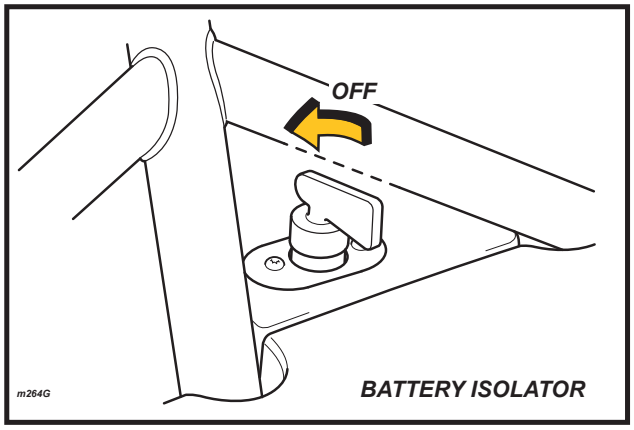

Battery Isolator Switch

A battery master switch is mounted on the left hand side of the rear scuttle, and is provided as a safety feature to allow a third party, from outside the vehicle, to turn off the engine and islolate all battery power.

This facility should be used only when necessary for safety reasons, or prior to removing the battery from the car. If possible, do not operate the swtich until at least 10 seconds after switching off the ignition, in order to allow the engine management system to adjust the setting of some components ready for re-starting, and to avoid the loss of adaptive learn memory in the ECU.

To turn off battery power, turn the red key (knurled alloy knob on road cars) a quarter turn counterclockwise until aligned fore/aft. Remove the key to prevent loss and fit the rubber cap to protect from rain ingress. To turn on, insert the key, press down and turn a quarter clockwise. The key is now captive.

Battery Charging

The Odyssey PC680 battery fitted to the 2-Eleven uses aborbed glass mat (AGM) technology to provide the virtues of both deep cycling ability and high cranking power. Thus low rate long duration drains and short duration high amperage pulses are accommodated. The battery is fully sealed, recycling all gases internally and using no external vent. There is also no electrolytic corrosion of the positive terminal, or corrosion to the surrounding area. Never attempt to remove the top decal cover, or failure of the battery will ensue.

The state of charge in the battery can be determined from the following table:

Voltmeter reading	*State of charge*
12.84 V	100%
12.50 V	75%
12.18 V	50%
11.88 V	25%

The battery does not lose its charged energy during cold storage temperatures, so there should be no need to trickle or float charge during the winter months. To store off season, measure the battery voltage to ensure it is fully charged; 12.8 volts or greater, and recharge if necessary. Turn off the battery isolator switch, or disonnect the negative battery cable to prevent any applied electrical load during storage. The battery should not freeze in temperatures down to - 40°C, so can be left in the vehicle except in the most extreme climates. The battery can be stored for 2 years or more at temperatures below 25°C.

Under conditions of normal daily use, it should not be necessary to use external battery charging equipment. If the battery becomes discharged to the extent that the car cannot be started, the recommended course of action is to fit a substitute battery whilst the original battery is trickle charged. If, in an emergency, the car has

Downloaded from www.Manualslib.com manuals search engine

to be 'jump' started, the subsequent conditions of vehicle use may not allow for sufficient alternator charging of the battery to achieve a fully charged state. The battery should be trickle charged by external means until 12.8 volts is recorded.

The battery manufacturer recommends an Odyssey EPS 8A charger, which would require around 2½ hours to re-charge a fully discharged battery. Note that a trickle charger will not be capable of re-charging a fully discharged Odyssey battery. Putting the battery into service at a less than fully charged state will reduce the time period for which the car can be parked without subsequent starting difficulties. A battery left in a fully discharged state for a prolonged period, may not be recoverable to its original condition. Allow several hours after disconnecting a charger before measuring the battery voltage.

WARNING:

- **Hydrogen gas generated by the battery could cause an explosion, resulting in severe personal injuries.**
- **Charge battery in a well ventilated area.**
- **Never charge a frozen battery. It may explode because of gas trapped in the ice. Allow a frozen battery to thaw out first.**
- **If you get electrolyte, which is an acid, in your eyes or on your skin, immediately rinse with cold water for several minutes and call a doctor.**

Auxiliary Power Socket

An auxiliary power socket is fitted in the right hand side of the battery cover. The socket is operative at all times, and is provided with a protective hinged flap.

The format of the socket allows a standard cigarette lighter element to be used, or other electrical accessories requiring this type of fitting. Maximum current draw should not exceed 15 amps.

Downloaded from www.Manualslib.com manuals search engine

Fuses

Two 4-slot fuseboxes are mounted on the rear bulkhead and control the principal engine circuits. Track cars fitted with rear lamps, use a third 4-slot fusebox, located within the battery compartment for the lighting circuits. Cars with full lighting sets replace this 4-slot box with a 22-slot fusebox within the battery compartment.

The 'Littel' type fuses are numbered and coloured according to their amperage rating, and may be removed by withdrawing from their slots.

Engine Bay Fuses

Slot	*Rate*	*Circuit*
E1	7.5A	Engine control relay
E2	15A	Cooling fan 1
E3	15A	Cooling fan 2
E4	-	Not used

Slot	*Rate*	*Circuit*
F1	15A	Batt. services
F2	15A	Ign. services
F3	20A	Fuel pump
F4	10A	Main relay

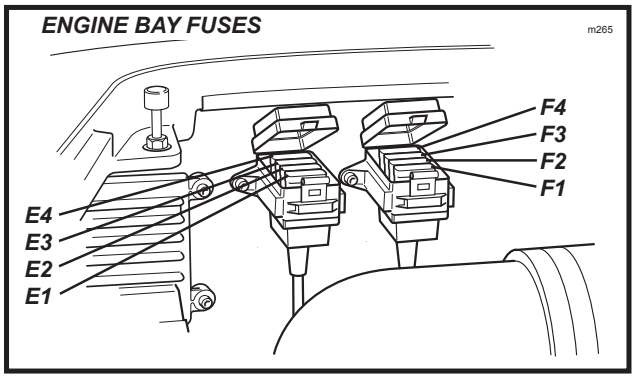

Track Lights Fusebox

Slot	*Rate*	*Circuit*
R1	5A	Turn lamps
R2	5A	Rain lamp

Slot	*Rate*	*Circuit*
R3	5A	Rvrs. lamps
R4	5A	Stop lamps

Full Lighting Set Fusebox

Slot	*Rate*	*Circuit*
A1	-	Not used
A2	-	Not used
A3	7.5A	Reverse lamps
A4	-	Not used
A5	5A	Brake lamps
A6	7.5A	Turn lamps
A7	-	Not used
A8	-	Not used
A9	10A	Hazard
A10	7.5A	Horn
A11	-	Not used
A12	20A	Aux power socket

Slot	*Rate*	*Circuit*
A13	-	Not used
A14	-	Not used
A15	15A	Switch pack & dipswitch
A16	10A	Sidelamps, rear fog
A17	10A	Dip beam LH
A18	10A	Dip beam RH
A19	-	Not used
A20	10A	Main beam LH
A21	10A	Main beam RH
A22	-	Not used

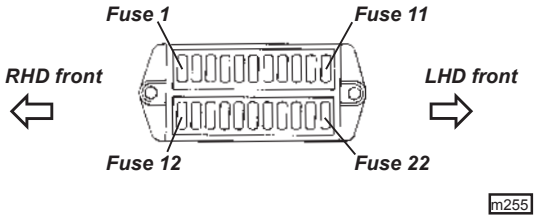

ABS Fuse: A 60A Maxi fuse protecting the ABS circuits is located within the battery box.

Fuse colours:
2A - Black;
3A - Violet;
4A - Pink;
5A - Orange;
7.5A - Brown;
10A - Red;
15A - Light Blue;
20A - Yellow;
25A - Clear.

Downloaded from www.Manualslib.com manuals search engine

2-ELEVEN.O - MAINTENANCE & LUBRICATION

A Maintenance Schedule for the 2-Eleven is available under part number LSL519, and a Pre Track Session Check List, which should be completed before each and every track driving session, under part number LSL520.

Recommended lubricants are unchanged apart from the option of Castrol SRF brake fluid. Spark plugs are part number ALS3E6015F (NGK PFR7G) with 0.8mm (- 0.1, + 0) gap.

Vehicle Recovery

No towing eye is fitted on the 2-Eleven. If the car has to be recovered by towing either forwards or backwards, a fabric towing strap should be secured to the passenger side of the roll over bar. In operation, care should be taken to prevent damage to the aeroscreen or rear aerofoil.

2-ELEVEN.Z - MISCELLANEOUS

Warranty

'Track Use' Cars

The Lotus 2-Eleven is designed and supplied into markets other than the U.K. only as a track use vehicle, as defined by character 12 of the V.I.N. being 'H' or 'J'. This specification is also available as an option in the U.K., identified in the same manner. All such cars are not eligible for European type approval, or Australian Compliance Plate Approval, or equivalent regulations in other countries. The Lotus 2-Eleven is supplied with no specific type approval paperwork or certification information and Lotus Cars will not provide any assistance to any person or company seeking to register a 2-Eleven model for road use outside of the U.K.

Lotus offers no warranty other than that required by law, on any 'track use' car in any territory.

U.K. Road Use Cars

The following Warranty applies only to cars built by Lotus for road use in the U.K., as identified by V.I.N. character 12 being 'F' or 'G', and only whilst being used in the U.K. It is permissible for the car to be driven on closed circuits or private test tracks, but using the car in a competitive manner, including timed runs or laps, will invalidate the Lotus Vehicle Warranty.

Warranty Periods

- Warranty period for vehicle; 12 months/12,000 miles.
- Warranty period for replacement parts; 12 months/12,000 miles.
- Corrosion perforation warranty; 2 years unlimited mileage.

Exclusions From Warranty Coverage

- The 2-Eleven features an open cockpit such that all issues relating to water ingress, including damage to trim and upholstery, staining or discoloration of the chassis, and damage to electrical equipment within the cabin, are not covered by this warranty; use a suitable outdoor car cover when necessary to protect against weather damage.
- Adjustments to screw fixed body panels and components, glass and trim should be considered as routine maintenance and may periodically be required, especially when subjected to high forces by repeated track use.
- Internal and external mirrors are vulnerable to damage from driver/passenger ingress/egress as well as from external strikes, and are excluded from warranty coverage.
- All composite panels on the 2-Eleven are designed for light weight consistent with aerodynamic function, and may be damaged by inappropriate application of bodyweight or other injudicious treatment. The durability and standard of the paint finish may not match that of more conventionally constructed cars. There is no body or paint warranty on the Lotus 2-Eleven.
- If the car has ever been used on road or track with 'slick' or equivalent racing tyres, warranty is void.
- Clutch and brake discs are excluded.

For full details of the 2-Eleven warranty and its restrictions and limitations, refer to the Owner's Handbook, or 2-Eleven specific Warranty Certificate LSL521

Downloaded from www.Manualslib.com manuals search engine

Circuit Diagrams

Start, Alternator & Ignition	Sheet 1	Page 28
Fuel Pump & Engine Management	Sheet 2	Page 29
Engine Management	Sheet 3	Page 30
Tail, Stop, Reverse & Fog Lamp	Sheet 4	Page 31
Turn Indicators, Side & Hazard Warning Lamps	Sheet 5	Page 32
Switch Pack & Headlamps	Sheet 6	Page 33
Instruments	Sheet 7	Page 34
Engine Cooling Fan	Sheet 8	Page 35
Horn & Rain Lamp Relay (track option)	Sheet 9	Page 36
ABS & Traction Control	Sheet 10	Page 37
Harness Ground Splices	Sheet 11	Page 38
Fuse Layout (base & SVA cars)	Sheet 12	Page 39
Power & Ground Structure	Sheet 13	Page 40
Fuse Layout (base & track cars)	Sheet 14	Page 41

Downloaded from www.Manualslib.com manuals search engine

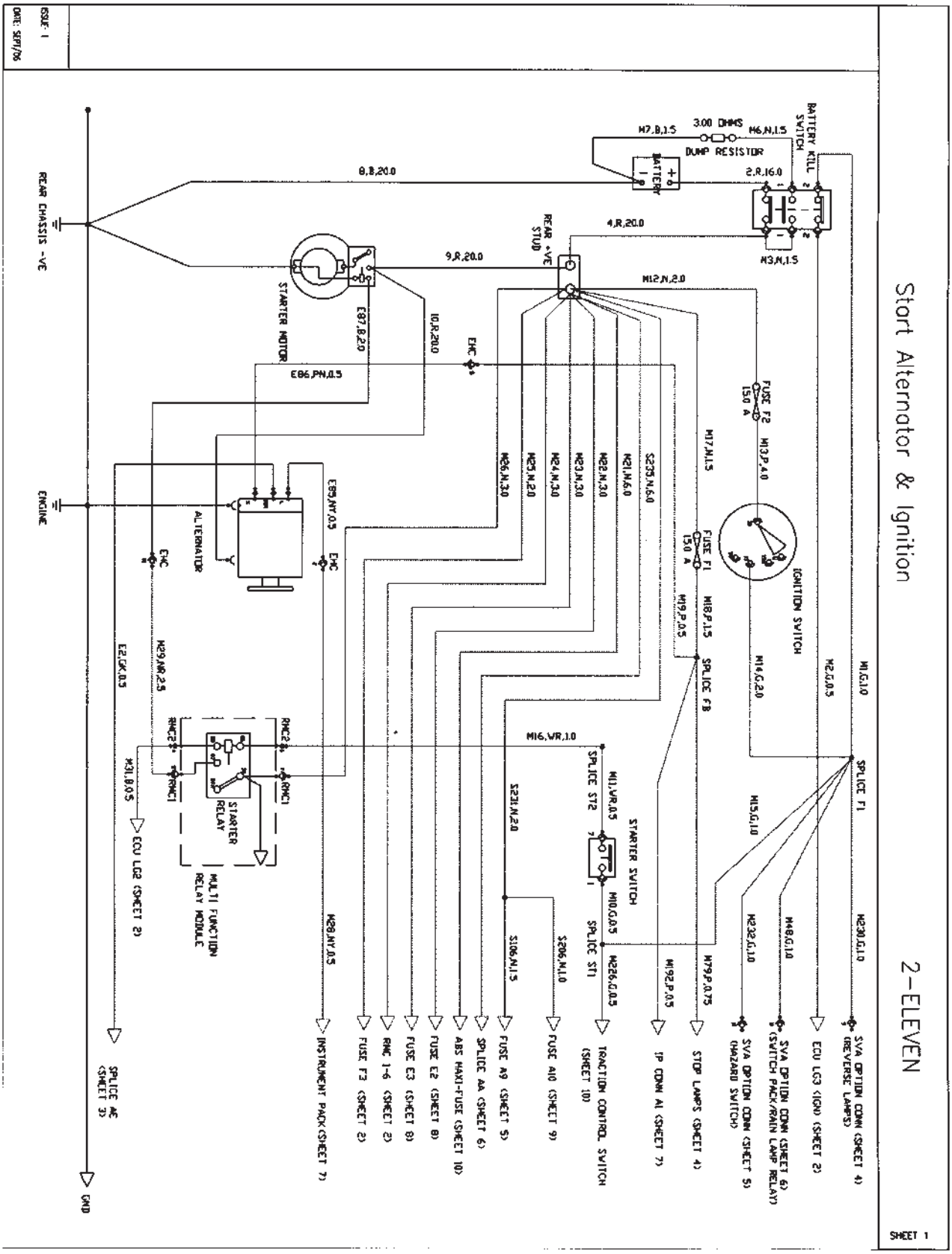

Downloaded from www.Manualslib.com manuals search engine

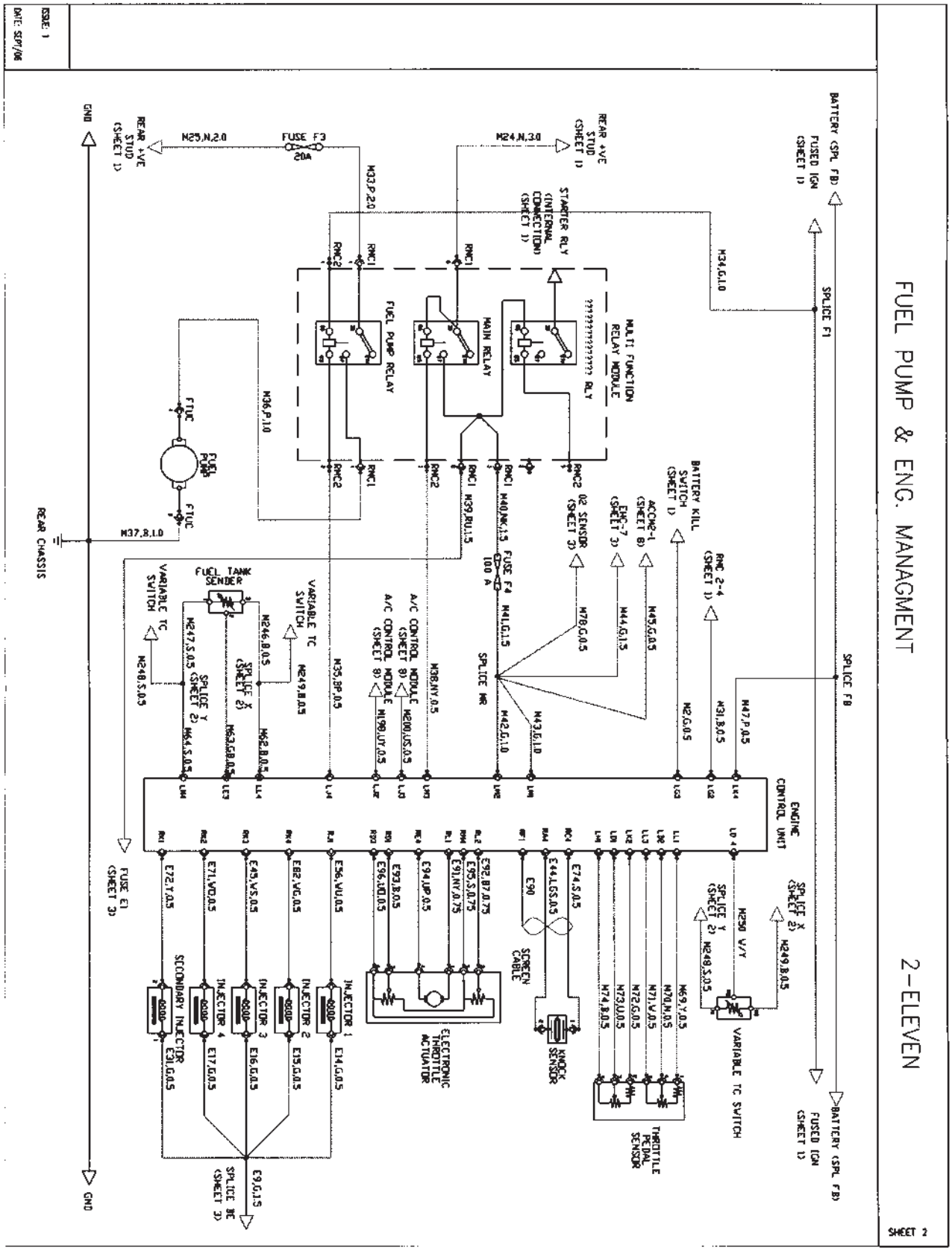

Downloaded from www.Manualslib.com manuals search engine

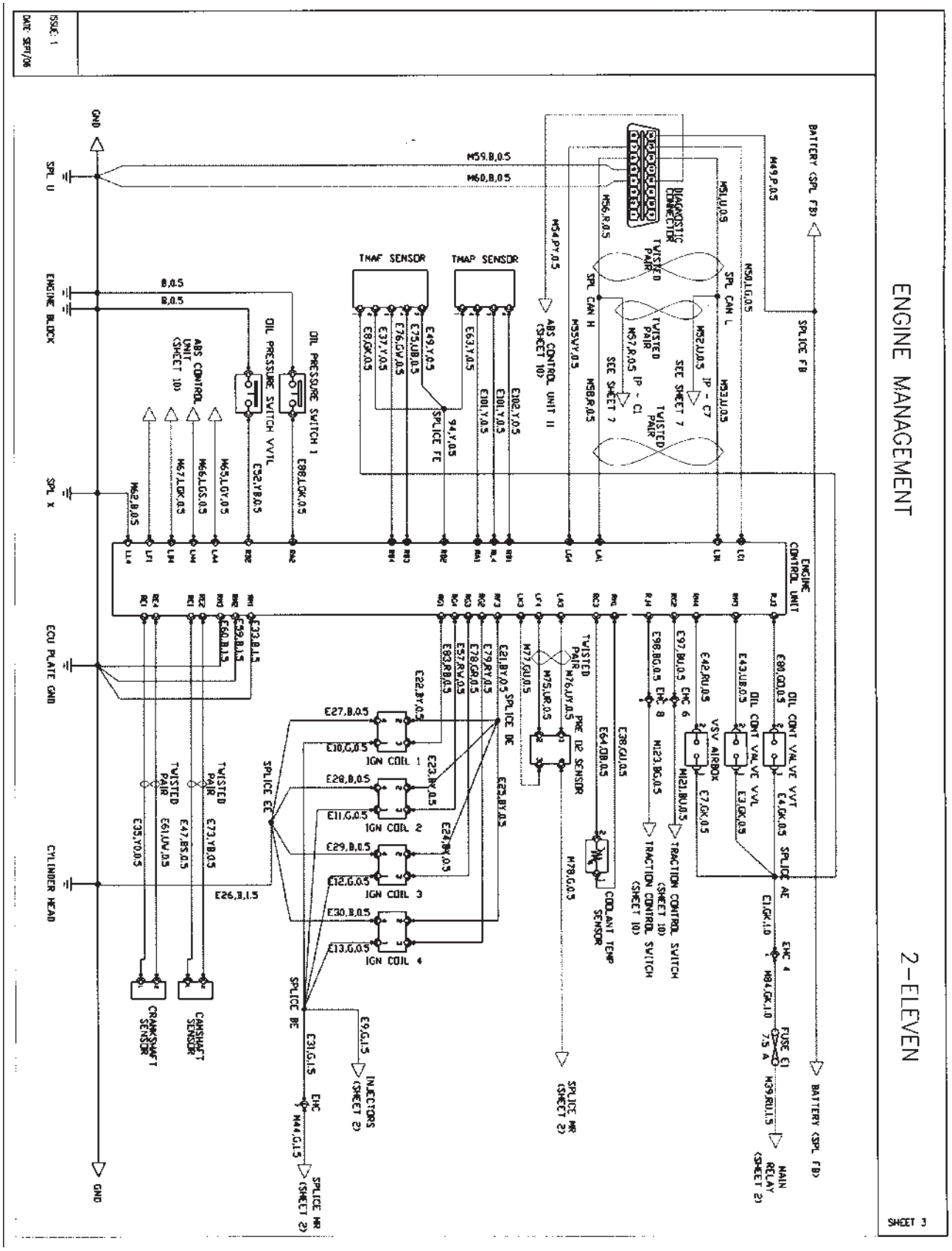

Downloaded from www.Manualslib.com manuals search engine

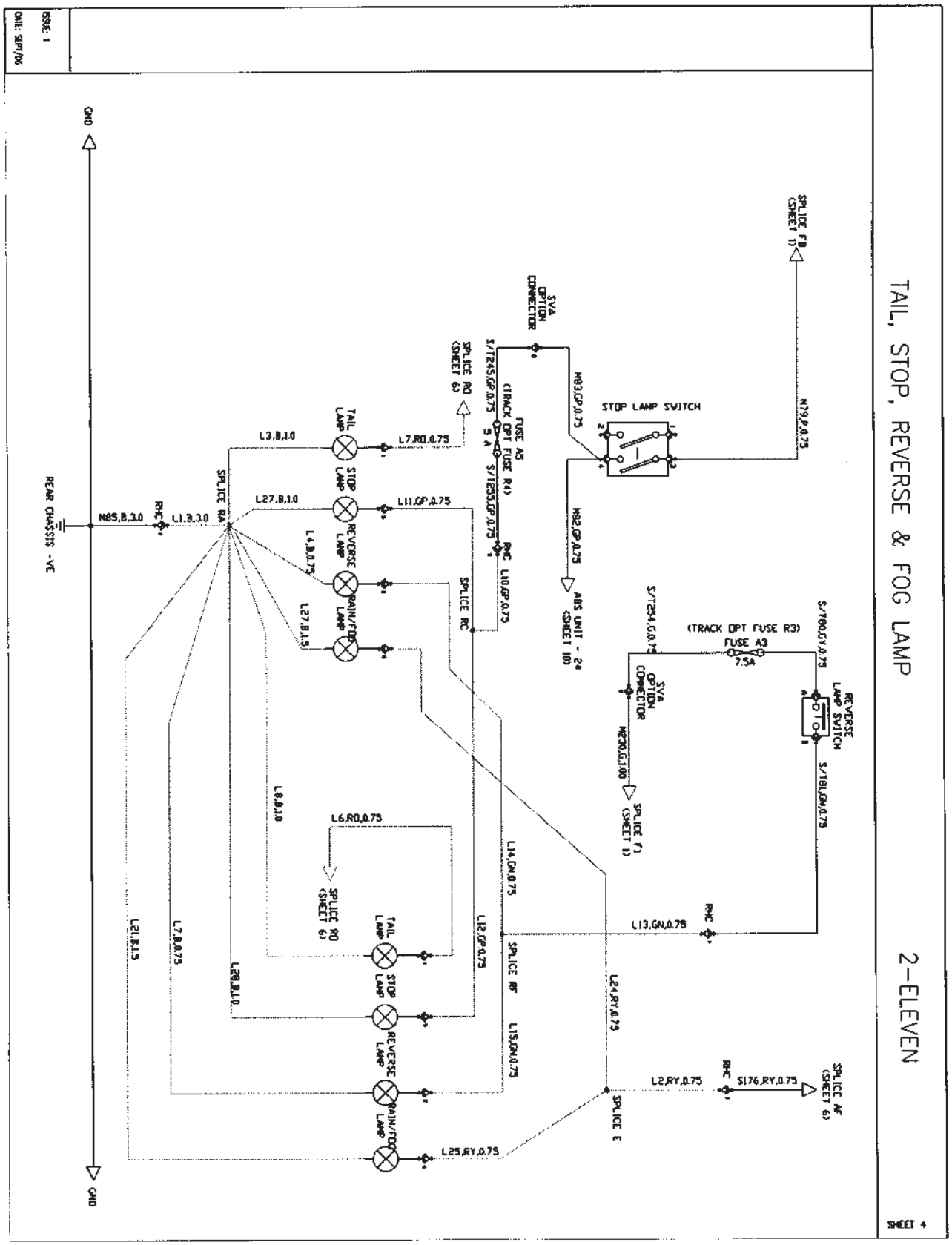

Downloaded from www.Manualslib.com manuals search engine

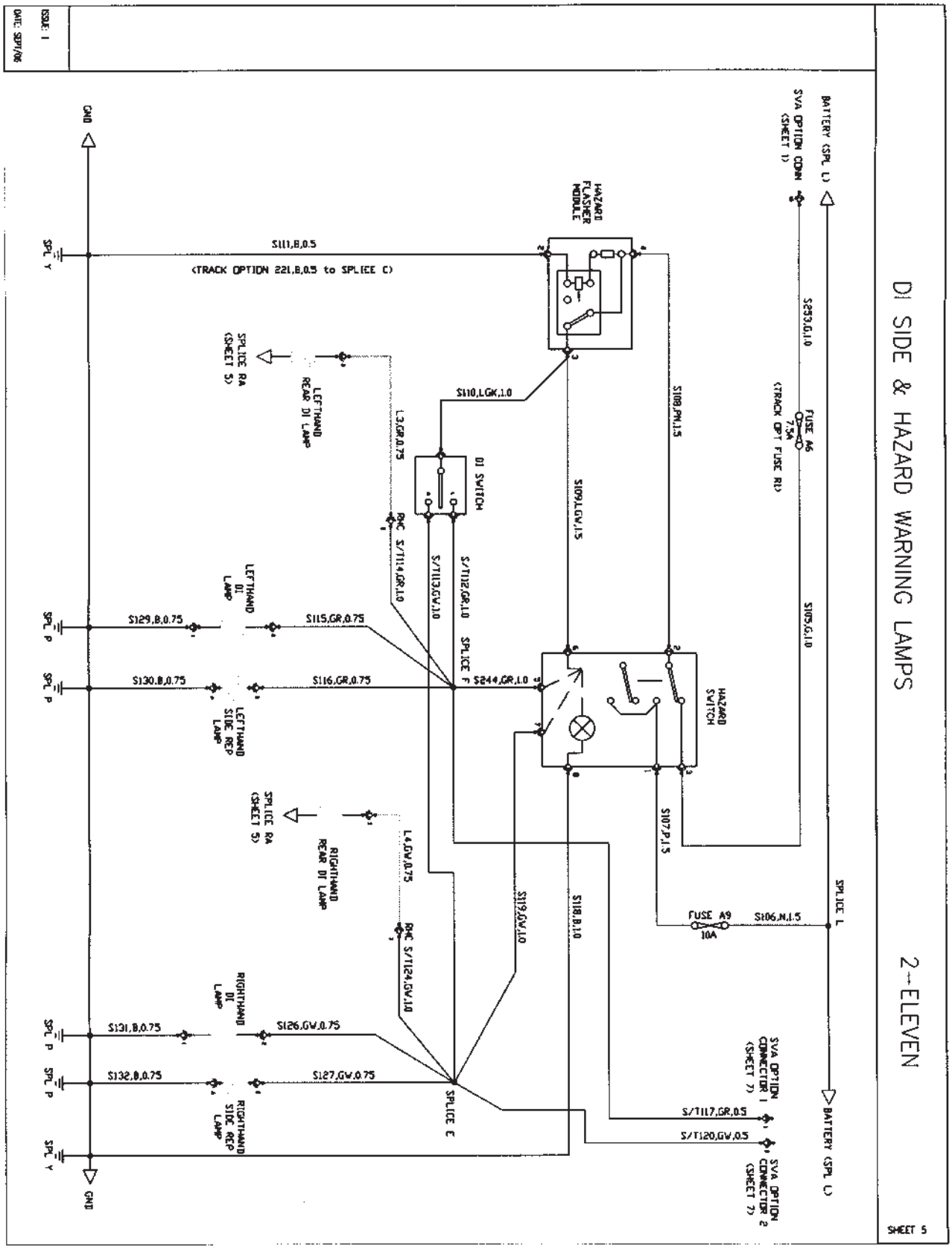

Downloaded from www.Manualslib.com manuals search engine

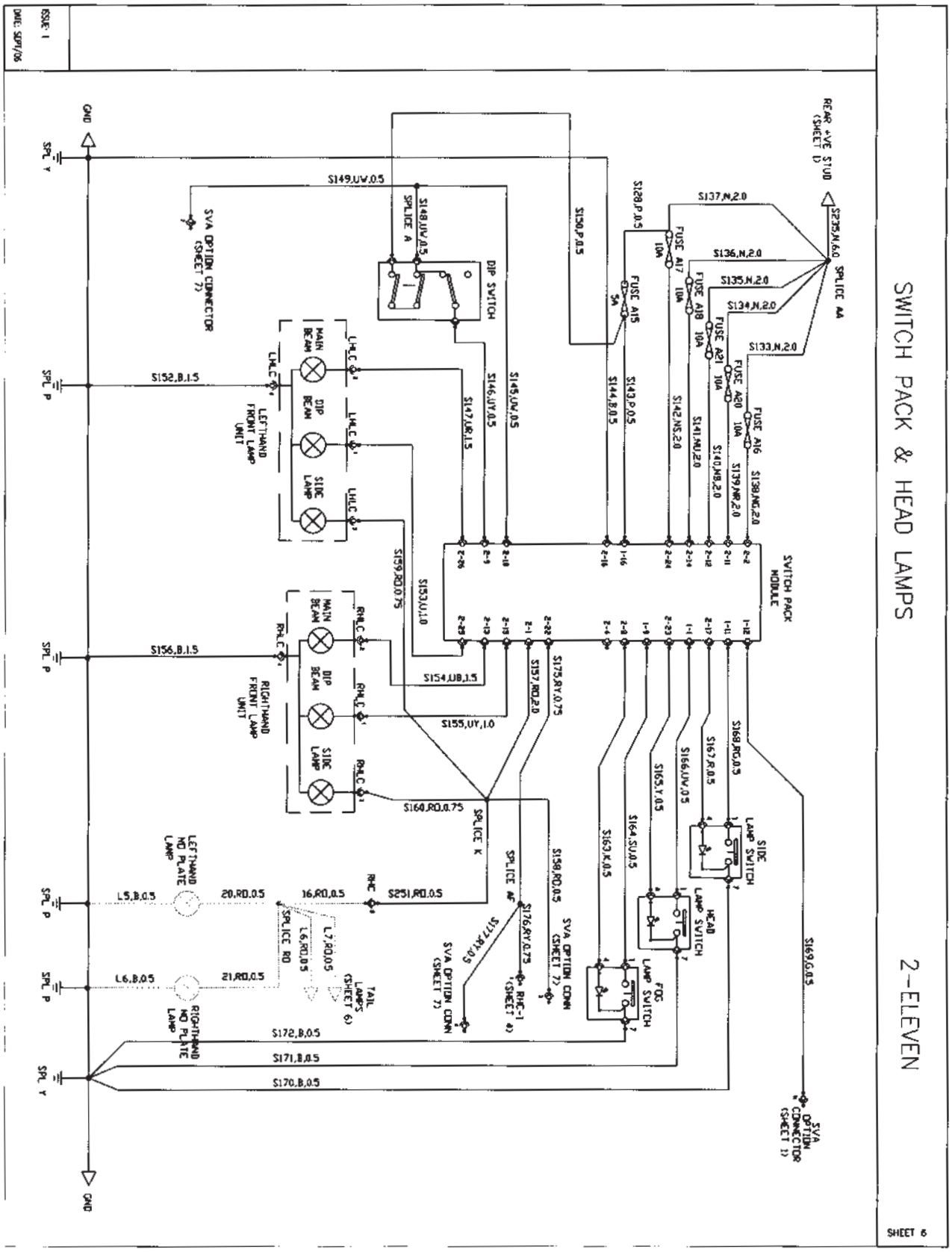

Downloaded from www.Manualslib.com manuals search engine

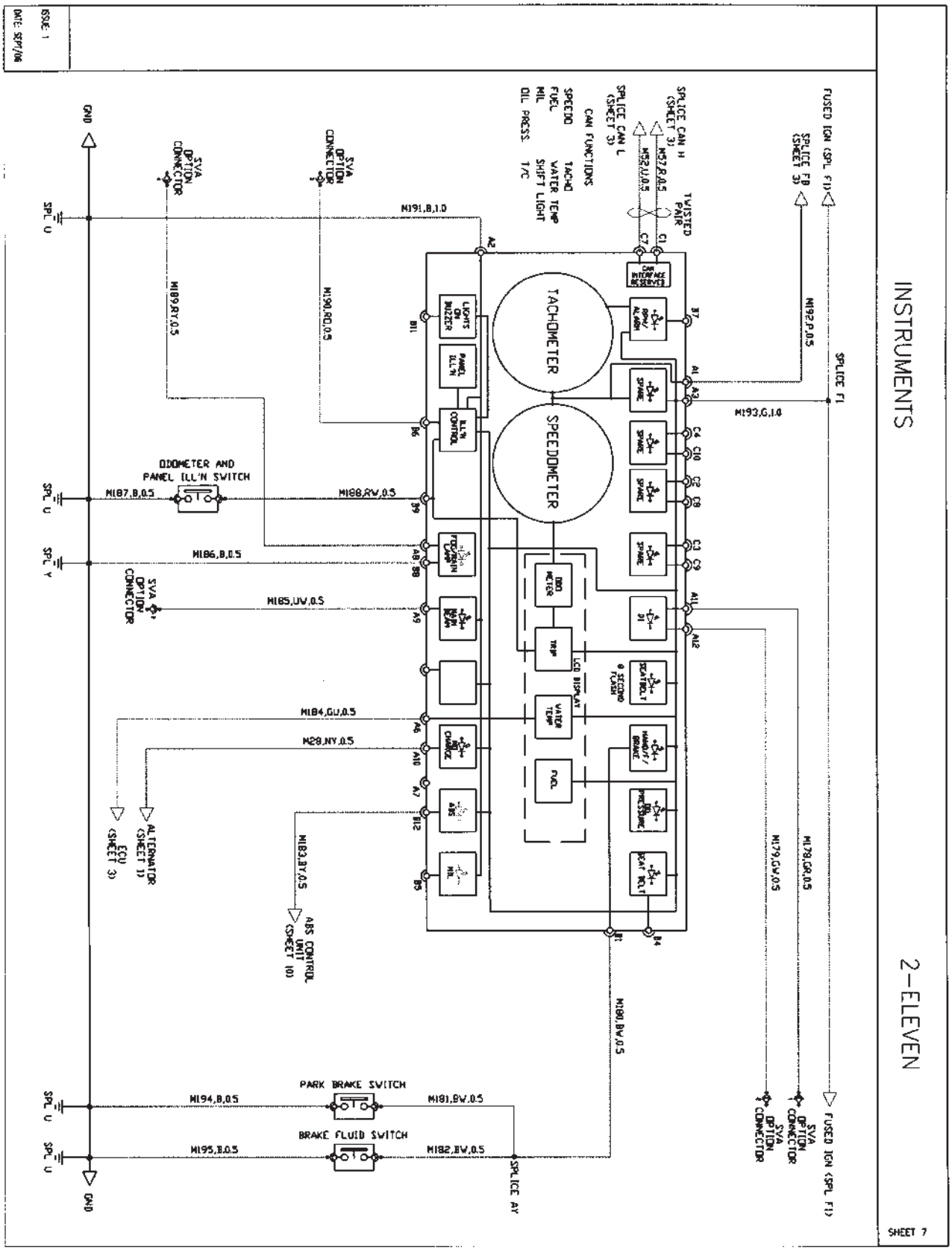

Downloaded from www.Manualslib.com manuals search engine

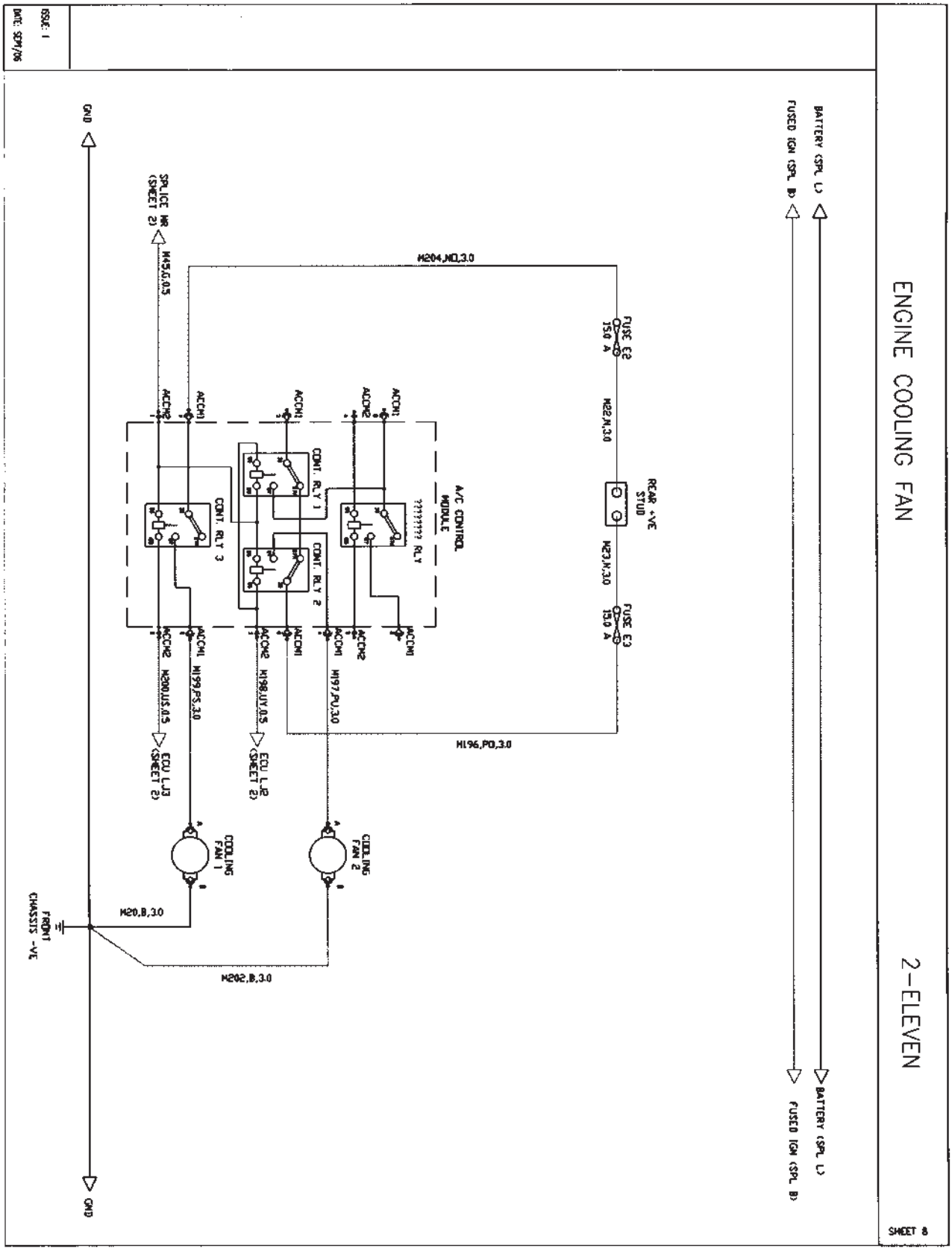

Downloaded from www.Manualslib.com manuals search engine

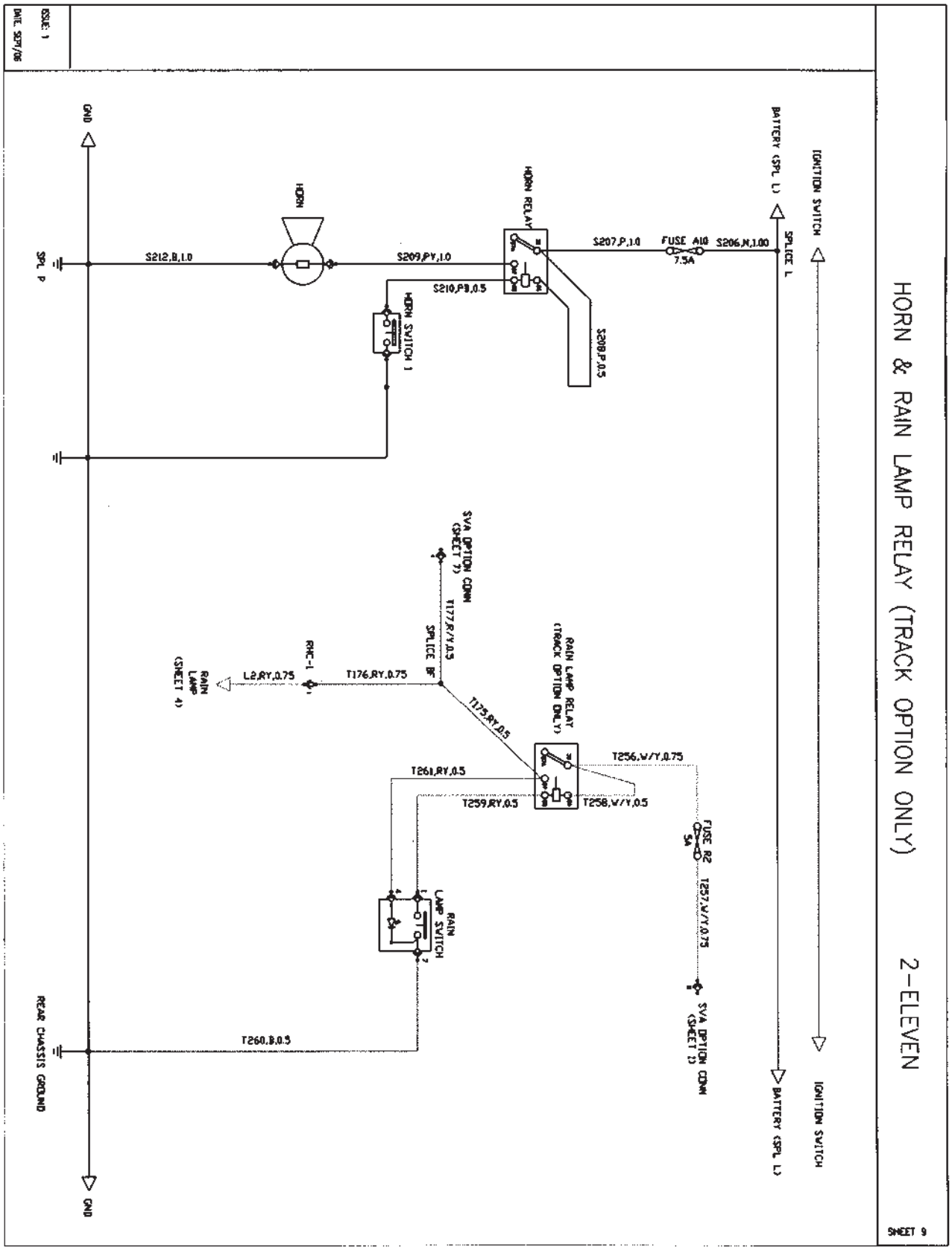

Downloaded from www.Manualslib.com manuals search engine

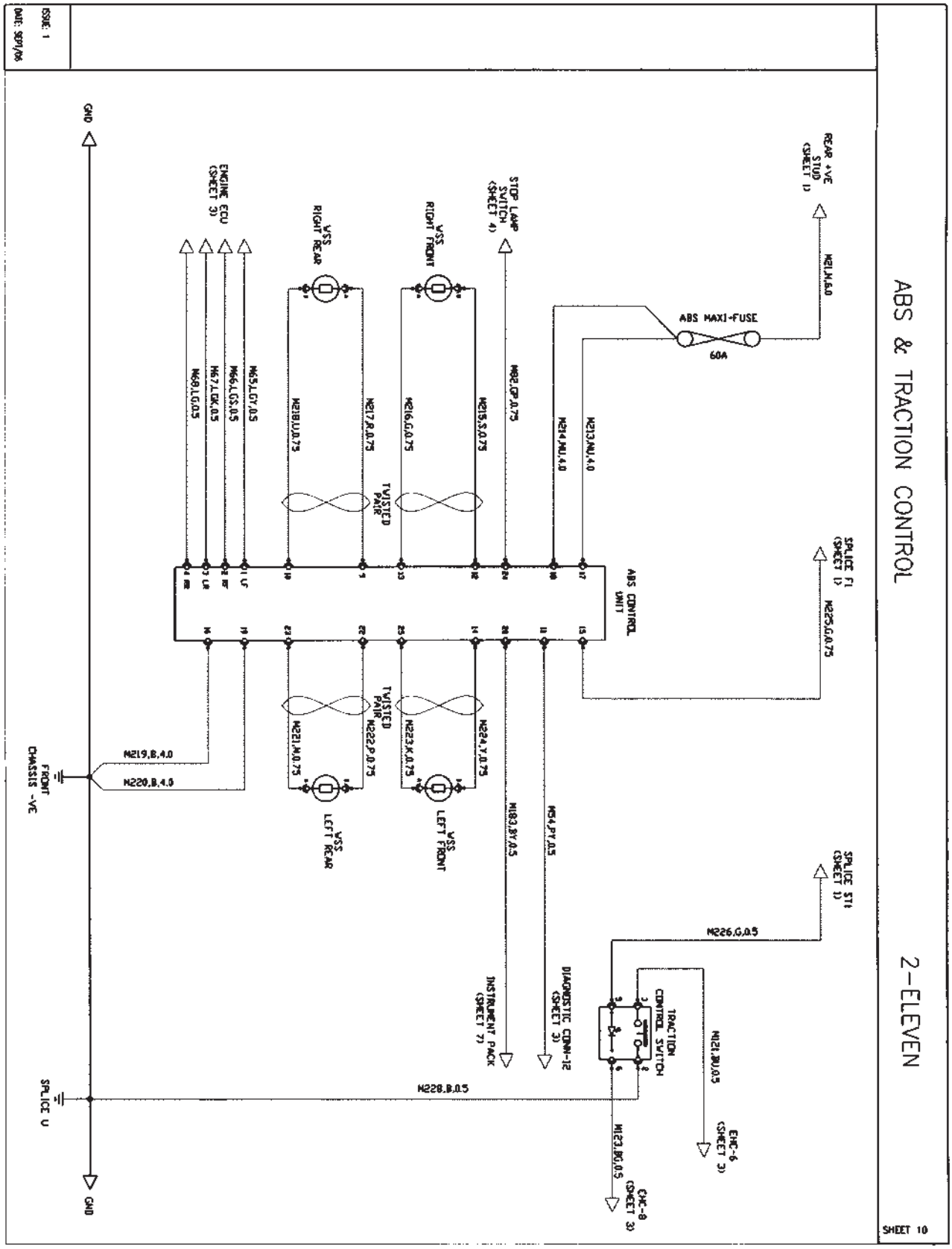

Downloaded from www.Manualslib.com manuals search engine

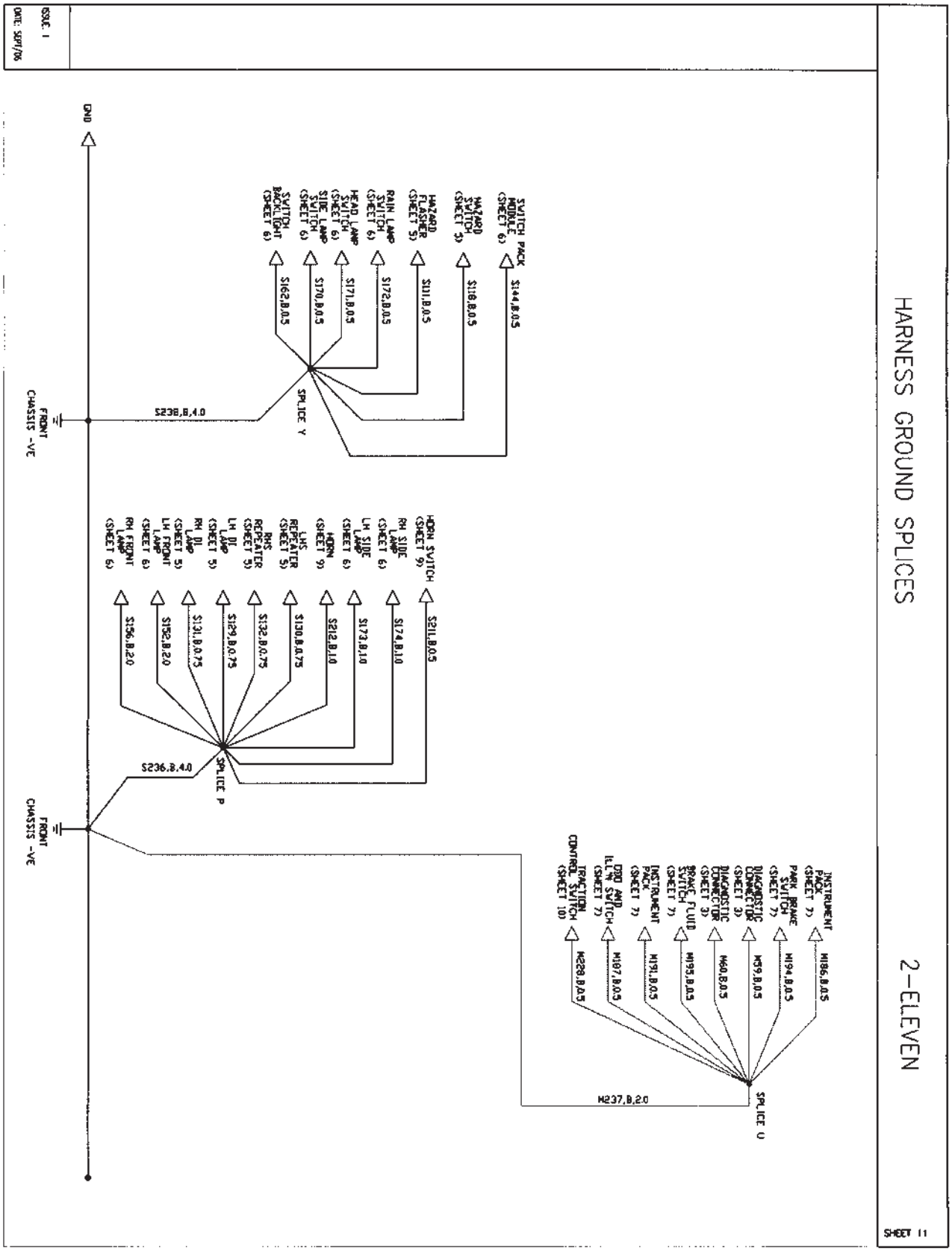

Downloaded from www.Manualslib.com manuals search engine

FUSE LAYOUT (BASE AND SVA VEHICLES)

2-ELEVEN

SHEET 12

FUSE	APPLICATION	RATING
A1		
A2		
A3	REVERSE LAMPS	7.5A
A4		
A5	BRAKE LAMPS	5A
A6	INDICATORS	7.5A
A7		
A8		
A9	HAZARD	10A
A10	HORN	7.5A
A11		
A12		
A13		
A14		
A15	SWITCH PACK & DIP SWITCH	15A
A16	SIDELAMP/FOG LAMP	10A
A17	DIP BEAM LH HEADLAMP	10A
A18	DIP BEAM RH HEADLAMP	10A
A19		
A20	MAIN BEAM LH HEADLAMP	10A
A21	MAIN BEAM RH HEADLAMP	10A
A22		
E1	ENGINE CONTROL RELAY	7.5A
E2	COOLING FAN 1	15A
E3	COOLING FAN 2	15A
E4		
F1	BATTERY SERVICES SPLICE FB	15A
F2	IGNITION SERVICES SPLICE F1	15A
F3	FUEL PUMP	20A
F4	MAIN RELAY	10A

FUSEBOX A (BATTERY BOX)

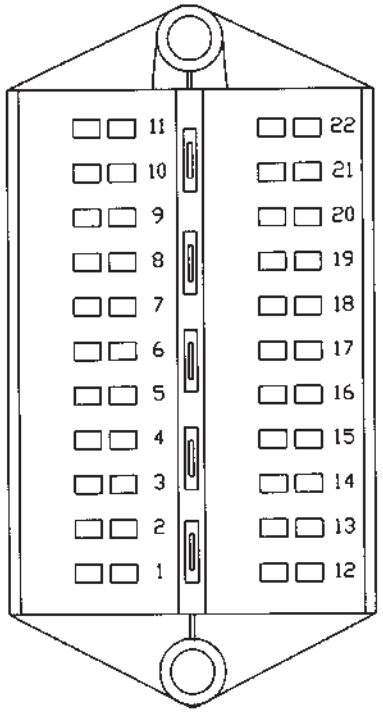

FUSEBOX E (REAR)

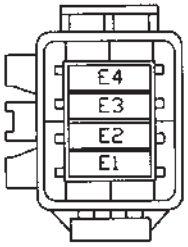

FUSEBOX F (REAR)

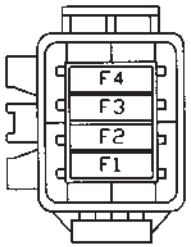

ISSUE: 1

DATE: SEPT/06

Downloaded from www.Manualslib.com manuals search engine

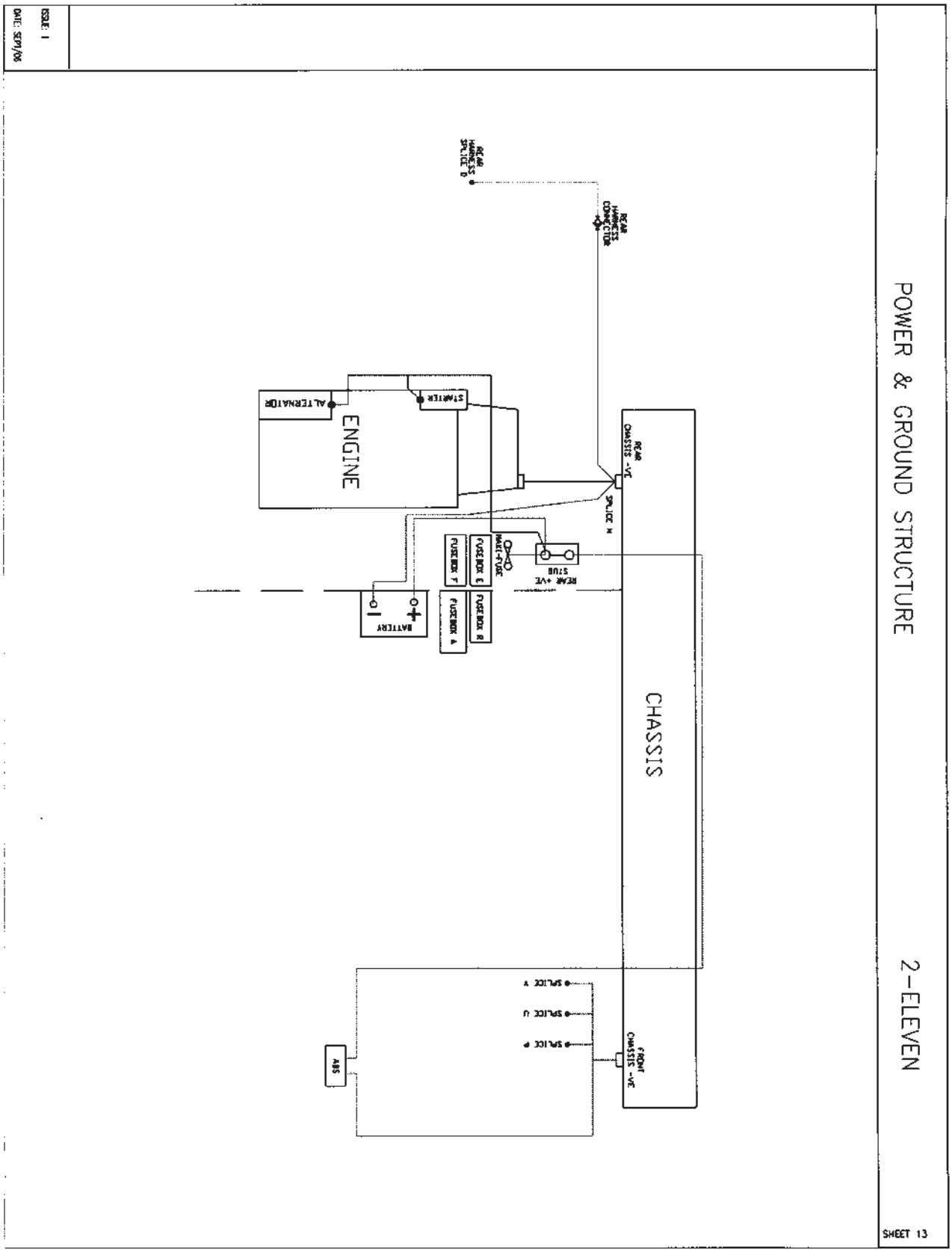

Downloaded from www.Manualslib.com manuals search engine

FUSE LAYOUT (BASE AND TRACK VEHICLES)

2-ELEVEN

SHEET 14

FUSE	APPLICATION	RATING
R1	DI LAMPS	5A
R2	RAIN LAMP	5A
R3	REVERSE LAMPS	5A
R4	STOP LAMPS	5A

FUSEBOX R (BATTERY BOX)

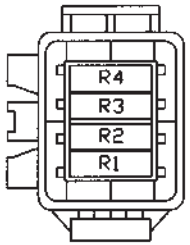

FUSE	APPLICATION	RATING
E1	ENGINE CONTROL RELAY	7.5A
E2	COOLING FAN 1	15A
E3	COOLING FAN 2	15A
E4		
F1	BATTERY SERVICES SPLICE FB	15A
F2	IGNITION SERVICES SPLICE F1	15A
F3	FUEL PUMP	20A
F4	MAIN RELAY	10A

FUSEBOX E (REAR)

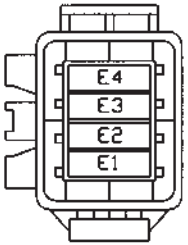

FUSEBOX F (REAR)

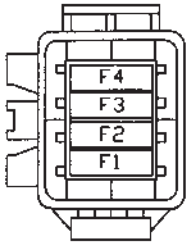

ISSUE: 1

DATE: SEPT/06

Downloaded from www.Manualslib.com manuals search engine