OWNER'S MANUAL

Crosstrek

2017

Love. It's what makes a Subaru, a Subaru.

SUBARU
Confidence in Motion

Foreword

Congratulations on choosing a SUBARU vehicle. This Owner's Manual has all the information necessary to keep your SUBARU in excellent condition and to properly maintain the emission control system for minimizing emission pollutants. We urge you to read this manual carefully so that you may understand your vehicle and its operation. For information not found in this Owner's Manual, such as details concerning repairs or adjustments, please contact the SUBARU dealer from whom you purchased your SUBARU or the nearest SUBARU dealer.

The information, specifications and illustrations found in this manual are those in effect at the time of printing. FUJI HEAVY INDUSTRIES LTD. reserves the right to change specifications and designs at any time without prior notice and without incurring any obligation to make the same or similar changes on vehicles previously sold. This Owner's Manual applies to all models and covers all equipment, including factory installed options. Some explanations, therefore may be for equipment not installed in your vehicle.

Please leave this manual in the vehicle at the time of resale. The next owner will need the information found herein.

FUJI HEAVY INDUSTRIES LTD., TOKYO, JAPAN

SUBARU is a registered trademark of FUJI HEAVY INDUSTRIES LTD.

Ⓒ Copyright 2016 FUJI HEAVY INDUSTRIES LTD.

Vehicle types

This manual describes the following vehicle types.

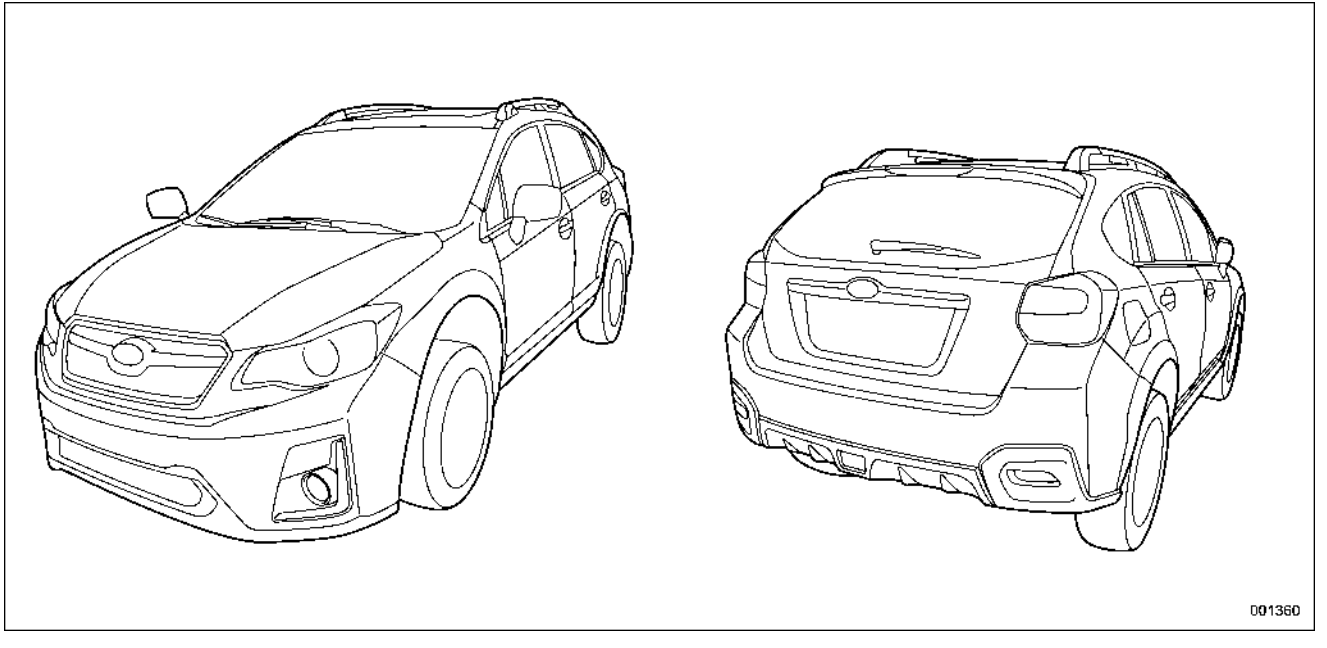

Warranties

■ Warranties for U.S.A.

SUBARU vehicles distributed by Subaru of America, Inc. and sold at retail by an authorized SUBARU dealer in the United States come with the following warranties:

- **SUBARU Limited Warranties**
- **Federal Emission Control Systems Warranties**
- **California Emissions Control Systems Warranties**

All warranty information, including applicability, details of coverage and exclusions, is in the “Warranty and Maintenance Booklet”. Read these warranties carefully.

■ Warranties for Canada

SUBARU vehicles distributed by Subaru Canada, Inc. and sold at retail by an authorized SUBARU dealer in Canada come with the following warranties:

- **SUBARU Limited Warranty**
- **Emission Control System Warranty**

All warranty information, including applicability, details of coverage and exclusions, is in the “Warranty and Service Booklet”. Read these warranties carefully.

■ Warranties except for U.S.A. and Canada

All warranty information, including details of coverage and exclusions, is in the “Warranty and Maintenance Booklet”. Read these warranties carefully.

■ Models with HID headlights

⚠ CAUTION

High Intensity Discharge (HID) headlights contain mercury. For that reason, it is necessary to remove HID headlights before vehicle disposal. Once removed, please reuse, recycle or dispose of the HID headlights as hazardous waste.

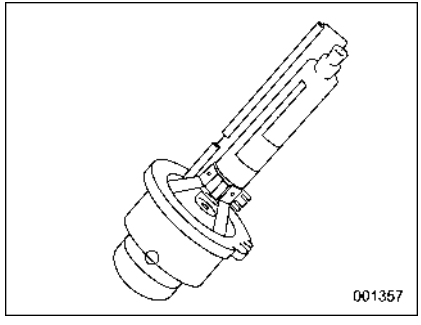

⚠ CAUTION

This vehicle is equipped with HID headlights that use bulbs which contain mercury. Should your vehicle or HID headlight assembly need to be replaced, recycled or disposed, the HID Headlight bulbs should be removed before disposal. Removed HID headlight bulbs containing mercury should be recycled, re-used or disposed as hazardous waste according to applicable laws. For more information on the disposal and safe handling of HID bulbs, please visit https://www.ec.gc.ca/mercure-mercury/

■ Models without HID headlights

NOTE

This vehicle does not contain mercury devices or parts.

How to use this Owner's Manual

■ Using your Owner's Manual

Before you operate your vehicle, carefully read this manual. To protect yourself and extend the service life of your vehicle, follow the instructions in this manual. Failure to observe these instructions may result in serious injury and damage to your vehicle.

This manual is composed of fourteen chapters. Each chapter begins with a brief table of contents, so you can usually tell at a glance if that chapter contains the information you want.

Chapter 1: Seat, seatbelt and SRS airbags
This chapter informs you how to use the seat and seatbelt and contains precautions for the SRS airbags.

Chapter 2: Keys and doors
This chapter informs you how to operate the keys, locks and windows.

Chapter 3: Instruments and controls
This chapter informs you about the operation of instrument panel indicators and how to use the instruments and other switches.

Chapter 4: Climate control
This chapter informs you how to operate the climate control.

Chapter 5: Audio
This chapter informs you how to operate your audio system.

Chapter 6: Interior equipment
This chapter informs you how to operate interior equipment.

Chapter 7: Starting and operating
This chapter informs you how to start and operate your SUBARU.

Chapter 8: Driving tips
This chapter informs you how to drive your SUBARU in various conditions and explains some safety tips on driving.

Chapter 9: In case of emergency
This chapter informs you what to do if you have a problem, such as a flat tire or engine overheating.

Chapter 10: Appearance care
This chapter informs you how to keep your SUBARU looking good.

Chapter 11: Maintenance and service
This chapter informs you when you need to take your SUBARU to the dealer for scheduled maintenance and informs you how to keep your SUBARU running properly.

Chapter 12: Specifications
This chapter informs you about dimensions and capacities of your SUBARU.

Chapter 13: Consumer information and Reporting safety defects
This chapter informs you about Uniform tire quality grading standards and Reporting safety defects.

Chapter 14: Index
This is an alphabetical listing of all that's in this manual. You can use it to quickly find something you want to read.

For models with EyeSight system:
For details about the EyeSight system, refer to the Owner's Manual supplement for the EyeSight system.

■ Safety warnings

You will find a number of WARNINGs, CAUTIONs and NOTEs in this manual.

These safety warnings alert you to potential hazards that could result in injury to you or others.

Please read these safety warnings as well as all other portions of this manual carefully in order to gain a better understanding of how to use your SUBARU vehicle safely.

⚠ WARNING

A WARNING indicates a situation in which serious injury or death could result if the warning is ignored.

⚠ CAUTION

A CAUTION indicates a situation in which injury or damage to your vehicle, or both, could result if the caution is ignored.

NOTE

A NOTE gives information or suggestions how to make better use of your vehicle.

■ Safety symbol

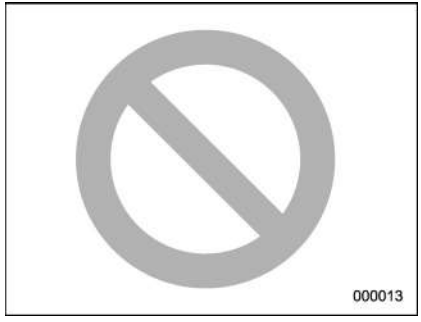

You will find a circle with a slash through it in this manual. This symbol means “Do not”, “Do not do this”, or “Do not let this happen”, depending upon the context.

■ Abbreviation list

You may find several abbreviations in this manual. The meanings of the abbreviations are shown in the following list.

Abbreviation	Meaning
A/C	Air conditioner
ALR/ELR	Automatic locking retractor/ Emergency locking retractor
ABS	Anti-lock brake system
AKI	Anti knock index
ALR	Automatic locking retractor
AWD	All-wheel drive
BSD/RCTA	Blind Spot Detection/Rear Cross Traffic Alert
CVT	Continuously variable transmission
DRL	Daytime running light
EBD	Electronic brake force distribution
ELR	Emergency locking retractor
GAW	Gross axle weight
GAWR	Gross axle weight rating
GPS	Global positioning system
GVW	Gross vehicle weight
GVWR	Gross vehicle weight rating
HID	High intensity discharge

– CONTINUED –

Abbreviation	Meaning
INT	Intermittent
LATCH	Lower anchors and tethers for children
LED	Light emitting diode
MIL	Malfunction indicator light
MMT	Methylcyclopentadienyl manganese tricarbonyl
MT	Manual transmission
OBD	On-board diagnostics
RON	Research octane number
SRF	Steering responsive fog lights system
SRS	Supplemental restraint system
TIN	Tire identification number
TPMS	Tire pressure monitoring system

Vehicle symbols

There are some of the symbols you may see on your vehicle.

For warning and indicator lights, refer to “Warning and indicator lights” ☞23.

Mark	Name
	WARNING
	CAUTION
	Read these instructions carefully
	Wear eye protection
	Battery fluid contains sulfuric acid
	Keep children away
	Keep flames away
	Prevent explosions

Safety precautions when driving

■ Seatbelt and SRS airbag

WARNING

- **All persons in the vehicle should fasten their seatbelts BEFORE the vehicle starts to move. Otherwise, the possibility of serious injury becomes greater in the event of a sudden stop or accident.**
- **To obtain maximum protection in the event of an accident, the driver and all passengers must always wear seatbelts when in the vehicle. The SRS (Supplemental Restraint System) airbag does not do away with the need to fasten seatbelts. In combination with the seatbelts, it offers the best combined protection in case of a serious accident.**

  Not wearing a seatbelt increases the chance of severe injury or death in a crash even when the vehicle has the SRS airbag.

- **The SRS airbags deploy with considerable speed and force. Occupants who are out of proper position when the SRS airbag deploys could suffer very serious injuries. Because the SRS airbag needs enough space for deployment, the driver should always sit upright and well back in the seat as far from the steering wheel as practical while still maintaining full vehicle control and the front passenger should move the seat as far back as possible and sit upright and well back in the seat.**

For instructions and precautions, carefully read the following sections.

- For the seatbelt system, refer to "Seatbelts" ☞1-11.
- For the SRS airbag system, refer to "*SRS airbag (Supplemental Restraint System airbag)" ☞1-37.

■ Child safety

⚠ WARNING

- **Never hold a child on your lap or in your arms while the vehicle is moving. The passenger cannot protect the child from injury in a collision, because the child will be caught between the passenger and objects inside the vehicle.**
- **While riding in the vehicle, infants and small children should always be placed in the REAR seat in an infant or child restraint system which is appropriate for the child's age, height and weight. If a child is too big for a child restraint system, the child should sit in the REAR seat and be restrained using the seatbelts. According to accident statistics, children are safer when properly restrained in the rear seating positions than in the front seating positions. Never allow a child to stand up or kneel on the seat.**
- **Place children in the REAR seat properly restrained at all times in a child restraint device or in a seatbelt. The SRS airbag deploys with considerable speed and force and can injure or even kill children, especially if they are not restrained or improperly restrained. Because children are lighter and weaker than adults, their risk of being injured from deployment is greater.**
- **NEVER INSTALL A FORWARD OR REARWARD FACING CHILD SEAT IN THE FRONT SEAT. DOING SO RISKS SERIOUS INJURY OR DEATH TO THE CHILD BY PLACING THE CHILD'S HEAD TOO CLOSE TO THE SRS AIRBAG.**
- **Always turn the child safety locks to the "LOCK" position when children sit in the rear seat. Serious injury could result if a child accidentally opens the door and falls out. Refer to "Child safety locks" ☞2-33.**
- **Always lock the passenger's windows using the lock switch when children are riding in the vehicle. Failure to follow this procedure could result in injury to a child operating the power window. Refer to "Windows" ☞2-34.**
- **Never leave unattended children,**

– CONTINUED –

adults or animals in the vehicle. They could accidentally injure themselves or others through inadvertent operation of the vehicle. Also, on hot or sunny days, temperature in a closed vehicle could quickly become high enough to cause severe or possibly fatal injuries to them.

- **When leaving the vehicle, close all windows and lock all doors.**

For instructions and precautions, carefully read the following sections.

- For the seatbelt system, refer to "Seatbelts" ☞1-11.
- For the child restraint system, refer to "Child restraint systems" ☞1-24.
- For the SRS airbag system, refer to "*SRS airbag (Supplemental Restraint System airbag)" ☞1-37.

■ Engine exhaust gas (carbon monoxide)

⚠ WARNING

- **Never inhale engine exhaust gas. Engine exhaust gas contains carbon monoxide, a colorless and odorless gas which is dangerous, or even lethal, if inhaled.**
- **Always properly maintain the engine exhaust system to prevent engine exhaust gas from entering the vehicle.**
- **Never run the engine in a closed space, such as a garage, except for the brief time needed to drive the vehicle in or out of it.**
- **Avoid remaining in a parked vehicle for a lengthy time while the engine is running. If that is unavoidable, then use the ventilation fan to force fresh air into the vehicle.**
- **Always keep the front ventilator inlet grille free from snow, leaves or other obstructions to ensure that the ventilation system always works properly.**
- **If at any time you suspect that exhaust fumes are entering the vehicle, have the problem checked and corrected as soon as possible. If you must drive under these conditions, drive only with all windows fully open.**
- **Keep the rear gate closed while driving to prevent exhaust gas from entering the vehicle.**

■ Drinking and driving

⚠ WARNING

Drinking and then driving is very dangerous. Alcohol in the bloodstream delays your reaction time and impairs your perception, judgment and attentiveness. If you drive after drinking – even if you drink just a little – it will increase the risk of being involved in a serious or fatal accident, injuring or killing yourself, your passengers and others. In addition, if you are injured in the accident, alcohol may increase the severity of that injury.

Please don't drink and drive.

Drunken driving is one of the most frequent causes of accidents. Since alcohol affects all people differently, you may have consumed too much alcohol to drive safely even if the level of alcohol in your blood is below the legal limit. The safest thing you can do is never drink and drive. However if you have no choice but to drive, stop drinking and sober up completely before getting behind the wheel.

■ Drugs and driving

⚠ WARNING

There are some drugs (over the counter and prescription) that can delay your reaction time and impair your perception, judgment and attentiveness. If you drive after taking them, it may increase your, your passengers' and other persons' risk of being involved in a serious or fatal accident.

If you are taking any drugs, check with your doctor or pharmacist or read the literature that accompanies the medication to determine if the drug you are taking can impair your driving ability. Do not drive after taking any medications that can make you drowsy or otherwise affect your ability to safely operate a motor vehicle. If you have a medical condition that requires you to take drugs, please consult with your doctor.

Never drive if you are under the influence of any illicit mind-altering drugs. For your own health and well-being, we urge you not to take illegal drugs in the first place and to seek treatment if you are addicted to those drugs.

■ Driving when tired or sleepy

⚠ WARNING

When you are tired or sleepy, your reaction time will be delayed and your perception, judgment and attentiveness will be impaired. If you drive when tired or sleepy, your, your passengers' and other persons' chances of being involved in a serious accident may increase.

Please do not continue to drive but instead find a safe place to rest if you are tired or sleepy. On long trips, you should make periodic rest stops to refresh yourself before continuing on your journey. When possible, you should share the driving with others.

■ Modification of your vehicle

⚠ CAUTION

Your vehicle should not be modified other than with genuine SUBARU parts and accessories. Other types of modifications could affect its performance, safety or durability, and may even violate governmental regulations. In addition, damage or performance problems resulting from modification may not be covered under warranties.

■ Car phone/cell phone and driving

⚠ CAUTION

Do not use a car phone/cell phone while driving; it may distract your attention from driving and can lead to an accident. If you use a car phone/cell phone, pull off the road and park in a safe place before using your phone. In some States/Provinces, only hands-free phones may legally be used while driving.

– CONTINUED –

■ Driving vehicles equipped with navigation system

⚠ WARNING

Do not allow the monitor to distract your attention from driving. Also, do not operate the controls of the navigation system while driving. The loss of attention to driving could lead to an accident. If you wish to operate the controls of the navigation system, first take the vehicle off the road and stop it in a safe location.

■ Driving with pets

Unrestrained pets can interfere with your driving and distract your attention from driving. In a collision or sudden stop, unrestrained pets or cages can be thrown around inside the vehicle and hurt you or your passengers. Besides, the pets can be hurt under these situations. It is also for their own safety that pets should be properly restrained in your vehicle. Restrain a pet with a special traveling harness which can be secured to the rear seat with a seatbelt or use a pet carrier which can be secured to the rear seat by routing a seatbelt through the carrier's handle. Never restrain pets or pet carriers in the front passenger's seat. For further information, consult your veterinarian, local animal protection society or pet shop.

■ Tire pressures

Check and, if necessary, adjust the pressure of each tire (including the spare) at least once a month and before any long journey.

Check the tire pressure when the tires are cold. Use a pressure gauge to adjust the tire pressures to the values shown on the tire placard. For detailed information, refer to "Tires and wheels" ☞11-21.

⚠ WARNING

Driving at high speeds with excessively low tire pressures can cause the tires to deform severely and to rapidly become hot. A sharp increase in temperature could cause tread separation, and destruction of the tires. The resulting loss of vehicle control could lead to an accident.

■ Attaching accessories

⚠ WARNING

- **Do not attach any accessories, labels or stickers (other than properly placed inspection stickers) to the windshield. Such items may obstruct your view.**
- **If it is necessary to attach an accessory (such as an electronic toll collection (ETC) device or security pass) to the windshield, consult your SUBARU dealer for details on the proper location.**

General information

■ California proposition 65 warning

⚠ WARNING

Engine exhaust, some of its constituents, and certain vehicle components contain or emit chemicals known to the State of California to cause cancer and birth defects or other reproductive harm. In addition, certain fluids in vehicles and certain components of product wear contain or emit chemicals known to the State of California to cause cancer and birth defects or other reproductive harm.

■ California Perchlorate Advisory

Certain vehicle components such as airbag modules, seatbelt pretensioners and keyless entry transmitter batteries may contain perchlorate material. Special handling may apply for service or vehicle end of life disposal. See www.dtsc.ca.gov/hazardouswaste/perchlorate.

■ Noise from under the vehicle

NOTE

You may hear a noise from under the vehicle approximately 5 to 10 hours after the ignition switch is turned to the "LOCK"/"OFF" position. However, this does not indicate a malfunction. This noise is caused by the operation of the fuel evaporation leakage checking system and the operation is normal. The noise will stop after approximately 15 minutes.

■ Event data recorder

This vehicle is equipped with an event data recorder (EDR). The main purpose of an EDR is to record, in certain crash or near crash-like situations, such as an air bag deployment or hitting a road obstacle, data that will assist in understanding how a vehicle's systems performed. The EDR is designed to record data related to vehicle dynamics and safety systems for a short period of time, typically 30 seconds or less. The EDR in this vehicle is designed to record such data as:

- How various systems in your vehicle were operating;
- Whether or not the driver and passenger safety belts were buckled/fastened;
- How far (if at all) the driver was depressing the accelerator and/or brake pedal; and,
- How fast the vehicle was traveling.

These data can help provide a better understanding of the circumstances in which crashes and injuries occur. NOTE: EDR data are recorded by your vehicle only if a non-trivial crash situation occurs; no data are recorded by the EDR under normal driving conditions and no personal data (e.g., name, gender, age, and crash location) are recorded. However, other parties, such as law enforcement, could combine the EDR data with the type of personally identifying data routinely acquired during a crash investigation.

To read data recorded by an EDR, special equipment is required, and access to the vehicle or the EDR is needed. In addition to the vehicle manufacturer, other parties, such as law enforcement, that have the special equipment, can read the information if they have access to the vehicle or the EDR.

Table of contents

Seat, seatbelt and SRS airbags	*1*
Keys and doors	*2*
Instruments and controls	*3*
Climate control	*4*
Audio	*5*
Interior equipment	*6*
Starting and operating	*7*
Driving tips	*8*
In case of emergency	*9*
Appearance care	*10*
Maintenance and service	*11*
Specifications	*12*
Consumer information and Reporting safety defects	*13*
Index	*14*

Illustrated index

■ Exterior

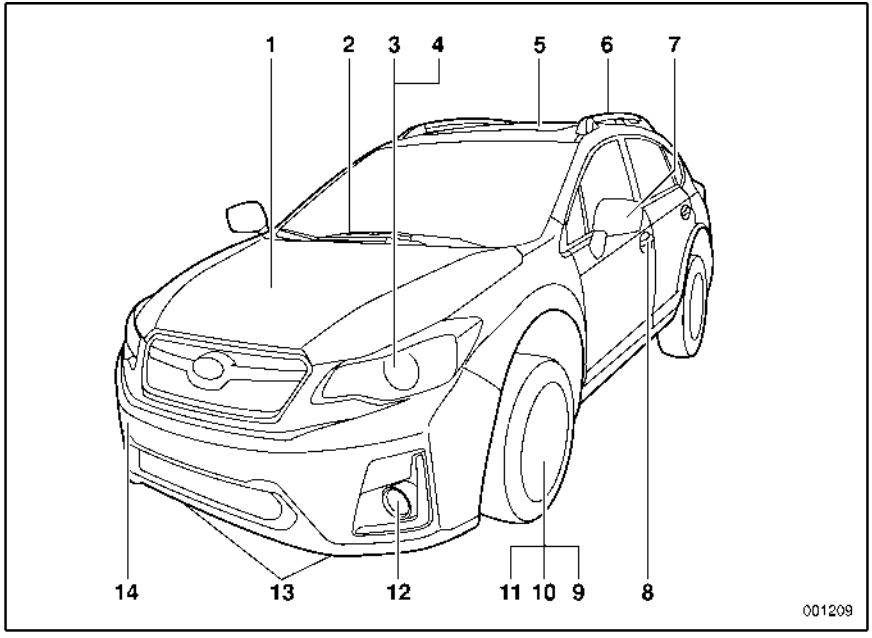

1) Engine hood (page 11-5)
2) Wiper (page 3-96)
3) Headlight (page 3-89)
4) Replacing bulbs (page 11-36)
5) Moonroof (page 2-39)
6) Roof rails (page 8-14)
7) Outside mirror (page 3-99)
8) Door locks (page 2-5)
9) Tire pressure (page 11-23)
10) Flat tires (page 9-5)
11) Snow tires (page 8-10)
12) Fog light (page 3-93)
13) Tie-down hooks (page 9-13)
14) Towing hook (page 9-13)

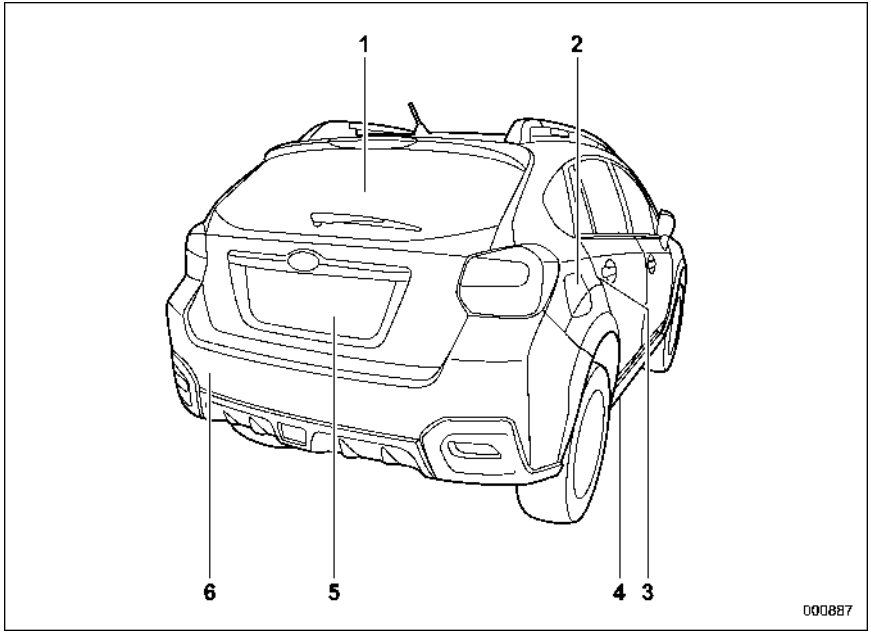

1) Rear window defogger (page 3-100)
2) Fuel filler lid and cap (page 7-4)
3) Child safety locks (page 2-33)
4) Tie-down hole (page 9-13)
5) Rear gate (page 2-37)
6) Towing hook (page 9-13)

– CONTINUED –

■ Interior

▼ Passenger compartment area

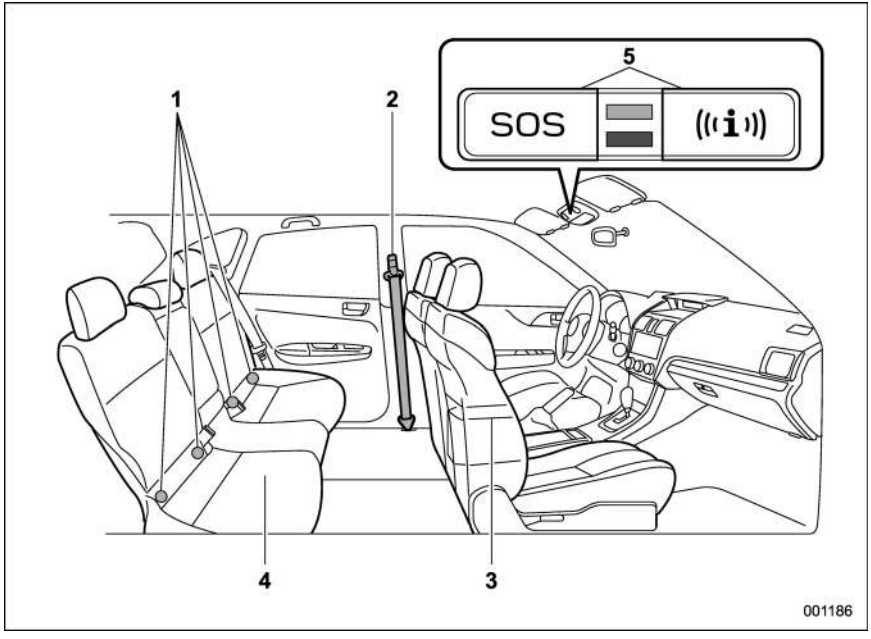

1) Lower anchorages for child restraint system (page 1-33)
2) Seatbelt (page 1-11)
3) Front seat (page 1-2)
4) Rear seat (page 1-7)
5) Buttons for SUBARU STARLINK

NOTE

For U.S.-spec. models with SUBARU STARLINK: Refer to the Owner's Manual supplement for SUBARU STARLINK.

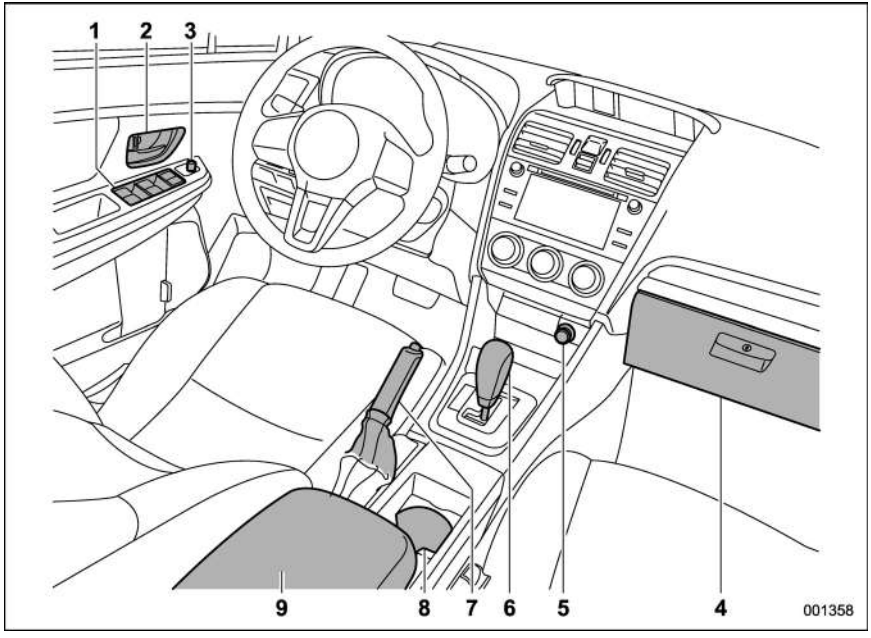

1) Power window switches (page 2-34)
2) Door locks (page 2-5)
3) Outside mirror switch (page 3-99)
4) Glove box (page 6-6)
5) Front power supply socket (page 6-8)
6) Shift lever (MT) (page 7-22)/Select lever (CVT) (page 7-23)
7) Parking brake lever (page 7-39)
8) Cup holder (page 6-7)
9) Center console (page 6-6)

– CONTINUED –

■ Instrument panel

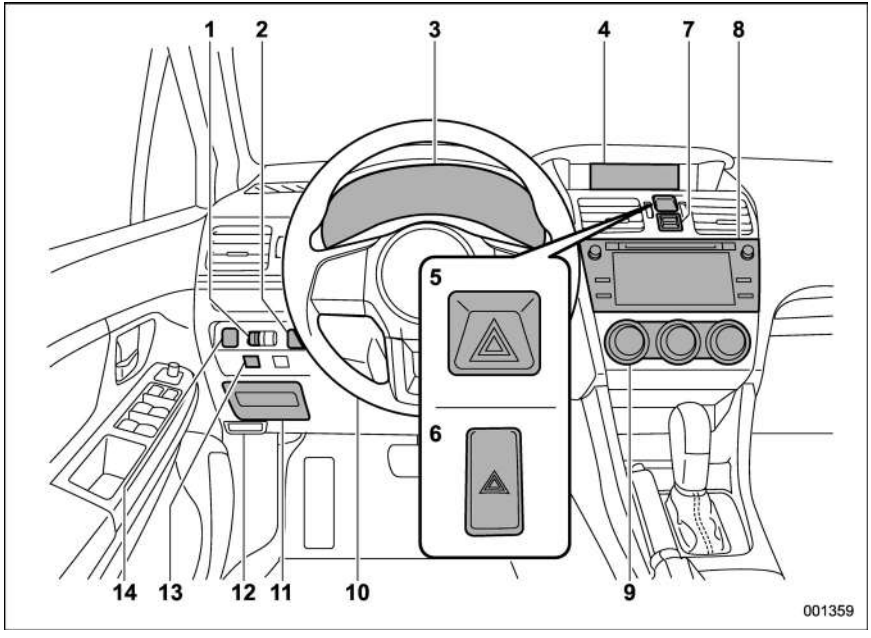

1) Illumination brightness control (page 3-92)
2) Vehicle Dynamics Control OFF switch (page 7-36)
3) Combination meter (page 3-9)
4) Information display (page 3-32)/Multi function display (page 3-42)
5) Hazard warning flasher switch (models with multi function display) (page 3-8)
6) Hazard warning flasher switch (models without multi function display) (page 3-8)
7) Multi function display control switches (page 3-42)
8) Audio (page 5-1)
9) Climate control (page 4-1)
10) Tilt/telescopic steering (page 3-102)
11) Fuse box (page 11-34)
12) Hood lock release knob (page 11-5)
13) BSD/RCTA OFF switch (page 7-48)
14) Steering responsive fog lights OFF switch (page 3-94)

NOTE

For models with the EyeSight system: Refer to the Owner's Manual supplement for the EyeSight system.

■ Steering wheel

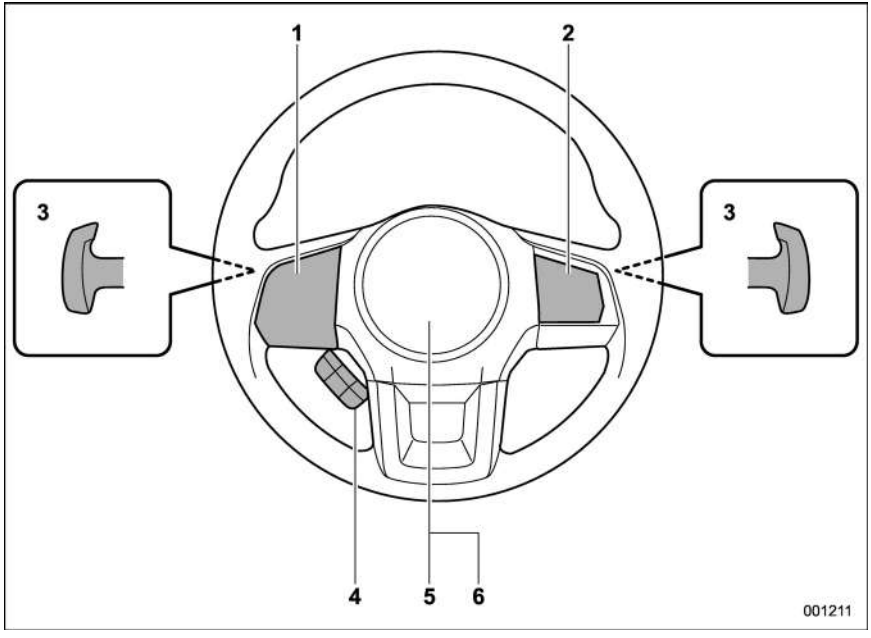

1) Audio control switches (page 5-62)/ Talk switch for voice command system (page 5-80)/Hands-free phone switches (page 5-72)
2) Cruise control (page 7-44)
3) Shift paddle (page 7-26)
4) Multi information display control switches (page 3-38)
5) SRS airbag (page 1-37)
6) Horn (page 3-102)

– CONTINUED –

■ Light control and wiper control levers/switches

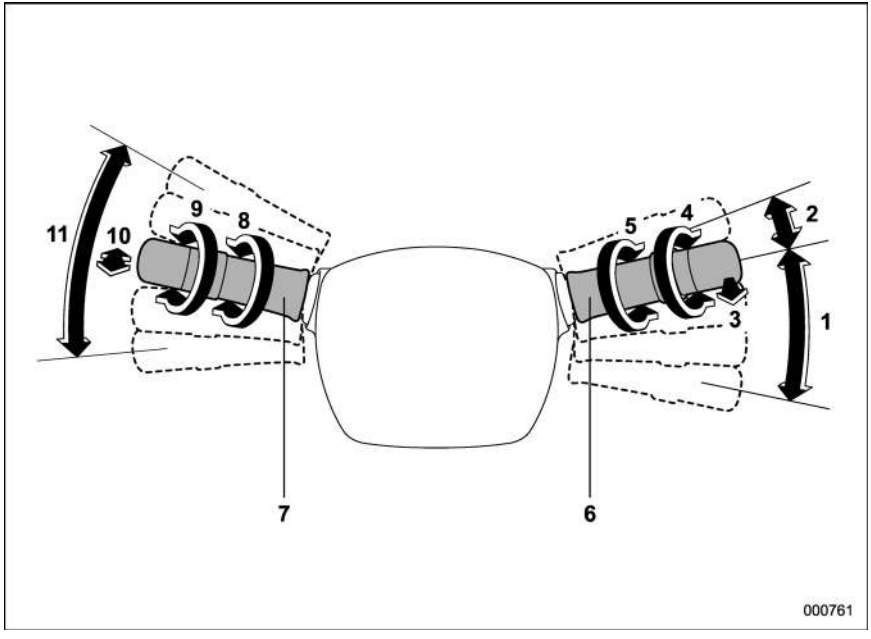

1) Windshield wiper (page 3-95)
2) Mist (page 3-96)
3) Windshield washer (page 3-97)
4) Rear window wiper and washer switch (page 3-98)
5) Wiper intermittent time control switch (page 3-97)
6) Wiper control lever (page 3-96)
7) Light control switch (page 3-88)
8) Fog light switch (page 3-93)
9) Headlight ON/OFF/AUTO (page 3-89)
10) Headlight flasher High/Low beam change (page 3-90)
11) Turn signal lever (page 3-92)

■ Combination meter

▼ U.S.-spec. models (type A)

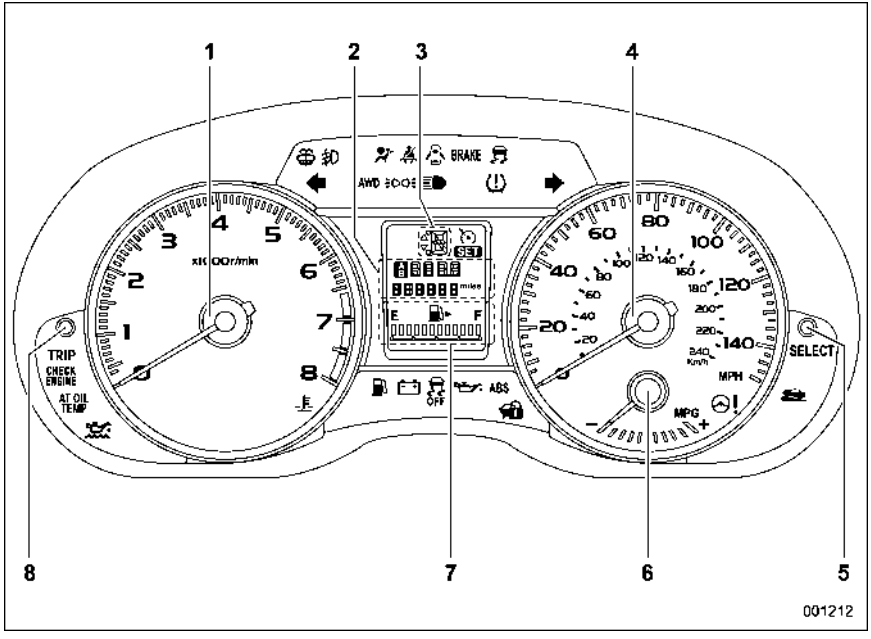

The illustration above is a typical example. For some models, the combination meter may be slightly different than that shown in the illustration.

1) Tachometer (page 3-11)
2) Trip meter and odometer (page 3-10)
3) Select lever/gear position indicator (page 3-30)
4) Speedometer (page 3-10)
5) Information display selection knob (page 3-32)
6) ECO gauge (page 3-12)
7) Fuel gauge (page 3-12)
8) Trip meter A/B selection and trip meter reset knob (page 3-10)

– CONTINUED –

▼ **U.S.-spec. models (type B)**

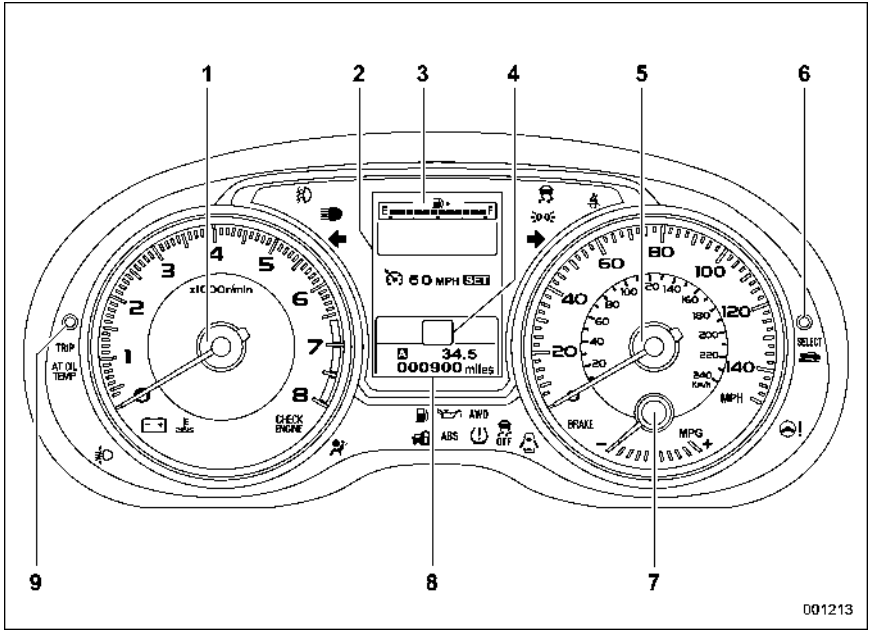

The illustration above is a typical example. For some models, the combination meter may be slightly different than that shown in the illustration.

1) Tachometer (page 3-11)
2) Multi information display (page 3-38)
3) Fuel gauge (page 3-12)
4) Select lever/gear position indicator (page 3-30)
5) Speedometer (page 3-10)
6) Information display selection knob (page 3-32)
7) ECO gauge (page 3-12)
8) Trip meter and odometer (page 3-10)
9) Trip meter A/B selection and trip meter reset knob (page 3-10)

▼ **Except U.S.-spec. models (type A)**

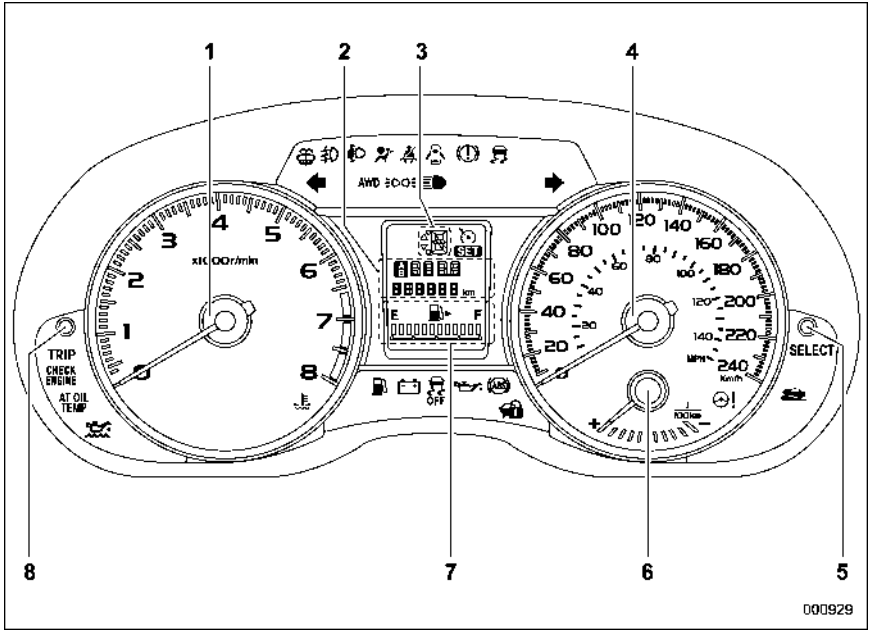

The illustration above is a typical example. For some models, the combination meter may be slightly different than that shown in the illustration.

1) Tachometer (page 3-11)
2) Trip meter and odometer (page 3-10)
3) Select lever/gear position indicator (page 3-30)
4) Speedometer (page 3-10)
5) Information display selection knob (page 3-32)
6) ECO gauge (page 3-12)
7) Fuel gauge (page 3-12)
8) Trip meter A/B selection and trip meter reset knob (page 3-10)

– CONTINUED –

▼ **Except U.S.-spec. models (type B)**

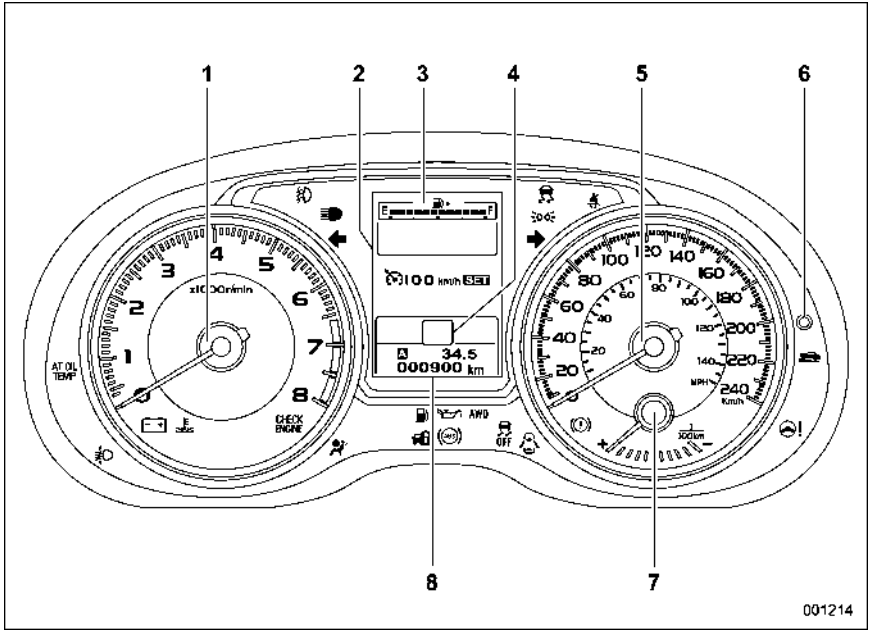

The illustration above is a typical example. For some models, the combination meter may be slightly different than that shown in the illustration.

1) Tachometer (page 3-11)
2) Multi information display (page 3-38)
3) Fuel gauge (page 3-12)
4) Select lever/gear position indicator (page 3-30)
5) Speedometer (page 3-10)
6) Trip meter A/B selection and trip meter reset knob (page 3-10)
7) ECO gauge (page 3-12)
8) Trip meter and odometer (page 3-10)

■ Warning and indicator lights

Mark	Name	Page
	Seatbelt warning light	3-14
PASSENGER	Front passenger's seatbelt warning light	3-14
	SRS airbag system warning light	3-15
ON /	Front passenger's frontal airbag ON indicator	3-16
OFF /	Front passenger's frontal airbag OFF indicator	3-16
CHECK ENGINE	CHECK ENGINE warning light/Malfunction indicator light	3-16
	Coolant temperature low indicator light/ Coolant temperature high warning light	3-17
	Charge warning light	3-18
	Oil pressure warning light	3-18
	Engine oil level warning light	3-18

Mark	Name	Page
AT OIL TEMP	AT OIL TEMP warning light (CVT models)	3-19
ABS / (ABS)	ABS warning light	3-21
BRAKE / (!)	Brake system warning light	3-21
	Door open warning light	3-23
AWD	AWD warning light (CVT models)	3-23
	Power steering warning light	3-23
	Hill start assist warning light/Hill start assist OFF indicator light	3-22
	Vehicle Dynamics Control warning light/ Vehicle Dynamics Control operation indicator light	3-24
OFF	Vehicle Dynamics Control OFF indicator light	3-25
	Turn signal indicator lights	3-31

Mark	Name	Page
	High beam indicator light	3-31
	Automatic headlight beam leveler warning light (if equipped)	3-31
	Front fog light indicator light	3-31
	Access key warning indicator (if equipped)	3-25
	Security indicator light	3-30
	Headlight indicator light	3-32
	Cruise control indicator light (if equipped)	3-31
SET	Cruise control set indicator light (if equipped)	3-31
	Low fuel warning light	3-22
	Low tire pressure warning light (U.S.-spec. models)	3-19
	Windshield washer fluid warning light	3-19

– CONTINUED –

Mark	Name	Page
SRF OFF	Steering responsive fog lights warning indicator/Steering responsive fog lights OFF indicator (models with EyeSight system)	3-32
	BSD/RCTA warning indicator (if equipped)	3-32
OFF	BSD/RCTA OFF indicator (if equipped)	3-32

Function settings

A SUBARU dealer can change the settings of the functions shown in the following table to meet your personal requirements. Contact the nearest SUBARU dealer for details. If your vehicle is equipped with a multi function display, the settings for some of these functions can be changed using the display. For details, refer to “Multi function display” ☞3-42.

Item	Function	Possible settings	Default setting
Alarm system	Alarm system	Operation/Non-operation	Operation
	Monitoring start delay time (after closure of doors)	0 seconds/30 seconds	30 seconds
	Impact sensor operation (only models with shock sensors (dealer option))	Operation/Non-operation	Non-operation
	Passive arming (models without “Keyless Access with Push-button Start system”)	Operation/Non-operation	Non-operation
	Dome light and map lights illumination (models with moonroof)	ON/OFF	OFF
	Dome light illumination (models without moonroof)		
Keyless Access (if equipped)	Hazard warning flasher	Operation/Non-operation	Operation
	Audible signal	Operation/Non-operation	Operation
	Audible signal volume	Level 1 to 7	Level 5
	Door unlock selection function (driver’s door unlock)	Driver’s door only/All doors	Driver’s door only
	Door unlock selection function (rear gate unlock)	Rear gate only/All doors	Rear gate only
Remote keyless entry system	Hazard warning flasher	Operation/Non-operation	Operation
	Audible signal	Operation/Non-operation	Operation
	Audible signal volume	Level 1 to 7	Level 5

– CONTINUED –

Item	Function	Possible settings	Default setting
Key lock-in prevention	Key lock-in prevention	Operation/Non-operation	Operation
Defogger and deicer system for models with the automatic climate control system	Rear window defogger, outside mirror defogger and windshield wiper deicer	Operation for 15 minutes/ Continuous operation	Operation for 15 minutes
Dome light	Operation of dome light/map light/ cargo area light OFF delay timer	OFF/10 seconds/20 seconds/30 seconds	30 seconds
Map light for models with a moonroof			
Cargo area light			
Battery drainage prevention function	Battery drainage prevention function	Operation/Non-operation	Operation
Seatbelt warning	Sounds a chime while driving	Operation/Non-operation	Operation
Auto on/off headlights (if equipped)	Sensitivity of the operation of the auto on/off headlights	Low/Mid/High/Max	Mid
Welcome lighting function (if equipped)	Welcome lighting function (when approaching)	OFF/30 seconds/60 seconds/90 seconds	30 seconds
	Welcome lighting function (when exiting)	OFF/30 seconds/60 seconds/90 seconds	30 seconds
Reverse gear interlocked rear wiper	Reverse gear interlocked rear wiper operation	Operation/Non-operation	U.S.-spec. models: Non-operation Other models: Operation
One-touch lane changer	Operation of the one-touch lane changer	Operation/Non-operation	Operation

Front seats 1-2
Forward and backward adjustment 1-3
Reclining the seatback 1-4
Seat height adjustment (driver's seat) 1-4
Head restraint adjustment 1-5
Seat heater (if equipped) 1-6
Safety precautions 1-6
Operation 1-7
Rear seats 1-7
Armrest (if equipped) 1-8
Head restraint adjustment 1-8
Folding down the rear seatback 1-10
Seatbelts 1-11
Seatbelt safety tips 1-11
Emergency Locking Retractor (ELR) 1-12
Automatic Locking Retractor/Emergency Locking Retractor (ALR/ELR) 1-12
Seatbelt warning light and chime 1-13
Fastening the seatbelt 1-13
Seatbelt maintenance 1-20
Front seatbelt pretensioners 1-20
Driver's seatbelt 1-20
Front passenger's seatbelt 1-22
System monitors 1-23
System servicing 1-23
Precautions against vehicle modification 1-24
Child restraint systems 1-24
Where to place a child restraint system 1-25
Choosing a child restraint system 1-27
Installing child restraint systems with ALR/ELR seatbelt 1-27
Installing a booster seat 1-31
Installation of child restraint systems by use of lower and tether anchorages (LATCH) 1-33
Top tether anchorages 1-36
*SRS airbag (Supplemental Restraint System airbag) 1-37
General precautions regarding SRS airbag system 1-38
Components 1-44
SUBARU advanced frontal airbag system 1-46
SRS side airbag and SRS curtain airbag 1-56
SRS airbag system monitors 1-63
SRS airbag system servicing 1-65
Precautions against vehicle modification 1-66

Front seats

WARNING

- **Never adjust the seat while driving to avoid loss of vehicle control and personal injury.**
- **Before adjusting the seat, make sure the hands and feet of rear seat passengers and cargo are clear of the adjusting mechanism.**
- **After adjusting the seat, push it slightly to make sure it is securely locked. If the seat is not securely locked, it may move or the seatbelt may not operate properly.**
- **Do not put objects under the front seats. They may interfere with front seat locking and cause an accident.**
- **Seatbelts provide maximum restraint when the occupant sits well back and upright in the seat. To reduce the risk of sliding under the seatbelt in a collision, the front seatbacks should be always used in the upright position while the vehicle is running. If the front seatbacks are not used in the upright position in a collision, the risk of sliding under the lap belt and of the lap belt sliding up over the abdomen will increase, and both can result in serious internal injury or death.**
- **The SRS airbags deploy with considerable speed and force. Occupants who are out of proper position when the SRS airbag deploys could suffer very serious injuries. Because the SRS airbag needs enough space for deployment, the driver should always sit upright and well back in the seat as far from the steering wheel as practical while still maintaining full vehicle control and the front passenger should move the seat as far back as possible and sit upright and well back in the seat.**

WARNING

Place children in the rear seat properly restrained at all times. The SRS airbag deploys with considerable speed and force and can injure or even kill children, especially if they are not restrained or improperly restrained. Because children are lighter and weaker than adults, their risk of being injured from deployment is greater. For that reason, we strongly recommend that ALL children (including those in child seats and those that have outgrown child restraint devices) sit in the REAR seat properly restrained at all times in a child restraint device or in a seatbelt,

whichever is appropriate for the child's age, height and weight. Secure ALL types of child restraint devices (including forward facing child seat) in the REAR seats at all times.

NEVER INSTALL A FORWARD OR REARWARD FACING CHILD SEAT IN THE FRONT SEAT. DOING SO RISKS SERIOUS INJURY OR DEATH TO THE CHILD BY PLACING THE CHILD'S HEAD TOO CLOSE TO THE SRS AIRBAG.

According to accident statistics, children are safer when properly restrained in the rear seating positions than in the front seating positions. For instructions and precautions concerning child restraint systems, refer to "Child restraint systems" ☞1-24.

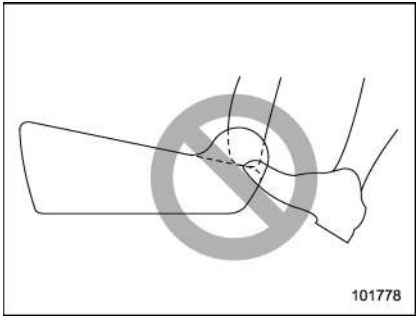

⚠ WARNING

Do not let rear passengers rest their feet between the front seatback and seat cushion. Doing so may lead to defective operation of the following systems and could result in serious injury.

- **Occupant detection system**
- **SRS side airbag**
- **Seat heater (if equipped)**

■ Forward and backward adjustment

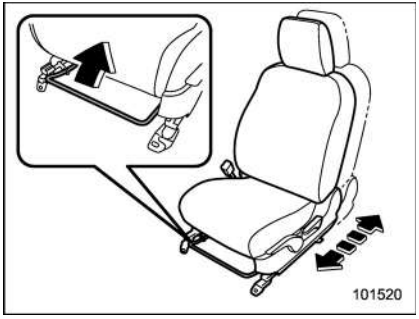

Pull the lever upward and slide the seat to the desired position. Then release the lever and try to move the seat back and forth to make sure that it is securely locked into place.

– CONTINUED –

■ Reclining the seatback

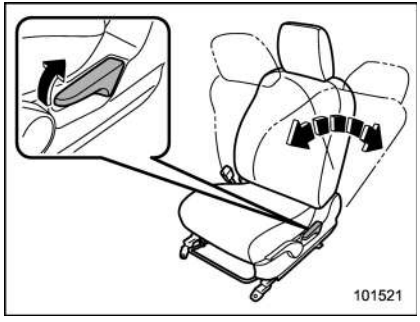

Pull the reclining lever up and adjust the seatback to the desired position. Then release the lever and make sure the seatback is securely locked into place.

The seatback placed in a reclined position can spring back upward with force when the lever is pulled. While operating the lever to return the seatback, hold the seatback lightly so that it may be raised back gradually.

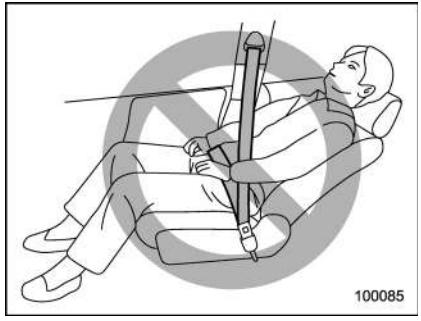

⚠ WARNING

To prevent the passenger from sliding under the seatbelt in the event of a collision, always put the seatback in the upright position while the vehicle is in motion. Also, do not place objects such as cushions between the passenger and the seatback. If you do so, the risk of sliding under the lap belt and of the lap belt sliding up over the abdomen will increase, and both can result in serious internal injury or death.

■ Seat height adjustment (driver's seat)

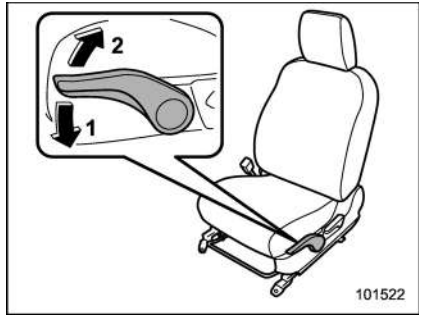

1) When the lever is pushed down, the seat is lowered.
2) When the lever is pulled up, the seat rises.

The height of the seat can be adjusted by moving the seat adjustment lever up and down.

■ Head restraint adjustment

⚠ WARNING

- **Never drive the vehicle with the head restraints removed because they are designed to reduce the risk of serious neck injury in the event that the vehicle is struck from the rear. Also, never install the head restraints the opposite way round. Doing so will prevent the head restraints from functioning as intended. Therefore, when you remove the head restraints, you must reinstall all head restraints correctly to protect vehicle occupants.**
- **All occupants, including the driver, should not operate a vehicle or sit in a vehicle's seat until the head restraints are placed in their proper positions in order to minimize the risk of neck injury in the event of a crash.**

Both the driver's seat and front passenger's seat are equipped with head restraints. Both head restraints are adjustable in the following ways.

▼ Head restraint height adjustment

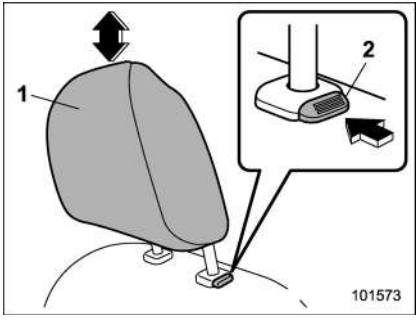

1) Head restraint
2) Release button

To raise:

Pull the head restraint up.

To lower:

Push the head restraint down while pressing the release button on the top of the seatback.

To remove:

While pressing the release button, pull out the head restraint.

To install:

Install the head restraint into the holes that are located on the top of the seatback until the head restraint locks. Press and hold the release button to lower the head restraint.

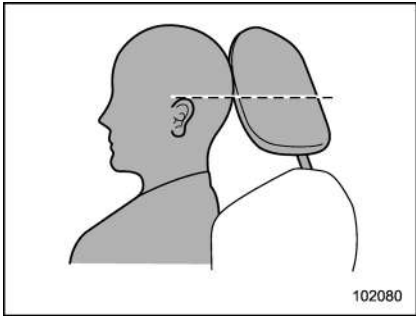

Each head restraint should be adjusted so that the center of the head restraint is closest to the top of the occupant's ears.

NOTE

When the head restraint cannot be pulled out or installed due to insufficient clearance between the head restraint and the roof, tilt the seat and then perform the installation and removal tasks.

– CONTINUED –

▼ **Head restraint angle adjustment**

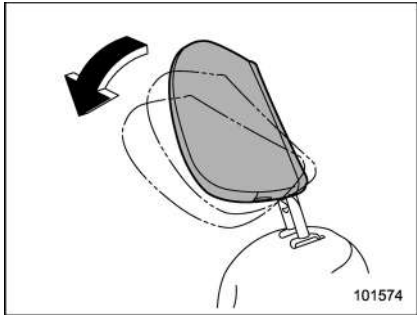

The angle of the head restraint can be adjusted in several steps. While maintaining a suitable driving posture, adjust the head restraint to a position where the back of your head is as close to the head restraint as possible.

To tilt:

Tilt the head restraint by hand to the preferred position. A click will be audible when the head restraint is locked.

To return:

Tilt the head restraint once as far forward as it can go. The head restraint will automatically return to the fully upright position. Then, adjust the head restraint again to the preferred angle.

Seat heater (if equipped)

The seat heater is equipped in the front seats.

The seat heater operates when the ignition switch is either in the “ACC” or “ON” position.

■ Safety precautions

⚠ CAUTION

- **People with delicate skin may suffer slight burns even at low temperatures if they use the seat heater for a long period of time. When using the heater, always be sure to warn the persons concerned.**
- **Do not put anything on the seat which insulates against heat, such as a blanket, cushion, or similar items. This may cause the seat heater to overheat.**
- **When the seat is warmed enough or before you leave the vehicle, be sure to turn off the seat heater.**

NOTE

Use of the seat heater for a long period of time while the engine is not running can cause battery discharge.

■ Operation

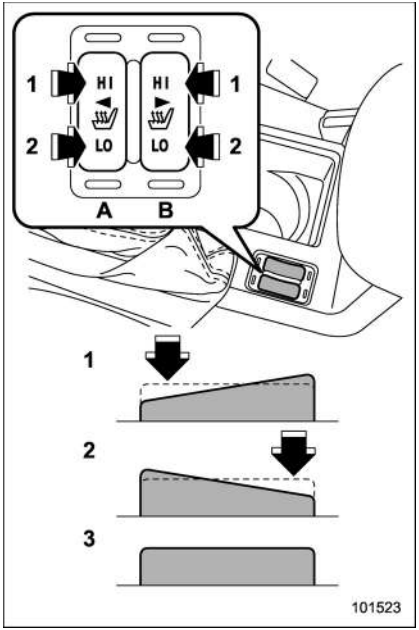

1) **HI** – Rapid heating
2) **LO** – Normal heating
3) Off
A) Left-hand side
B) Right-hand side

To turn on the seat heater, push the “LO” or “HI” position on the switch, as desired, depending on the temperature.
Selecting the “HI” position will cause the seat to heat up quicker.

To turn off the seat heater, lightly press the opposite side of the current position.

The indicator located on the switch illuminates when the seat heater is in operation.

Rear seats

⚠ WARNING

Seatbelts provide maximum restraint when the occupant sits well back and upright in the seat. Do not put cushions or any other materials between occupants and seatbacks or seat cushions. If you do so, the risk of sliding under the lap belt and of the lap belt sliding up over the abdomen will increase, and both can result in serious internal injury or death.

– CONTINUED –

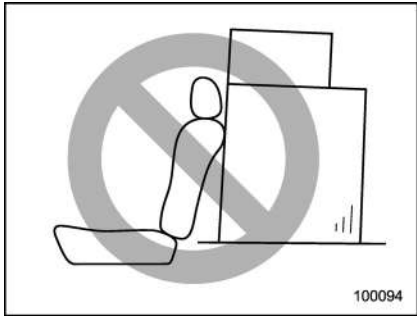

WARNING

Never stack luggage or other cargo higher than the top of the seatback because it could tumble forward and injure passengers in the event of a sudden stop or accident.

■ Armrest (if equipped)

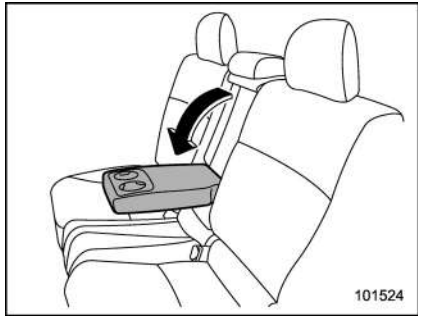

To lower the armrest, pull on the top edge of the armrest.

WARNING

To avoid serious injury, passengers must never be allowed to sit on the center armrest.

■ Head restraint adjustment

Both the rear window side seats and the rear center seat are equipped with head restraints.

WARNING

- **Never drive the vehicle with the head restraints removed because they are designed to reduce the risk of serious neck injury in the event that the vehicle is struck from the rear. Therefore, when you have removed the head restraints, you must reinstall all head restraints to protect vehicle occupants.**
- **All occupants, including the driver, should not operate a vehicle or sit in a vehicle's seat until the head restraints are placed in their proper positions in order to minimize the risk of neck injury in the event of a crash.**

▼ Rear windows side seating position

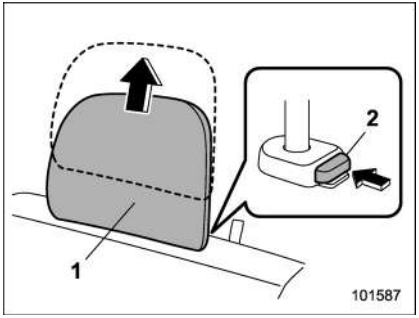

1) Head restraint
2) Release button

To remove:

While pressing the release button, pull out the head restraint.

To install:

Install the head restraint into the holes that are located on the top of the seatback until the head restraint locks. Press and hold the release button to lower the head restraint.

After installing the head restraint, make sure it is securely locked.

▼ Rear center seating position

⚠ CAUTION

The head restraint is not intended to be used at the retracted position. Before sitting on the seat, raise the head restraint to the extended position.

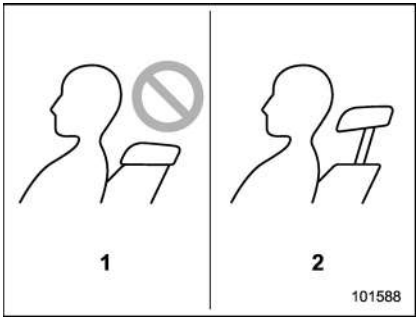

1) Incorrect (retracted position)
2) Correct (extended position)

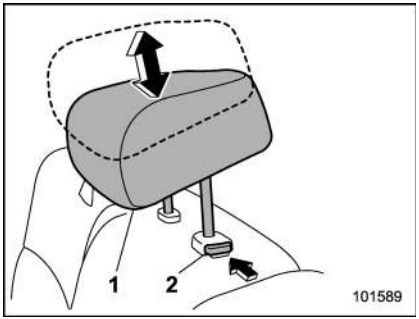

1) Head restraint
2) Release button

To raise:

Pull the head restraint up.

To lower:

Push the head restraint down while pressing the release button on the top of the seatback.

To remove:

While pressing the release button, pull out the head restraint.

To install:

Install the head restraint into the holes that are located on the top of the seatback until the head restraint locks. Press and hold the release button to lower the head restraint.

– CONTINUED –

When the rear-center seating position is occupied, raise the head restraint to the extended position. When the rear center seating position is not occupied, lower the head restraint to improve rearward visibility.

■ Folding down the rear seatback

⚠ WARNING

- **When you fold down the seatback, check that there are no passengers or objects on the rear seat. Not doing so creates a risk of injury or property damage if the seatback suddenly folds down.**
- **Never allow passengers to ride on the folded rear seatback or in the cargo area. Doing so may result in serious injury or death.**
- **Secure all objects and especially long items properly to prevent them from being thrown around inside the vehicle and causing serious injury during a sudden stop, a sudden steering maneuver or a rapid acceleration.**

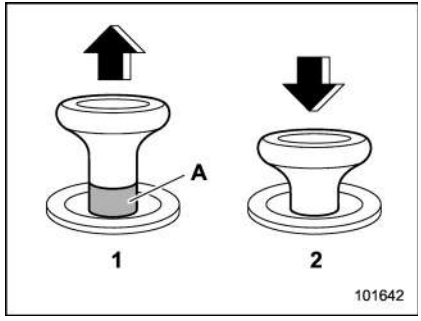

Lock release knob
1) Unlocked
2) Locked
A) Unlocking marker in red

⚠ WARNING

When you return the seatback to its original position, check that the unlocking marker on the lock release knob is not visible. Also, shake the seatback slightly to confirm that it is securely fixed in place. If the seatback is not securely fixed in place, the seatback may suddenly fold down in the event of sudden braking, or objects may move out from the cargo area, which could cause serious injury or death.

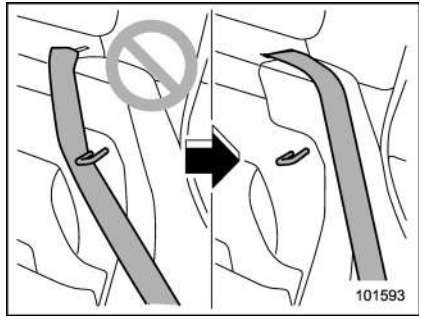

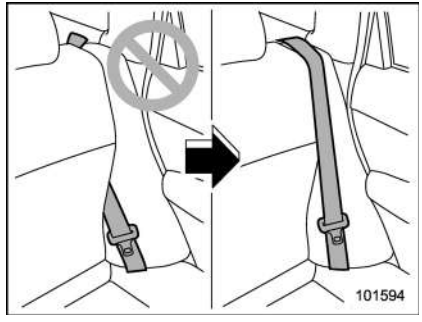

⚠ WARNING

When the seatback is returned to its original position, observe the following precautions. Failure to do so may lead to serious injury or an

accident because the operation efficiency of the seatbelt is inhibited.

- **The seatbelt should not pass behind the securing hook for the seatback.**
- **The seatbelt should not be caught in the seatback and it should be fully visible.**

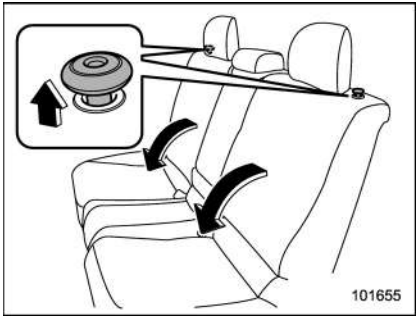

Unlock the seatback by pulling the lock release knob and then fold the seatback down.

To return the seatback to its original position, raise the seatback until it locks into place and make sure that the unlocking marker on the lock release knob is no longer visible.

Seatbelts

■ Seatbelt safety tips

⚠ WARNING

- **All persons in the vehicle should fasten their seatbelts BEFORE the vehicle starts to move. Otherwise, the possibility of serious injury becomes greater in the event of a sudden stop or accident.**
- **All belts should fit snugly in order to provide full restraint. Loose fitting belts are not as effective in preventing or reducing injury.**
- **Each seatbelt is designed to support only one person. Never use a single belt for two or more persons – even children. Otherwise, in an accident, serious injury or death could result.**
- **Replace all seatbelt assemblies including retractors and attaching hardware worn by occupants of a vehicle that has been in a serious accident. The entire assembly should be replaced even if damage is not obvious.**
- **Place children in the rear seat properly restrained at all times. The SRS airbag deploys with considerable speed and force and can injure or even kill children, especially if they are not restrained or improperly restrained. Because children are lighter and weaker than adults, their risk of being injured from deployment is greater. For that reason, we strongly recommend that ALL children (including those in child seats and those that have outgrown child restraint devices) sit in the REAR seat properly restrained at all times in a child restraint device or in a seatbelt, whichever is appropriate for the child's height and weight.**

  Secure ALL types of child restraint devices (including forward facing child seats) in the REAR seats at all times.

  NEVER INSTALL A FORWARD OR REARWARD FACING CHILD SEAT IN THE FRONT SEAT. DOING SO RISKS SERIOUS INJURY OR DEATH TO THE CHILD BY PLACING THE CHILD'S HEAD TOO CLOSE TO THE SRS AIRBAG.

– CONTINUED –

According to accident statistics, children are safer when properly restrained in the rear seating positions than in the front seating positions. For instructions and precautions concerning the child restraint system, refer to "Child restraint systems" ☞1-24.

Your vehicle is equipped with a crash sensing and diagnostic module, which will record the use of the seatbelt by the front passenger when any of the SRS frontal, side and curtain airbags deploy.

▼ **Infants or small children**

Use a child restraint system that is suitable for your vehicle. Refer to "Child restraint systems" ☞1-24.

▼ **Children**

If a child is too big for a child restraint system, the child should sit in the rear seat and be restrained using the seatbelts. According to accident statistics, children are safer when properly restrained in the rear seating positions than in the front seating positions. Never allow a child to stand up or kneel on the seat.

If the shoulder portion of the belt crosses the face or neck, move the child closer to the belt buckle to help provide a good shoulder belt fit. Care must be taken to securely place the lap belt as low as possible on the hips and not on the child's waist. If the shoulder portion of the belt cannot be properly positioned, a child restraint system should be used. Never place the shoulder belt under the child's arm or behind the child's back.

▼ **Expectant mothers**

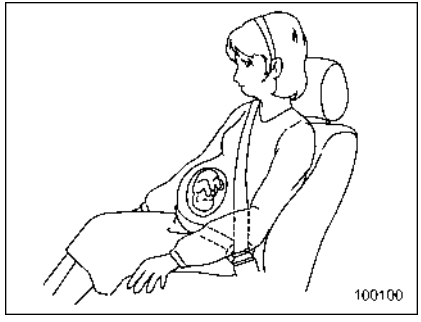

Expectant mothers also need to use the seatbelts. They should consult their doctor for specific recommendations. The lap belt should be worn securely and as low as possible over the hips, not over the waist.

■ Emergency Locking Retractor (ELR)

The driver's seatbelt has an Emergency Locking Retractor (ELR).

The emergency locking retractor allows normal body movement but the retractor locks automatically during a sudden stop, impact or if you pull the belt very quickly out of the retractor.

■ Automatic Locking Retractor/ Emergency Locking Retractor (ALR/ELR)

Each passenger's seatbelt has an Automatic Locking Retractor/Emergency Locking Retractor (ALR/ELR). The Automatic Locking Retractor/Emergency Locking Retractor normally functions as an Emergency Locking Retractor (ELR). The ALR/ELR has an additional locking mode "Automatic Locking Retractor (ALR) mode" intended to secure a child restraint system. When the seatbelt is once drawn out completely and is then retracted even slightly, the retractor locks the seatbelt in that position and the seatbelt cannot be extended. As the belt is rewinding, clicks will be heard which indicate the retractor functions as an ALR. When the seatbelt is retracted fully, the ALR mode is released.

When securing a child restraint system on

the rear seats by the use of the seatbelt, the seatbelt must be changed over to the Automatic Locking Retractor (ALR) mode.

When the child restraint system is removed, make sure that the seatbelt retracts fully and the retractor returned to the Emergency Locking Retractor (ELR) mode.

For instructions on how to convert the retractor to the ALR mode and restore it to the ELR mode, refer to “Installing child restraint systems with ALR/ELR seatbelt” ☞1-27.

■ Seatbelt warning light and chime

Refer to “Seatbelt warning light and chime” ☞3-14.

■ Fastening the seatbelt

⚠ WARNING

- **Never use a belt that is twisted or reversed. In an accident, this can increase the risk or severity of injury.**
- **Keep the lap belt as low as possible on your hips. In a collision, this spreads the force of the lap belt over stronger hip bones instead of across the weaker abdomen.**
- **Seatbelts provide maximum restraint when the occupant sits well back and upright in the seat. To reduce the risk of sliding under the seatbelt in a collision, the front seatbacks should be always used in the upright position while the vehicle is running. If the front seatbacks are not used in the upright position in a collision, the risk of sliding under the lap belt and of the lap belt sliding up over the abdomen will increase, and both can result in serious internal injury or death.**
- **Do not put cushions or any other materials between occupants and seatbacks or seat cushions. If you do so, the risk of sliding under the lap belt and of the lap belt sliding up over the abdomen will increase, and both can result in serious internal injury or death.**

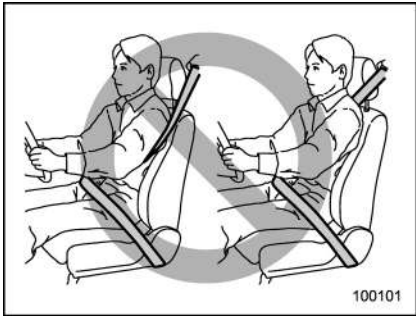

⚠ WARNING

Never place the shoulder belt under the arm or behind the back. If an accident occurs, this can increase the risk or severity of injury.

⚠ CAUTION

Metallic parts of the seatbelt can become very hot in a vehicle that has been closed up in sunny weather; they could burn an occupant. Do not touch such hot parts until they cool.

– CONTINUED –

▼ Front seatbelts

1. Adjust the seat position according to the following procedure.

Driver's seat: Adjust the seatback to the upright position. Move the seat as far from the steering wheel as practical while still maintaining full vehicle control.

Front passenger's seat: Adjust the seatback to the upright position. Move the seat as far back as possible.

2. Sit well back in the seat.
3. Pick up the tongue plate and pull the belt out slowly. Do not let it get twisted.
   - If the belt stops before reaching the buckle, return the belt slightly and pull it out more slowly.
   - If the belt still cannot be unlocked, let the belt retract slightly after giving it a strong pull, then pull it out slowly again.

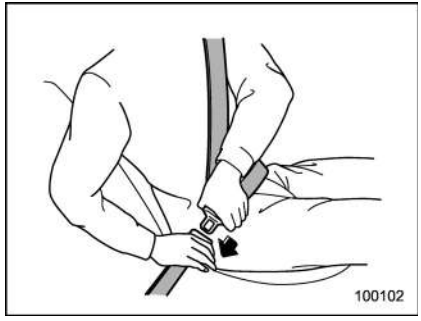

4. Insert the tongue plate into the buckle until you hear a click.

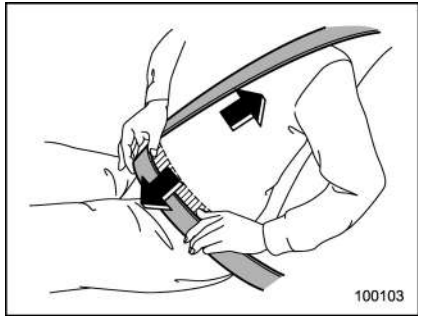

5. To make the lap part tight, pull up on the shoulder belt.
6. Place the lap belt as low as possible on your hips, not on your waist.

▽ Adjusting the front seat shoulder belt anchor height

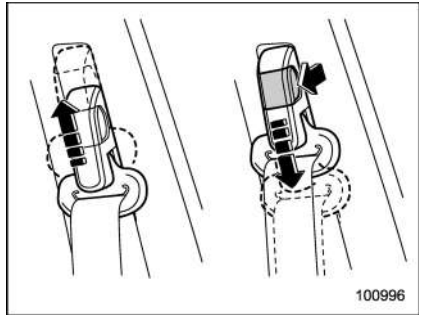

The shoulder belt anchor height should be adjusted to the position best suited for the driver/front passenger. Always adjust the anchor height so that the shoulder belt passes over the middle of the shoulder without touching the neck.

To raise:

Slide the anchor up.

To lower:

Pull the release knob and slide the anchor down.

Pull down on the anchor to make sure that it is locked in place.

⚠ WARNING

When wearing the seatbelts, make sure the shoulder portion of the webbing does not pass over your neck. If it does, adjust the seatbelt anchor to a lower position. Placing the shoulder belt over the neck may result in neck injury during sudden braking or in a collision.

▽ **Unfastening the seatbelt**

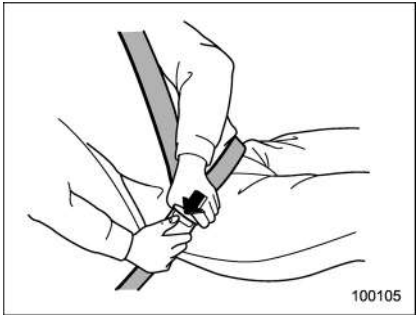

1. Push the button on the buckle.
2. Have the seatbelt retracted slowly to avoid the seatbelt being tangled or twisted.

Before closing the door, make sure that the belts are retracted properly to avoid catching the belt webbing in the door.

▼ **Rear seatbelts (except rear center seatbelt)**

1. Sit well back in the seat.
2. Pick up the tongue plate and pull the belt out slowly. Do not let it get twisted.
   - If the belt stops before reaching the buckle, return the belt slightly and pull it out more slowly.
   - If the belt still cannot be unlocked, let the belt retract slightly after giving it a strong pull, then pull it out slowly again.

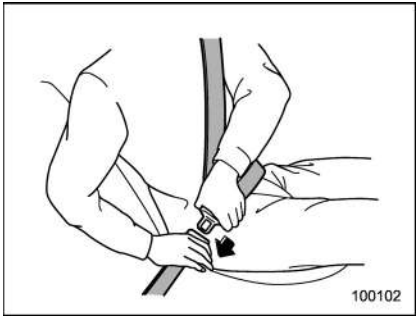

3. Insert the tongue plate into the buckle until you hear a click.

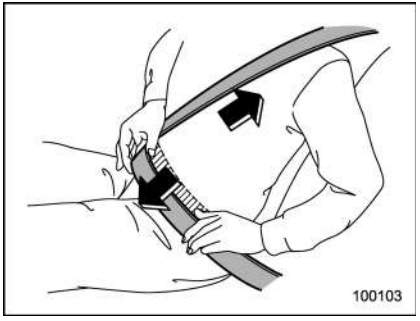

4. To make the lap part tight, pull up on the shoulder belt.
5. Place the lap belt as low as possible on your hips, not on your waist.

– CONTINUED –

▽ Unfastening the seatbelt

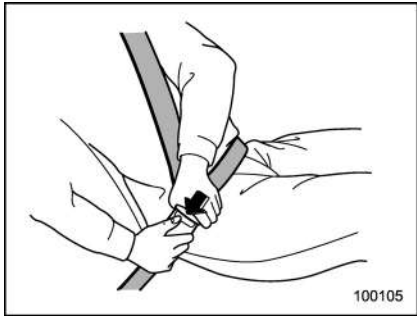

1. Push the button on the buckle.
2. Have the seatbelt retracted slowly to avoid the seatbelt being tangled or twisted.

Before closing the door, make sure that the belts are retracted properly to avoid catching the belt webbing in the door.

▼ Rear center seatbelt

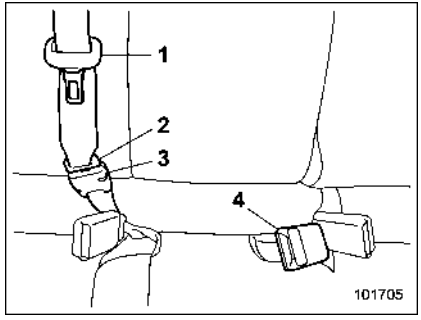

1) Center seatbelt tongue plate
2) Connector (tongue)
3) Connector (buckle)
4) Center seatbelt buckle

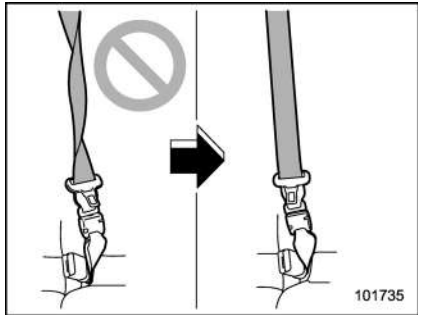

⚠ WARNING

Fastening the seatbelt with the webbing twisted can increase the risk or severity of injury in an accident. When fastening the belt after it is pulled out from the retractor, especially when inserting the connector's tongue plate into the mating buckle (on right-hand side), always check that the webbing is not twisted.

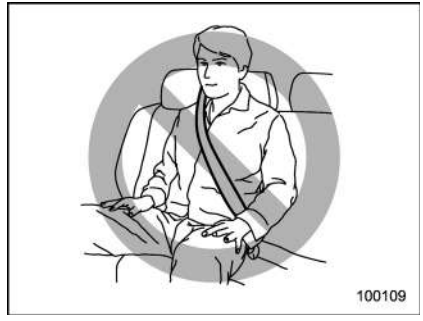

⚠ WARNING

- **Be sure to fasten both tongue plates to the respective buckles. If the seatbelt is used only as a shoulder belt (with the connector's tongue plate not fastened to the connector's buckle on the right-hand side), it cannot properly restrain the wearer in position in an accident, possibly resulting in serious injury or death.**
- **The head restraint is not intended to be used at the lowest position. Before sitting on the seat, raise the head restraint to the extended position. Otherwise, in an accident, serious injury or death could result.**

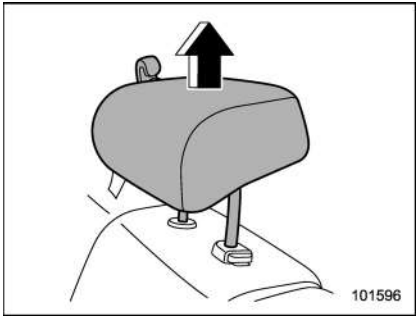

1. Raise the head restraint to the extended position. Do not remove the head restraint.

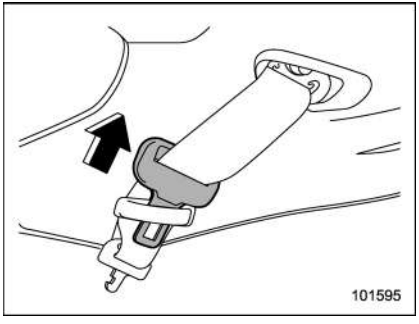

2. Remove the tongue plate from the belt holder on the right side of the cargo area and pull out the seatbelt slowly.

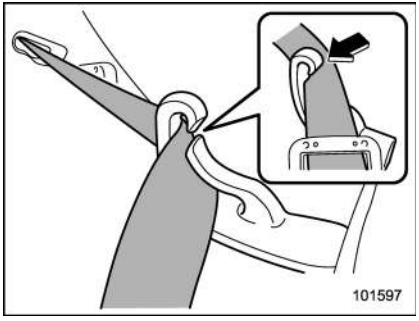

3. After drawing out the seatbelt, pass it through the belt guide as follows: First insert one edge of the belt into the open gap in the belt guide; then slide the rest of the belt in, so that the whole belt fits inside.

– CONTINUED –

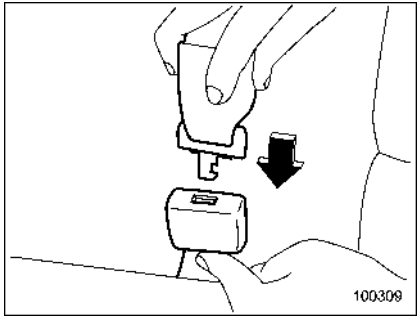

4. After confirming that the webbing is not twisted, insert the connector (tongue) attached at the webbing end into the buckle on the right-hand side until a click is heard.
   - If the belt stops before reaching the buckle, return the belt slightly and pull it out more slowly.
   - If the belt still cannot be unlocked, let the belt retract slightly after giving it a strong pull, then pull it out slowly again.

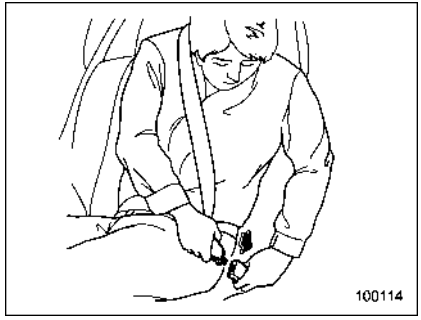

5. Insert the center seatbelt tongue plate into the center seatbelt buckle marked “CENTER” on the left-hand side until it clicks.

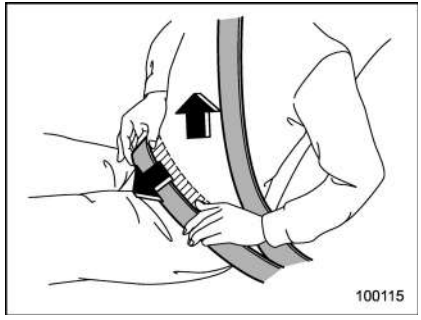

6. To make the lap part tight, pull up on the shoulder belt.

7. Place the lap belt as low as possible on your hips, not on your waist.

▽ Unfastening the seatbelt

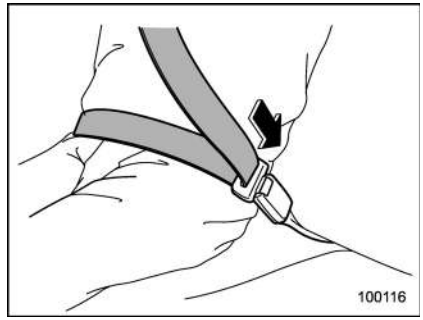

1. Push the release button of the center seatbelt buckle (on the left-hand side) to unfasten the seatbelt.

NOTE

When the seatback is folded down for greater cargo area, it is necessary to disconnect the connector.

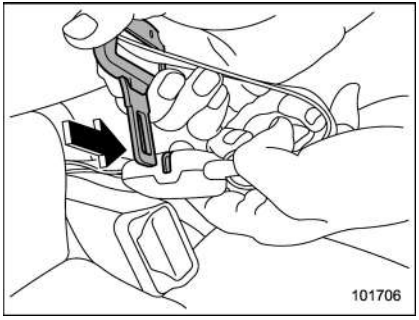

2. Insert a tongue plate or other hard pointed object into the slot in the connector (buckle) on the right-hand side and push it in. The connector (tongue) plate will then disconnect from the buckle.

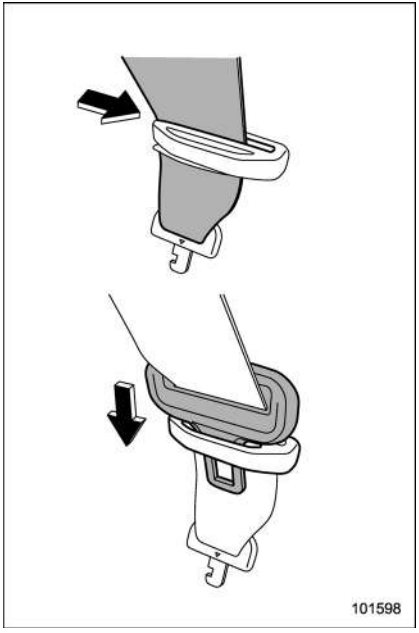

3. Allow the retractor to roll up the belt. You should hold the webbing end and guide it back into the retractor while it is rolling up. Insert the connector (tongue) into the belt holder.

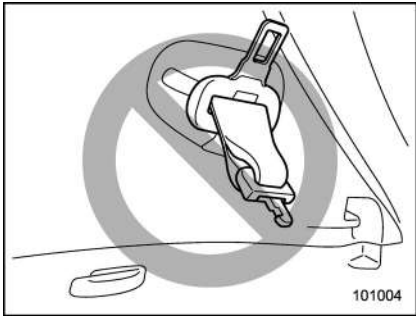

⚠ CAUTION

- **Do not allow the retractor to roll up the seatbelt too quickly. Otherwise, the metal tongue plates may hit against the trim, resulting in damaged trim.**
- **Have the seatbelt fully rolled up so that the tongue plates are neatly stored. A hanging tongue plate can swing and hit against the trim during driving, causing damage to the trim.**

– CONTINUED –

■ Seatbelt maintenance

To clean the seatbelts, use a mild soap and lukewarm water. Never bleach or dye the belts because this could seriously affect their strength.

Inspect the seatbelts and attachments including the webbing and all hardware periodically for cracks, cuts, gashes, tears, damage, loose bolts or worn areas. Replace the seatbelts even if only minor damage is found.

⚠ CAUTION

- **Keep the belts free of polishes, oils, chemicals and particularly battery acid.**
- **Never attempt to make modifications or changes that will prevent the seatbelt from operating properly.**

Front seatbelt pretensioners

The driver's and front passenger's seatbelts have a seatbelt pretensioner. The seatbelt pretensioners are designed to be activated in the event of an accident involving a moderate to severe frontal and side collision and rollover accident.

■ Driver's seatbelt

The driver's seatbelt has a shoulder belt pretensioner.

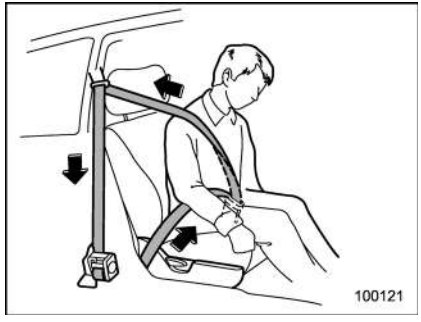

The pretensioner sensor also serves as follows.

- SRS frontal airbag sensor
- Side impact sensor
- Front door impact sensor
- Rollover sensor

If the sensor detects a certain predetermined amount of force during frontal or side collisions or rollover accidents, the front seatbelt is quickly drawn back in by the retractor to take up the slack so that the belt more effectively restrains the driver.

When a seatbelt pretensioner is activated, an operating noise will be heard and a small amount of smoke will be released. These occurrences are normal and not harmful. This smoke does not indicate a fire in the vehicle.

Once the seatbelt pretensioner has been activated, the seatbelt retractor remains locked. Consequently, the seatbelt can not be pulled out and retracted and therefore must be replaced.

NOTE

- **Seatbelt pretensioners are not designed to activate in minor impacts or in rear impacts.**
- **In the case of rollover accidents:**
  As the curtain airbags deploy, the driver's side seatbelt pretensioner and front passenger's side shoulder belt pretensioner are activated simultaneously.
- **In cases of frontal collisions, the following components will operate si-**

multaneously.

– Seatbelt pretensioner for driver
– Seatbelt pretensioner for front passenger
– SRS frontal airbag for driver
– SRS frontal airbag for front passenger*
– SRS curtain airbags (both sides) (if an offset frontal collision occurs)

*: This does not operate if the occupant detection system deactivates airbag operation. For details, refer to "Front passenger's SRS frontal airbag" ☞1-46.

- In cases of side collisions, the following components will operate simultaneously.

  – SRS curtain airbag (impacted side)
  – SRS side airbag (impacted side) (when both the satellite safing sensor and any of the center pillar impact sensors/front door impact sensors sense an impact force)
  – Seatbelt pretensioner for driver (when both the satellite safing sensor and the driver's side front door impact sensor sense an impact force)

  However, when a center pillar impact sensor detects a signal faster than the front door impact sensor, or both sensors detect signals simultaneously, the seatbelt pretensioner does not activate.

  – Seatbelt pretensioner for front passenger (shoulder belt pretensioner only) (when both the satellite safing sensor and the front passenger's side front door impact sensor sense an impact force)

  However, when a center pillar impact sensor detects a signal faster than the front door impact sensor, or both sensors detect signals simultaneously, the seatbelt pretensioner does not activate.

- Pretensioners are designed to function on a one-time-only basis. In the event that a pretensioner is activated, both the driver's and front passenger's seatbelt retractor assemblies should be replaced only by an authorized SUBARU dealer. When replacing seatbelt retractor assemblies, use only genuine SUBARU parts.
- If either front seatbelt does not retract or cannot be pulled out due to a malfunction or activation of the pretensioner, contact your SUBARU dealer as soon as possible.
- If the front seatbelt retractor assembly or surrounding area has been damaged, contact your SUBARU dealer as soon as possible.
- When you sell your vehicle, we urge you to explain to the buyer that it has seatbelt pretensioners by alerting the buyer to the contents of this section.

WARNING

- To obtain maximum protection, the occupants should sit in an upright position with their seatbelts properly fastened. Refer to "Seatbelts" ☞1-11.
- Do not modify, remove or strike the front seatbelt retractor assemblies or surrounding area. This could result in accidental activation of the seatbelt pretensioners or could make the system inoperative, possibly resulting in serious injury. Seatbelt pretensioners have no user-serviceable parts. For required servicing of front seatbelt retractors equipped with seatbelt pretensioners, consult your SUBARU dealer.
- When discarding front seatbelt retractor assemblies or scrapping the entire vehicle due to collision damage or for other reasons, consult your SUBARU

– CONTINUED –

dealer.

■ Front passenger's seatbelt

The front passenger's seatbelt has shoulder belt and lap belt pretensioner.

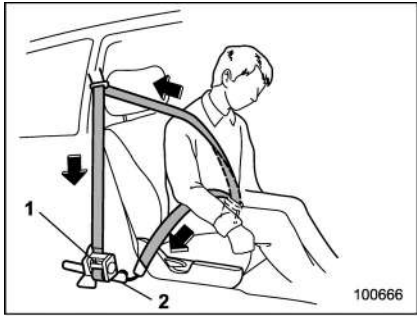

1) Seatbelt retractor assembly (shoulder belt pretensioner)
2) Lap belt pretensioner

On the front passenger's side, the shoulder belt pretensioner is supplemented by a lap belt pretensioner, which is located at the base of the center pillar. Like the shoulder belt pretensioner, the lap belt pretensioner instantaneously pulls in the belt to eliminate slack if a certain level of frontal collision force is detected. As a result, the seatbelt restrains the front seat occupant more effectively.

When a seatbelt pretensioner is activated, an operating noise will be heard and a small amount of smoke will be released. These occurrences are normal and not harmful. This smoke does not indicate a fire in the vehicle.

Once the seatbelt pretensioner has been activated, the seatbelt pretensioner remains locked. Consequently, the seatbelt cannot be pulled out and retracted and therefore must be replaced.

NOTE

- **Seatbelt pretensioners are not designed to activate in minor impacts or in rear impacts.**
- **When a rollover accident occurs, the lap belt pretensioner does not activate; however, as the curtain airbags deploy, the shoulder belt pretensioner is activated. At this time, the driver's side seatbelt pretensioner and passenger's side shoulder belt pretensioner activate simultaneously.**
- **In cases of frontal collisions, the following components will operate simultaneously.**
  - **– Seatbelt pretensioner for driver**
  - **– Seatbelt pretensioner for front passenger**
  - **– SRS frontal airbag for driver**
  - **– SRS frontal airbag for front passenger***
  - **– SRS curtain airbags (both sides) (if an offset frontal collision occurs)**

  ***: This does not operate if the occupant detection system deactivates airbag operation. For details, refer to "Front passenger's SRS frontal airbag" ☞1-46.**
- **In cases of side collisions, the following components will operate simultaneously.**
  - **– SRS curtain airbag (impacted side)**
  - **– SRS side airbag (impacted side) (when both the satellite safing sensor and any of the center pillar impact sensors/front door impact sensors sense an impact force)**
  - **– Seatbelt pretensioner for driver (when both the satellite safing sensor and the driver's side front door impact sensor sense an impact force)**

  However, when a center pillar impact sensor detects a signal faster than the front door impact sensor, or both sensors detect signals simultaneously, the seatbelt pretensioner does not activate.
  - **– Seatbelt pretensioner for front passenger (shoulder belt pretensioner only) (when both the satellite safing sensor and the front passen-**

ger's side front door impact sensor sense an impact force)

However, when a center pillar impact sensor detects a signal faster than the front door impact sensor, or both sensors detect signals simultaneously, the seatbelt pretensioner does not activate.

- **Pretensioners are designed to function on a one-time-only basis. In the event that a pretensioner is activated, both the driver's and front passenger's seatbelt retractor assemblies should be replaced only by an authorized SUBARU dealer. When replacing seatbelt retractor assemblies, use only genuine SUBARU parts.**
- **If either front seatbelt does not retract or cannot be pulled out due to a malfunction or activation of the pretensioner, contact your SUBARU dealer as soon as possible.**
- **If the front seatbelt retractor assembly or surrounding area has been damaged, contact your SUBARU dealer as soon as possible.**
- **When you sell your vehicle, we urge you to explain to the buyer that it has seatbelt pretensioners by alerting the buyer to the contents of this section.**

WARNING

- **To obtain maximum protection, the occupants should sit in an upright position with their seatbelts properly fastened. Refer to "Seatbelts" ☞1-11.**
- **Do not modify, remove or strike the front seatbelt retractor assemblies or surrounding area. This could result in accidental activation of the seatbelt pretensioners or could make the system inoperative, possibly resulting in serious injury. Seatbelt pretensioners have no user-serviceable parts. For required servicing of front seatbelt retractors equipped with seatbelt pretensioners, consult your SUBARU dealer.**
- **When discarding front seatbelt retractor assemblies or scrapping the entire vehicle due to collision damage or for other reasons, consult your SUBARU dealer.**

■ System monitors

A diagnostic system continually monitors the readiness of the seatbelt pretensioner while the vehicle is being driven. The seatbelt pretensioners share the control module with the SRS airbag system. Therefore, if any malfunction occurs in a seatbelt pretensioner, the SRS airbag system warning light will illuminate. For details, refer to "SRS airbag system monitors" ☞1-63.

■ System servicing

WARNING

- **When discarding a seatbelt retractor assembly or scrapping the entire vehicle damaged by a collision, consult your SUBARU dealer.**
- **Tampering with or disconnecting the system's wiring could result in accidental activation of the seatbelt pretensioner and/or SRS airbag or could make the system inoperative, which may result in serious injury. Do not use electrical test equipment on any circuit related to the seatbelt pretensioner and SRS airbag systems. For required servicing**

– CONTINUED –

of the seatbelt pretensioner, consult your nearest SUBARU dealer.

CAUTION

The sensors and SRS airbag control module are located in the following locations.

- **Front sub sensors: on both the right and left side at the front of the vehicle**
- **Front door impact sensors: on both front doors**
- **Satellite safing sensor: under the rear center seat**
- **SRS airbag control module (including the impact sensors and rollover sensor): under the center of the instrument panel**

If you need service or repair in those areas or near the front seatbelt retractors, have the work performed by your authorized SUBARU dealer.

NOTE

If the front or side part of the vehicle is damaged in an accident to the extent that the seatbelt pretensioner does not operate, contact your SUBARU dealer as soon as possible.

■ Precautions against vehicle modification

Always consult your SUBARU dealer if you want to install any accessory parts to your vehicle.

CAUTION

Do not perform any of the following modifications. Such modifications can interfere with proper operation of the seatbelt pretensioners.

- **Attachment of any equipment (bush bar, winches, snow plow, skid plate, etc.) other than genuine SUBARU accessory parts to the front end.**
- **Modification of the suspension system or front end structure.**
- **Installation of a tire of different size and construction from the tires specified on the vehicle placard attached to the driver's door pillar or specified for individual vehicle models in this Owner's Manual.**

Child restraint systems

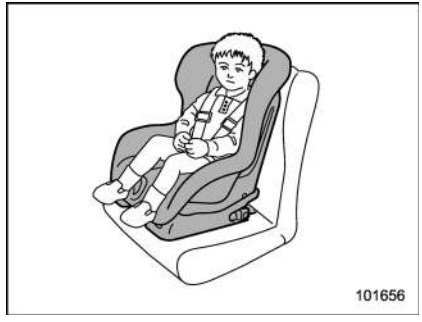

Infants and small children should always be placed in an infant or child restraint system in the rear seat while riding in the vehicle. You should use an infant or child restraint system that meets Federal Motor Vehicle Safety Standards or Canada Motor Vehicle Safety Standards, is compatible with your vehicle and is appropriate for the child's age and size. All child restraint systems are designed to be secured in vehicle seats by lap belts or the lap belt portion of a lap/shoulder belt (except those described in "Installation of child restraint systems by use of lower and tether anchorages (LATCH)" ☞1-33).

Children could be endangered in an accident if their child restraints are not

properly secured in the vehicle. When installing the child restraint system, carefully follow the manufacturer's instructions.

According to accident statistics, children are safer when properly restrained in the rear seating positions than in the front seating positions.

All U.S. states and Canadian provinces require that infants and small children be restrained in an approved child restraint system at all times while the vehicle is moving.

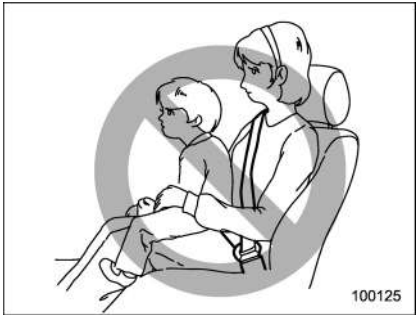

WARNING

Never let a passenger hold a child on his or her lap or in his or her arms while the vehicle is moving. The passenger cannot protect the child from injury in a collision, because the child will be caught between the passenger and objects inside the vehicle.

Additionally, holding a child in your lap or arms in the front seat exposes that child to another serious danger. Since the SRS airbag deploys with considerable speed and force, the child could be injured or even killed.

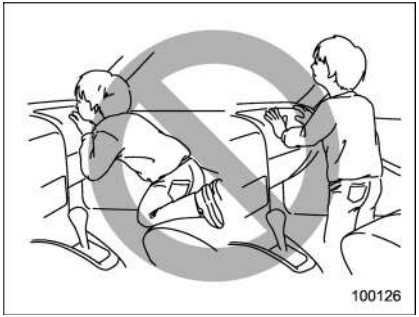

WARNING

Children should be properly restrained at all times. Never allow a child to stand up, or to kneel on any seat. Unrestrained children will be thrown forward during sudden stop or in an accident and can be injured seriously.

Additionally, children standing up or kneeling on or in front of the front seat are exposed another serious danger. Since the SRS airbag deploys with considerable speed and force, the child could be injured or even killed.

Where to place a child restraint system

The following are SUBARU's recommendations on where to place a child restraint system in your vehicle.

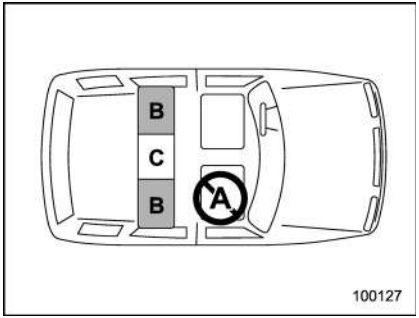

– CONTINUED –

A: Front passenger's seat

You should not install a child restraint system (including a booster seat) due to the hazard to children posed by the passenger's airbag.

B: Rear seat, window-side seating positions

Recommended positions for all types of child restraint systems.

In these positions, the following equipment is provided for installing a child restraint system.

- Automatic Locking Retractor/Emergency Locking Retractor (ALR/ELR) seatbelts
- Lower anchorages (bars)
- Upper anchorages (tether anchorages)

Some types of child restraints might not be able to be secured firmly due to projection of the seat cushion.

In this seating position, you should use only a child restraint system that has a bottom base that fits snugly against the contours of the seat cushion and can be securely retained using the seatbelt.

C: Rear seat, center seating position

The ALR/ELR seatbelt and an upper anchorage (tether anchorage) are provided in this position.

Some types of child restraints might not be able to be secured firmly due to projection of the seat cushion.

In this seating position, you should use only a child restraint system that has a bottom base that fits snugly against the contours of the seat cushion and can be securely retained using the seatbelt.

When you install a child restraint system in the rear seat's center seating position, raise the center head restraint.

Lower anchorages (bars) for window-side seating positions may be used for a seat in the center seating position if a child restraint system manufacturer's instructions permit and specify using anchors as far apart as those in this vehicle.

If a child restraint system is not correctly fixed in place (for example, if a child restraint system can be moved more than 1 inch (2.5 cm) from side to side), you should install the child restraint system in a rear seat, window-side seating position.

WARNING

- **Even with advanced airbags, children can be seriously injured by the airbag. Place children in the rear seat properly restrained at all times. The SRS airbag deploys with considerable speed and force and can injure or even kill children, especially if they are not restrained or improperly restrained. Because children are lighter and weaker than adults, their risk of being injured from deployment is greater.**

  For that reason, be sure to secure ALL types of child restraint devices (including forward facing child seats) in the REAR seats at all times. You should choose a restraint device which is appropriate for the child's age, height and weight. According to accident statistics, children are safer when properly restrained in the rear seating positions than in the front seating positions.
- **Do not use lower anchorages (bars) for a seat in the center seating position unless a child restraint system manufacturer's instructions permit and specify using anchors spaced as far apart as those in this vehicle.**
- **Do not connect two or more lower hooks onto the same anchorage (bar).**

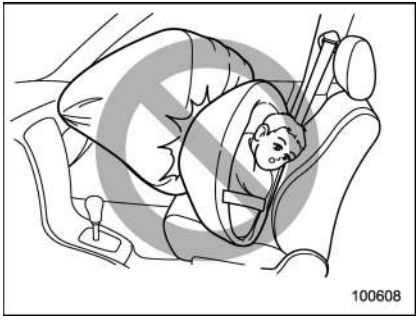

WARNING

SINCE YOUR VEHICLE IS EQUIPPED WITH A PASSENGER'S SRS AIRBAG, NEVER INSTALL A FORWARD OR REARWARD FACING CHILD SAFETY SEAT IN THE FRONT PASSENGER'S SEAT. DOING SO RISKS SERIOUS INJURY OR DEATH TO THE CHILD BY PLACING THE CHILD'S HEAD TOO CLOSE TO THE SRS AIRBAG.

Choosing a child restraint system

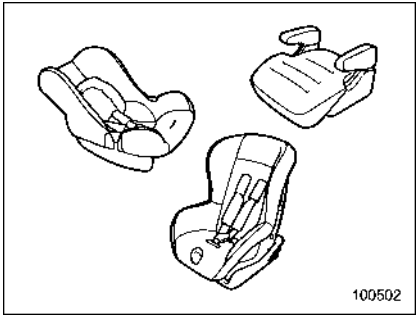

Choose a child restraint system that is appropriate for the child's age and size (weight and height) in order to provide the child with proper protection. The child restraint system should meet all applicable requirements of Federal Motor Vehicle Safety Standards for the United States or of Canada Motor Vehicle Safety Standards for Canada. It can be identified by looking for the label on the child restraint system or the manufacturer's statement of compliance in the document attached to the system.

Also it is important for you to make sure that the child restraint system is compatible with the vehicle in which it will be used.

Installing child restraint systems with ALR/ELR seatbelt

WARNING

- **Child restraint systems and seatbelts can become hot in a vehicle that has been closed up in sunny weather; they could burn a small child. Check the child restraint system before you place a child in it.**
- **Do not leave an unsecured child restraint system in your vehicle. Unsecured child restraint systems can be thrown around inside of the vehicle in a sudden stop, turn or accident; they can strike and injure vehicle occupants as well as result in serious injuries or death to the child.**

CAUTION

- **When you install a child restraint system, follow the manufacturer's instructions supplied with it. After installing the child restraint system, check to ensure that it is held securely in position. If it is not held tight and**

– CONTINUED –

secure, the danger of your child suffering personal injury in the event of an accident may be increased.

- **When installing a child restraint system in the rear center seating position, set both seatbacks to the original position. Otherwise, the child restraint system cannot be securely restrained, which may result in death or serious injuries in the event of sudden stop, sudden steering maneuver or an accident.**

▼ Installing a rearward facing child restraint

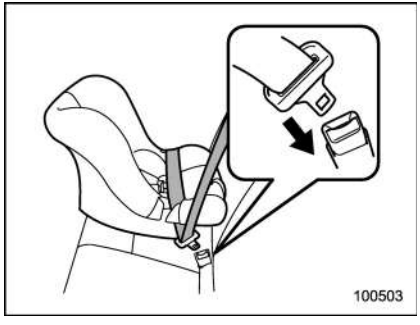

1. Place the child restraint system in the rear seating position.
2. Run the lap and shoulder belt through or around the child restraint system following the instructions provided by its manufacturer.
3. Insert the tongue plate into the buckle until you hear a click.

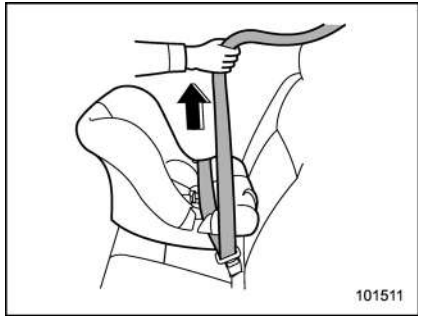

4. Take up the slack in the lap belt.
5. If using the seatbelt in the ALR mode is recommended by the manufacturer's instructions supplied with the child restraint system, perform the following procedure.

(1) Pull out the seatbelt fully from the retractor to change the retractor over from the Emergency Locking Retractor (ELR) to the Automatic Locking Retractor (ALR) mode.

(2) Allow the belt to rewind into the retractor. As the belt is rewinding, clicks will be heard which indicate the retractor functions as ALR.

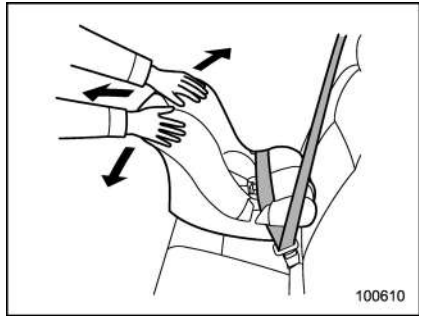

6. Push and pull the child restraint system forward and from side to side to check if it is firmly secured. Sometimes a child restraint can be more firmly secured by pushing it down into the seat cushion and then tightening the seatbelt.
7. Pull at the shoulder portion of the belt to confirm that it cannot be pulled out (ALR properly functioning).

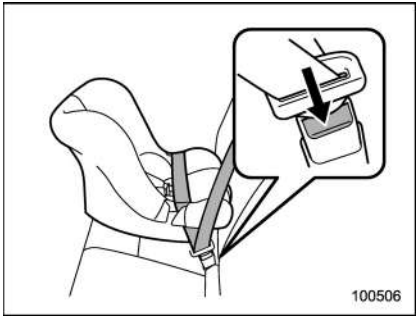

8. To remove the child restraint system, press the release button on the seatbelt buckle and allow the belt to retract completely. The belt will return to the ELR mode.

WARNING

NEVER INSTALL A FORWARD OR REARWARD FACING CHILD SEAT IN THE FRONT PASSENGER'S SEAT. DOING SO RISKS SERIOUS INJURY OR DEATH TO THE CHILD BY PLACING THE CHILD'S HEAD TOO CLOSE TO THE SRS AIRBAG.

NOTE

When the child restraint system is no longer in use, remove it and restore the ELR function of the retractor. That function is restored by allowing the seatbelt to retract fully.

▼ Installing forward facing child restraint

WARNING

Before installing a child restraint system, be sure to confirm that the seatback is securely locked into place. Otherwise, in an accident, serious injury or death could result.

1. Shake the seatback slightly to confirm that it is securely locked into place.
   – It is possible to check whether the seatback is locked visually. If the seatback is locked into place, the red colored unlocking marker which is attached to the bottom of the lock release knob is invisible. For details, refer to "Folding down the rear seatback" ☞1-10.
2. Prepare the rear seat head restraint where a child restraint system is intended to be installed in the following way.
   – When a child restraint system is installed on the **window-side seating position**, remove the rear seat head restraint. For details, refer to "Head restraint adjustment" ☞1-8.
   Store the head restraint in the cargo area. Avoid placing the head restraint in the passenger compartment to prevent it from being thrown around in the passenger compartment in a sudden stop or a sharp turn.
   – When a child restraint system is installed on the **rear center seating position**, raise the rear seat head restraint to the extended position. Do not remove the head restraint. For details, refer to "Rear center seating position" ☞1-9.
3. Place the child restraint system in the rear seating position.

WARNING

When you intend to install a child restraint system on the rear center seating position, if the child restraint system does not fit snugly against the contours of the rear center seat cushion, install the child restraint system on the window-side seating position to be safe. For details, refer to "Where to place a child restraint system" ☞1-25.

– CONTINUED –

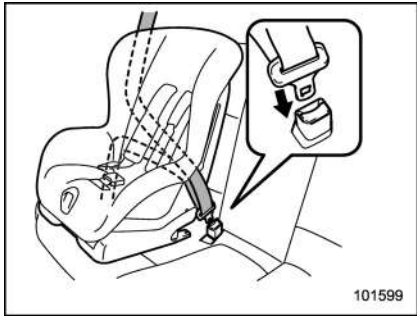

4. Run the lap and shoulder belt through or around the child restraint system following the instructions provided by its manufacturer.

– When a child restraint system is installed on the rear center seating position, pass the rear center seatbelt through the belt guide properly. For details, refer to “Rear center seatbelt” ☞1-16.

5. Insert the tongue plate into the buckle until you hear a click.

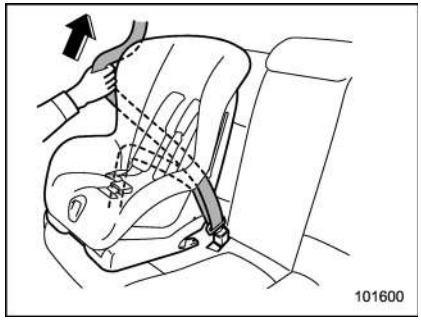

6. Take up the slack in the lap belt.

7. Pull out the seatbelt fully from the retractor to change the retractor over from the Emergency Locking Retractor (ELR) to the Automatic Locking Retractor (ALR) function. Then, allow the belt to rewind into the retractor. As the belt is rewinding, clicks will be heard which indicate the retractor functions as ALR.

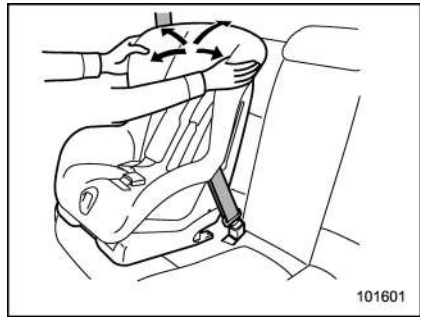

8. Before having a child sit in the child restraint system, try to move it back and forth and right and left to check if it is firmly secured. Sometimes a child restraint system can be more firmly secured by pushing it down into the seat cushion and then tightening the seatbelt.

9. Pull at the shoulder portion of the belt to confirm that it cannot be pulled out (ALR properly functioning).

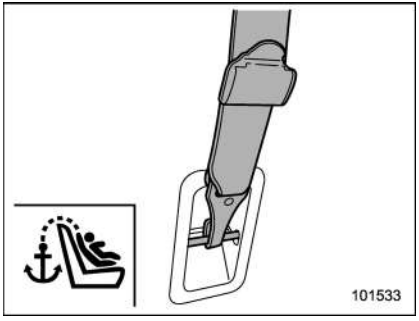

10. Latch the top tether hook onto the tether anchorage that is located behind the rear seat and tighten the top tether firmly. For additional instructions, refer to "Top tether anchorages" ☞1-36.

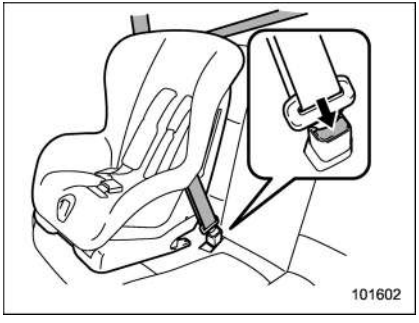

11. To remove the child restraint system, press the release button on the seatbelt buckle and allow the belt to retract completely. The belt will return to the ELR mode.

If you have installed a child restraint system for the **rear center seating position**, when you remove the child restraint system, the seatbelt may not be restored to the ELR mode even if the seatbelt is retracted. In this case, lower the head restraint to the retracted position to allow the seatbelt to retract moreover. The seatbelt will return to the ELR mode.

Remember that the head restraint is not intended to be used at the lowest position (retracted position). Therefore, when the rear center seat is occupied (including when a child restraint system is installed) next time, be sure to raise the head restraint to the extended position.

NOTE

When the child restraint system is no longer in use, remove it and restore the ELR function of the retractor. That function is restored by allowing the seatbelt to retract fully.

■ Installing a booster seat

⚠ WARNING

- **Child restraint systems and seatbelts can become hot in a vehicle that has been closed up in sunny weather; they could burn a small child. Check the child restraint system before you place a child in it.**
- **Do not leave an unsecured child restraint system in your vehicle. Unsecured child restraint systems can be thrown around inside of the vehicle in a sudden stop, turn or accident; they can strike and injure vehicle occupants as well as result in serious injuries or death to the child.**

⚠ CAUTION

When you install a child restraint system, follow the manufacturer's instructions supplied with it. After installing the child restraint system, check to ensure that it is held securely in position. If it is not held tight and secure, the danger of your child suffering personal injury in the event of an accident may be in-

– CONTINUED –

creased.

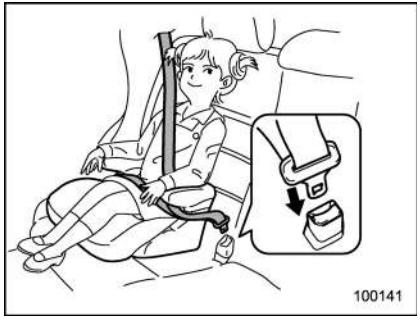

1. Place the booster seat in the rear seating position and sit the child on it. The child should sit well back on the booster seat.
2. Run the lap and shoulder belt through or around the booster seat and the child following the instructions provided by its manufacturer.
3. Insert the tongue plate into the buckle until you hear a click. Take care not to twist the seatbelt.

Make sure the shoulder belt is positioned across the center of child's shoulder and that the lap belt is positioned as low as possible on the child's hips.

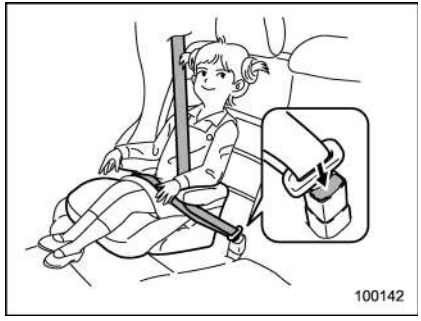

4. To remove the booster seat, press the release button on the seatbelt buckle and allow the belt to retract.

WARNING

- **Never use a belt that is twisted or reversed. In an accident, this can increase the risk or severity of injury to the child.**
- **Never place the shoulder belt under the child's arm or behind the child's back. If an accident occurs, this can increase the risk or severity of injury to the child.**
- **The seatbelt should fit snugly in order to provide full restraint. Loose fitting belts are not as effective in preventing or reducing injury.**
- **Place the lap belt as low as possible on the child's hips. A high-positioned lap belt will increase the risk of sliding under the lap belt and of the lap belt sliding up over the abdomen, and both can result in serious internal injury or death.**
- **Make sure the shoulder belt is positioned across the center of child's shoulder. Placing the shoulder belt over the neck may result in neck injury during sudden braking or in a collision.**

■ Installation of child restraint systems by use of lower and tether anchorages (LATCH)

⚠ WARNING

- **Child restraint systems and seatbelts can become hot in a vehicle that has been closed up in sunny weather; they could burn a small child. Check the child restraint system before you place a child in it.**
- **Do not leave an unsecured child restraint system in your vehicle. Unsecured child restraint systems can be thrown around inside of the vehicle in a sudden stop, turn or accident; they can strike and injure vehicle occupants as well as result in serious injuries or death to the child.**

⚠ CAUTION

When you install a child restraint system, follow the manufacturer's instructions supplied with it. After installing the child restraint system, check to ensure that it is held securely in position. If it is not held tight and secure, the danger of your child suffering personal injury in the event of an accident may be increased.

▼ Lower and tether anchorages

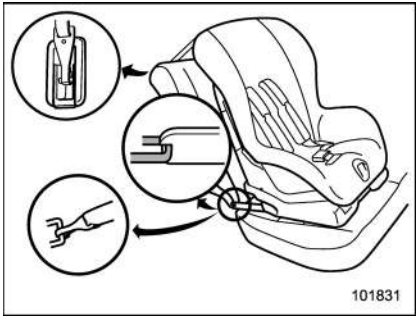

Some types of child restraint systems can be installed on the rear seat of your vehicle without use of the seatbelts. Such child restraint systems are secured to the designated anchorages provided on the vehicle body. The lower and tether anchorages are sometimes referred to as the LATCH system (**L**ower **A**nchors and **T**ethers for **CH**ildren).

Your vehicle is equipped with four lower anchorages (bars) and three upper anchorages (tether anchorages) for accommodating such child restraint systems.

▽ Lower anchorages

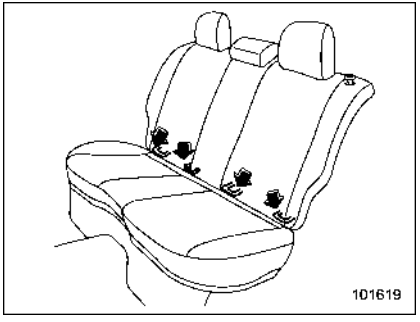

– CONTINUED –

The lower anchorages (bars) are used for installing a child restraint system only on the rear seat window-side seating positions. For each window-side seating position, two lower anchorages are provided.

Each lower anchorage is located where the seat cushion meets the seatback.

▽ **Tether anchorages**

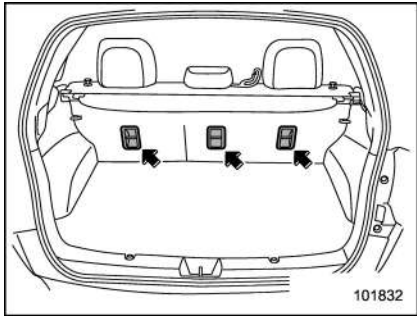

The tether anchorages (upper anchorages) are provided at the locations shown in the above illustration. For details, refer to “Top tether anchorages” ☞1-36.

▽ **To install a child restraint system using lower and tether anchorages**

To install a child restraint system using lower and tether anchorages, perform the following procedure.

⚠ WARNING

Before installing a child restraint system, be sure to confirm that the seatback is securely locked into place. Otherwise, in an accident, serious injury or death could result.

1. Shake the seatback slightly to confirm that it is securely locked into place.
   – It is possible to check whether the seatback is locked visually. If the seatback is locked into place, the red colored unlocking marker which is attached to the bottom of the lock release knob is invisible. For details, refer to “Folding down the rear seatback” ☞1-10.

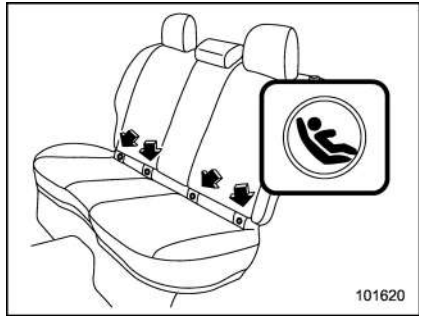

2. You will find marks “⊕” at the bottom of the rear seat seatbacks. These marks indicate the positions of the lower anchorages (bars).

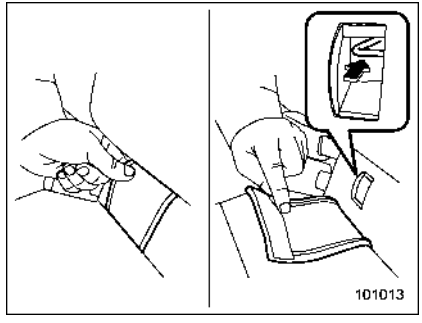

Remove the covers and locate the lower anchorages (bars).

3. Remove the rear seat head restraint. For details, refer to “Rear windows side seating position” ☞1-9.

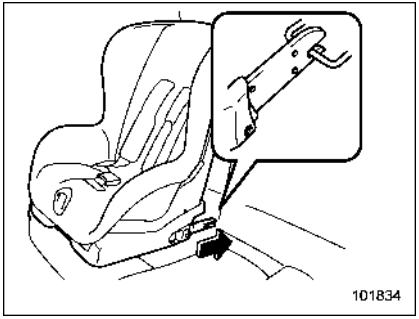

4. While following the instructions supplied by the child restraint system manufacturer, connect the lower hooks onto the lower anchorages located at “” marks on the bottom of the rear seatback. When the hooks are connected, make sure the adjacent seatbelts are not caught.

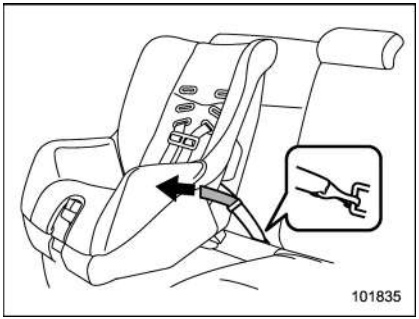

5. [If your child restraint system is of a flexible attachment type (which uses tether belts to connect the child restraint system properly to the lower anchorages)] While pushing the child restraint into the seat cushion, pull both left and right lower tether belts up to secure the child restraint system firmly by taking up the slack in the belt.

6. Latch the top tether hook onto the tether anchorage that is located behind the rear seat and tighten the top tether firmly. For additional instructions, refer to “Top tether anchorages” ☞1-36.

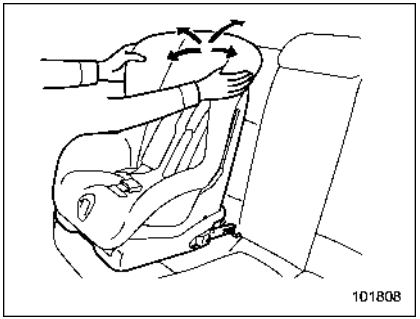

7. Before seating a child in the child restraint system, try to move it back and forth and right and left to verify that it is held securely in position.

8. To remove the child restraint system, follow the reverse procedures of installation.

If you have any question concerning this type of child restraint system, ask your SUBARU dealer.

– CONTINUED –

■ Top tether anchorages

Your vehicle is equipped with three top tether anchorages so that a child restraint system having a top tether can be installed in the rear seat. When installing a child restraint system using top tether, proceed as follows, while observing the instructions by the child restraint system manufacturer.

Since a top tether can provide additional stability by offering another connection between a child restraint system and the vehicle, we recommend that you use a top tether whenever one is required or available.

▼ Anchorage location

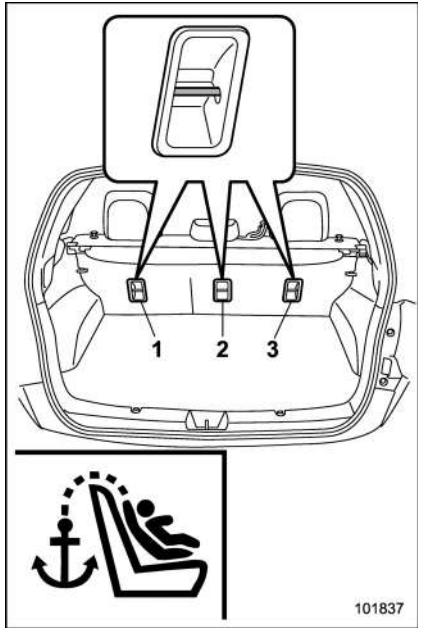

1) For left seat
2) For center seat
3) For right seat

Three upper anchorages are installed on the back side of the rear seatback.

▼ To hook the top tether

⚠ CAUTION

- **Except for the center seating position, remove the head restraint when mounting a child restraint system. Otherwise, it might be possible that the top tether cannot be fastened tightly.**
- **For the center seating position, raise the center head restraint to the extended position when mounting a child restraint system. Otherwise, it will be impossible to use the seatbelt guide that is attached to the head restraint correctly.**

  The seatbelt guide is essential for routing the belt webbing at the center seating position. For information about using the seatbelt guide, refer to "Rear center seatbelt" ☞1-16.

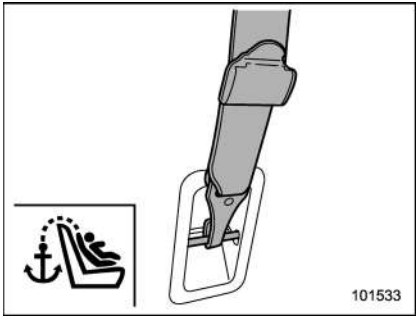

1. Attach the top tether hook to the appropriate upper anchorage.

For the center seating position, route the top tether under the head restraint as illustrated below.

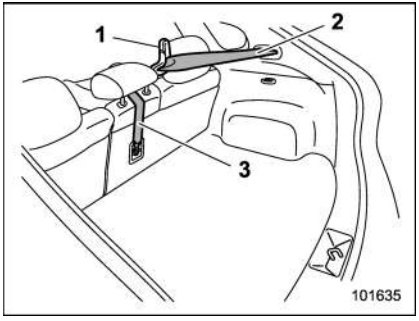

1) Seatbelt guide
2) Seatbelt of the center seating position
3) Top tether

2. Tighten the top tether securely.

Please contact your SUBARU dealer if you have any question regarding the installation of a child restraint system.

*SRS airbag (Supplemental Restraint System airbag)

*SRS: This stands for supplemental restraint system. This name is used because the airbag system supplements the vehicle's seatbelts.

Your vehicle is equipped with a supplemental restraint system in addition to a lap/shoulder belt at each front seating position and each rear window-side seating positions. The supplemental restraint system (SRS) consists of seven airbags.

The configurations are as follows.

- Driver's and front passenger's **frontal airbags**
- Driver's and front passenger's **side airbags**
- **Curtain airbags** (for driver, front passenger, and window-side rear passengers)
- **Knee airbag** for driver

These SRS airbags are designed only as a supplement to the primary protection provided by the seatbelt.

The system also controls front seatbelt pretensioners. For operation instructions and precautions concerning the seatbelt pretensioner, refer to "Front seatbelt pretensioners" ☞1-20.

– CONTINUED –

■ General precautions regarding SRS airbag system

⚠ WARNING

- **To obtain maximum protection in the event of an accident, the driver and all passengers must always wear seatbelts when in the vehicle. The SRS airbag is designed only to be a supplement to the primary protection provided by the seatbelt. It does not eliminate the need to fasten seatbelts. In combination with the seatbelts, it offers the best combined protection in case of a serious accident.**

  Not wearing a seatbelt increases the chance of severe injury or death in a crash even when the vehicle has the SRS airbag.

  For instructions and precautions concerning the seatbelt system, refer to "Seatbelts" ☞1-11.
- **The SRS side airbag and SRS curtain airbag are designed only to be a supplement to the primary protection provided by the seatbelt. They do not eliminate the need to fasten seatbelts. It is also important to wear your seatbelt to help avoid injuries that can result when an occupant is not seated in a proper upright position.**

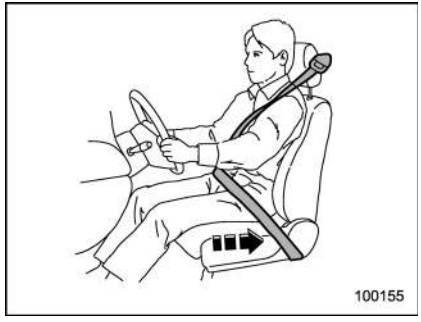

⚠ WARNING

- **The SRS airbags deploy with considerable speed and force. Occupants who are out of proper position when the SRS airbag deploys could suffer very serious injuries. Because the SRS airbag needs enough space for deployment, the driver should always sit upright and well back in the seat as far from the steering wheel as practical while still maintaining full vehicle control and the front passenger should move the seat as far back as possible and sit upright and well back in the seat.**

⚠ WARNING

- **Do not sit or lean unnecessarily close to either front door. The SRS side airbags are stored in both front seat seatbacks next to the door, and they provide protection by deploying rapidly (faster than the blink of an eye) in the event of a side impact or frontal collision. However, the force of SRS side airbag deployment may cause injuries if your head or other parts of the body are too**

close to the SRS side airbag.

- Since your vehicle is equipped with SRS curtain airbags, do not sit or lean unnecessarily close to the front or rear door on either side. Also, do not put your head, arms or hands out of the window. The SRS curtain airbags on both sides of the cabin are stored in the roof side (between the front pillar and a point behind the rear quarter glass), and they provide protection by deploying rapidly (faster than the blink of an eye) in the event of a side impact or frontal collision. The SRS curtain airbags also deploy in the event of a rollover. However, the force of its deployment may cause injuries if your head is too close to it.
- Do not sit or lean unnecessarily close to the SRS airbag. Because the SRS airbag deploys with considerable speed – faster than the blink of an eye – and force to protect in high speed collisions, the force of an airbag can injure an occupant whose body is too close to SRS airbag.

  It is also important to wear your seatbelt to help avoid injuries that can result when the SRS airbag contacts an occupant not in proper position such as one thrown forward during pre-accident braking.

  Even when properly positioned, there remains a possibility that an occupant may suffer minor injury such as abrasions and bruises to the face or arms because of the SRS airbag deployment force.

WARNING

- Do not rest your arm on either front door or its internal trim. You could be injured in the event of SRS side airbag deployment.
- Do not place any objects over or near the SRS airbag cover or between you and the SRS airbag. If the SRS airbag deploys, these objects could interfere with its proper operation and could be propelled inside the vehicle, causing injury.

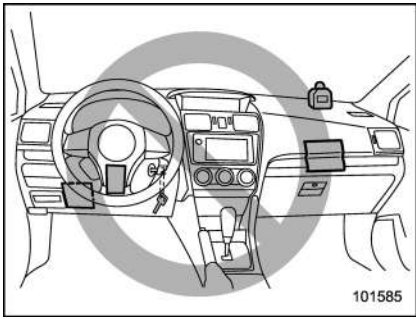

WARNING

- Do not put any objects over the steering wheel pad and dashboard. If the SRS frontal airbag deploys, these objects could interfere with its proper operation and could be propelled inside the

– CONTINUED –

vehicle, causing injury.

- Do not put any objects under the driver's side of the instrument panel. If the SRS knee airbag deploys, those objects could interfere with its proper operation and could be propelled inside the vehicle, causing injury.
- The key must not be attached to heavy, sharp or hard accessories, or another key. If the SRS knee airbag deploys, those objects could interfere with its proper operation and could be propelled inside the vehicle and cause injury.

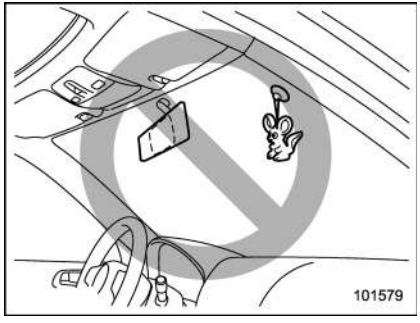

WARNING

Do not attach accessories to the windshield, or fit an extra-wide mirror over the inside rear view mirror. If the SRS airbag deploys, those objects could become projectiles that could seriously injure vehicle occupants.

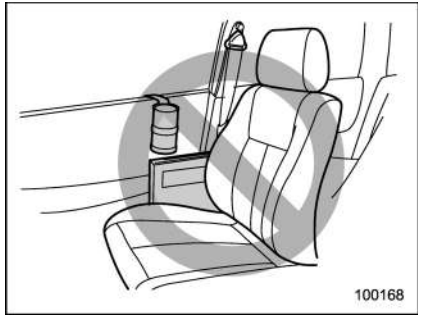

WARNING

- Do not attach accessories to the door trim or near either SRS side airbags and do not place objects near the SRS side airbags. In the event of SRS side airbag deployment, they could be propelled dangerously toward the vehicle's occupants and cause injuries.
- Do not attach a hands-free microphone or any other accessory to a front pillar, a center pillar, a rear pillar, the windshield, a side window, an assist grip, or any other cabin surface that would be near a deploying SRS curtain airbag. A hands-free microphone or other accessory in such a location could be propelled through the cabin with great force by the curtain airbag, or it could prevent correct deployment of the curtain airbag. In either case, the result could be serious injuries.

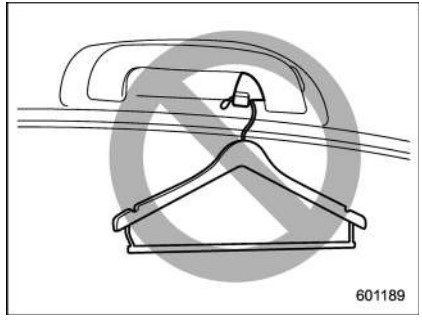

WARNING

Do not hang coat hangers or other hard or pointed objects on the coat hooks. If such items were hanging on the coat hooks during deployment of the SRS curtain airbags, they could cause serious injuries by coming off the coat hooks and being thrown through the cabin or by preventing deployment of the curtain airbags.

Before hanging clothing on the coat hooks, make sure there are no sharp objects in the pockets. Hang clothing directly on the coat hooks without using hangers.

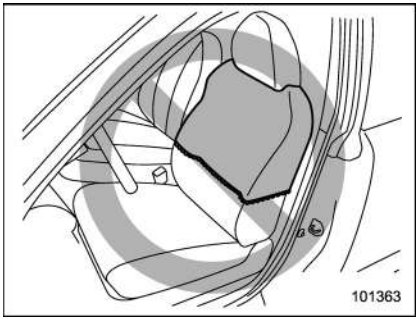

WARNING

- **Do not put any kind of clothes or other objects over either front seatback and do not attach labels or stickers to the front seat surface on or near the SRS side airbag. They could prevent proper deployment of the SRS side airbag, reducing protection available to the front seat's occupant.**
- **Do not install a seat cover unless it is designed exclusively for use with a genuine SUBARU SRS airbag. Even when using a genuine SUBARU seat cover, the SRS side airbag system may not function normally if the seat cover is not installed correctly.**

WARNING

Place children in the rear seat properly restrained at all times. The SRS airbag deploys with considerable speed and force and can injure or even kill children, especially if they are not restrained or improperly restrained. Because children are lighter and weaker than adults, their risk of being injured from deployment is greater.

For that reason, we strongly recommend that ALL children (including those in child seats and those that have outgrown child restraint devices) sit in the REAR seat properly restrained at all times in a child

– CONTINUED –

restraint device or in a seatbelt, whichever is appropriate for the child's age, height and weight.

Secure ALL types of child restraint devices (including forward facing child seats) in the REAR seats at all times.

According to accident statistics, children are safer when properly restrained in the rear seating positions than in the front seating positions.

For instructions and precautions concerning the child restraint system, refer to "Child restraint systems" ☞1-24.

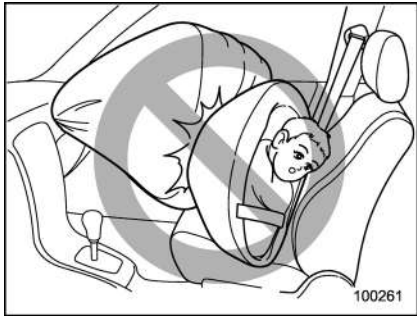

⚠ WARNING

NEVER INSTALL A FORWARD OR REARWARD FACING CHILD SEAT IN THE FRONT SEAT. DOING SO RISKS SERIOUS INJURY OR DEATH TO THE CHILD BY PLACING THE CHILD'S HEAD TOO CLOSE TO THE SRS AIRBAG.

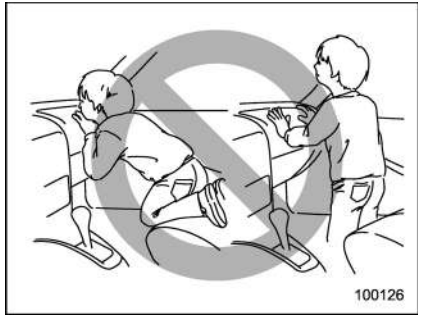

⚠ WARNING

Never allow a child to stand up or kneel on the front passenger's seat. The SRS airbag deploys with considerable force and can injure or even kill the child.

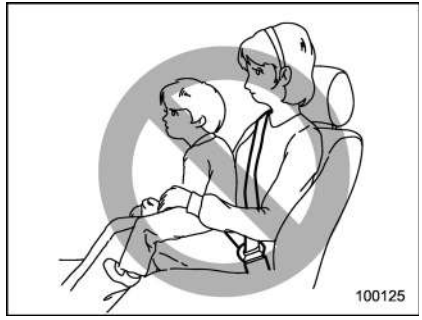

⚠ WARNING

Never hold a child on your lap or in your arms. The SRS airbag deploys with considerable force and can injure or even kill the child.

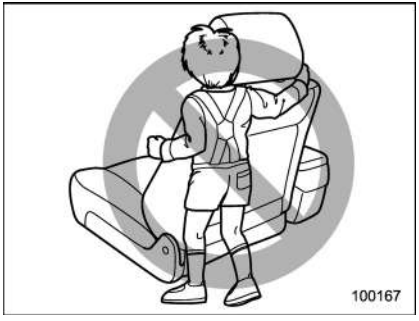

WARNING

- **Never allow a child to do the following.**
  - **Kneel on any passenger's seat facing the side window**
  - **Wrap his/her arms around the front seat seatback**
  - **Put his/her head, arms or other parts of the body out of the window**

  In the event of an accident, the force of SRS side airbag and/or SRS curtain airbag deployment could injure the child seriously because his/her head, arms or other parts of the body are too close to the SRS side airbag and/or SRS curtain airbag.
- **Since your vehicle is also equipped with a front passenger's SRS frontal airbag, children should be placed in the rear seat anyway and should be properly restrained at all times.**

CAUTION

- **When the SRS airbag deploys, some smoke will be released. This smoke could cause breathing problems for people with a history of asthma or other breathing trouble. If you or your passengers have breathing problems after SRS airbag deploys, get fresh air promptly.**
- **A deploying SRS airbag releases hot gas. Occupants could get burned if they come into direct contact with the hot gas.**

NOTE

- **When you sell your vehicle, we urge you to explain to the buyer that it is equipped with SRS airbags by alerting the buyer to the applicable section in this Owner's Manual.**
- **If the SRS airbag deploys, fuel supply will be cut off to reduce the risk of fire caused by leaking fuel. For details about restarting of the engine, refer to "If your vehicle is involved in an accident" ☞9-19.**

– CONTINUED –

■ Components

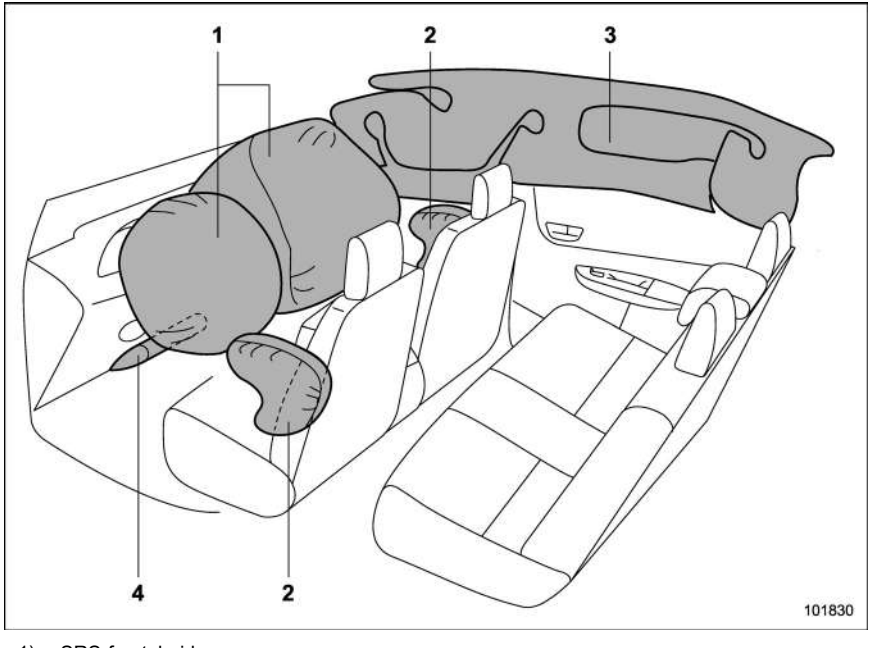

1) SRS frontal airbag
2) SRS side airbag
3) SRS curtain airbag
4) SRS knee airbag

The SRS airbags are stowed in the following locations.

Driver's SRS frontal airbag: in the center portion of the steering wheel

A "SRS AIRBAG" mark is located at the pad of the airbag.

Front passenger's SRS frontal airbag: near the top of the dashboard under the "SRS AIRBAG" mark

SRS side airbag: in the door side of each front seat seatback which bears an "SRS AIRBAG" label

SRS curtain airbag: in the roof side (between the front pillar and a point behind the rear quarter glass)

"SRS AIRBAG" marks are located at the top of each center pillar and each rear pillar.

SRS knee airbag: under the steering column

A "SRS AIRBAG" mark is located at the door of the airbag.

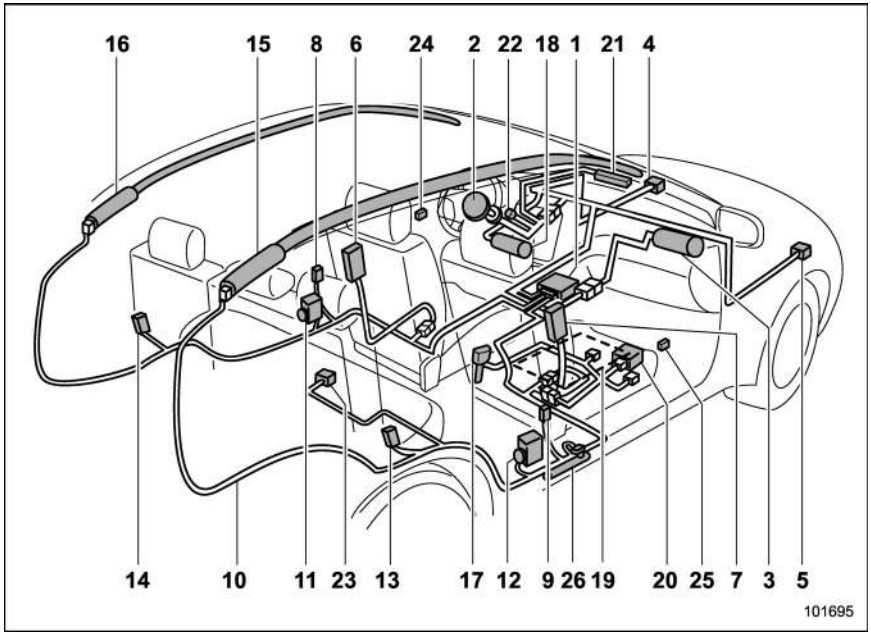

1) Airbag control module (including impact sensor and rollover sensor)
2) Frontal airbag module (driver's side)
3) Frontal airbag module (front passenger's side)
4) Front sub sensor (left-hand side)
5) Front sub sensor (right-hand side)
6) Side airbag module (driver's side)
7) Side airbag module (front passenger's side)
8) Side airbag sensor (center pillar left-hand side)
9) Side airbag sensor (center pillar right-hand side)
10) Airbag wiring
11) Seatbelt pretensioner (driver's side)
12) Seatbelt pretensioner (front passenger's side)
13) Curtain airbag sensor (rear wheel house right-hand side)
14) Curtain airbag sensor (rear wheel house left-hand side)
15) Curtain airbag module (right-hand side)
16) Curtain airbag module (left-hand side)
17) Seatbelt buckle switch (front passenger's side)
18) Knee airbag module (driver's side)
19) Front passenger's occupant detection system sensor
20) Front passenger's occupant detection control module
21) Front passenger's frontal airbag ON and OFF indicator
22) SRS airbag system warning light
23) Satellite safing sensor (under the rear center seat)
24) Front door impact sensor (left-hand side)
25) Front door impact sensor (right-hand side)
26) Lap belt pretensioner (front passenger's side)

– CONTINUED –

■ SUBARU advanced frontal airbag system

Your vehicle is equipped with a SUBARU advanced frontal airbag system that complies with the new advanced frontal airbag requirements in the amended Federal Motor Vehicle Safety Standard (FMVSS) No. 208.

The SUBARU advanced frontal airbag system automatically determines the deployment force of the driver's SRS frontal airbag at the time of deployment as well as whether or not to activate the front passenger's SRS frontal airbag and, if activated, the deployment force of the SRS frontal airbag at the time of deployment.

Your vehicle has warning labels on the driver's and front passenger's sun visors beginning with the phrase "EVEN WITH ADVANCED AIR BAGS" and a tag attached to the glove box lid beginning with the phrase "Even with Advanced Air Bags". Make sure that you carefully read the instructions on the warning labels and tag.

Always wear your seatbelt. The SUBARU advanced frontal airbag system is a supplemental restraint system and must be used in combination with a seatbelt. All occupants should wear a seatbelt or be seated in an appropriate child restraint system.

For the locations of the SRS airbags, refer to "Components" ☞1-44.

In a moderate to severe frontal collision, the following components deploy.

- SRS frontal airbag for driver
- SRS frontal airbag for front passenger
- SRS knee airbag for driver
- SRS curtain airbag*1

*1: When an offset frontal collision that is severe enough to deploy the front airbag occurs.

These components supplement the seatbelts by reducing the impact to the occupant's head, chest and knees.

▼ Driver's SRS frontal airbag

The driver's SRS frontal airbag uses a dual stage inflator. The inflator operates in different ways depending on the severity of impact.

Have the system inspected by your SUBARU dealer immediately if the SRS airbag system warning light illuminates.

NOTE

The driver's SRS side airbag and SRS curtain airbag are not controlled by the SUBARU advanced frontal airbag system.

▼ Front passenger's SRS frontal airbag

The front passenger's SRS frontal airbag uses a dual stage inflator. The inflator operates in different ways depending on the severity of impact.

The occupant detection system sensor is installed under the seat upholstery and monitors the physique and posture of the front passenger. Using this information, the occupant detection system determines whether the front passenger's SRS frontal airbag should be deployed or not.

The occupant detection system may not inflate the front passenger's SRS frontal airbag even when the driver's SRS frontal airbag deploys. This is normal. In this case, although the front passenger's SRS frontal airbag does not operate, the front passenger's seatbelt pretensioner operates with the driver's seatbelt pretensioner. For details about the seatbelt pretensioner, refer to "Front seatbelt pretensioners" ☞1-20.

⚠ CAUTION

Observe the following precautions. Failure to do so may prevent the SUBARU advanced frontal airbag system from functioning correctly or cause the system to fail.

- **Do not apply any strong impact to the front passenger's seat such as by kicking.**
- **Do not let rear passengers rest their feet between the front seatback and seat cushion.**
- **Do not spill liquid on the front passenger's seat. If liquid is spilled, wipe it off immediately.**
- **Do not remove or disassemble the front passenger's seat.**
- **Do not install any accessory (such as an audio amplifier) other than a genuine SUBARU accessory under the front passenger's seat.**
- **Do not place anything (shoes, umbrella, etc.) under the front passenger's seat.**
- **Do not use the front passenger's seat with the head restraint removed.**
- **Do not leave any articles on the front passenger's seat or the seatbelt tongue and buckle engaged when you leave your vehicle.**
- **Do not put sharp object(s) on the seat or pierce the seat upholstery.**
- **Do not place a magnet near the seatbelt buckle and the seatbelt retractor.**
- **Do not use front seats with their forward-backward position and seatback not being locked into place securely. If any of them are not locked securely, adjust them again. For adjusting procedure, refer to "Forward and backward adjustment" ☞1-3 and "Reclining the seatback" ☞1-4.**

If the seatbelt buckle switch and/or front passenger's occupant detection system have failed, the SRS airbag system warning light will illuminate. Have the system inspected by your SUBARU dealer immediately if the SRS airbag system warning light illuminates.

If your vehicle has sustained impact, this may affect the proper function of the SUBARU advanced frontal airbag system. Have your vehicle inspected at your SUBARU dealer. Do not use the front passenger's seat while driving the vehicle to your SUBARU dealer.

NOTE

The front passenger's SRS side airbag and SRS curtain airbag are not controlled by the SUBARU advanced frontal airbag system.

▼ Passenger's frontal airbag ON and OFF indicators

Refer to "Front passenger's frontal airbag ON and OFF indicators" ☞3-16.

▼ Occupant detection system

The occupant detection system sensor is installed under the seat upholstery and monitors the physique and posture of the front passenger. Using this information, the occupant detection system determines whether the front passenger's SRS frontal airbag should be deployed or not.

If the front passenger's seat cushion is wet, this may adversely affect the ability of the system to determine deployment. If the seat cushion is wet, the front passenger should stop sitting on the front passenger's seat. Wipe off liquid from the seat immediately, let the seat dry naturally and then check the SRS airbag system warning light as follows.

– CONTINUED –

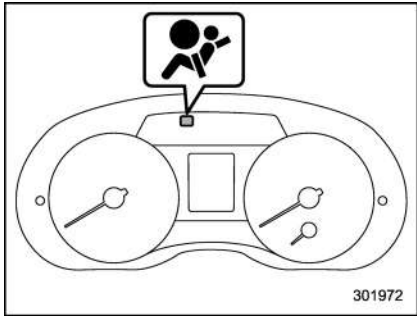

SRS airbag system warning light (type A)

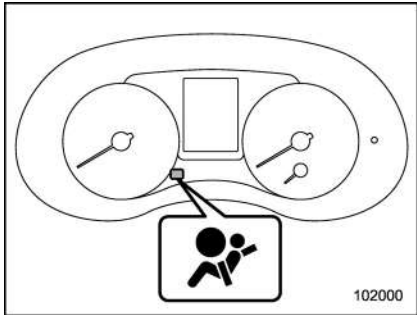

SRS airbag system warning light (type B)

- If the SRS airbag system warning light illuminates, keep the seat dry until the warning light turns off. If the SRS airbag system warning light stays on even when the seat has dried, do not allow anyone to sit on the front passenger's seat and have the system checked by your SUBARU dealer.
- If the SRS airbag system warning light does not illuminate, check that the front passenger's frontal airbag ON and OFF indicators work properly. If the indicators do not work properly, do not allow anyone to sit on the front passenger's seat and have the system checked by your SUBARU dealer.

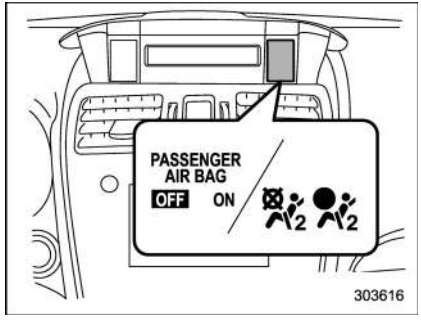

ON / : Front passenger's frontal airbag ON indicator

OFF / : Front passenger's frontal airbag OFF indicator

Also, if luggage or electronic devices are placed on the front passenger's seat, this may adversely affect the ability of the system to determine deployment. This may prevent the front passenger's frontal airbag ON and OFF indicators from working properly. Check that the indicators work properly.

When the OFF indicator turns off and the ON indicator illuminates, the front passenger's frontal airbag may deploy during a collision. Remove luggage and electronic devices from the front passenger's seat.

CAUTION

Electrical devices, such as cell phones, laptops, portable music players, or electronic games, especially when connected to the accessory power outlet and placed on the front passenger's seat or used by the person sitting in the front passenger's seat, may affect the operation of the occupant detection system. If either of the following situations occurs when using an electronic device in the vehicle, at first try to relocate that device to avoid it creating any interference.

- **The SRS airbag system warning light illuminates.**
- **The front passenger's frontal airbag ON and OFF indicators operate erratically.**

If the device continues to cause interference, the use of that device in the vehicle should be discontinued.

NOTE

This device complies with Part 18 of the FCC Rules. This device may cause interference. If this device causes interference, consult the nearest SUBARU dealer. Also, for maintenance of the system, consult the nearest SUBARU dealer. This product may cause interference to radio equipment and should not be installed near maritime safety communications equipment or other critical navigation or communication equipment operating between 0.45-30 MHz.

▼ Conditions in which front passenger's SRS frontal airbag is not activated

The front passenger's SRS frontal airbag will not be activated when any of the following conditions are met regarding the front passenger's seat:

- The seat is empty.
- The seat is equipped with an appropriate child restraint system and an infant is restrained in it. (See WARNING that follows.)
- The front passenger's occupant detection system is malfunctioning.

⚠ WARNING

NEVER INSTALL A FORWARD OR REARWARD FACING CHILD SEAT IN THE FRONT PASSENGER'S SEAT EVEN IF THE FRONT PASSENGER'S SRS FRONTAL AIRBAG IS DEACTIVATED. Be sure to install it in the REAR seat in a correct manner. Also, it is strongly recommended that any forward facing child seat or booster seat be installed in the REAR seat, and that even children who have outgrown a child restraint system be also seated in the REAR seat. This is because children sitting in the front passenger's seat may be killed or severely injured should the front passenger's SRS frontal airbag deploy. REAR seats are the safest place for children.

⚠ CAUTION

When the front passenger's seat is occupied by an infant in an appropriate child restraint system, observe the following precautions. Failure to do so may interfere with the proper operation of the occupant detection system, activating the front passenger's SRS frontal airbag even though that seat is occupied by the infant in the child restraint system.

- **Do not place any article (including electronic devices) on the seat other than the infant in the child restraint system.**
- **Do not place more than one infant in the child restraint system.**

▽ If the front passenger's frontal airbag ON indicator illuminates and the OFF indicator turns off even when an infant or a small child is in a child restraint system (including booster seat)

1. Turn the ignition switch to the "LOCK"/"OFF" position.
2. Remove the child restraint system from the seat.
3. By referring to the child restraint manufacturer's recommendations as well as the child restraint system installation procedures in "Child restraint systems" ☞1-24, correctly install the child restraint

– CONTINUED –

system.

4. Turn the ignition switch to the “ON” position and make sure that the front passenger’s frontal airbag ON indicator turns off and the OFF indicator illuminates.

If still the ON indicator remains illuminated while the OFF indicator turns off, take the following actions.

- Ensure that no article is placed on the seat other than the child restraint system and the child occupant.
- Ensure that the backward-forward position and seatback of front passenger’s seat are locked into place securely by moving the seat back and forth.

If the ON indicator still remains illuminated while the OFF indicator turns off after taking relevant corrective actions described above, relocate the child restraint system to the rear seat and immediately contact your SUBARU dealer for an inspection.

NOTE

When a child who has outgrown a child restraint system or a small adult is seated in the front passenger’s seat, the SUBARU advanced frontal airbag system may or may not activate the front passenger’s SRS frontal airbag depending on the occupant’s seating posture. Children should always wear a seatbelt when sitting in the seat irrespective of whether the airbag is deactivated or activated. If the front passenger’s SRS frontal airbag is activated (the ON indicator remains illuminated while the OFF indicator turns off), take the following action.

- **Ensure that no article is placed on the seat other than the occupant.**

If the ON indicator still remains illuminated while the OFF indicator turns off despite the fact that the actions noted above have been taken, seat the child/small adult in the rear seat and immediately contact your SUBARU dealer for an inspection. Even if the system has passed the dealer inspection, it is recommended that on subsequent trips the child/small adult always take the rear seat.

Children who have outgrown a child restraint system should always wear the seatbelt irrespective of whether the airbag is deactivated or activated.

▼ Conditions in which front passenger’s SRS frontal airbag is activated

The front passenger’s SRS frontal airbag will be activated for deployment upon impact when any of the following conditions are met regarding the front passenger’s seat.

- When the seat is occupied by an adult.
- When certain items (e.g. jug of water) are placed on the seat.

▽ If the passenger’s frontal airbag OFF indicator illuminates and the ON indicator turns off even when the front passenger’s seat is occupied by an adult

This can be caused by the adult incorrectly sitting in the front passenger’s seat.

1. Turn the ignition switch to the “LOCK”/“OFF” position.
2. Ask the front passenger to set the seatback to the upright position, sit up straight in the center of the seat cushion, correctly fasten the seatbelt, position his/her legs out forward, and adjust the seat to the rearmost position.
3. Turn the ignition switch to the “ON” position.

If the OFF indicator remains illuminated while the ON indicator remains off, take the following actions.

1. Turn the ignition switch to the “LOCK”/“OFF” position.
2. Make sure that the front passenger does not use a blanket, seat cushion, seat cover, seat heater or massager, etc.

3. If wearing excessive layers of clothing, the front passenger should remove any unnecessary items before sitting in the front passenger's seat, or should sit in a rear seat.
4. Turn the ignition switch to the "ON" position and wait 6 seconds to allow the system to complete self-checking. Following the system check, both indicators turn off for 2 seconds. Now, the ON indicator should illuminate while the OFF indicator remains off.

If the OFF indicator still remains illuminated while the ON indicator remains off, ask the occupant to move to the rear seat and immediately contact your SUBARU dealer for an inspection.

▼ **How to contact the vehicle manufacturer concerning modifications for persons with disabilities that may affect the advanced airbag system**

Changing or moving any parts of the front seats, rear seat, seatbelts, front bumper, front side frame, radiator panel, instrument panel, combination meter, steering wheel, steering column, tire, suspension or floor panel can affect the operation of the SUBARU advanced airbag system. If you have any questions, you may contact the following SUBARU distributors.

<Continental U.S., Alaska and the District of Columbia>
Subaru of America, Inc.
Customer Dealer Services Department
P.O. Box 6000
Cherry Hill, NJ 08034-6000
1-800-SUBARU3 (1-800-782-2783)

<Hawaii>
Subaru Hawaii
2850 Pukoloa Street, Suite 202,
Honolulu, HI 96819-4467
808-839-2273

<Guam>
Shen's Corporation dba Prestige Automobile
491, East Marine Corps Drive, Route 1
Dededo, Guam 96921-6225
671-633-2698

<Puerto Rico>
Trebol Motors
P.O. Box 11204, San Juan, Puerto Rico 00910
787-793-2828

<Canada>
Subaru Canada, Inc.
Consumer Support Department
560 Suffolk Court, Mississauga, Ontario L5R 4J7
1-800-894-4212

There are currently no SUBARU distributors in any other U.S. territories. If you are in such an area, please contact the SUBARU distributor or dealer from which you bought your vehicle.

– CONTINUED –

▼ Operation

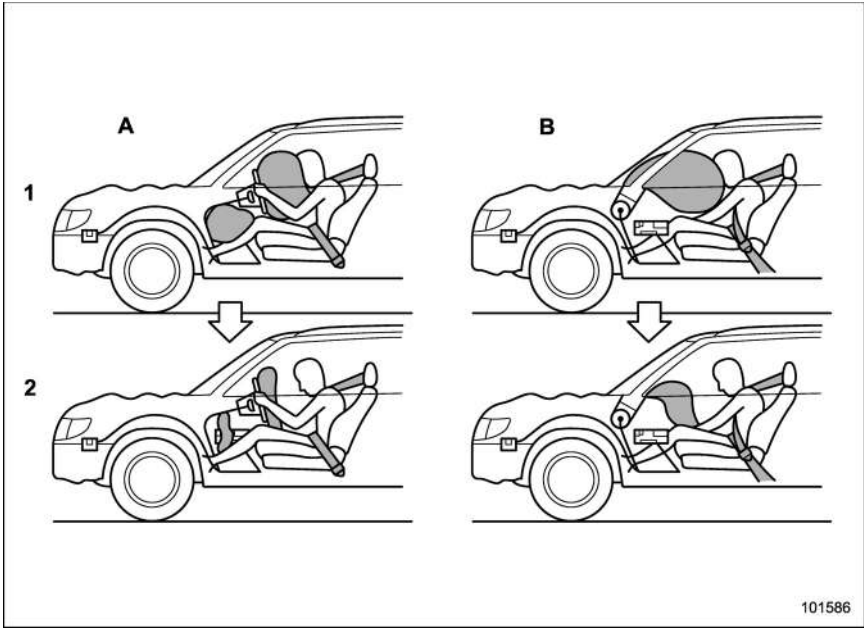

A) Driver's side
B) Passenger's side
1) SRS AIRBAGs deploy as soon as a collision occurs.
2) After deployment, SRS AIRBAGs start to deflate immediately so that the driver's vision is not obstructed.

The SRS airbags can function only when the ignition switch is in the "ON" position.

The SUBARU advanced frontal airbag system is designed to determine the activation or deactivation condition of the front passenger's SRS frontal airbag depending on the characteristic of item (s) or person on the front passenger's seat monitored by the front passenger's occupant detection system sensor. For this reason, only the driver's SRS frontal airbag may deploy in the event of a collision, but this does not mean failure of the system.

If the following sensors detect a predetermined amount of force during a frontal collision, the control module sends signals to the airbag module(s) (only driver's module or both driver's and front passenger's modules) instructing the module(s) to inflate the SRS frontal airbag(s).

- the front sub sensors
- the impact sensors in the airbag control module

On the driver's side, the SRS knee airbag also inflates with the SRS frontal airbag.

The driver's and front passenger's SRS frontal airbags use dual stage inflators. The two inflators of each airbag are triggered either sequentially or simultaneously, depending on the severity of impact, in the case of the driver's SRS frontal airbag and depending on the severity of impact and the characteristic of item(s) or person on the seat in the case of the front passenger's SRS frontal airbag.

After deployment, the SRS airbag immediately starts to deflate so that the driver's vision is not obstructed and the driver's ability to maintain control of the vehicle is not impaired. The time required from detecting impact to the deflation of the SRS airbag after deployment is shorter than the blink of an eye.

Both when only the driver's SRS frontal airbag deploys and the driver's and front passenger's SRS frontal airbags deploy, the driver's and front passenger's seatbelt pretensioners operate at the same time.

When the SRS airbag deploys, a sudden, fairly loud inflation noise will be heard and some smoke will be released. These occurrences are a normal result of the deployment. This smoke does not indicate a fire in the vehicle.

⚠ CAUTION

Do not touch the SRS airbag system components around the steering wheel and dashboard with bare hands right after deployment. Doing so can cause burns because the components can be very hot as a result of deployment.

The driver's SRS frontal airbag and front passenger's SRS frontal airbag are designed as follows.

- to deploy in the event of an accident involving a moderate to severe frontal collision
- to function on a one-time-only basis

The driver's SRS frontal airbag and front passenger's SRS frontal airbag are not designed as follows.

- to deploy in most lesser frontal impacts*1
- to deploy in most side or rear impacts or in most roll-over accidents*2

*1: Because the necessary protection can be achieved by the seatbelt alone.

*2: Because deployment of only the driver's SRS frontal airbag or both the driver's and front passenger's SRS frontal airbags would not protect the occupant in those situations.

SRS airbag deployment depends on the level of force experienced in the passenger compartment during a collision. That level differs from one type of collision to another, and it may have no bearing on the visible damage done to the vehicle itself.

– CONTINUED –

▽ **Example of accident in which the driver's/driver's and front passenger's SRS frontal airbag(s) will most likely deploy**

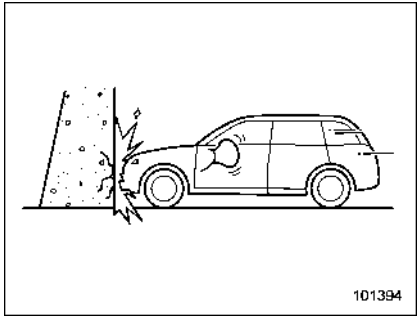

A head-on collision against a thick concrete wall at a vehicle speed of 12 to 19 mph (20 to 30 km/h) or higher activates only the driver's SRS frontal airbag or both driver's and front passenger's SRS frontal airbags. The airbag(s) will also be activated when the vehicle is exposed to a frontal impact similar in fashion and magnitude to the collision described above.

▽ **Examples of the types of accidents in which it is possible that the driver's/driver's and front passenger's SRS frontal airbag(s) will deploy**

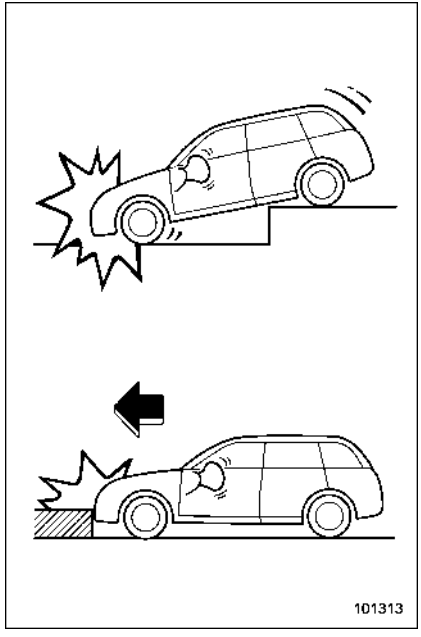

Only the driver's SRS frontal airbag or both driver's and front passenger's SRS frontal airbags may be activated when the vehicle sustains a hard impact in the undercarriage area from the road surface (such as when the vehicle plunges into a deep ditch, is severely impacted or knocked hard against an obstacle on the road such as a curb).

▽ **Examples of the types of accidents in which deployment of the driver's/driver's and front passenger's SRS frontal airbag(s) is unlikely to occur**

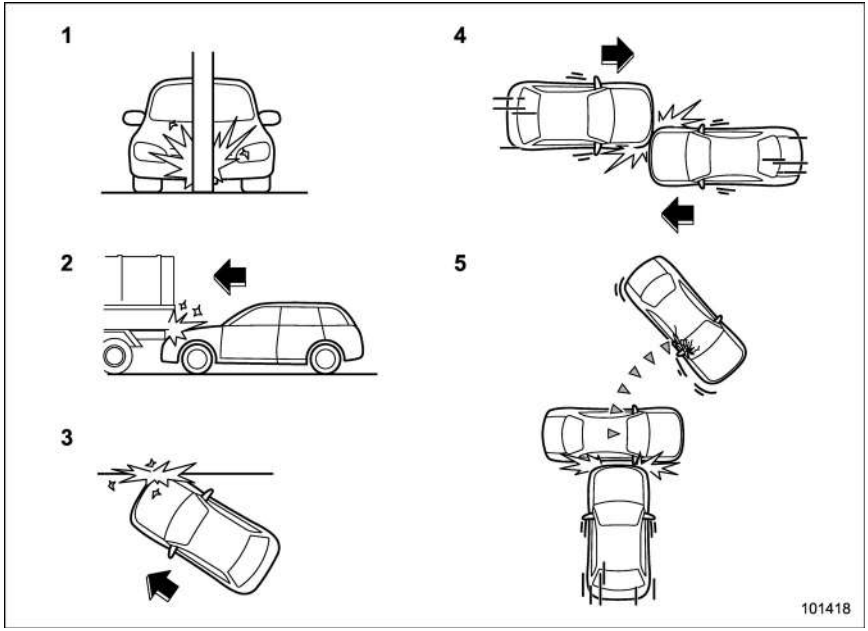

1) The vehicle strikes an object, such as a telephone pole or sign pole.
2) The vehicle slides under the load bed of a truck.
3) The vehicle sustains an oblique offset frontal impact.
4) The vehicle sustains an offset frontal collision.
5) The vehicle strikes an object that can move or deform, such as a parked vehicle.

There are many types of collisions which might not necessarily require deployment of driver's/driver's and front passenger's SRS frontal airbag(s). In the event of accidents like those illustrated, the driver's/driver's and front passenger's SRS frontal airbag(s) may not deploy depending on the level of accident forces involved.

– CONTINUED –

▽ **Examples of the types of accidents in which the driver's/driver's and front passenger's SRS frontal airbag(s) are not designed to deploy in most cases**

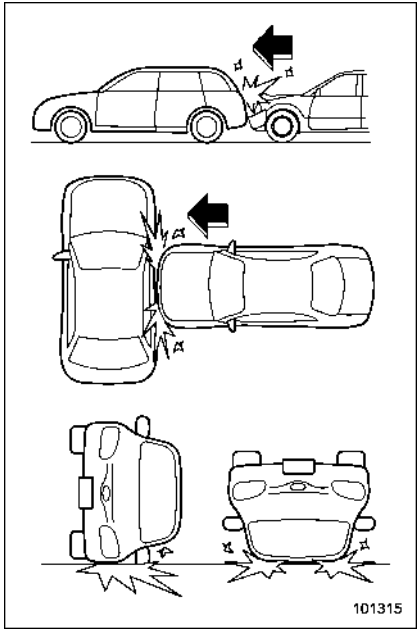

The driver's and front passenger's SRS frontal airbags are not designed to deploy in most of the following cases.

- If the vehicle is struck from the side or from behind
- If the vehicle rolls onto its side or roof
- If the vehicle is involved in a low-speed frontal collision

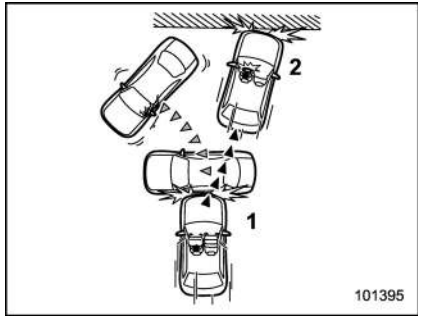

1) First impact
2) Second impact

In an accident where the vehicle is impacted more than once, the driver's and/or front passenger's SRS frontal airbag(s) will deploy only once on the first impact.

Example: In the case of a double collision, first with another vehicle, then against a concrete wall in immediate succession, once either or both of the driver's and front passenger's SRS frontal airbags is/are activated on the first impact, it/they will not be activated on the second impact.

■ SRS side airbag and SRS curtain airbag

The SRS side airbag is stored in the door side of each front seat seatback, which bears an "SRS AIRBAG" label.

In a moderate to severe side impact collision, the SRS side airbag on the impacted side of the vehicle deploys between the occupant and the door panel and supplements the seatbelt by reducing the impact on the occupant's chest and waist. The SRS side airbag operates only for front seat occupants.

The SRS curtain airbag on each side of

the cabin is stored in the roof side (between the front pillar and a point over the rear seat). An “SRS AIRBAG” mark is located at the top of each center pillar.

In a moderate to severe side impact collision, the SRS curtain airbag on the impacted side of the vehicle deploys between the occupant and the side window and supplements the seatbelt by reducing the impact on the occupant’s head.

In a rollover, SRS curtain airbags on both sides of the vehicle deploy between the occupant and the side window and supplement the seatbelt by reducing the impact to the occupant’s head.

In an offset frontal collision, SRS curtain airbags on both sides of the vehicle deploy between the occupant and the side window and supplement the seatbelt by reducing the impact to the occupant’s head and chest.

▼ Operation

The SRS side airbag and SRS curtain airbag can function only when the ignition switch is in the “ON” position.

The following airbags deploy independently of each other since each has its own impact sensor.

- Driver’s SRS side airbag
- Front passenger’s SRS side airbag
- SRS curtain airbag (right-hand side)
- SRS curtain airbag (left-hand side)

Therefore, they may not both deploy in the same accident. Also, the SRS side airbag and SRS curtain airbag deploys independently of the driver’s and front passenger’s SRS frontal airbags in the steering wheel and instrument panel.

An impact sensor, which senses impact force, is located in each of the following locations.

- In the left and right front doors
- In the left and right center pillars
- In the left and right rear wheel houses
- Under the rear center seat

A rollover sensor is also located inside the airbag control module.

If both of the following sensors together sense an impact force above a predetermined level in a side collision, the control module causes **both the SRS side airbag and curtain airbag on the impacted side** to inflate regardless of whether the rear wheel house impact sensor on the same side senses an impact.

- the impact sensor that is located under the rear center seat
- one of the center pillar impact sensors or front door impact sensors

If both of the following sensors together sense an impact force above a predetermined level in a side collision, the control module causes **only the SRS curtain airbag on the impacted side** to inflate.

- the impact sensor that is located under the rear center seat
- one of the rear wheel house impact sensors

If the rollover sensor detects rollover of the vehicle, the control module inflates the **SRS curtain airbags on both sides**. At this time, the driver’s and front passenger’s seatbelt pretensioners also operate at the same time.

After the deployment, the SRS side airbag immediately starts to deflate. The time required from detection of an impact to deflation of an SRS side airbag after deployment is shorter than the blink of an eye.

The SRS curtain airbag remains inflated for a while following deployment then slowly deflates.

The SRS side airbag and SRS curtain airbag deploy even when no one occupies the seat on the side on which an impact is applied.

– CONTINUED –

When the SRS side airbag and SRS curtain airbag deploy, a sudden, fairly loud inflation noise will be heard and some smoke will be released. These occurrences are a normal result of the deployment. This smoke does not indicate a fire in the vehicle.

⚠ CAUTION

Do not touch the SRS side airbag system components around the front seat seatback with bare hands right after deployment. Doing so can cause burns because the components can be very hot as a result of deployment.

After deployment, do not touch any part of the SRS curtain airbag system (from the front pillar to the part of the roof side over the rear seat). Doing so can cause burns because the components can be very hot as a result of deployment.

The SRS side airbag and SRS curtain airbag are designed as follows:

- to deploy in the event of an accident involving a moderate to severe side impact collision
- to function on a one-time-only basis.

The SRS side airbag and SRS curtain airbag are not designed to deploy in the following cases:

- in most lesser side impact
- in most frontal or most rear impacts (because the SRS side airbag and SRS curtain airbag deployment would not protect the occupant in those situations)

The SRS curtain airbags are also designed to deploy when the vehicle is in an extremely inclined state such as during a rollover. They are not designed to deploy in most lesser inclined state.

SRS side airbag and SRS curtain airbag deployment depend on the level of force experienced in the passenger compartment during a side impact collision. That level differs from one type of collision to another, and it may have no bearing on the visible damage done to the vehicle itself.

▽ **Example of the type of accident in which the SRS side airbag will most likely deploy.**

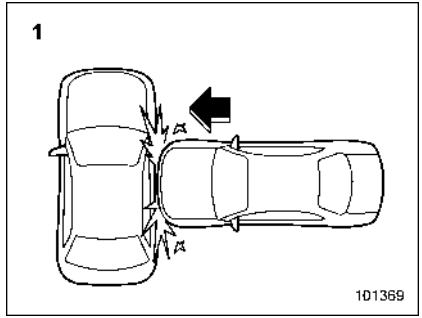

1) A severe side impact near the front seat.

▽ **Examples of the types of accidents in which the SRS curtain airbag will most likely deploy.**

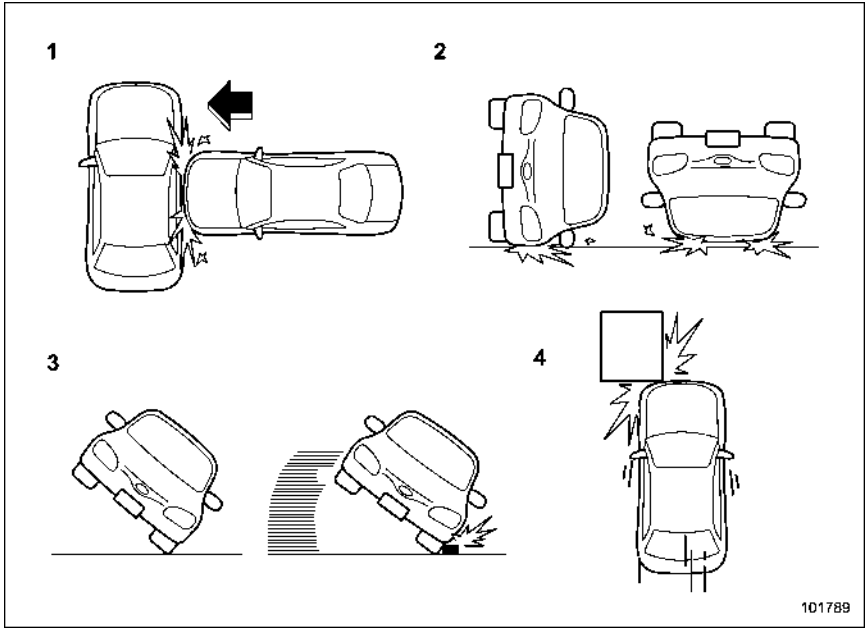

1) The vehicle is involved in a severe side impact near the front seat or the rear seat.
2) The vehicle rolls onto its side or the roof.
3) The angle of vehicle tip-up is marginal or the skidding vehicle's tires hit a curb-stone laterally.
4) An offset frontal collision that is severe enough to deploy the front airbag.

– CONTINUED –

▽ **Examples of the types of accidents in which it is possible that the SRS side airbag and the SRS curtain airbag will deploy.**

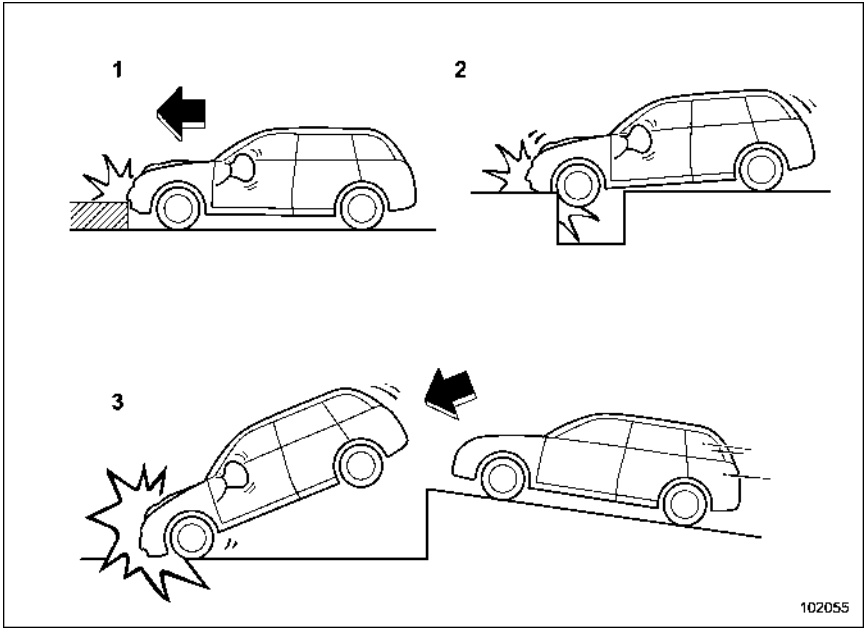

1) Hitting a curb, edge of pavement or hard surface
2) Falling into or jumping over a deep hole
3) Landing hard or vehicle falling

It is possible that the SRS side and curtain airbags will deploy if a serious impact occurs to the underside of your vehicle. Some examples are shown in the illustration.

▽ **Examples of the types of accidents in which the SRS side airbag is unlikely to deploy.**

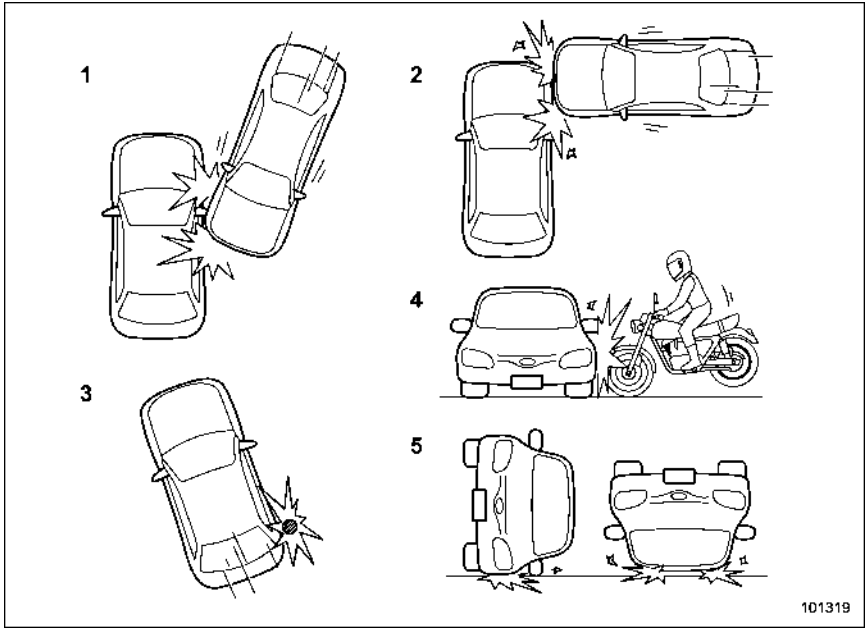

1) The vehicle is involved in an oblique side-on impact.
2) The vehicle is involved in a side-on impact in an area outside the vicinity of the passenger compartment.
3) The vehicle strikes a telephone pole or similar object.
4) The vehicle is involved in a side-on impact from a motorcycle.
5) The vehicle rolls onto its side or the roof.

There are many types of collisions which might not necessarily require SRS side airbag deployment. In the event of accidents like those illustrated, the SRS side airbag may not deploy depending on the level of accident forces involved.

– CONTINUED –

▽ **Examples of the types of accidents in which the SRS curtain airbag is unlikely to deploy.**

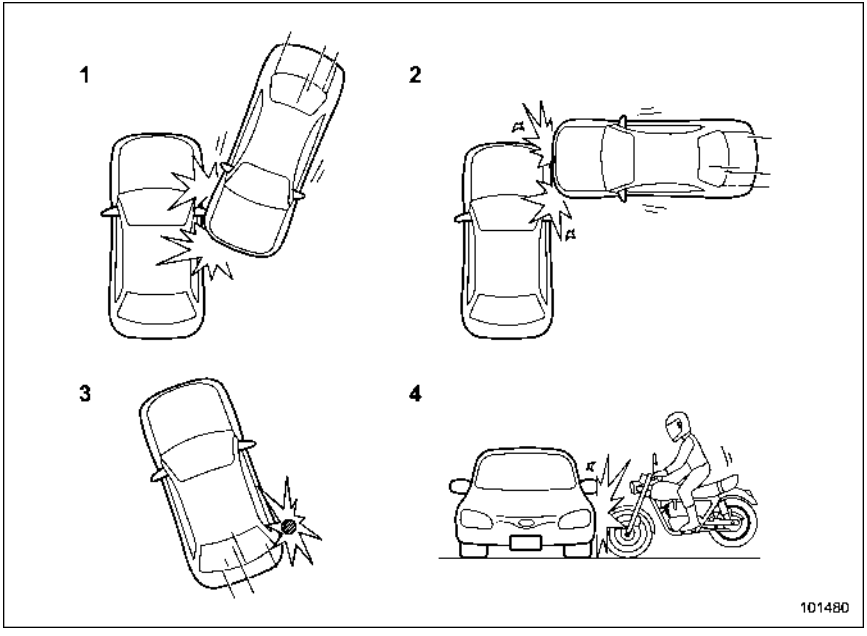

1) The vehicle is involved in an oblique side-on impact.
2) The vehicle is involved in a side-on impact in an area outside the vicinity of the passenger compartment.
3) The vehicle strikes a telephone pole or similar object.
4) The vehicle is involved in a side-on impact from a motorcycle.

There are many types of collisions which might not necessarily require SRS curtain airbag deployment. In the event of accidents like those illustrated, the SRS curtain airbag may not deploy depending on the level of accident forces involved.

▽ **Examples of the types of accidents in which the SRS side airbag and SRS curtain airbag are not designed to deploy in most cases**

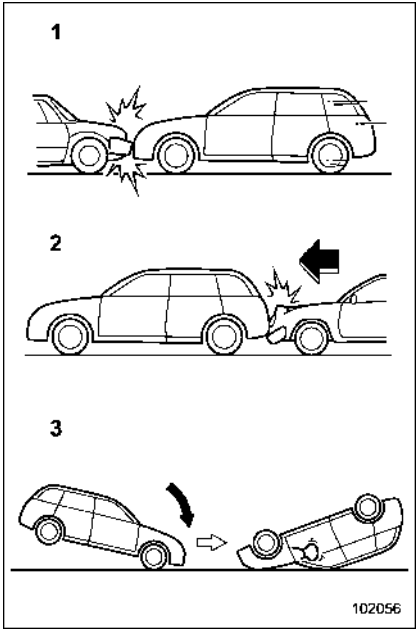

1) The vehicle is involved in frontal collision with another vehicle (moving or stationary).
2) The vehicle is struck from behind.
3) The vehicle pitches end over end.

In the event of accidents like those illustrated, the SRS side airbag and SRS curtain airbag are not designed to deploy in most cases.

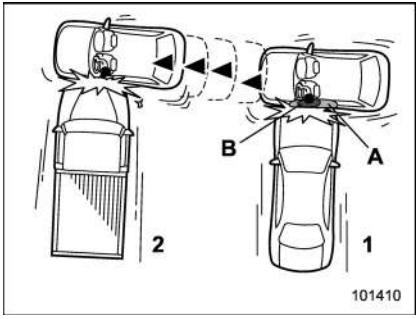

1) First impact
2) Second impact
A) SRS curtain airbag
B) SRS side airbag

In an accident where the vehicle is struck from the side more than once, the SRS side airbag and SRS curtain airbag deploy only once on the first impact.

Example: In the case of a double side impact collision, first with one vehicle and immediately followed by another from the same direction, once the SRS side airbag and SRS curtain airbag are activated on the first impact, they will not be activated on the second.

■ SRS airbag system monitors

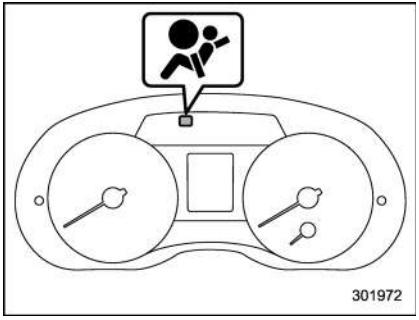

SRS airbag system warning light (type A)

– CONTINUED –

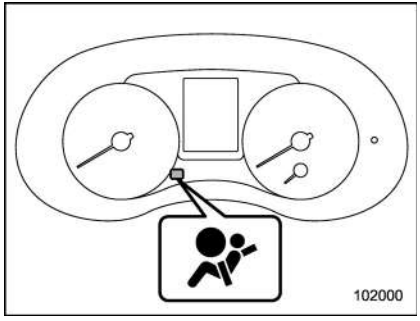

SRS airbag system warning light (type B)

A diagnostic system continually monitors the readiness of the SRS airbag system (including front seatbelt pretensioners) while the vehicle is being driven. The SRS airbag system warning light will show normal system operation by illuminating for approximately 6 seconds when the ignition switch is turned to the “ON” position.

The following components are monitored by the indicator:

- Front sub sensor
  - Right-hand side
  - Left-hand side
- Airbag control module (including impact sensor and rollover sensor)
- Frontal airbag module
  - Driver’s side
  - Front passenger’s side
- Knee airbag module (driver’s side)
- Side airbag sensor
  - Center pillar right-hand side
  - Center pillar left-hand side
- Front door impact sensor
  - Right-hand side
  - Left-hand side
- Side airbag module
  - Driver’s side
  - Front passenger’s side
- Curtain airbag sensor
  - Rear wheel house right-hand side
  - Rear wheel house left-hand side
- Curtain airbag module
  - Right-hand side
  - Left-hand side
- Satellite safing sensor (under the rear center seat)
- Seatbelt pretensioner
  - Driver’s side
  - Front passenger’s side
- Lap belt pretensioner (front passenger’s side)
- Seatbelt buckle switch (front passenger’s side)
- Front passenger’s occupant detection system sensor
- Front passenger’s occupant detection control module
- Front passenger’s frontal airbag ON and OFF indicator
- All related wiring

WARNING

If the warning light exhibits any of the following conditions, there may be a malfunction in the seatbelt pretensioners and/or SRS airbag system.

- **Flashing or flickering of the warning light**
- **No illumination of the warning light when the ignition switch is first turned to the “ON” position**
- **Continuous illumination of the warning light**
- **Illumination of the warning light while driving**

Immediately take your vehicle to your nearest SUBARU dealer to have the system checked. Unless checked and properly repaired, the seatbelt pretensioners and/or SRS airbag will not operate properly in the event of a collision, which may increase the risk of injury.

■ SRS airbag system servicing

WARNING

- When discarding an airbag module or scrapping the entire vehicle damaged by a collision, consult your SUBARU dealer.
- The SRS airbag has no user-serviceable parts. Do not use electrical test equipment on any circuit related to the SRS airbag system. For required servicing of the SRS airbag, consult your nearest SUBARU dealer. Tampering with or disconnecting the system's wiring could result in accidental inflation of the SRS airbag or could make the system inoperative, which may result in serious injury.

CAUTION

If you need service or repair in areas indicated in the following list, have the work performed by an authorized SUBARU dealer. The SRS airbag control module, impact sensors and airbag modules are stored in these areas.

- Under the center of the instrument panel
- On both the right and left sides at the front of the vehicle
- Steering wheel and column and nearby areas
- Bottom of the steering column and nearby areas
- Top of the dashboard on front passenger's side and nearby areas
- Each front seat and nearby area
- Inside each center pillar
- Inside each front door
- In each roof side (from the front pillar to a point over the rear seat)
- Between the rear seat cushion and rear wheel house on each side
- Under the rear center seat

In the event that the SRS airbag is deployed, replacement of the system should be performed only by an authorized SUBARU dealer. When the components of the SRS airbag system are replaced, use only genuine SUBARU parts.

NOTE

In the following cases, contact your SUBARU dealer as soon as possible.

- The front part of the vehicle was involved in an accident in which only the driver's SRS frontal airbag or both driver's and front passenger's SRS frontal airbags did not deploy.
- The pad of the steering wheel, the cover over the front passenger's SRS frontal airbag, or either roof side (from the front pillar to a point over the rear seat) is scratched, cracked, or otherwise damaged.
- The center pillar, front door, rear wheel house or rear sub frame, or an area near these parts, was involved in an accident in which the SRS side airbag and SRS curtain airbag did not deploy.
- The fabric or leather of either front seatback is cut, frayed, or otherwise damaged.
- The rear part of the vehicle was involved in an accident in which no SRS airbag was deployed.

– CONTINUED –

Precautions against vehicle modification

WARNING

To avoid accidental activation of the system or rendering the system inoperative, which may result in serious injury, no modifications should be made to any components or wiring of the SRS airbag system.

This includes following modifications.

- **Installation of custom steering wheels**
- **Attachment of additional trim materials to the dashboard**
- **Installation of custom seats**
- **Replacement of seat fabric or leather**
- **Installation of additional fabric or leather on the front seat**
- **Attachment of a hands-free microphone or any other accessory to a front pillar, a center pillar, a rear pillar, the windshield, a side window, an assist grip, or any other cabin surface that would be near a deploying SRS curtain airbag.**
- **Installation of additional electrical/electronic equipment such as a mobile two-way radio on or near the SRS airbag system components and/or wiring is not advisable. This could interfere with proper operation of the SRS airbag system.**

CAUTION

Do not perform any of the following modifications. Such modifications can interfere with proper operation of the SRS airbag system.

- **Attachment of any equipment (bush bar, winches, snow plow, skid plate, etc.) other than genuine SUBARU accessory parts to the front end.**
- **Modification of the suspension system or front end structure.**
- **Installation of a tire of different size and construction from the tires specified on the vehicle placard attached to the driver's door pillar or specified for individual vehicle models in this Owner's Manual.**
- **Attachment of any equipment (side steps or side sill protectors, etc.) other than genuine SUBARU accessory parts to the side body.**

Always consult your SUBARU dealer if you want to install any accessory parts on your vehicle.

Keys 2-3
Key number plate 2-3
Immobilizer 2-3
Security indicator light 2-4
Key replacement 2-4
Certification for immobilizer system 2-4
Door locks 2-5
Locking and unlocking from the outside 2-5
Locking and unlocking from the inside 2-7
Battery drainage prevention function 2-7
Power door locking switches 2-8
Key lock-in prevention function 2-9
Keyless access with push-button start system (if equipped) 2-9
Access key 2-10
Safety precautions 2-10
Locking and unlocking with “keyless access” entry function 2-13
Selecting audible signal operation 2-17
Warning chimes and warning indicator 2-17
Disabling keyless access function 2-17
When access key does not operate properly 2-19
Replacing battery of access key 2-19
Replacing access key 2-19
Certification for keyless access with push-button start system 2-19
PIN Code Access (models with “keyless access with push-button start system”) 2-20
Registering a PIN code 2-21
Unlocking 2-22
Remote keyless entry system 2-22
Locking the doors 2-23
Unlocking the doors 2-24
Unlocking the rear gate 2-24
Vehicle finder function 2-24
Sounding a panic alarm 2-24
Selecting audible signal operation (models without “keyless access with push-button start system”) 2-24
Replacing the battery 2-25
Replacing lost transmitters 2-25
Certification for remote keyless entry system 2-25
Alarm system 2-26
System operation 2-26
Activating and deactivating the alarm system 2-27
If you have accidentally triggered the alarm system 2-27
Arming the system 2-27
Disarming the system 2-30
Valet mode 2-31
Passive arming (models without “keyless access with push-button start system”) 2-31
Tripped sensor identification 2-32
Shock sensors (dealer option) 2-33
Child safety locks 2-33
Windows 2-34
Power window operation by driver 2-34
Power window operation by passengers 2-36
Initialization of power window 2-37

Rear gate **2-37**
Lock/unlock **2-37**
Open/close **2-38**

Moonroof (if equipped) **2-39**
Moonroof switches **2-39**
Sun shade **2-40**

Keys

NOTE

For models with “keyless access with push-button start system”, refer to “Keyless access with push-button start system” ☞2-9.

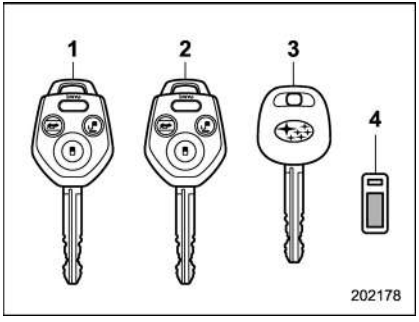

1) Master key
2) Submaster key
3) Sub key
4) Key number plate

Three types of keys are provided for your vehicle.

CAUTION

Do not attach a large key holder or key case to either key. If it bangs against your knees while you are driving, it could turn the ignition switch from the “ON” position to the “ACC” or “LOCK” position, thereby stopping the engine.

■ Key number plate

The key number is stamped on the key number plate attached to the key set. Write down the key number and keep it in another safe place, not in the vehicle. This number is needed to make a replacement key if you lose your key or lock it inside the vehicle. Refer to “Key replacement” ☞2-4.

Immobilizer

The immobilizer system is designed to prevent an unauthorized person from starting the engine. Only keys registered with your vehicle’s immobilizer system can be used to operate your vehicle. This system, however, is not a 100% anti-theft guarantee.

For models with “keyless access with push-button start system”:

If you press the push-button ignition switch when carrying an unregistered access key, the switch will not turn to the “ON” position and the engine will not start.

If the engine does not start, perform the procedure described in “Starting engine” ☞9-18.

For models without “keyless access with push-button start system”:

Even if an unregistered key fits into the ignition switch and can be turned to the “START” position, the engine will automatically stop after several seconds.

If the engine does not start, pull out the key once before trying again. Refer to “Ignition switch (models without “keyless access with push-button start system”)” ☞3-4.

– CONTINUED –

CAUTION

- **Do not place the key under direct sunlight or anywhere it may become hot.**
- **Do not get the key wet. If the key gets wet, wipe it dry with a cloth immediately.**

NOTE

- **To protect your vehicle from theft, please pay close attention to the following security precautions:**
  - **– Never leave your vehicle unattended with its keys inside.**
  - **– Before leaving your vehicle, close all windows and the moonroof, and lock the doors and rear gate.**
  - **– Do not leave spare keys or any record of your key number in the vehicle.**
- **The vehicle has a maintenance-free type immobilizer system.**

■ Security indicator light

Refer to “Security indicator light” ☞3-30.

■ Key replacement

Your key number plate will be required if you ever need a replacement key made. Any new key must be registered for use with your vehicle’s immobilizer system before it can be used. The maximum number of keys that can be registered for use with one vehicle is as follows.

- Four (models without “keyless access with push-button start system”)
- Seven (models with “keyless access with push-button start system”)

One key that has already been registered is required in order to register a new key.

If you lose a key, the lost key’s ID code still remains in the memory of the vehicle’s immobilizer system. For security reasons, the lost key’s ID code should be erased from the memory. To erase the lost key’s ID code, all keys that will be used are required.

For details about new key registration and erasing the lost key’s ID code, contact your SUBARU dealer.

■ Certification for immobilizer system

- **For models with “keyless access with push-button start system”:**

Refer to “Certification for keyless access with push-button start system” ☞2-19.

- **For models without “keyless access with push-button start system”:**
  - **– U.S.-spec. models**

FCC ID: MOZRI-38BFH

CAUTION

FCC WARNING
Changes or modifications not expressly approved by the party responsible for compliance could void the user’s authority to operate the equipment.

This device complies with part 15 of the FCC Rules. Operation is subject to the following two conditions: (1) This device may not cause harmful interference, and (2) this device must accept any interference received, including interference that may cause undesired operation.

– Canada-spec. models

NOTE

This device complies with Industry Canada's licence-exempt RSSs. Operation is subject to the following two conditions: (1) This device may not cause interference; and (2) This device must accept any interference, including interference that may cause undesired operation of the device.

REMARQUE

Le présent appareil est conforme aux CNR d'Industrie Canada applicables aux appareils radio exempts de licence. L'exploitation est autorisée aux deux conditions suivantes: (1) l'appareil ne doit pas produire de brouillage; (2) l'utilisateur de l'appareil doit accepter tout brouillage radioélectrique subi, même si le brouillage est susceptible d'en compromettre le fonctionnement.

203161

– Mexico-spec. models

Este equipo opera a título secundario, consecuentemente, debe aceptar interferencias perjudiciales incluyendo equipos de la misma clase y puede no causar interferencias a sistemas operando a título primario.

500612

Door locks

■ Locking and unlocking from the outside

NOTE

If you unlock the driver's door with a key (including a mechanical key) and open the door while the alarm system is armed, the alarm system is triggered and the vehicle's horn sounds. In this case, perform any of the following operations:

Models with "keyless access with push-button start system":

- **Press any button on the access key (except when the access key battery is discharged).**
- **Press the push-button ignition switch to "ACC".**
- **Carry the access key and perform either of the following procedures.**
  - **Grip the front door handle**
  - **Press the rear gate opener button**

Models without "keyless access with push-button start system":

- **Press any button on the remote transmitter (except when the transmitter battery is discharged).**
- **Insert the key into the ignition switch and turn the ignition switch to**

– CONTINUED –

“ON”.

For details about the alarm system, refer to “Alarm system” ☞2-26.

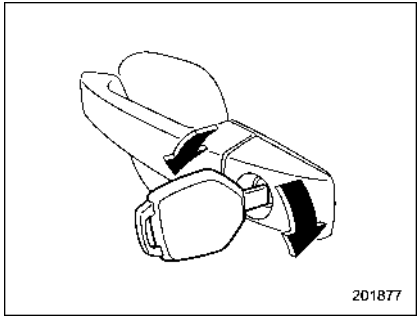

To lock the driver’s door from the outside with the key, turn the key toward the front.

To unlock the door, turn the key toward the rear. Pull the outside door handle to open an unlocked door.

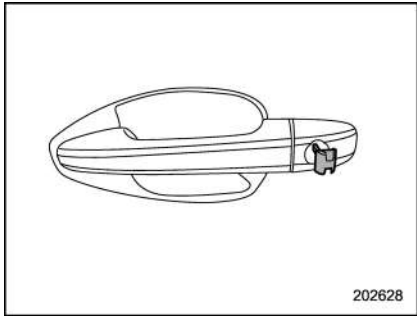

NOTE

For models with “keyless access with push-button start system”:

The mechanical key is directional. If the key cannot be inserted, change the direction that the grooved side is facing and insert it again.

To lock the door from outside without the key, the following methods are available.

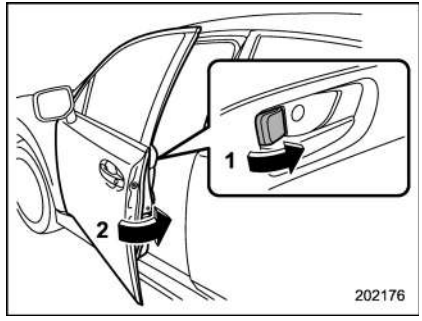

Locking using lock lever

1) Rotate the lock lever forward.
2) Close the door.

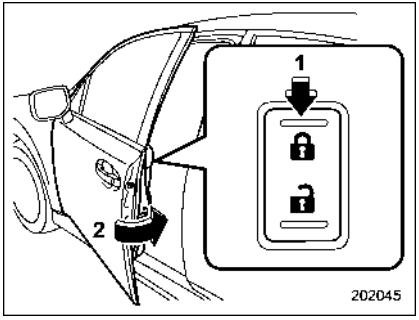

Locking using power door locking switch

1) Press the front side (lock side) of the power door locking switch.
2) Close the door.

In this case, all closed doors and the rear gate are locked at the same time.

Always make sure that all doors and the rear gate are locked before leaving your vehicle.

NOTE

Make sure that you do not leave the key inside the vehicle when locking the doors from the outside without the key.

■ Locking and unlocking from the inside

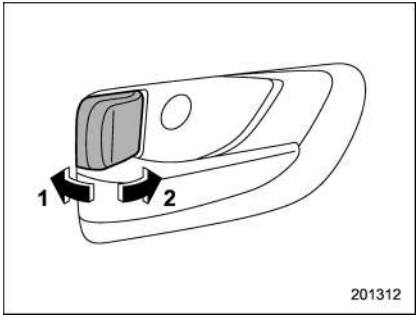

1) Unlock
2) Lock

To lock the door from the inside, rotate the lock lever forward. To unlock the door from the inside, rotate the lock lever rearward.

The red mark on the lock lever appears when the door is unlocked.

Pull the inside door handle to open an unlocked door.

Always make sure that all doors and the rear gate are closed before starting to drive.

⚠ WARNING

Keep all doors locked when you drive, especially when small children are in your vehicle.

Along with the proper use of seatbelts and child restraints, locking the doors reduces the chance of being thrown out of the vehicle in an accident.

It also helps prevent passengers from falling out if a door is accidentally opened, and intruders from unexpectedly opening doors and entering your vehicle.

■ Battery drainage prevention function

If a door or the rear gate is not completely closed, the interior lights will remain illuminated as a result. However, several lights are automatically turned off by the battery drainage prevention function to prevent the battery from discharging. The following interior lights are affected by this function.

– CONTINUED –

Item	Switch position	Automatically turning off
Map lights*1	OFF*1	Approximately 20 minutes later
Dome light	DOOR	Approximately 20 minutes later
Ignition switch light	—	Approximately 20 minutes later
Cargo area light	DOOR	Approximately 20 minutes later

*1: The battery drainage prevention function affects only the map lights on models with the moonroof, and only when the map light switches are in the OFF position. The map lights on models without the moonroof do not turn off automatically, so push the light switches manually to turn them off.

The operational/non-operational setting of this function can be changed by a SUBARU dealer. Contact your SUBARU dealer to change the setting.

NOTE

- **The factory setting (default setting) for this function is set as "operational".**
- **When leaving the vehicle, please make sure that all doors and the rear gate are completely closed.**
- **The battery drainage prevention function does not operate while the key is in the ignition switch.**

Power door locking switches

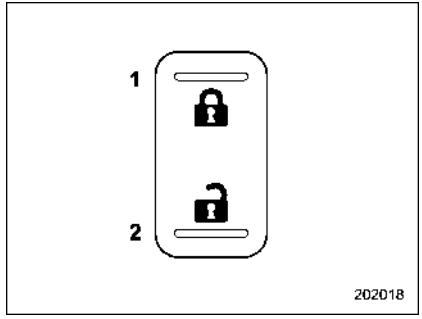

1) Lock
2) Unlock

All doors and the rear gate can be locked and unlocked by the power door locking switches located at the driver's side and the front passenger's side doors.

To lock the doors, push the front side of the switch.
To unlock the doors, push the rear side of the switch.

When you close the doors after you set the door locks, the doors remain locked.

NOTE

Make sure that you do not leave the key inside the vehicle before locking the doors from the outside using the power door locking switches.

■ Key lock-in prevention function

This function prevents the doors from being locked under the following conditions.

- The key is still in the ignition switch (models without “keyless access with push-button start system”)
- The ignition switch is in the “ON” position (models with “keyless access with push-button start system”)

This function’s operational/non-operational setting can be changed by a SUBARU dealer. Contact a SUBARU dealer for details.

NOTE

- **The factory setting (default setting) for this function is set as “operational”.**
- **When leaving the vehicle, make sure you are holding the key before locking the doors.**

▼ Behavior with key lock-in prevention function operational

With the driver’s door open, the doors are automatically kept unlocked even if the front side of the power door locking switch is pressed.

▼ Behavior with key lock-in prevention function non-operational

- If the lock lever is turned to the front (“LOCK”) position with the driver’s door open and the driver’s door is then closed with the lock lever in that position, the driver’s door is locked.
- If the spare key is used to lock the driver’s door from the outside of the vehicle, the door is locked.

Keyless access with push-button start system (if equipped)

The keyless access with push-button start system allows you to perform the following functions when you are carrying the access key.

- Locking and unlocking of the doors and rear gate
- Starting and stopping the engine. For detailed information, refer to “Starting and stopping engine (models with push-button start system)” ☞7-11.
- Arming and disarming the alarm system. For detailed information, refer to “Alarm system” ☞2-26.

Locking and unlocking by the remote keyless entry system can also be controlled with the buttons on the access key. For detailed information, refer to “Remote keyless entry system” ☞2-22.

– CONTINUED –

■ Access key

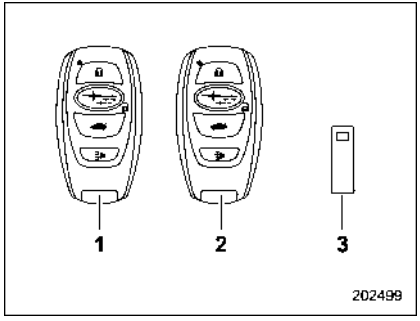

1) Access key (main)
2) Access key (sub)
3) Key number plate

The vehicle has two access keys and a key number plate. For details about the key number plate, refer to “Key number plate” ☞2-3.

A mechanical key is attached to each access key. The mechanical key is used for the following operations.

- Locking and unlocking the driver’s door
- Locking and unlocking the glove box

You cannot unlock the glove box without using the mechanical key. You can keep the glove box locked when you leave your vehicle and the access key (with the mechanical key removed) at a parking facility.

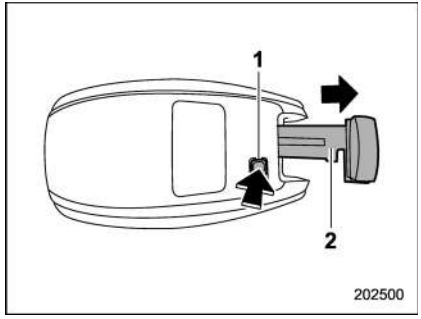

1) Release button
2) Mechanical key

While pressing the release button of the access key, take out the mechanical key.

■ Safety precautions

▼ Regarding radio wave

⚠ WARNING

If you wear an implanted pacemaker or an implanted defibrillator, stay at least 8.7 in (22 cm) away from the transmitting antennas installed on the vehicle.

The radio waves from the transmitting antennas on the vehicle could adversely affect the operation of implanted pacemakers and implanted defibrillators.

If you wear electric medical equipment other than an implanted pacemaker or an implanted defibrillator, before using the keyless access with push-button start system, refer to “Radio waves used for the keyless access with push-button start system” ☞2-13, and contact the electric medical equipment manufacturer for more information. The radio waves from the transmitting antennas on the vehicle could adversely affect the operation of the electric medical equipment.

CAUTION

When you carry the access key on an airplane, do not press the button of the access key while in the airplane. When any button of the access key is pressed, radio waves are sent and may affect the operation of the airplane. When you carry the access key in a bag on an airplane, take measures to prevent the buttons of the access key from being pressed.

NOTE

The status of the access key and environmental conditions may interfere with the communication between the access key and the vehicle under the following conditions.

- When operating near a source of strong radio waves or other interference, such as a broadcast station or power transmission lines
- When products that transmit radio waves are used, such as an access key or a remote transmitter key of another vehicle
- When carrying the access key of your vehicle together with an access key or a remote transmitter of another vehicle
- When the access key is placed near wireless communication equipment such as a cell phone, or near a metallic object
- When metallic accessories are attached to the access key
- When carrying the access key with electronic appliances such as a laptop computer
- When the battery of the access key is discharged

In such cases, it may not be possible to lock or unlock the doors or start the engine.

▼ Regarding malfunction

CAUTION

- Never leave or store the access key inside the vehicle or within 6.6 ft (2 m) around the vehicle (e.g., in the garage). The access key may be locked inside the vehicle, or the battery may discharge rapidly. Note that the push-button ignition switch may not turn on in some cases depending on the location of the access key.
- The access key contains electronic components. Observe the following precautions to prevent malfunctions or battery discharge.
  - Although you can replace the battery of the access key by yourself, it is recommended that the battery be replaced by a SUBARU dealer to avoid the risk of damage at the time of replacement.
  - Do not get the access key wet. If the access key gets wet, wipe it off immediately and let it dry completely.
  - Do not apply strong impacts to the access key.
  - Keep the access key away from magnetic sources.
  - Never leave the access key in direct sunlight or anywhere that may become hot, such as on the dashboard. It may damage the battery or cause circuit malfunctions.
  - Do not wash the access key in an ultrasonic washer.
  - Do not leave the access key in humid or dusty locations, or

– CONTINUED –

near personal computers or home electric appliances.

NOTE

After the vehicle battery is discharged or replaced, initialization of the steering lock system may be required to start the engine. In this case, perform the following procedure to initialize the steering lock.

1) Turn the push-button ignition switch to the "OFF" position. For details, refer to "Switching power status" ☞3-7.
2) Open and close the driver's door.
3) Wait for approximately 10 seconds.

When the steering is locked, the initialization is completed.

▼ Regarding access key

⚠ CAUTION

If the access key is dropped, the integrated mechanical key inside may become loose. Be careful not to lose the mechanical key.

NOTE

- The access key is always communicating with the vehicle and is continuously using the battery. Although the life of the battery varies depending on the operating conditions, it is approximately 1 to 2 years. If the battery becomes fully discharged, replace it with a new one.
- If an access key is lost, it is recommended that all of the remaining access keys be reregistered. For reregistration of an access key, contact a SUBARU dealer.
- Up to 7 access keys can be registered for one vehicle. For a spare access key, contact a SUBARU dealer.
- Carefully store the key number plate supplied with the access key. It is necessary for vehicle repair and additional registration of access keys.
- Do not leave the access key in the storage spaces inside the vehicle. Vibrations may damage the key or turn on the switch, possibly resulting in a lockout.
- Do not leave the access key in the following places.
  - On the instrument panel
  - On the floor
  - Inside the glove box
  - Inside the door trim pocket
  - On the rear seat
  - In the cargo area

  If you do, the following situations may occur.
  - The access key is mistakenly locked inside the vehicle.
  - A false warning is issued although no malfunction actually occurs.
  - No warning is issued even when any malfunction occurs.

▼ Regarding setting

NOTE

- The operational/non-operational setting for the keyless access function can be changed. For the setting procedure, refer to "Disabling keyless access function" ☞2-17. The setting can also be changed by a SUBARU dealer. For more details, contact a SUBARU dealer.
- For detailed information about the operation method for the push-button ignition switch while the keyless access function is switched to the non-operational mode, refer to "Access key – if access key does not operate properly" ☞9-17.

▼ **Radio waves used for the keyless access with push-button start system**

The keyless access with push-button start system uses radio waves of 134 kHz, in addition to the radio waves used for the remote keyless entry system. The radio waves are periodically output from the antennas installed on the vehicle as shown in the following illustration.

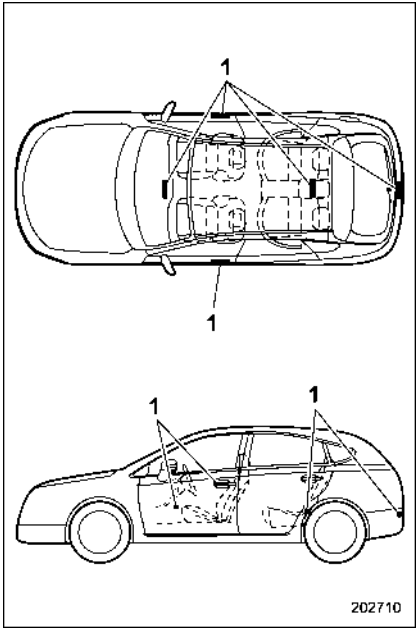

1) Antenna

■ Locking and unlocking with “keyless access” entry function

▼ **Operating ranges**

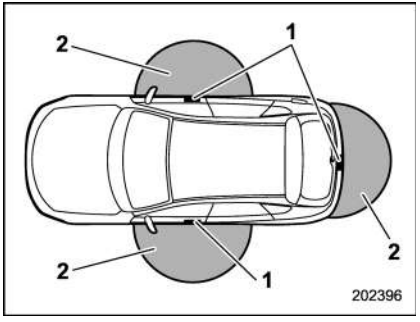

1) Antenna
2) Operating range

- The operating range of the door locking/unlocking function is approximately 16 to 32 in (40 to 80 cm) from the respective door handle.
- The operating range of the rear gate locking/unlocking function is approximately 16 to 32 in (40 to 80 cm) from the rear gate ornament.

– CONTINUED –

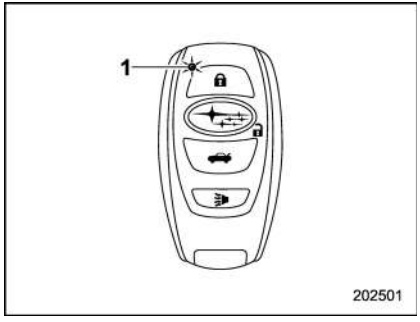

1) LED indicator

When the access key is within either of the operating ranges of the front doors, the LED indicator on the access key flashes. When the keyless access functions are disabled, the LED indicator does not flash unless a button on the access key is pressed.

▽ Operating range tips

Regarding malfunction:

The keyless access function may not operate properly due to the following reasons.

- The access key is placed too close to the vehicle body (in this case, repeat the operation from further away).
- The access key is placed near the ground or in an elevated location from the ground, even if it is in the indicated operating range.
- The status of the access key and the radio wave conditions around the vehicle (e.g., access key battery discharge) (in this case, perform the procedure described in “Locking and unlocking” ☞9-17).

Precautions:

- When the access key is within the operating range, it is possible for anyone, even someone who is not carrying the access key, to operate the keyless access function. Please note that the keyless access function is only available for the following items when the access key is detected within operating range.
  - Door handle
  - Door lock sensor
  - Rear gate opener button
  - Rear lock button
- It is not possible to lock the doors and rear gate using the keyless access function when the access key is inside the vehicle. However, depending on the status of the access key and the environmental conditions, the access key may be locked inside the vehicle. Before locking the doors and rear gate, make sure that you have the access key.
- The operating range may be reduced, or the keyless access function may not operate in the following cases:
  - When the battery of the access key is discharged
  - When the access key is in a location with strong radio waves or noise (e.g., near a radio tower, power plant, broadcast station or an area where wireless equipment is used)
  - While talking on a cell phone

  In such a case, perform the procedure described in “Locking and unlocking” ☞9-17.
- When an access key is in the operating range, if the door handle becomes wet due to exposure to a significant amount of water when the vehicle is washed or during heavy rain, the doors may be locked or unlocked.

▼ How to use keyless access functions

▽ Keyless access function tips

- Turn off the push-button ignition switch before locking the doors (including rear gate) using the keyless access function. It is not possible to lock the doors (including the rear gate) using the keyless access function when the push-button ignition switch is on the “ACC” or “ON” position.

For details about turning off the push-button ignition switch, refer to “Switching power status” ☞3-7.

- If the door handle is gripped with a gloved hand, the door lock may not be released.
- If the door lock sensor is touched three times or more repeatedly, the system will ignore the sensor operation.
- When performing the locking procedure too quickly, locking may not have been completed. After performing the locking procedure, it is recommended to pull the REAR door handle to confirm that the doors have been locked.
- It is possible to lock the doors even when one of the doors is open. After performing the locking procedure, close the opened door or rear gate to lock it.
- Within 3 seconds after locking the doors and the rear gate by using the keyless access function, it is not possible to unlock doors and/or the rear gate by using the keyless access function.
- When locking, be sure to carry the access key to prevent locking the access key in the vehicle.
- The setting of the hazard warning flasher operation and the volume of the audible signal can be changed by your SUBARU dealer. We recommend that you contact your SUBARU dealer for details.
- For models with the multi function display, the setting of the hazard warning flasher operation can be changed by operating the multi function display. For details, refer to “Hazard warning flasher setting” ☞3-78.

▽ Unlocking

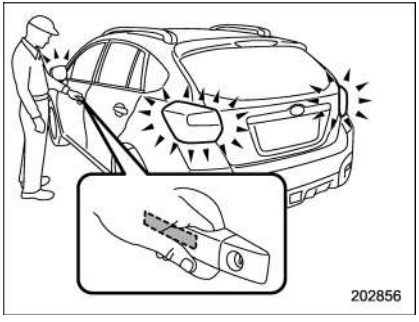

Carry the access key, and grip the door handle.

- When the driver’s door handle is gripped, only the driver’s door will be unlocked.
- When the front passenger’s door handle is gripped, all doors (including the rear gate) will be unlocked.

Also, an electronic chirp will sound twice and the hazard warning flashers will flash twice.

▽ Opening rear gate

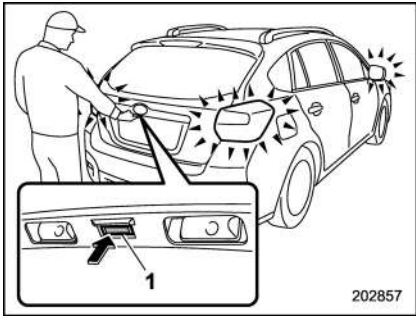

1) Rear gate opener button

Carry the access key, and press the rear gate opener button. Only the rear gate will be unlocked and opened. Also, an electronic chirp will sound twice and the hazard warning flashers will flash twice.

– CONTINUED –

▽ **Locking with the door lock sensor**

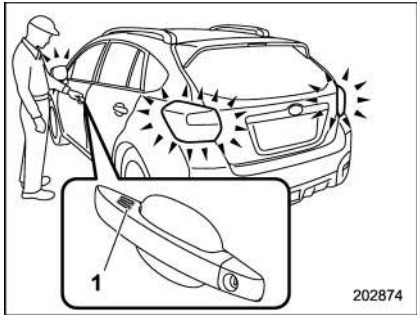

1) Door lock sensor

Carry the access key, close all doors (including the rear gate) and touch the door lock sensor on the door handle. All doors including the rear gate will be locked. Also, an electronic chirp will sound once and the hazard warning flashers will flash once.

NOTE

After touching the door lock sensor to lock all of the doors (including the rear gate), if you touch the door lock sensor once more to attempt the lock operation without first unlocking the doors, nothing will happen, even if the door lock sensor is touched. In this case, perform the unlocking operation once first. You can then touch the door lock sensor to lock the doors.

▽ **Locking with the rear lock button**

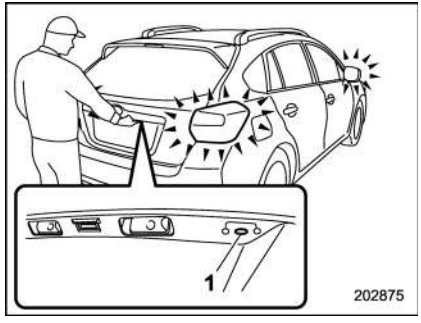

1) Rear lock button

Carry the access key, close all doors including the rear gate and press the rear lock button. The rear gate and all doors will be locked. Also, an electronic chirp will sound once and the hazard warning flashers will flash once.

▼ **Power saving function**

The keyless access function will be disabled in the following cases to protect the access key battery and the vehicle battery.

- **Case 1**: When the keyless access function and the remote keyless entry system have not been used for 2 weeks or longer while all doors are locked

To recover the keyless access function:

Operate one of the following items.

– Unlock the doors by operating any procedure other than gripping the front passenger's door handle
– Lock the doors
– Open a door and then close it

- **Case 2**: When the access key has been left in the operating range for 10 minutes or longer while all doors are locked

To recover the keyless access function:

Operate one of the following items.

– Unlock the doors by gripping the door handle
– Unlock the doors by pressing the rear gate opener button
– Lock the doors by touching the door lock sensor
– Lock or unlock the doors by using the remote keyless entry system
– Lock or unlock the doors by using the power door locking switch
– Open either of the front doors

▼ **Door unlock selection function**

The door unlock selection function makes the following operations possible.

- Unlocking the driver's door without unlocking any other doors (including the rear gate) when gripping the driver's door handle
- Opening the rear gate without unlocking any doors when pressing the rear gate opener button

The operational/non-operational setting for this function can be changed by a SUBARU dealer.

Operational:

- Only the driver's door will be unlocked when the driver's door handle is gripped.
- The rear gate will open, but the other doors will remain locked when the rear gate opener button is pressed.

Non-operational:

- All doors and the rear gate will be unlocked when the driver's door handle is gripped.
- The rear gate will open and all doors will be unlocked when the rear gate opener button is pressed.

The factory setting (default setting) is set as "operational".

For further details, consult a SUBARU dealer.

NOTE

The setting can be changed by your SUBARU dealer. Contact your SUBARU dealer for details. Also, for models with the multi function display, the setting can be changed by operating the multi function display. For details, refer to "Keyless access setting (models with "keyless access with push-button start system")" ☞3-83.

■ Selecting audible signal operation

Using an electronic chirp, the system will give you an audible signal when the doors lock and unlock. If desired, you may turn the audible signal off. For more details, contact a SUBARU dealer.

NOTE

For models with the multi function display, the setting can be changed by operating the multi function display. For details, refer to "Keyless buzzer volume setting" ☞3-78.

■ Warning chimes and warning indicator

The warning chime and the access key warning indicator are used for the following purposes.

- Minimizing improper operations when using the keyless access with push-button start system
- Helping protect your vehicle from theft

For details, refer to "Warning chimes and warning indicator of the keyless access with push-button start system" ☞3-25.

■ Disabling keyless access function

⚠ WARNING

If you wear an implanted pacemaker or an implanted defibrillator, perform the procedure described in "By operating the driver's door" ☞2-18 to disable the keyless access function. If you perform the procedure described in "By operating the access key" ☞2-18, the operation of an implanted pacemaker or implanted defibrillator may be affected by the radio waves from the transmitter antenna.

– CONTINUED –

When the vehicle is not going to be used for a long time, or when you choose not to use the keyless access function, the keyless access function can be disabled.

NOTE

- **The locking and unlocking function by the remote keyless entry system is not disabled.**
- **The setting can also be changed at SUBARU dealers. For more details, contact a SUBARU dealer.**
- **To start the engine while the functions are disabled, perform the procedure described in "Starting engine" ☞9-18.**
- **We recommend that you disable the keyless access functions under the following conditions.**
  - **– When the vehicle is not going to be used for an extended period of time**
  - **– When the keyless access functions are not going to be used**

▼ Disabling functions

▽ By operating the access key

If you have registered a PIN code for PIN Code Access, you can disable the keyless access function by operating the access key. For details about registering a PIN code, refer to "Registering a PIN code" ☞2-21.

1. Open the driver's door.

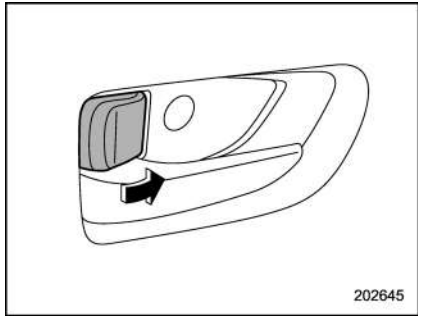

2. Rotate the lock lever forward.

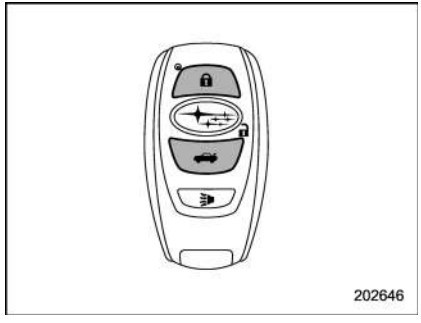

3. Press and hold the "🔒" button and "🚗" button on the access key simultaneously for more than 5 seconds.

A chirp sound will be heard, and the function will be disabled.

▽ By operating the driver's door

1. Sit in the driver's seat, and close the door.

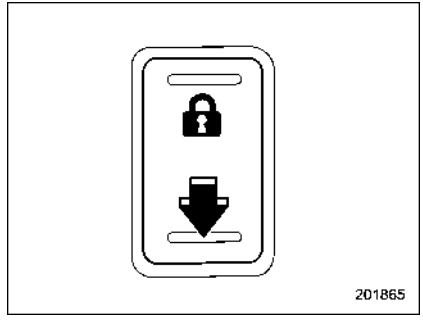

2. Push the rear side (unlock side) of the power door locking switch.
3. Within 5 seconds after step 2 is performed, open the driver's door.
4. Within 5 seconds after step 3 is performed, push the rear side (unlock side) of the power door locking switch twice while the door is open.
5. Within 10 seconds after step 4 is performed, close and open the driver's door twice.
6. Within 10 seconds after step 5 is performed, push the rear side (unlock

side) of the power door locking switch twice while the door is open.

7. Within 10 seconds after step 6 is performed, close and open the driver's door once.

8. Within 5 seconds after step 7 is performed, close the door.

A chirp sound will be heard, and the functions will be disabled.

NOTE

In steps 4 and 6, press the power door locking switch slowly. If the switch is pressed quickly, the functions may not be disabled.

▼ Enabling functions

When the procedure to disable the functions is performed again, a chirp sound will be heard, and the functions are enabled.

NOTE

- **The keyless access function will be enabled only if you perform the procedure in the same manner you disabled the function (for example, when disabling by operating the driver's door, the function will not be enabled even if you operate the access key).**
- **Press the push-button ignition switch if you do not know the procedure in which the keyless access function was disabled.**
  - **When disabling by operating the driver's door: a chirp will not be heard**
  - **When disabling by operating the access key: a chirp will be heard**

■ When access key does not operate properly

Refer to "Access key – if access key does not operate properly" ☞9-17.

■ Replacing battery of access key

Refer to "Replacing battery of access key" ☞11-42.

■ Replacing access key

Access keys can be replaced at SUBARU dealers. For more details, contact a SUBARU dealer.

■ Certification for keyless access with push-button start system

- **U.S.-spec. models**

FCC ID: HYQ14AHC
FCC ID: HYQ13CZZ
FCC ID: Y8PSSPIMB02
FCC ID: Y8PSSPLF02

⚠ CAUTION

FCC WARNING

Changes or modifications not expressly approved by the party responsible for compliance could void the user's authority to operate the equipment.

NOTE

This device complies with part 15 of the FCC Rules. Operation is subject to the following two conditions: (1) This device may not cause harmful interference, and (2) this device must accept any interference received, including interference that may cause undesired operation.

– CONTINUED –

- **Canada-spec. models**

NOTE

This device complies with Industry Canada's licence-exempt RSSs. Operation is subject to the following two conditions: (1) This device may not cause interference; and (2) This device must accept any interference, including interference that may cause undesired operation of the device.

REMARQUE

Le présent appareil est conforme aux CNR d'Industrie Canada applicables aux appareils radio exempts de licence. L'exploitation est autorisée aux deux conditions suivantes: (1) l'appareil ne doit pas produire de brouillage; (2) l'utilisateur de l'appareil doit accepter tout brouillage radioélectrique subi, même si le brouillage est susceptible d'en compromettre le fonctionnement.

203161

- **Mexico-spec. models**

Este equipo opera a título secundario, consecuentemente, debe aceptar interferencias perjudiciales incluyendo equipos de la misma clase y puede no causar interferencias a sistemas operando a título primario.

500612

IFT
RLVDE1413-2269
14AHC
DENSO

PIN Code Access (models with “keyless access with push-button start system”)

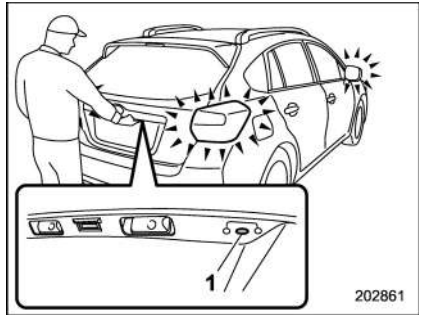

1) Rear lock button

While all doors (including the rear gate) are locked, you can unlock the doors (including the rear gate) without a key by pressing the rear lock button.

NOTE

PIN Code Access will be helpful if the key is accidentally left in the vehicle. It is recommended that a 5-digit security code (PIN code) is registered.

■ Registering a PIN code

▼ Preparation

1. Turn off the ignition switch.
2. Close all doors (including rear gate).
3. Press and hold the “🔒” button on the access key. All doors (including rear gate) will then be locked.
4. Keep the “🔒” button pressed, and press the rear lock button within 5 seconds after step 3.
5. Press and hold the above button for more than 5 seconds. Then a chirp will sound.
6. Release the “🔒” button and rear lock button.
7. Press the “🔓” button on the access key while the chirp sounds.

Then the chirp will stop and the preparation is complete.

NOTE

If you do not press the “🔓” button on the access key, the chirp will sound for 30 seconds. In this case, the preparation for registering a PIN code does not complete even if the chirp stops.

▼ Registration

For example, to register “32468” as the PIN code, perform the following procedure.

1. Press the rear lock button three times.
2. After a buzzer (ding) sounds once, press the rear lock button twice.
3. After a buzzer (ding) sounds once, press the rear lock button four times.
4. After a buzzer (ding) sounds once, press the rear lock button six times.
5. After a buzzer (ding) sounds once, press the rear lock button eight times.
6. Perform steps 1 to 5 again within approximately 30 seconds after the buzzer starts sounding intermittently.
7. All doors (including rear gate) will be unlocked and locked. Then the PIN code will be registered.

NOTE

- **Press the rear lock button ten times to enter “0”.**
- **Change the PIN code frequently to protect your vehicle from theft.**
- **If you have lent your vehicle to another person, confirm that the PIN code has not been changed or deleted. If the PIN code has been changed or deleted, reregister a new PIN code.**
- **If you make an error during the registration procedure, press the “🔓” or “🚗” button on the access key. Then, start over from the procedure described in “Preparation”.**
- **To protect your vehicle from theft, you cannot register a string of the same five numbers together, such as “00000”, nor “12345” as a PIN code.**
- **Do not register your vehicle license plate number or simple numbers such as “11122” or “12121” as a PIN code. Doing so will increase the risk of vehicle theft.**
- **When you try to register “22222”, the registered PIN code will be deleted. You cannot unlock the doors by PIN Code Access until a new code is registered.**
- **After registering a new PIN code, make sure that you can unlock the doors using the PIN code.**
- **The PIN code cannot be deleted while the keyless access function is disabled by operating the access key.**
- **Reregister the PIN code in the following case.**
  - **when you forget the PIN code**
  - **when you want to change the PIN code**

– CONTINUED –

■ Unlocking

Perform steps 1 to 5 described in “Registration”.

NOTE

- **You cannot unlock by PIN Code Access in the following cases.**
  - **when the access key is within the operating ranges**
  - **when the ignition switch is in the “ACC” or “ON” position**
- **If you make an operation error during the unlocking procedure, start over with the unlocking procedure after waiting for 5 seconds or longer.**
- **To protect your vehicle from theft, a buzzer will sound if incorrect PIN codes are entered five times continuously. If this occurs, you cannot unlock the doors by PIN Code Access for 5 minutes.**

Remote keyless entry system

CAUTION

- **Do not expose the remote transmitter to severe shocks, such as those experienced as a result of dropping or throwing.**
- **Do not take the remote transmitter apart except when replacing the battery.**
- **Do not get the remote transmitter wet. If it gets wet, wipe it dry with a cloth immediately.**
- **When you carry the remote transmitter on an airplane, do not press the button of the remote transmitter while in the airplane. When any button of the remote transmitter is pressed, radio waves are sent and may affect the operation of the airplane. When you carry the remote transmitter in a bag on an airplane, take measures to prevent the buttons of the remote transmitter from being pressed.**

For models with “keyless access with push-button start system”, the access key is used as the transmitter for the remote keyless entry system. For models without “keyless access with push-button start system”, the transmitter for the remote keyless entry system is located inside the key head.

The remote keyless entry system has the following functions.

- Locking and unlocking the doors (and rear gate) without a key
- Sounding a panic alarm
- Arming and disarming the alarm system. For detailed information, refer to “Alarm system” ☞2-26.

The operable distance of the remote keyless entry system is approximately 30 feet (10 meters). However, this distance will vary depending on environmental conditions. The system’s operable distance will be shorter in areas near a facility or electronic equipment emitting strong radio waves such as a power plant, broadcast station, TV tower, or remote controller of home electronic appliances.

NOTE

- **For models with “keyless access with push-button start system”, the remote keyless entry system will not be activated when the push-button ignition switch is in any position other**

than the "OFF" position.

- **For models without "keyless access with push-button start system", the remote keyless entry system will not be activated when the key is inserted in the ignition switch.**

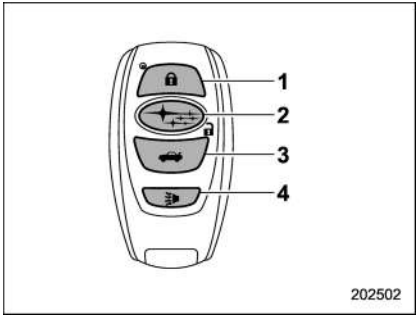

Access key
1) Lock/arm button
2) Unlock/disarm button
3) Rear gate unlock button
4) PANIC button

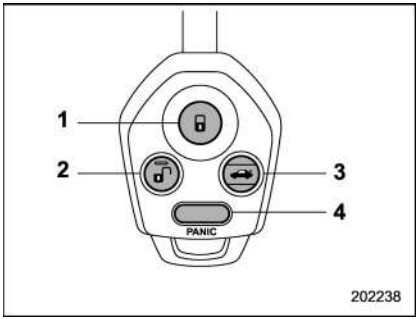

Transmitter
1) Lock/arm button
2) Unlock/disarm button
3) Rear gate unlock button
4) PANIC button

NOTE

The hazard warning flashers will flash once or twice when the access key/ transmitter button is pressed in the following cases.

- **When locking the doors**
- **When unlocking the doors**
- **When unlocking the rear gate**

Operation of the hazard warning flashers in the above cases can be set to "On" or "Off" by a SUBARU dealer. Consult your SUBARU dealer for details. Also, for models with a multi function display, the setting can be changed using the display. For details, refer to "Hazard warning flasher setting" ☞3-78.

■ Locking the doors

Press the lock/arm button to lock all doors and rear gate. An electronic chirp will sound once and the hazard warning flashers will flash once.

If any of the doors (or the rear gate) is not fully closed, the following will occur to alert you that the doors (or the rear gate) are not properly closed.

- an electronic chirp sounds five times.
- the hazard warning flashers flash five times.

When you close the door, it will automatically lock and then the following will occur.

- an electronic chirp sounds once.
- the hazard warning flashers flash once.

– CONTINUED –

■ Unlocking the doors

Press the unlock/disarm button to unlock the driver's door. An electronic chirp will sound twice and the hazard warning flashers will flash twice. To unlock all doors and the rear gate, briefly press the unlock/disarm button a second time within 5 seconds.

NOTE

If the interval between the first and second presses of the unlock/disarm button (for unlocking of all of the doors and the rear gate) is extremely short, the system may not respond.

■ Unlocking the rear gate

Press the rear gate unlock button to unlock the rear gate.

An electronic chirp will sound twice and the hazard warning flashers will flash twice.

■ Vehicle finder function

Use this function to find your vehicle parked among many vehicles in a large parking lot. Provided you are within 30 feet (10 meters) of the vehicle, pressing the lock/arm button three times in a 5-second period will cause your vehicle's horn to sound once and its hazard warning flashers to flash three times.

NOTE

If the interval between presses is too short when you press the lock/arm button three times, the system may not respond to the signals from the remote transmitter.

■ Sounding a panic alarm

To activate the alarm, press the "PANIC" button once.

The horn will sound and the hazard warning flashers will flash.

To deactivate the panic alarm, press any button on the remote transmitter. Unless a button on the remote transmitter is pressed, the alarm will be deactivated after approximately 30 seconds.

■ Selecting audible signal operation (models without "keyless access with push-button start system")

Using an electronic chirp, the system will give you an audible signal when the doors lock and unlock. If desired, you may turn the audible signal off.

Perform the following steps to deactivate the audible signal. You can also use the same steps to restore the function.

1. Sit in the driver's seat and shut all doors and the rear gate.

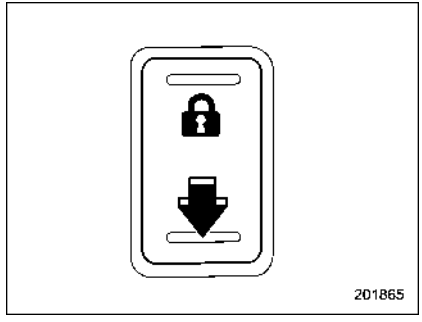

2. Hold down the REAR (UNLOCK) side of the power door locking switch.
3. While holding down the REAR (UNLOCK) side of the power door locking switch, pull the key out and re-insert it into

the ignition switch at least 6 times within 10 seconds after Step 2.

4. Open and close the driver's door once within 10 seconds after Step 3.

5. The hazard warning flashers flash 3 times to indicate completion of the setting.

You may have the above settings done by your SUBARU dealer. Also, for models with a multi function display, the setting can be changed using the display. For details, refer to "Keyless buzzer volume setting" ☞3-78.

■ Replacing the battery

Refer to "Replacing key battery" ☞11-42.

■ Replacing lost transmitters

If you lose a transmitter or want to purchase additional transmitters (up to four can be programmed), your transmitters should be reprogrammed for security reasons. For details, contact your SUBARU dealer and have the transmitters programmed into the remote keyless entry system.

■ Certification for remote keyless entry system

▼ U.S.-spec. models

FCC ID: CWTWB1U811
FCC ID: CWTWD1U781

⚠ CAUTION

FCC WARNING

Changes or modifications not expressly approved by the party responsible for compliance could void the user's authority to operate the equipment.

NOTE

This device complies with part 15 of the FCC Rules. Operation is subject to the following two conditions: (1) This device may not cause harmful interference, and (2) this device must accept any interference received, including interference that may cause undesired operation.

▼ Canada-spec. models

NOTE

This device complies with Industry Canada's licence-exempt RSSs. Operation is subject to the following two conditions: (1) This device may not cause interference; and (2) This device must accept any interference, including interference that may cause undesired operation of the device.

REMARQUE

Le présent appareil est conforme aux CNR d'Industrie Canada applicables aux appareils radio exempts de licence. L'exploitation est autorisée aux deux conditions suivantes: (1) l'appareil ne doit pas produire de brouillage; (2) l'utilisateur de l'appareil doit accepter tout brouillage radioélectrique subi, même si le brouillage est susceptible d'en compromettre le fonctionnement.

203161

– CONTINUED –

▼ **Mexico-spec. models**

La operación de este equipo está sujeta a las siguientes dos condiciones:
(1) es posible que este equipo o dispositivo no cause interferencia perjudicial y
(2) este equipo o dispositivo debe aceptar cualquier interferencia, incluyendo la que pueda causar su operación no deseada.
202642

COFETEL RCPSUTW13-2221
COFETEL RLVSU8813-2140

Alarm system

The alarm system helps to protect your vehicle and valuables from theft. The horn sounds and the hazard warning flashers flash if someone attempts to break into your vehicle.

For models with "keyless access with push-button start system":
The system can be armed or disarmed with the keyless access function or access key.
The system will not be activated when the push-button ignition switch is in the "ACC" or "ON" position.

For models without "keyless access with push-button start system":
The system can be armed or disarmed with the remote transmitter.
The system will not be activated when the key is inserted into the ignition switch.

Your vehicle's alarm system has been set for activation at the time of shipment from the factory. You can set the system for deactivation yourself or have it done by your SUBARU dealer.

■ System operation

The alarm system will sound the following alarms when triggered.

- The vehicle's horn will sound for 30 seconds.
- The hazard warning flashers will flash for 30 seconds.

If any of the doors or the rear gate remains open after the 30-second period, the horn will continue to sound for a maximum of 3 minutes. If the door or the rear gate is closed while the horn is sounding, the horn will stop sounding with a delay of up to 30 seconds.

The alarm is triggered by:

- Opening any of the doors (including the rear gate)
- Physical impact to the vehicle, such as forced entry (only models with shock sensors (dealer option))

NOTE

The alarm system can be set to trigger the illumination of the following interior lights.

- **Map lights (models with moonroof)**
- **Dome light (illuminates only when the dome light switch is in the "DOOR" position)**
- **Cargo area light (illuminates only**

when the cargo area light switch is in the "DOOR" position)

The notifications regarding the map lights, dome light and cargo area light are deactivated as the factory setting. A SUBARU dealer can activate the system. Contact your SUBARU dealer for details.

■ Activating and deactivating the alarm system

To change the setting of your vehicle's alarm system for activation or deactivation, do the following.

1. Disarm the alarm system. Refer to "Disarming the system" ☞2-30.
2. Sit in the driver's seat and shut all doors and the rear gate.
3. Turn the ignition switch to the "ON" position.
4. Hold down the REAR (UNLOCK) side of the driver's power door locking switch, open the driver's door within the following 1 second, and wait 10 seconds without releasing the switch. The setting will then be changed as follows.

If the system was previously activated:

The odometer/trip meter screen displays as follows and the horn sounds twice, indicating that the system is now deactivated.

- "AL oF" (models with type A combination meter)
- "ALOF" (models with type B combination meter)

If the system was previously deactivated:

The odometer/trip meter screen displays as follows and the horn sounds once, indicating that the system is now activated.

- "AL on" (models with type A combination meter)
- "ALON" (models with type B combination meter)

NOTE

You may have the above setting change done by your SUBARU dealer.

■ If you have accidentally triggered the alarm system

▼ To stop the alarm

Do any of the following operations:

- Press any button on the access key/remote transmitter.
- Turn the ignition switch to the "ON" position (models without "keyless access with push-button start system").
- Turn the push-button ignition to the "ACC" position (models with "keyless access with push-button start system").

NOTE

Only registered keys will stop the alarm. If the immobilizer transponder is not registered, the alarm will not stop.

■ Arming the system

▼ Tips

- The system can be armed even if the engine hood, windows and/or moonroof are open. Always make sure that they are fully closed before arming the system.
- The 30-second standby time can be eliminated if you prefer. Have it performed by your SUBARU dealer.
- The system is in the standby mode for a 30-second period after locking the doors with the remote transmitter. The security indicator light will flash at short intervals during this period.
- If any of the following actions are done during the standby period, the system will not switch to the surveillance state.
  - Doors (including the rear gate) are unlocked using the access key/remote transmitter.
  - Doors (including the rear gate) are unlocked using the keyless access

– CONTINUED –

function (models with “keyless access with push-button start system”).

– Any door (including the rear gate) is opened.

– The ignition switch is turned to the “ON” position (models without “keyless access with push-button start system”).

– Push-button ignition switch is turned to the “ACC” position (models with “keyless access with push-button start system”).

▼ To arm the system using access key/remote transmitter

1. Close all windows and the moonroof (if equipped).
2. Remove the key from the ignition switch (models without “keyless access with push-button start system”)/turn the push-button ignition switch to the “OFF” position (models with “keyless access with push-button start system”).
3. Open the doors and get out of the vehicle.
4. Make sure that the engine hood is locked.
5. Close all doors (and the rear gate).

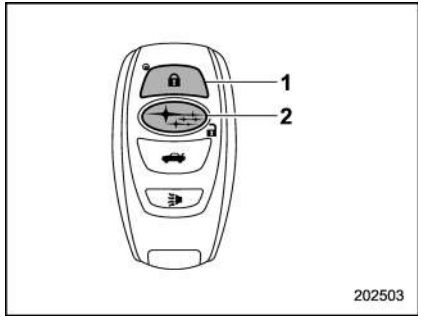

Access key

1) Arm button: Press to arm the system
2) Disarm button: Press to disarm the system

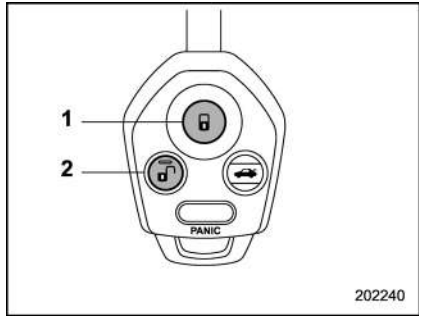

Transmitter

1) Arm button: Press to arm the system
2) Disarm button: Press to disarm the system

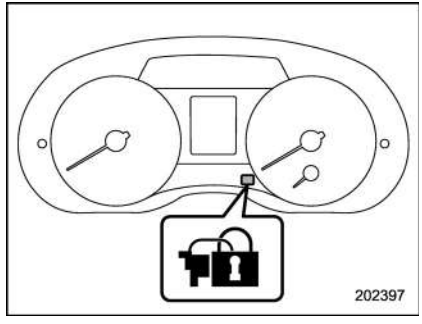

Security indicator light (type A)

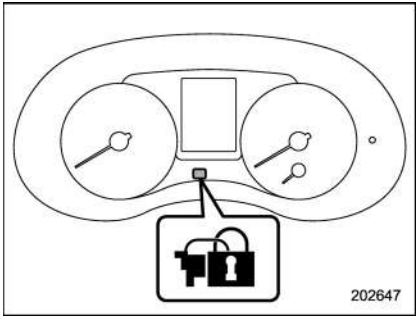

Security indicator light (type B)

6. Briefly press the "🔒" button (for less than 2 seconds). All doors (and the rear gate) will lock, an electronic chirp will sound once, the hazard warning flashers will flash once, and the security indicator light will start flashing rapidly. After rapid flashing for 30 seconds (standby time), the indicator lights will then flash slowly (twice approximately every 2 seconds), indicating that the system has been armed for surveillance.

If any of the doors, including the rear gate, is not fully closed, an electronic chirp sounds five times, the hazard warning flashers flash five times to alert you that the doors (or the rear gate) are not properly closed. When you close the door, the system will automatically arm and doors will automatically lock.

▼ To arm the system using power door locking switches

1. Close all windows.
2. Remove the key from the ignition switch (models without "keyless access with push-button start system")/turn the push-button ignition switch to the "OFF" position (models with "keyless access with push-button start system").
3. Open the doors and get out of the vehicle.
4. Make sure that the engine hood is locked.
5. Close the doors (and the rear gate) but leave only the driver's door or the front passenger's door open.

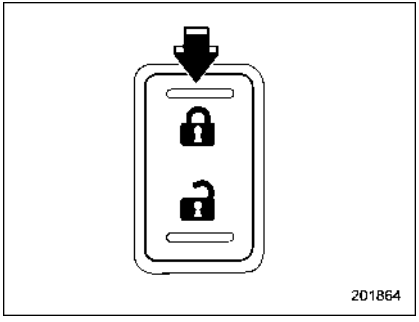

6. Press the front side ("LOCK" side) of the power door locking switch to set the door locks.
7. Close the door. An electronic chirp will sound once, the hazard warning flashers will flash once and the security indicator light will start flashing rapidly. After rapid flashing for 30 seconds (standby time), the indicator lights will then flash slowly (twice approximately every 2 seconds), indicating that the system has been armed for surveillance.

▼ To arm the system using the keyless access function (if equipped)

1. Close all windows and the moonroof (if equipped)
2. Turn the push-button ignition switch to the "OFF" position.
3. Open the doors and get out of the vehicle.
4. Make sure that the engine hood is locked.
5. Close all doors and the rear gate.

– CONTINUED –

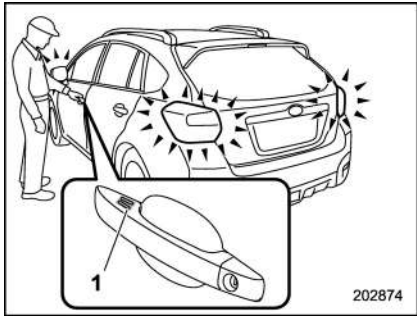

1) Door lock sensor

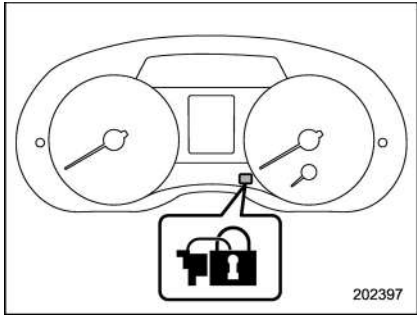

Security indicator light (type A)

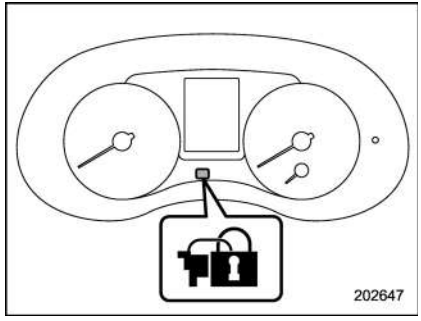

Security indicator light (type B)

6. Carry the access key and touch the door lock sensor. All doors (including the rear gate) will lock, an electronic chirp will sound once, the hazard warning flashers will flash once, and the security indicator light will start flashing rapidly. After rapid flashing for 30 seconds (standby time), the security indicator light will then flash slowly (twice approximately every 2 seconds), indicating that the system has been armed for surveillance.

If any of the doors or the rear gate is not fully closed, an electronic chirp sounds five times, the hazard warning flashers flash five times to alert you that the doors (or the rear gate) are not properly closed. When you close the door, the system will automatically arm and doors will automatically lock.

■ Disarming the system

Perform either of the following procedures.

- Briefly press the disarm button (for less than 2 seconds) on the access key/remote transmitter.
- Carry the access key and perform either of the following procedures (models with “keyless access with push-button start system”).
  - Grip the front door handle.
  - Press the rear gate opener button.

The following door(s) will unlock, an electronic chirp will sound twice and the hazard warning flashers will flash twice.

- Driver’s door: when either of the following procedures is performed
  - Press the disarm button on the access key/remote transmitter briefly (for less than 2 seconds).
  - Grip the driver’s door handle (models with “keyless access with push-button start system”).
- Rear gate: when pressing the rear gate opener button (models with “keyless access with push-button start system”)
- All doors: when gripping the front passenger’s door handle (models with “keyless access with push-button start system”)

The flashing of the security indicator light will then change slowly (once approximately every 3 seconds from twice approximately every 2 seconds), indicating that the alarm system has been disarmed.

To unlock all other doors and the rear gate, briefly press the disarm button a second time within 5 seconds.

▼ **Emergency disarming**

If you cannot disarm the system using the access key/transmitter (i.e. the transmitter is lost, broken or the transmitter battery is too weak), you can disarm the system without using the access key/remote transmitter.

The system can be disarmed if you turn the ignition switch from the "LOCK"/"OFF" to the "ON" position with a registered key/access key.

NOTE

For models with "keyless access with push-button start system", if the access key battery is discharged, perform the procedure described in "Switching power status" ☞9-17. In such a case, replace the battery immediately. Refer to "Replacing battery of access key" ☞11-42.

■ Valet mode

When you choose the valet mode, the alarm system does not operate. In valet mode, the remote transmitter is used only for locking and unlocking the doors and rear gate and panic activation.

To enter the valet mode, change the setting of your vehicle's alarm system for deactivation mode. Refer to "Activating and deactivating the alarm system" ☞2-27. The security indicator light will continue to flash once every 3 seconds indicating that the system is in the valet mode.

To exit valet mode, change the setting of your vehicle's alarm system for activation mode. Refer to "Activating and deactivating the alarm system" ☞2-27.

■ Passive arming (models without "keyless access with push-button start system")

▼ **Passive arming mode**

When passive arming mode has been programmed by the dealer, arming of the system is automatically accomplished without using the remote transmitter. Note that in this mode, DOORS MUST BE MANUALLY LOCKED.

▼ **To enter the passive mode**

If you wish to program the passive arming mode, have it done by your SUBARU dealer.

▼ **Arming the system**

⚠ CAUTION

In passive mode, the system will automatically activate the alarm but WILL NOT automatically lock the doors. In order to lock the doors you must either lock them as indicated in step 4 below or with the key once they have been closed. Failure to lock the doors manually will result in a higher security risk.

1. Turn the ignition switch to the "ON" position.

– CONTINUED –

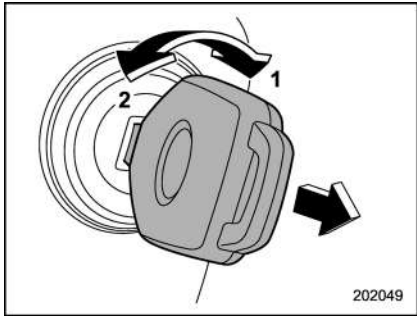

1) ON
2) LOCK

2. Turn the ignition switch from “ON” to “LOCK” position and remove the key from the ignition switch.

3. Open the doors and get out of the vehicle.

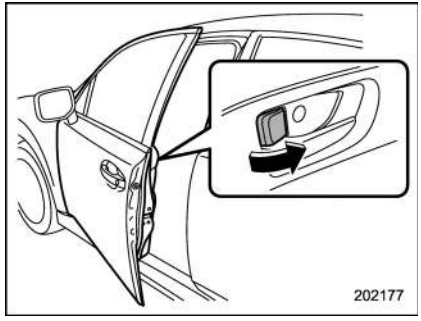

4. Before closing the doors, lock all doors with the inside door lock levers.

5. Close the doors. The system will automatically arm after 1 minute.

In the passive mode, the system can also be armed with the remote transmitter or with the power door locking switches. If the remote transmitter or power door locking switch is used to lock the vehicle, arming will take place immediately regardless of whether or not the passive mode has been selected.

▼ Disarming the system

To disarm the system, briefly press the “🔓” button on the transmitter.

■ Tripped sensor identification

The security indicator light flashes when the alarm system has been triggered. Also, the number of flashes indicates the location of unauthorized intrusion or the severity of impact on the vehicle.

When the ignition switch is turned to the “ON” position, the indicator light will light for 1 second and then flash as follows.

- When a door or the rear gate was opened: 5 times
- When the ignition switch was turned to the “ON” position: 3 times
- When a strong impact or multiple impacts were sensed: twice (only models with shock sensors (dealer option))
- When a light impact was sensed: once (only models with shock sensors (dealer option))

NOTE

Any of the above indicator light flashings will recur each time the ignition switch is turned to the “ON” position. Rearming the alarm system cancels the flashing.

■ Shock sensors (dealer option)

The shock sensors trigger the alarm system when they sense impacts applied to the vehicle and when any of their electric wires are cut. The alarm system causes the horn to sound and the hazard warning flashers to flash for a short time when the sensed impact is weak, but it warns of a strong impact or multiple impacts by sounding the horn and flashing the hazard warning flashers, both lasting approximately 30 seconds.

If you desire, your SUBARU dealer can connect them and set them for activation or deactivation.

NOTE

● The shock sensors are not always able to sense impacts caused by breaking in, and cannot sense an impact that does not cause vibration (such as breaking the glass using a rescue hammer).

● The shock sensors may sense vibration as indicated in the following examples and trigger the alarm system. Select the settings of the alarm system and shock sensors appropriately depending on where you usually park your vehicle.

Examples:

– Vibration from a construction site
– Vibration in a multistory car park
– Vibration from trains

● You can have the sensitivity of the shock sensors adjusted to your preference by your SUBARU dealer.

Child safety locks

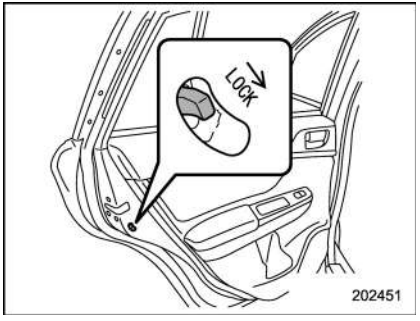

Each rear door has a child safety lock. When the child safety lock lever is in the lock position, the door cannot be opened from inside. The door can only be opened from the outside.

⚠ WARNING

Always turn the child safety locks to the “LOCK” position when children sit in the rear seat. Serious injury could result if a child accidentally opens the door and falls out.

Windows

⚠ WARNING

To avoid serious personal injury caused by entrapment, always conform to the following instructions without exception.

- **When operating the power windows, be extremely careful to prevent anyone's fingers, arms, neck, head or other objects from being caught in the window.**
- **Always lock the passengers' windows using the lock switch when children are riding in the vehicle.**
- **For safety reasons, always carry the key with you when leaving the vehicle and never allow an unattended child to remain in the vehicle. Failure to follow this procedure could result in injury to a child operating the power window.**

The power windows operate only when the ignition switch is in the "ON" position.

■ Power window operation by driver

▼ Driver's side power window switches

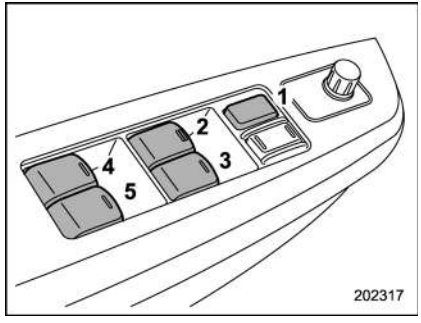

1) Lock switch
2) For driver's window (with one-touch auto up and down feature)
3) For front passenger's window
4) For rear left window
5) For rear right window

All door windows can be controlled by the power window switch cluster at the driver side door.

▼ Operating the driver's window

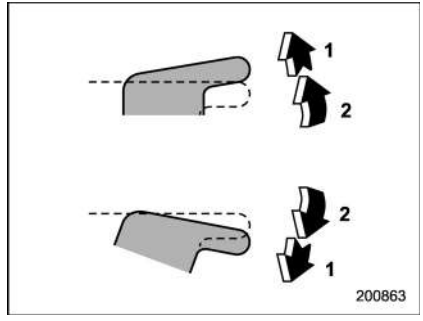

1) Automatically open/close
2) Open/close

To open:

Push the switch down lightly and hold it. The window will open as long as the switch is held.

This switch also has a one-touch auto down function. To open the window fully, push the switch down until it clicks and then release it. To stop the window halfway, pull the switch up lightly.

To close:

Pull the switch up lightly and hold it. The window will close as long as the switch is held.

This switch also has a one-touch auto up function. To close the window fully, pull the

switch up until it clicks and then release it. To stop the window halfway, push the switch down lightly.

NOTE

• If the vehicle's battery is disconnected due to situations such as battery or fuse replacement, the one-touch auto up/down function will be deactivated. Initialize the power window to reactivate the one-touch auto up/down function. Refer to "Initialization of power window" ☞2-37.

• When the following operations are performed, the power window breaker will operate and it may not be possible to open or close the window.

– After the driver's window is fully closed or fully opened, the switch is continuously operated in the same direction for a few seconds.

– After the windows for three or more seats are fully closed or fully opened, each switch is continuously operated in the same direction simultaneously for a few seconds.

In this case, after the breaker recovers, be sure to initialize the power windows. If they are not initialized, the one-touch auto up/down function will not operate. Refer to "Initialization of power window" ☞2-37.

▼ Anti-entrapment function

⚠ CAUTION

- **Never attempt to test this function using fingers, hands or other parts of your body.**
- **The anti-entrapment function may not operate properly if some object gets trapped just before the window fully closes.**

NOTE

• If a window detects an impact similar to that caused by trapping an object (for example, when the vehicle encounters a deep pothole), the anti-entrapment function may operate.

• The window cannot be operated for a few seconds after the anti-entrapment function operates.

• If the vehicle's battery is disconnected due to situations such as battery or fuse replacement, the anti-entrapment function is deactivated. Initialize the power window to reactivate the anti-entrapment function. Refer to "Initialization of power window" ☞2-37.

While closing the driver's window automatically, if the window senses a substantial enough object trapped between the window and the window frame, it automatically moves down slightly and stops.

– CONTINUED –

▼ Operating the passengers' windows

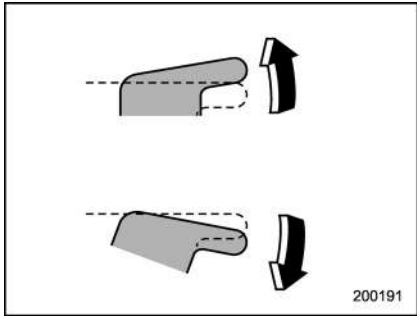

To open:
Push the appropriate switch down and hold it until the window reaches the desired position.

To close:
Pull the switch up and hold it until the window reaches the desired position.

▼ Locking the passengers' windows

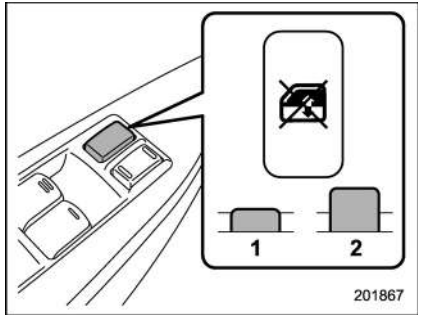

1) Lock
2) Unlock

To lock:
Press the lock switch. When the lock switch is in the lock position, the passengers' windows cannot be opened or closed.

To unlock:
Press the lock switch again.

■ Power window operation by passengers

▼ Passenger's side power window switches

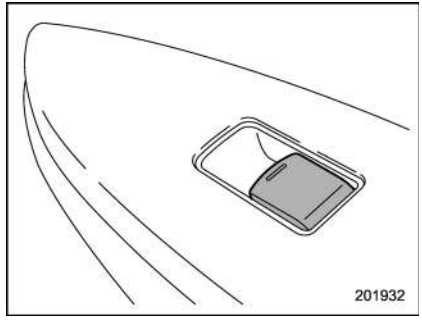

Each passenger window can be controlled by the power window switch located on the door.

▼ **Operating the windows**

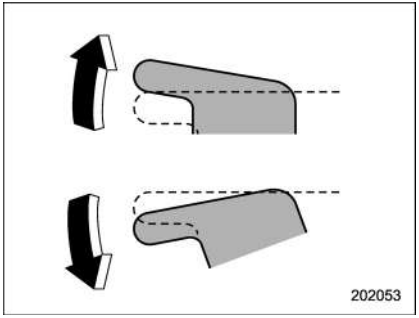

To open:
Press the switch down and hold it until the window reaches the desired position.

To close:
Pull the switch up and hold it until the window reaches the desired position.

When the lock switch on the power window switch cluster, located on the driver's side door, is in the lock position, the passengers' windows cannot be operated with the passengers' switches.

■ Initialization of power window

If the vehicle's battery is disconnected due to situations such as battery or fuse replacement, the following functions are deactivated.

- One-touch auto up/down function
- Anti-entrapment function

Initialize the power window using the following procedure to reactivate these functions.

1. Close the driver's door.
2. Turn the ignition switch to the "ON" position.
3. Open the driver's side window halfway by pushing down the power window switch.
4. Pull up the power window switch and close the window completely. Continue pulling up the switch for approximately 1 second after the window is closed completely.
5. Open the driver's side window completely by fully pushing down the power windows switch.

Rear gate

■ Lock/unlock

The rear gate can be locked and unlocked using any of the following systems.

- Power door locking switch: Refer to "Power door locking switches" ☞2-8.
- Keyless access with the push-button start system (if equipped): Refer to "Keyless access with push-button start system" ☞2-9.
- Remote keyless entry system: Refer to "Remote keyless entry system" ☞2-22.

NOTE

If the rear gate cannot be unlocked due to a discharged vehicle battery, a malfunction in the door locking/unlocking system or other causes, you can unlock it by manually operating the rear gate lock release lever.

For the procedure, refer to "Rear gate – if the rear gate cannot be opened" ☞9-18.

– CONTINUED –

■ Open/close

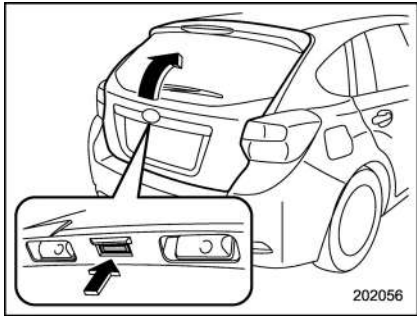

To open:
First unlock the rear gate lock then push the rear gate opener button.

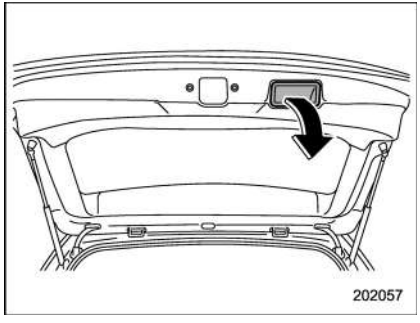

To close:
Lower the rear gate slowly and push down firmly until the latch engages.
The rear gate can be lowered easily if you pull it down holding the recessed grip.

⚠ WARNING

- **To prevent dangerous exhaust gas from entering the vehicle, always keep the rear gate closed while driving.**
- **Do not attempt to shut the rear gate while holding the recessed grip. Also avoid closing the rear gate by pulling on the recessed grip from inside the cargo space. There is a danger of your hand being caught and injured.**

⚠ CAUTION

- **Do not jam a plastic bag in or place cellophane tape on the rear gate stays or scratch the stays while loading or unloading cargo. That could cause leakage of gas from the stays, which may result in their inability to hold the rear gate open.**
- **Be careful not to hit your head or face on the rear gate when opening or closing the rear gate and when loading or unloading cargo.**

NOTE

If the rear gate cannot be unlocked due to a discharged vehicle battery, a malfunction in the door locking/unlocking system or other causes, you can unlock it by manually operating the rear gate lock release lever. For the procedure, refer to "Rear gate – if the rear gate cannot be opened" ☞9-18.

Moonroof (if equipped)

WARNING

Never let anyone's hands, arms, head or any objects protrude from the moonroof. A person could be seriously injured if any of the following conditions occur.

- **The vehicle stops suddenly.**
- **The vehicle turns sharply.**
- **The vehicle is involved in an accident.**
- **Body parts protruding from the vehicle are struck by outside objects.**

To avoid serious personal injury caused by entrapment, always conform to the following instructions without exception.

- **Before closing the moonroof, make sure that no one's hands, arms, head or other objects will be accidentally caught in the moonroof.**
- **Always carry the key when you leave the vehicle for safety reasons and never allow an unattended child to remain in the vehicle. Failure to follow this procedure could result in injury to a child operating the moonroof.**
- **Never try to check the anti-entrapment function by deliberately placing part of your body in the moonroof.**

CAUTION

- **Do not sit on the edge of the open moonroof.**
- **Do not operate the moonroof if falling snow or extremely cold conditions have caused it to freeze shut.**
- **The anti-entrapment function does not operate when the moonroof is being tilted down. Be sure to confirm that it is safe to do so before tilting the moonroof down.**
- **If the moonroof does not close, we recommend that you have the system checked by a SUBARU dealer.**

The moonroof has both tilting and sliding functions.

The moonroof operates only when the ignition switch is in the "ON" position.

■ Moonroof switches

▼ Tilting moonroof

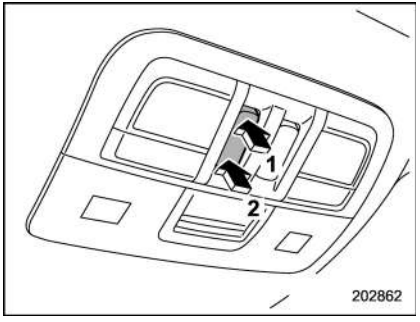

1) Raise
2) Lower

The tilting function is activated only when the moonroof is fully closed.

To raise:

Press the rear side of the "UP/DOWN" switch momentarily. The moonroof raises completely.

To lower:

Press and hold the front side of the "UP/DOWN" switch until the preferred position has reached.

– CONTINUED –

Release the switch after the moonroof has been raised or has been lowered completely. Pressing the switch continuously may cause damage to the moonroof.

▼ **Sliding moonroof**

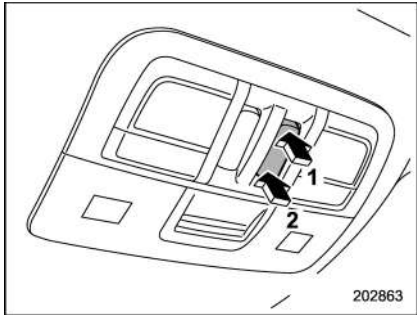

1) Open
2) Close

To open:

Press and hold the rear side of the "OPEN/CLOSE" switch. The sun shade will also be opened together with the moonroof. The moonroof will stop at a position approximately 1.6 in (4 cm) away from the fully opened position. Press and hold the rear side of the switch again to open the moonroof completely.

To close:

Press and hold the front side of the "OPEN/CLOSE" switch.

To stop the moonroof at a selected midway position while opening or closing it, momentarily push the switch to the "OPEN" side or "CLOSE" side.

After washing the vehicle or after it rains, wipe away water on the roof prior to opening the moonroof to prevent drops of water from falling into the passenger compartment.

NOTE

Driving with the moonroof fully open can cause an annoying sound to be generated at high speeds. If this occurs, use the moonroof at the initial stop position of 1.6 in (4 cm) away from the fully opened position.

▼ **Anti-entrapment function**

When the moonroof senses a substantial enough object trapped between its glass and the vehicle's roof during closure, it automatically moves back to the fully open position and stops there. The anti-entrapment function may also be activated by a strong shock on the moonroof even when there is nothing trapped.

⚠ CAUTION

Never attempt to test this function using fingers, hands or other parts of your body.

NOTE

For the sake of safety, it is recommended that you avoid driving with the moonroof fully opened.

■ Sun shade

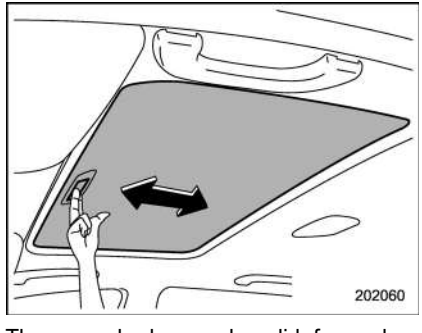

The sun shade can be slid forward or backward by hand while the moonroof is closed.

If the moonroof is opened, the sun shade also moves back.

Ignition switch (models without “keyless access with push-button start system”)..... 3-4
LOCK..... 3-4
ACC..... 3-5
ON..... 3-5
START..... 3-5
Key reminder chime..... 3-5
Ignition switch light (if equipped)..... 3-6
Push-button ignition switch (models with push-button start system)..... 3-6
Safety precautions..... 3-6
Operating range for push-button start system..... 3-6
Switching power status..... 3-7
When access key does not operate properly..... 3-8
Hazard warning flasher..... 3-8
Meters and gauges..... 3-9
Combination meter illumination..... 3-9
Canceling the function for meter/gauge needle movement upon turning on the ignition switch..... 3-9
Speedometer..... 3-10
Odometer..... 3-10
Double trip meter..... 3-10
Tachometer..... 3-11
Fuel gauge..... 3-12
ECO gauge (if equipped)..... 3-12
Warning and indicator lights..... 3-13
Initial illumination for system check..... 3-13
Seatbelt warning light and chime..... 3-14
SRS airbag system warning light..... 3-15
Front passenger’s frontal airbag ON and OFF indicators..... 3-16
CHECK ENGINE warning light/Malfunction indicator light..... 3-16
Coolant temperature low indicator light/Coolant temperature high warning light..... 3-17
Charge warning light..... 3-18
Oil pressure warning light..... 3-18
Engine low oil level warning light..... 3-18
Windshield washer fluid warning light..... 3-19
AT OIL TEMP warning light (CVT models)..... 3-19
Low tire pressure warning light (U.S.-spec. models)..... 3-19
ABS warning light..... 3-21
Brake system warning light (red)..... 3-21
Low fuel warning light..... 3-22
Hill start assist warning light/Hill start assist OFF indicator light..... 3-22
Door open warning light..... 3-23
All-Wheel Drive warning light (CVT models)..... 3-23
Power steering warning light..... 3-23
Vehicle Dynamics Control warning light/Vehicle Dynamics Control operation indicator light..... 3-24
Vehicle Dynamics Control OFF indicator light..... 3-25
Warning chimes and warning indicator of the keyless access with push-button start system (if equipped)..... 3-25
Security indicator light..... 3-30
Select lever/gear position indicator (CVT models)..... 3-30
Turn signal indicator lights..... 3-31
High beam indicator light..... 3-31

Cruise control indicator light (if equipped) 3-31
Cruise control set indicator light (if equipped)..... 3-31
Automatic headlight beam leveler warning light (models with HID headlights) 3-31
Front fog light indicator light 3-31
Headlight indicator light 3-32
Steering responsive fog lights warning indicator/ Steering responsive fog lights OFF indicator (models with EyeSight system)..... 3-32
BSD/RCTA warning indicator (if equipped) 3-32
BSD/RCTA OFF indicator (if equipped)..... 3-32
Information display (if equipped) 3-32
Outside temperature indicator 3-33
Driving information display..... 3-33
Clock..... 3-37
Multi information display (models with type B combination meter) 3-38
Basic operation..... 3-39
Welcome screen and Good-bye screen 3-39
Warning screen..... 3-39
Basic screens 3-39
Menu screens 3-40
Multi function display (if equipped) 3-42
Models without multi function display..... 3-42
Safety precautions 3-42
Features 3-43
Locations..... 3-43
Basic operation..... 3-43
Welcome screen..... 3-44
Date screen..... 3-44
Ending screen 3-44
Self-check screen 3-45
Interruption screen 3-46
Basic screens..... 3-46
Selection screen..... 3-53
Date and time settings 3-56
Image quality and volume settings 3-63
Screen settings..... 3-65
Maintenance settings 3-73
Driving history registration..... 3-76
Car settings..... 3-77
Initialize..... 3-85
Light control switch..... 3-88
Headlights 3-89
High/low beam change (dimmer) 3-90
Headlight flasher 3-91
Daytime running light system..... 3-91
Turn signal lever 3-92
One-touch lane changer..... 3-92
Illumination brightness control..... 3-92
Headlight beam leveler (if equipped) 3-93
Automatic headlight beam leveler (models with HID headlights)..... 3-93
Fog light switch 3-93
Steering responsive fog lights system (models with EyeSight system) 3-94
Wiper and washer..... 3-95
Windshield wiper and washer switches 3-96
Rear window wiper and washer switch 3-98
Mirrors 3-99
Inside mirror..... 3-99

Outside mirrors 3-99
Defogger and deicer 3-100
Tilt/telescopic steering wheel 3-102
Horn 3-102

Ignition switch (models without “keyless access with push-button start system”)

WARNING

- **Never turn the ignition switch to the “LOCK” position while the vehicle is being driven or towed because that will lock the steering wheel, preventing steering control. And when the engine is turned off, it takes a much greater effort than usual to steer.**
- **Before leaving the vehicle, always remove the key from the ignition switch for safety and never allow an unattended child to remain in the vehicle. Failure to follow this procedure could result in injury to a child or others. Children could operate the power windows, the moonroof or other controls or even make the vehicle move.**

CAUTION

Do not attach a large key holder or key case to either key. If it banged against your knees or hands while you are driving, it could turn the ignition switch from the “ON” position to the “ACC” or “LOCK” position, thereby stopping the engine. Also, if the key is attached to a key holder or to a large bunch of other keys, centrifugal force may act on it as the vehicle moves, resulting in unwanted turning of the ignition switch.

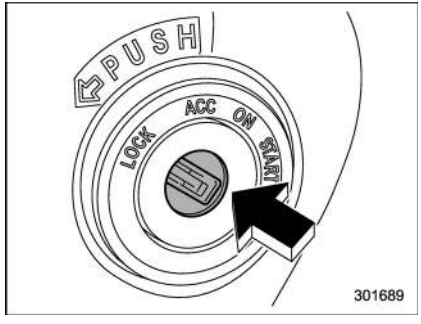

The ignition switch has four positions: LOCK, ACC, ON and START.

NOTE

- **Keep the ignition switch in the “LOCK” position when the engine is not running.**
- **Using electrical accessories for a long time with the ignition switch in the “ON” or “ACC” position can cause the battery to go dead.**
- **If the ignition switch will not move from the “LOCK” position to the “ACC” position, turn the steering wheel slightly to the left and right as you turn the ignition switch.**

■ LOCK

The key can only be inserted or removed in this position. The ignition switch will lock the steering wheel when you remove the key.

If turning the key is difficult, turn the steering wheel slightly to the right and left as you turn the key.

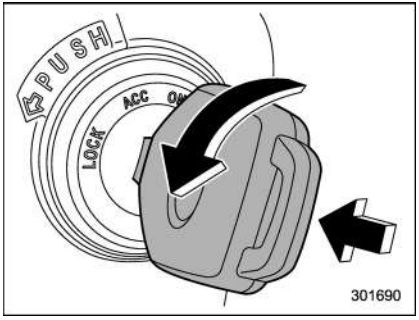

The key can be turned from the “ACC” to “LOCK” position only when the select lever is in the “P” position (CVT models) and the key is pushed in while turning it (all models).

■ ACC

In this position the electrical accessories (audio, accessory power outlet, etc.) can be used.

■ ON

This is the normal operating position after the engine is started.

■ START

The engine is started in this position. The starter cranks the engine to start it. When the key is released (after the engine has started), the key automatically returns to the “ON” position.

⚠ CAUTION

Do not turn the ignition switch to the “START” position while the engine is running.

If your registered key fails to start the engine, pull out the key once (the security indicator light will blink), and then insert the key into the ignition switch and turn it to the “START” position and again try to start the engine.

NOTE

The engine may not start in the following cases:

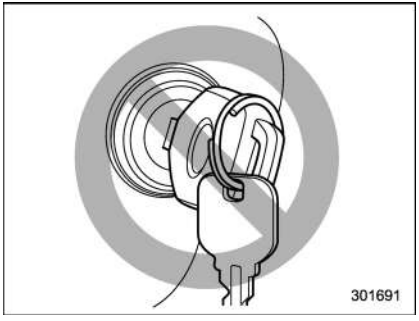

- **The key grip is touching another key or a metallic key holder.**

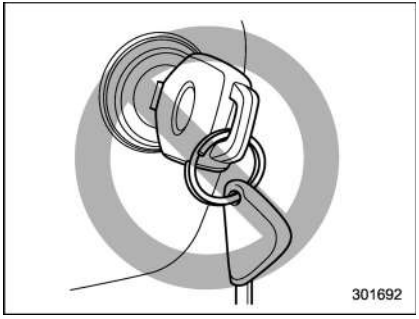

- **The key is near another key that contains an immobilizer transponder.**
- **The key is near or touching another transmitter.**

■ Key reminder chime

The reminder chime sounds when the driver’s door is opened and the ignition switch is in the “LOCK” or “ACC” position.

The chime stops under the following conditions.

- when the ignition switch is turned to the “ON” position
- when the key is removed from the ignition switch
- when the driver’s door is closed

– CONTINUED –

■ Ignition switch light (if equipped)

For easy access to the ignition switch in the dark, the ignition switch light illuminates when the driver's door is opened or when the driver's door is unlocked using the remote keyless entry transmitter.

The light remains illuminated for several tens of seconds and then gradually turns off under the following conditions.

- when the driver's door is closed
- when the doors are unlocked using the remote keyless entry transmitter

The light turns off immediately under the following conditions.

- when the ignition switch is turned to the "ON" position
- when all doors and the rear gate are locked using the remote keyless entry transmitter

Push-button ignition switch (models with push-button start system)

■ Safety precautions

Refer to "Safety precautions" ☞2-10.

■ Operating range for push-button start system

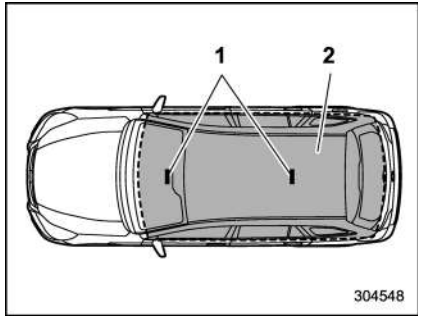

1) Antenna
2) Operating range

NOTE

- **If the access key is not detected within the operating range of the antennas inside the vehicle, the push-button ignition switch and the engine start cannot be operated.**
- **Even when the access key is outside the vehicle, if it is placed too close to the glass, it may be possible to switch the power or to start the engine.**
- **Do not leave the access key in the following places. It may become impossible to operate the push-button ignition switch and the engine start. It may also cause a false warning to issue although no malfunction actually occurs, or not to issue a warning when any malfunction occurs.**
  - **On the instrument panel**
  - **On the floor**
  - **Inside the glove box**
  - **Inside the door trim pocket**
  - **On the rear seat**
  - **In the cargo area**
- **When operating the push-button ignition switch or starting the engine, if the access key battery is discharged, perform the procedure described in "Access key – if access key does not operate properly" ☞9-17. In such a case, replace the battery immediately. Refer to "Replacing battery of access key" ☞11-42.**

■ Switching power status

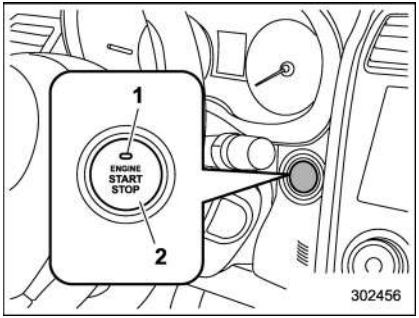

1) Operation indicator
2) Push-button ignition switch

The power status is switched every time the push-button ignition switch is pressed.

1. Carry the access key, and sit in the driver's seat.
2. Shift the select lever into the "P" position.
3. Press the push-button ignition switch without depressing the brake pedal. Every time the button is pressed, the power is switched in the sequence of "OFF", "ACC", "ON" and "OFF". When the engine is stopped and the push-button ignition switch is in "ACC" or "ON", the operation indicator on the push-button ignition switch illuminates in orange.

Power status	Indicator color	Operation
OFF	Turned off	Power is turned off.
ACC	Orange	The following systems can be used: audio and accessory power outlet.
ON	Orange (while engine is stopped)	All electrical systems can be used.
	Turned off (while engine is running)	

CAUTION

- **To prevent the vehicle battery from discharging, do not leave the push-button ignition switch in the "ON" or "ACC" position for a long time.**
- **To avoid a malfunction, observe the following precautions.**
  - **Do not spill drinks or other liquids on the push-button ignition switch.**
  - **Do not touch the push-button ignition switch with a hand that is soiled with oil or other contaminants.**
- **If the push-button ignition switch does not operate smoothly, stop the operation. Contact a SUBARU dealer immediately.**
- **If the push-button ignition switch does not illuminate even when the instrument panel illumination is turned on, have the vehicle inspected at a SUBARU dealer.**
- **If the vehicle was left in the hot sun for a long time, the surface of the push-button ignition switch may get hot. Be careful not to burn yourself.**

NOTE

- **When operating the push-button ignition switch, firmly press it all the way.**
- **If the push-button ignition switch is pressed quickly, the power may not turn on or off.**
- **If the indicator light on the push-button ignition switch flashes in green when the push-button ignition switch is pressed, steering is locked. When this occurs, press the push-button ignition switch while turning the steering wheel left and right.**

– CONTINUED –

▼ **Battery drainage prevention function**

When the push-button ignition switch is left in the “ACC” or “ON” position for approximately 1 hour, the push-button ignition switch will be automatically switched to “OFF” to prevent the battery from going dead. This function is activated when the select lever is in the “P” position.

■ When access key does not operate properly

Refer to “Access key – if access key does not operate properly” ☞9-17.

Hazard warning flasher

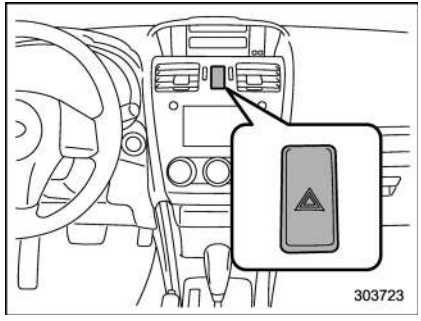

Models without multi function display

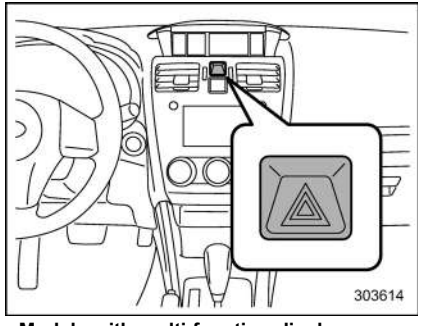

Models with multi function display

The hazard warning flasher is used to warn other drivers when you have to park your vehicle under emergency conditions. The hazard warning flasher works regardless of the position of the ignition switch.

To turn on the hazard warning flasher, push the hazard warning button on the instrument panel. All the turn signal lights and the turn signal indicator lights will flash. To turn off the flasher, push the button again.

NOTE

When the hazard warning flasher is on, the turn signals do not work.

Meters and gauges

NOTE

Some of the meters and gauges on the combination meter use liquid-crystal displays. You will find their indications hard to see if you wear polarized glasses.

■ Combination meter illumination

When the ignition switch is turned to the "ON" position, various parts of the combination meter will illuminate in the following sequence.

1. Warning lights, indicator lights, meter needles, gauge needles and liquid crystal display illuminate.
2. Meter and gauge indications each show MAX position.
3. Meter and gauge indications each show MIN position.
4. Regular illumination (for driving) begins.

■ Canceling the function for meter/gauge needle movement upon turning on the ignition switch

It is possible to activate or deactivate the movement of the meter needles and gauge needles that takes place when the ignition switch is turned to the "ON" position.

▼ Type A combination meter

To change the setting, perform the following procedure.

1. Turn the ignition switch to the "LOCK"/"OFF" or "ACC" position.

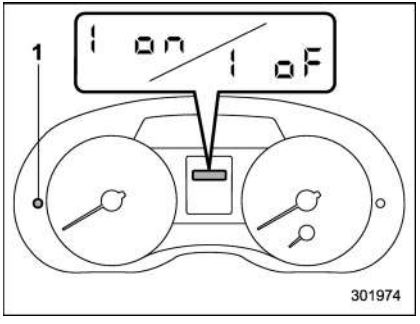

1) Trip knob

2. Press the trip knob to show "1 on" or "1 oF" on the trip meter display.

The display can be switched as shown in the following sequence by pressing the trip knob.

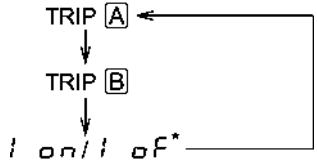

*: They cannot be displayed when the ignition switch is in the "ON" position.

To change the current setting, press the trip knob for at least 2 seconds.

1 on : Activated
1 oF : Deactivated

NOTE

- **Your vehicle's initial movement setting of the meter/gauge needles has been set for activation "1 on" at the time of shipment from the factory.**
- **It is not possible to change the initial movement setting of the meter/gauge needles when the ignition switch is in the "ON" position. Change the setting when the ignition switch is in the "LOCK"/"OFF" or "ACC" position.**

– CONTINUED –

▼ **Type B combination meter**

Perform the procedures described in “Gauge Initial Movement” ☞3-41.

■ Speedometer

The speedometer shows the vehicle speed.

■ Odometer

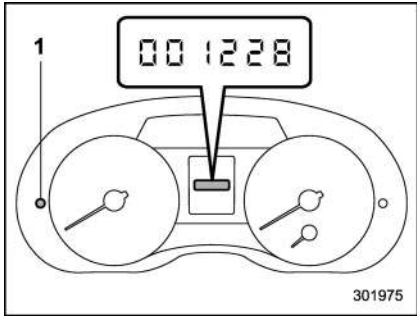

Type A
1) Trip knob

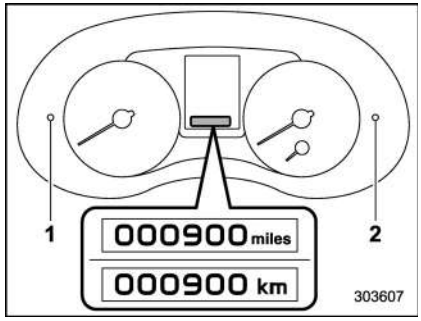

Type B
1) Trip knob (U.S.-spec. models)
2) Trip knob (except U.S.-spec. models)

This meter displays the odometer when the ignition switch is in the “ON” position.

The odometer shows the total distance that the vehicle has been driven.

If you press the trip knob when the ignition switch is in the “LOCK”/“OFF” or “ACC” position, the odometer/trip meter will light up. If you do not press the trip knob within 10 seconds of illumination of the odometer/trip meter, the odometer/trip meter will turn off.

Also, if you open and close the driver’s door within 10 seconds of illumination of the odometer/trip meter, the odometer/trip meter will turn off.

■ Double trip meter

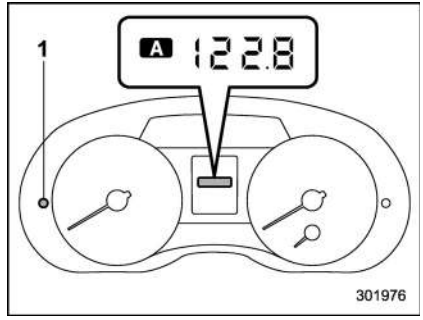

Type A
1) Trip knob

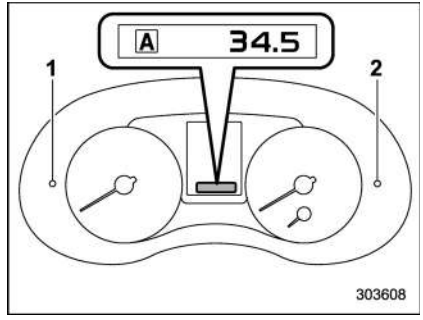

Type B
1) Trip knob (U.S.-spec. models)
2) Trip knob (except U.S.-spec. models)

This meter displays the two trip meters when the ignition switch is in the “ON” position.

The trip meter shows the distance that the vehicle has been driven since you last set it to zero.

If you press the trip knob when the ignition switch is in the “LOCK”/“OFF” or “ACC” position, the odometer/trip meter will light up. It is possible to switch between the A trip meter and B trip meter indications while the odometer/trip meter is lit up. If you do not press the trip knob within 10 seconds of illumination of the odometer/trip meter, the odometer/trip meter will turn off.

Also, if you open and close the driver’s door within 10 seconds of illumination of the odometer/trip meter, the odometer/trip meter will turn off.

The display can be switched as shown in the following sequence by pressing the trip knob.

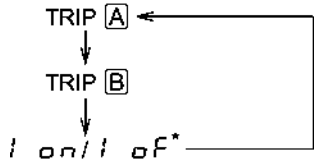

*: They cannot be displayed when the ignition switch is in the “ON” position.

To set the trip meter to zero, select the A trip or B trip meter by pressing the knob and keep the knob pressed for more than 2 seconds.

CAUTION

To ensure safety, do not attempt to change the function of the indicator during driving, as an accident could result.

NOTE

If the connection between the combination meter and battery is broken for any reason such as vehicle maintenance or fuse replacement, the data recorded on the trip meter will be lost.

■ Tachometer

The tachometer shows the engine speed in thousands of revolutions per minute.

CAUTION

Do not operate the engine with the pointer of the tachometer in the red zone. In this range, fuel injection will be cut by the engine control module to protect the engine from overrev-ving. The engine will resume running normally after the engine speed is reduced below the red zone.

NOTE

To protect the engine/transmission while the select lever is in the “P” or “N” position (for CVT models) or the shift lever is in the neutral position (for MT models), the engine is controlled so that the engine speed may not become too high even if the accelerator pedal is pressed hard.

– CONTINUED –

■ Fuel gauge

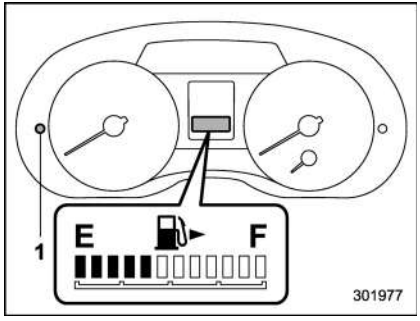

Fuel gauge (type A)
1) Trip knob

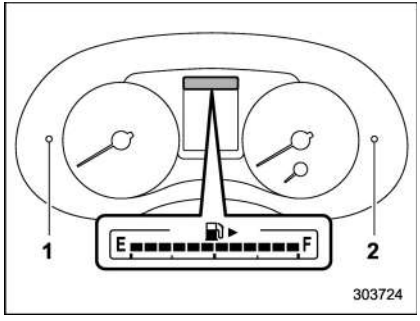

Fuel gauge (type B)
1) Trip knob (U.S.-spec. models)
2) Trip knob (except U.S.-spec. models)

The fuel gauge is displayed when the ignition is in the “ON” position, and it shows the approximate amount of fuel remaining in the tank.

The gauge indication may change slightly during braking, turning or acceleration due to fuel level movement in the tank.

If you press the trip knob while the ignition switch is in the “LOCK”/“OFF” or “ACC” position, the fuel gauge will light up and indicate the amount of fuel remaining in the tank. If, while the fuel gauge is indicating the amount of fuel remaining in the tank, you (a) do not press the trip knob for 10 seconds or (b) open and close the driver’s door, the fuel gauge indication will turn off.

NOTE

You will see the “⛽▶” sign in the fuel gauge. This indicates that the fuel filler door (lid) is located on the right side of the vehicle.

■ ECO gauge (if equipped)

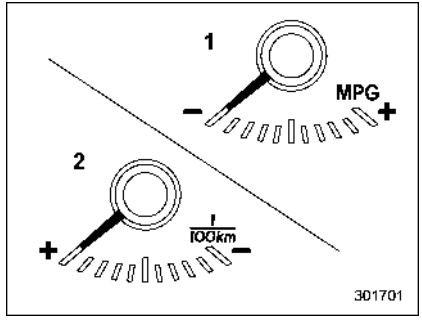

1) U.S.-spec. models
2) Except U.S.-spec. models

The ECO gauge shows the difference between the current rate of fuel consumption and the average rate of fuel consumption since the trip meter was last reset.

If the needle of the gauge moves towards the right side, this indicates better fuel efficiency.

NOTE

- **The ECO gauge shows only an approximate indication of fuel efficiency.**
- **After resetting the trip meter, the average rate of fuel consumption is not shown until driving 0.6 mile (1 km).**

Before that time, the ECO gauge does not operate.

Warning and indicator lights

■ Initial illumination for system check

Several of the warning and indicator lights illuminate when the ignition switch is initially turned to the “ON” position. This permits checking the operation of the bulbs.

Apply the parking brake and turn the ignition switch to the “ON” position. For the system check, the following lights illuminate and then turn off after several seconds or after the engine has started.

: Seatbelt warning light
(The seatbelt warning light turns off only when the driver fastens the seatbelt.)

PASSENGER: Front passenger’s seatbelt warning light
(The seatbelt warning light turns off only when the front seat passenger fastens the seatbelt.)

: SRS airbag system warning light

ON / : Front passenger’s frontal airbag ON indicator light

OFF / : Front passenger’s frontal airbag OFF indicator light

CHECK ENGINE: CHECK ENGINE warning light/Malfunction indicator light

: Coolant temperature low indicator light/Coolant temperature high warning light

: Charge warning light

: Oil pressure warning light

: Engine low oil level warning light (models with type A combination meter)

: Windshield washer fluid warning light (models with type A combination meter)

AT OIL TEMP: AT OIL TEMP warning light (CVT models)

: Low tire pressure warning light (U.S.- spec. models)

ABS / : ABS warning light

BRAKE / : Brake system warning light

: Low fuel warning light

: Hill start assist warning light/Hill start assist OFF indicator light

: Door open warning light

AWD: AWD warning light (CVT models)

– CONTINUED –

: Power steering warning light

: Vehicle Dynamics Control warning light/Vehicle Dynamics Control operation indicator light

: Vehicle Dynamics Control OFF indicator light

: Automatic headlight beam leveler warning light (models with HID headlights)

If any lights fail to illuminate, it indicates a burned-out bulb or a malfunction of the corresponding system.

Consult your authorized SUBARU dealer for repair.

■ Seatbelt warning light and chime

Your vehicle is equipped with a seatbelt warning device at the driver's and front passenger's seat, as required by current safety standards.

With the ignition switch turned to the "ON" position, this device reminds the driver and front passenger to fasten their seatbelts by illuminating the warning lights in the locations indicated in the following illustration and sounding a chime.

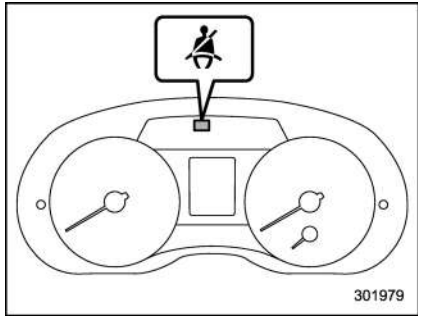

Driver's warning light (type A)

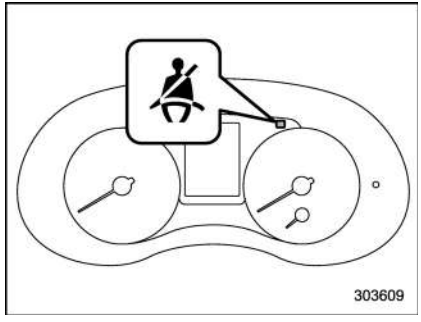

Driver's warning light (type B)

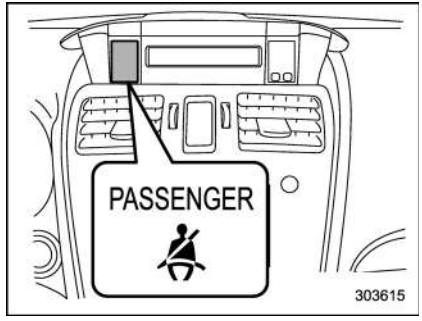

Front passenger's warning light

▼ Operation

If the driver and/or front passenger have/has not yet fastened the seatbelt(s) when the ignition switch is turned to the "ON" position, the seatbelt warning light(s) will flash for 6 seconds, to warn that the seatbelt(s) is/are unfastened. If the driver's seatbelt is not fastened, a chime will also sound simultaneously.

NOTE

- **If the driver's and/or front passenger's seatbelt(s) are/is still not fastened 6 seconds later, the seatbelt warning device operates as follows according to the vehicle speed.**
  - **At speeds lower than approximately 9 mph (15 km/h)**

The warning light(s) for unfastened seatbelt(s) will alternate between steady illumination and flashing at 15-second intervals. The chime will not sound.

– At speeds higher than approximately 9 mph (15 km/h)

The warning light(s) for unfastened seatbelt(s) will alternate between flashing and steady illumination at 15-second intervals and the chime will sound while the warning light(s) is/are flashing.

- **It is possible to cancel the warning operation that follows the 6-second warning after turning ON the ignition switch. When the ignition switch is turned ON next time, however, the complete sequence of the warning operation resumes. For further details about canceling the warning operation, please contact your SUBARU dealer.**

If there is no passenger on the front passenger's seat, the seatbelt warning device for the front passenger's seat will be deactivated. The front passenger's occupant detection system monitors whether or not there is a passenger on the front passenger's seat.

Observe the following precautions. Failure to do so may prevent the device from functioning correctly or cause the device to fail.

- Do not install any accessory such as a table or TV onto the seatback.
- Do not store a heavy load in the seatback pocket.
- Do not allow the rear seat occupant to place his/her hands or legs on the front passenger's seatback, or allow him/her to pull the seatback.
- Do not use front seats with their backward-forward position and seatback not being locked into place securely. If any of them are not locked securely, adjust them again. For adjusting procedure, refer to "Front seats" ☞1-2.

If the seatbelt warning device for the front passenger's seat does not function correctly (e.g., it is activated even when the front passenger's seat is empty or it is deactivated even when the front passenger has not fastened his/her seatbelt), take the following actions.

- Ensure that no article is placed on the seat other than a child restraint system and its child occupant, although we strongly recommend that all children sit in the rear seat properly restrained.
- Ensure that there is no article left in the seatback pocket.
- Ensure that the backward-forward position and seatback of front passenger's seat are locked into place securely by moving the seat back and forth.

If still the seatbelt warning device for front passenger's seat does not function correctly after taking relevant corrective actions described above, immediately contact your SUBARU dealer for an inspection.

■ SRS airbag system warning light

⚠ WARNING

If the warning light exhibits any of the following conditions, there may be a malfunction in the seatbelt pretensioners and/or SRS airbag system. Immediately take your vehicle to your nearest SUBARU dealer to have the system checked. Unless checked and properly repaired, the seatbelt pretensioners and/or SRS airbag will not operate properly in the event of a collision, which may increase the risk of injury.

- **Flashing or flickering of the warning light**
- **No illumination of the warning light when the ignition switch is first turned to the "ON" position**

– CONTINUED –

- **Continuous illumination of the warning light**
- **Illumination of the warning light while driving**

For details about the components monitored by the warning light, refer to “SRS airbag system monitors” ☞1-63.

■ Front passenger’s frontal airbag ON and OFF indicators

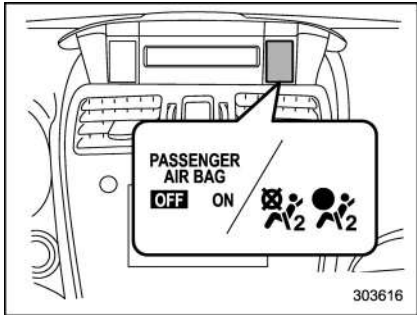

ON / : Front passenger’s frontal airbag ON indicator

OFF / : Front passenger’s frontal airbag OFF indicator

The front passenger’s frontal airbag ON and OFF indicators show you the status of the front passenger’s SRS frontal airbag.

The indicators are located next to the clock in the center portion of the dashboard.

When the ignition switch is turned to the “ON” position, both the ON and OFF indicators illuminate for 6 seconds during which time the system is checked. Following the system check, both indicators turn off for 2 seconds. After that, one of the indicators illuminates depending on the status of the front passenger’s SRS frontal airbag determined by the SUBARU advanced frontal airbag system monitoring.

If the front passenger’s SRS frontal airbag is activated, the passenger’s frontal airbag ON indicator will illuminate while the OFF indicator will remain off.

If the front passenger’s SRS frontal airbag is deactivated, the passenger’s frontal airbag ON indicator will remain off while the OFF indicator will illuminate.

With the ignition switch turned to the “ON” position, if both the ON and OFF indicators remain illuminated or off simultaneously even after the system check period, the system is malfunctioning. Contact your SUBARU dealer immediately for an inspection.

■ CHECK ENGINE warning light/Malfunction indicator light

CHECK ENGINE

⚠ CAUTION

If the CHECK ENGINE light illuminates while you are driving, have your vehicle checked/repaired by your SUBARU dealer as soon as possible. Continued vehicle operation without having the emission control system checked and repaired as necessary could cause serious damage, which may not be covered by your vehicle’s warranty.

If this light illuminates steadily or blinks while the engine is running, it may indicate that there is at least one problem or potential problem somewhere in the emission control system.

▼ If the light illuminates steadily

If the light illuminates steadily while driving or does not turn off after the engine starts, an emission control system malfunction has been detected.

You should have your vehicle checked by an authorized SUBARU dealer immediately.

NOTE

This light also illuminates when the fuel filler cap is not tightened until it clicks.

If you have recently refueled your vehicle, the cause of the CHECK ENGINE warning light/malfunction indicator light illuminating could be a loose or missing fuel filler cap. Remove the cap and retighten it until it clicks. Make sure nothing is interfering with the sealing of the cap. Tightening the cap will not make the CHECK ENGINE warning light turn off immediately. It may take several driving trips. If the light does not turn off, take your vehicle to your authorized SUBARU dealer immediately.

▼ If the light is blinking

If the light is blinking while driving, an engine misfire condition has been detected which may damage the emission control system.

To prevent serious damage to the emission control system, you should do the following.

- Reduce vehicle speed.
- Avoid hard acceleration.
- Avoid steep uphill grades.
- Reduce the amount of cargo, if possible.
- If towing a trailer, stop doing so as soon as possible.

The CHECK ENGINE warning light may stop blinking and illuminate steadily after several driving trips. You should have your vehicle checked by an authorized SUBARU dealer immediately.

■ Coolant temperature low indicator light/Coolant temperature high warning light

⚠ CAUTION

- **After turning the ignition switch to the "ON" position, if this indicator light/warning light behaves in any of the following ways, the electrical system may be malfunctioning. Contact your SUBARU dealer immediately for an inspection.**
  - **It remains blinking in RED.**
  - **It remains illuminated in RED for more than 2 seconds.**
  - **It remains blinking in RED and BLUE alternately.**
- **While driving, if this indicator light/warning light behaves in any of the following ways, take the specified appropriate measure listed below.**
  - **Blinking or illuminated in RED:**
    Safely stop the vehicle as soon as possible, and refer to the emergency steps to take in the case of engine overheating. After that, have the system checked by your nearest SUBARU dealer. Refer to "Engine overheating" ☞9-12.
  - **Blinking in RED and BLUE alternately:**
    The electrical system may be malfunctioning. Contact your SUBARU dealer for an inspection.

This coolant temperature low indicator light/coolant temperature high warning light has the following three functions.

- Illumination in **BLUE** indicates insufficient warming up of the engine
- Blinking in **RED** indicates that the engine is close to overheating
- Illumination in **RED** indicates overheating condition of the engine

For a system check, this indicator light/warning light illuminates in **RED** for approximately 2 seconds when the ignition switch is turned to the "ON" position.

– CONTINUED –

After that, this indicator light/warning light changes to **BLUE** and maintains illumination in **BLUE**. This **BLUE** illuminated light turns off when the engine is warmed up sufficiently.

If the engine coolant temperature increases over the specified range, the indicator light/warning light blinks in **RED**. At this time, the engine is close to overheating.

If the engine coolant temperature increases further, the indicator light/warning light illuminates in **RED** continuously. At this time, the engine may be overheating.

When the indicator light/warning light blinks in **RED** or illuminates in **RED**, safely stop the vehicle as soon as possible, and refer to the emergency steps to take in the case of engine overheating. Refer to "Engine overheating" ☞9-12. After that, have the system checked by your nearest SUBARU dealer.

Also, if the indicator light/warning light often blinks in **RED**, the electrical system may be malfunctioning. Contact your SUBARU dealer for an inspection.

NOTE

If the engine is restarted after a certain driving condition, this indicator light/warning light may illuminate in RED. However, this is not a malfunction if the indicator light/warning light turns off after a short time.

■ Charge warning light

If this light illuminates when the engine is running, it may indicate that the charging system is not working properly.

If the light illuminates while driving or does not turn off after the engine starts, stop the engine at the first safe opportunity and check the alternator belt. If the belt is loose, broken or if the belt is in good condition but the light remains illuminated, contact your nearest SUBARU dealer immediately.

■ Oil pressure warning light

If this light illuminates when the engine is running, it may indicate that the engine oil pressure is low and the lubricating system is not working properly.

If the light illuminates while driving or does not turn off after the engine starts, stop the engine at the first safe opportunity and check the engine oil level. If the oil level is low, add oil immediately. If the engine oil is at the proper level but the light remains illuminated, contact your nearest SUBARU dealer immediately.

For details about checking the engine oil level or adding the engine oil, refer to "Engine oil" ☞11-8.

CAUTION

Do not operate the engine with the oil pressure warning light illuminated. This may cause serious engine damage.

■ Engine low oil level warning light

This light illuminates when the engine oil level decreases to the lower limit.

If the engine low oil level warning light illuminates while driving, park the vehicle in a safe and level location, and then check the engine oil level. When the engine oil level is not within the normal range, refill with engine oil. Refer to "Engine oil" ☞11-8.

If the warning light does not turn off after refilling the engine oil, or the warning light illuminates even though the engine oil level is within the normal range, have the vehicle checked by a SUBARU dealer.

NOTE

- **After replacing or adding the engine oil, if the engine oil level is within the normal range when restarting the engine on a level surface, the warning light will turn off.**
- **The warning light may illuminate temporarily in the following conditions because a low oil level may be detected as a result of significant oil movement in the engine.**
  - **– when the vehicle is considerably inclined on an uphill or steep slope**
  - **– when the vehicle has continuously accelerated and decelerated**
  - **– when the vehicle is continuously turned**
  - **– when the vehicle is driven on a road that alternates continuously between uphill and downhill**

■ Windshield washer fluid warning light

This light illuminates when the fluid level in the windshield washer fluid tank decreases to the lower limit (approximately 1.1 US qt, 1.0 liter, 0.9 Imp qt).

■ AT OIL TEMP warning light (CVT models)

If this light illuminates when the engine is running, it may indicate that the transmission fluid temperature is too hot.

If the light illuminates while driving, immediately stop the vehicle in a safe place and let the engine idle until the warning light turns off.

▼ Transmission control system warning

If the “AT OIL TEMP” warning light flashes after the engine has started, it may indicate that the transmission control system is not working properly. Contact your nearest SUBARU dealer for service immediately.

■ Low tire pressure warning light (U.S.-spec. models)

When the ignition switch is turned to the “ON” position, the low tire pressure warning light will illuminate for approximately 2 seconds to check that the tire pressure monitoring system (TPMS) is functioning properly. If there is no problem and all tires are properly inflated, the light will turn off.

Each tire, including the spare (if provided), should be checked monthly when cold and inflated to the inflation pressure recommended by the vehicle manufacturer on the vehicle placard or tire inflation pressure label. (If your vehicle has tires of a different size than the size indicated on the vehicle placard or tire inflation pressure label, you should determine the proper tire inflation pressure for those tires.)

As an added safety feature, your vehicle has been equipped with a tire pressure monitoring system (TPMS) that illuminates a low tire pressure telltale when one or more of your tires is significantly underinflated. Accordingly, when the low tire pressure telltale illuminates, you should stop and check your tires as soon as possible, and inflate them to the proper pressure. Driving on a significantly underinflated tire causes the tire to overheat and can lead to tire failure. Under-inflation also reduces fuel efficiency and tire tread life, and may affect the vehicle’s handling and stopping ability.

Please note that the TPMS is not a substitute for proper tire maintenance, and it is the driver’s responsibility to maintain correct tire pressure, even if under-inflation has not reached the level to trigger illumination of the TPMS low tire pressure telltale.

– CONTINUED –

Your vehicle has also been equipped with a TPMS malfunction indicator to indicate when the system is not operating properly. The TPMS malfunction indicator is combined with the low tire pressure telltale. When the system detects a malfunction, the telltale will flash for approximately one minute and then remain continuously illuminated. This sequence will continue upon subsequent vehicle start-ups as long as the malfunction exists. When the malfunction indicator is illuminated, the system may not be able to detect or signal low tire pressure as intended. TPMS malfunctions may occur for a variety of reasons, including the installation of replacement or alternate tires or wheels on the vehicle that prevent the TPMS from functioning properly. Always check the TPMS malfunction telltale after replacing one or more tires or wheels on your vehicle to ensure that the replacement or alternate tires and wheels allow the TPMS to continue to function properly.

Should the warning light illuminate steadily after blinking for approximately one minute, have the system inspected by your nearest SUBARU dealer as soon as possible.

WARNING

If this light does not illuminate briefly after the ignition switch is turned ON or the light illuminates steadily after blinking for approximately one minute, you should have your Tire Pressure Monitoring System checked at a SUBARU dealer as soon as possible.

If this light illuminates while driving, never brake suddenly. Instead, perform the following procedure. Otherwise an accident involving serious vehicle damage and serious personal injury could occur.

1) **Keep driving straight ahead while gradually reducing speed.**
2) **Slowly pull off the road to a safe place.**

If this light still illuminates while driving after adjusting the tire pressure, a tire may have significant damage and a fast leak that causes the tire to lose air rapidly. If you have a flat tire, replace it with a spare tire as soon as possible.

When a spare tire is mounted or a wheel rim is replaced without the original pressure sensor/transmitter being transferred, the Low tire pressure warning light will illuminate steadily after blinking for approximately one minute. This indicates the TPMS is unable to monitor all four road wheels. Contact your SUBARU dealer as soon as possible for tire and sensor replacement and/or system resetting.

If the light illuminates steadily after blinking for approximately one minute, promptly contact a SUBARU dealer to have the system inspected.

CAUTION

The tire pressure monitoring system is NOT a substitute for manually checking tire pressure. The tire pressure should be checked periodically (at least monthly) using a tire gauge. After any change to tire pressure(s), the tire pressure monitoring system will not re-check tire inflation pressures until the vehicle is first driven more than 20 mph (32 km/h). After adjusting the tire pressures, increase the vehicle speed to at least 20 mph (32 km/h) to start the TPMS re-checking of the tire inflation pressures. If the tire pressures are now above the severe low pressure threshold, the low tire

pressure warning light should turn off a few minutes later. Therefore, be sure to install the specified size for the front and rear tires.

■ ABS warning light ABS / (ABS)

CAUTION

- **If any of the following conditions occur, we recommend that you have the ABS repaired at the first available opportunity by your SUBARU dealer.**
  - **The warning light does not illuminate when the ignition switch is turned to the "ON" position.**
  - **The warning light illuminates when the ignition switch is turned to the "ON" position, but it does not turn off even when the vehicle speed exceeds approximately 25 mph (40 km/h).**
  - **The warning light illuminates during driving.**
- **When the warning light is on (and the brake system warning light is off), the ABS function shuts down. However, the conventional brake system continues to operate normally.**

The ABS warning light illuminates together with the brake system warning light if the EBD system malfunctions. For further details of the EBD system malfunction warning, refer to "Electronic Brake Force Distribution (EBD) system warning" ☞3-22.

NOTE

If the warning light behavior is as described in the following conditions, the ABS may be considered normal.

- **The warning light illuminates when the ignition switch is turned to the "ON" position and turns off approximately 2 seconds after the engine has started.**
- **The warning light illuminates right after the engine is started but turns off immediately, remaining off.**
- **The warning light remains illuminated after the engine has been started, but it turns off when the vehicle speed reaches approximately 25 mph (40 km/h).**
- **The warning light illuminates during driving, but it turns off immediately and remains off.**

When driving with an insufficient battery voltage such as when the engine is jump started, the ABS warning light may illuminate. This is due to the low battery voltage and does not indicate a malfunction. When the battery becomes fully charged, the light will turn off.

■ Brake system warning light (red) BRAKE / (!)

The light illuminates with the parking brake applied while the ignition switch is in the "ON" position. It turns off when the parking brake is fully released.

WARNING

- **Driving with the brake system warning light on is dangerous. This indicates your brake system may not be working properly. If the light remains illuminated, have the brakes inspected by a SUBARU dealer immediately.**
- **If at all in doubt about whether the brakes are operating properly, do not drive the vehicle. Have your vehicle towed to the nearest SUBARU dealer for repair.**

The brake system warning light has the following functions.

– CONTINUED –

▼ **Brake fluid level warning**

This light illuminates when the brake fluid level has dropped to near the “MIN” level of the brake fluid reservoir with the ignition switch in the “ON” position and with the parking brake fully released.

If the brake system warning light should illuminate while driving (with the parking brake fully released and with the ignition switch positioned in “ON”), it could be an indication of leaking of brake fluid or worn brake pads. If this occurs, immediately stop the vehicle at the nearest safe location and check the brake fluid level. If the fluid level is below the “MIN” mark in the reservoir, do not drive the vehicle. Have the vehicle towed to the nearest SUBARU dealer for repair.

▼ **Electronic Brake Force Distribution (EBD) system warning**

The brake system warning light also illuminates if a malfunction occurs in the EBD system. In that event, it illuminates together with the ABS warning light.

The EBD system may be malfunctioning if the brake system warning light and ABS warning light illuminate simultaneously during driving.

Even if the EBD system fails, the conventional braking system will still function. However, the rear wheels will be more prone to locking when the brakes are applied harder than usual and the vehicle’s motion may therefore become somewhat harder to control.

If the brake system warning light and ABS warning light illuminate simultaneously, take the following steps.

1. Stop the vehicle in the nearest safe, flat location.
2. Shut down the engine, apply the parking brake and then restart it.
3. Release the parking brake. Even if both warning lights turn off, the EBD system may be malfunctioning. Drive carefully to the nearest SUBARU dealer and have the system inspected.
4. If both warning lights illuminate again and remain illuminated after the engine has been restarted, shut down the engine again, apply the parking brake, and check the brake fluid level.
5. If the brake fluid level is not below the “MIN” mark, the EBD system may be malfunctioning. Drive carefully to the nearest SUBARU dealer and have the system inspected.
6. If the brake fluid level is below the “MIN” mark, DO NOT drive the vehicle. Instead, have the vehicle towed to the nearest SUBARU dealer for repair.

■ Low fuel warning light

The low fuel warning light illuminates when the tank is nearly empty, at approximately 2.6 US gal (10.0 liters, 2.2 Imp gal). It only operates when the ignition switch is in the “ON” position.

⚠ CAUTION

Promptly put fuel in the tank whenever the low fuel warning light illuminates. Engine misfires as a result of an empty tank could cause damage to the engine.

NOTE

This light does not turn off unless the tank is replenished up to an internal fuel quantity of approximately 4.5 US gal (17 liters, 3.7 Imp gal).

■ Hill start assist warning light/Hill start assist OFF indicator light

▼ **Hill start assist warning light**

While the engine is running, if there are any malfunctions in the Hill start assist system, the warning light will illuminate.

WARNING

When the Hill start assist warning light illuminates, have the vehicle inspected at an authorized SUBARU dealer.

▼ **Hill start assist OFF indicator light**

While the Hill start assist system is deactivated, the Hill start assist OFF indicator light illuminates continuously to inform the driver that the Hill start assist system is not operational.

■ Door open warning light

The warning light illuminates if any door (including the rear gate) is not fully closed. This function is effective even if the ignition switch is in the “LOCK”/“OFF” or “ACC” position, or the key is removed from the ignition switch.

Always make sure this light is not illuminated before you start to drive.

■ All-Wheel Drive warning light (CVT models)

This light blinks if the vehicle is driven with tires of differing diameters fitted on the wheels or with an excessively low air pressure in any of the tires.

WARNING

If the AWD warning light flashes, promptly park in a safe location then check whether all four tires are the same diameter and whether any of the tires has a puncture or has lost air pressure for some other reason. Continuing to drive with the AWD warning light flashing can lead to powertrain damage.

■ Power steering warning light

This warning light illuminates when the ignition switch is turned to the “ON” position and turns off after the engine has started. This indicates that the warning system is working properly.

While the engine is running, this warning light illuminates when a malfunction has been detected in the electric power steering system.

CAUTION

When the power steering warning light is illuminated, there may be more resistance when the steering wheel is operated. Drive carefully to the nearest SUBARU dealer and have the vehicle inspected immediately.

NOTE

If the steering wheel is operated in the following ways, the power steering control system may temporarily limit the power assist in order to prevent the system components, such as the control computer and drive motor, from overheating.

- **The steering wheel is operated frequently and turned sharply while the vehicle is maneuvered at extremely low speeds, such as while frequently turning the steering wheel during parallel parking.**
- **The steering wheel remains in the fully turned position for a long period of time.**

At this time, there will be more resistance when steering. However this is not a malfunction. Normal steering force will be restored after the steering wheel is not operated for a while and the power steering control system has an opportunity to cool down. However, if the power steering is operated in a non-standard way which causes power

– CONTINUED –

assist limitation to occur too frequently, that may result in a malfunction of the power steering control system.

■ Vehicle Dynamics Control warning light/ Vehicle Dynamics Control operation indicator light

▼ Vehicle Dynamics Control warning light

⚠ CAUTION

The Vehicle Dynamics Control system provides its ABS control through the electrical circuit of the ABS. Accordingly, if the ABS is inoperative, the Vehicle Dynamics Control system becomes unable to provide ABS control. As a result, the Vehicle Dynamics Control system also becomes inoperative, causing the warning light to illuminate. Although both the Vehicle Dynamics Control system and ABS are inoperative in this case, the ordinary functions of the brake system are still available. You will be safe while driving with this condition, but drive carefully and have your vehicle checked at a SUBARU dealer as soon as possible.

NOTE

- **If the electrical circuit of the Vehicle Dynamics Control system itself malfunctions, the warning light only illuminates. At this time, the ABS (Anti-lock Brake System) remains fully operational.**
- **The warning light illuminates when the electronic control system of the ABS/Vehicle Dynamics Control system malfunctions.**

The Vehicle Dynamics Control system is probably inoperative under any of the following conditions. Have your vehicle checked at a SUBARU dealer immediately.

- The warning light does not illuminate when the ignition switch is turned to the “ON” position.
- The warning light illuminates while the vehicle is running.

NOTE

If the warning light behavior is as described in the following examples, the Vehicle Dynamics Control system may be considered normal.

- **The warning light illuminates when the ignition switch is turned to the “ON” position and turns off approximately 2 seconds after the engine has started.**
- **The warning light illuminates right after the engine is started but turns off immediately, remaining off.**
- **The warning light illuminates after the engine has started and turns off while the vehicle is subsequently being driven.**
- **The warning light illuminates during driving, but it turns off immediately and remains off.**
- **The warning light illuminates when the engine has stalled and continues to illuminate after the engine has been restarted. However, it will turn off once the vehicle starts moving.**

▼ **Vehicle Dynamics Control operation indicator light**

The indicator light flashes during activation of the skid suppression function and during activation of the traction control function.

NOTE

- **The light may remain illuminated for a short period of time after the engine has been started, especially in cold weather. This does not indicate the existence of a problem. The light should turn off as soon as the engine has warmed up.**
- **The indicator light illuminates when the engine has developed a problem and the CHECK ENGINE warning light/ malfunction indicator light is on.**

The Vehicle Dynamics Control system is probably malfunctioning under the following condition. Have your vehicle checked at a SUBARU dealer as soon as possible.

- The light does not turn off even after the lapse of several minutes (the engine has warmed up) after the engine has started.

■ Vehicle Dynamics Control OFF indicator light

The light illuminates when the Vehicle Dynamics Control OFF switch is pressed to deactivate the Vehicle Dynamics Control system.

The Vehicle Dynamics Control system is probably malfunctioning under any of the following conditions. Have your vehicle checked at a SUBARU dealer immediately.

- The light does not illuminate when the ignition switch is turned to the “ON” position.
- The light does not turn off even once several seconds have elapsed after the ignition switch has been turned to the “ON” position.

■ Warning chimes and warning indicator of the keyless access with push-button start system (if equipped)

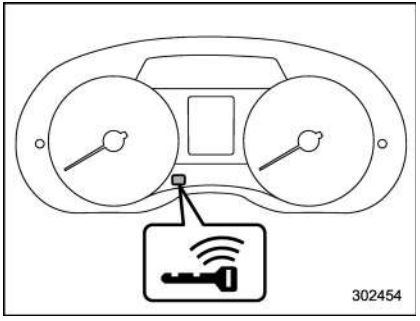

Access key warning indicator (type A)

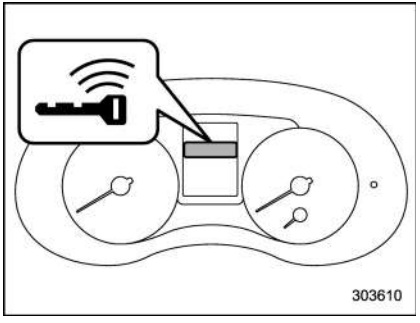

Access key warning indicator (type B)

– CONTINUED –

The warning chime and the access key warning indicator are used for the following purposes.

- Minimizing improper operations when using the keyless access with push-button start system
- Helping protect your vehicle from theft

When the warning chime sounds and/or the warning indicator flashes, take the appropriate action.

WARNING

Never drive the vehicle if the indicator on the push-button ignition switch is flashing in green when starting the engine. This indicates the status that the steering wheel is not released and could result in an accident involving serious injury or death.

CAUTION

- **When starting the engine again after the operation indicator on the push-button ignition switch flashes in green, if the operation indicator is still flashing in green, there could be a steering lock malfunction. Contact your SUBARU dealer as soon as possible.**
- **When the operation indicator on the push-button ignition switch flashes in orange, contact a SUBARU dealer immediately.**

NOTE

- **Even when the access key is within the operating ranges inside the vehicle, the access key warning for engine start may be provided depending on the status of the access key and the environmental conditions.**
- **When the access key is taken out of the vehicle through an open window, the access key takeout warning or passenger access key takeout warning will not be provided.**

▼ List of warnings

CAUTION

When any of the following warnings occurs even if the access key warning indicator does not appear, take the appropriate action.

Inside warning chime	Outside warning chime	Access key warning indicator on meter	Operation indicator on push-button ignition switch	Status	Action
Ding, ding ... (intermittent)	—	—	—	The driver's door is opened while the push-button ignition switch is "ACC" and the select lever is in the "P" position.	Switch the push-button ignition switch to "OFF", or close the driver's door. *When exiting the vehicle, be sure to switch the push-button ignition switch to "OFF".
				The push-button ignition switch is switched to "OFF" while the driver's door is open.	Close the driver's door.
Ding	Short beep (2 seconds)	—	—	**Lockout warning:** An attempt is made to lock all doors while the access key is left inside the vehicle.	Take out the access key from the vehicle, and lock the doors. *The doors cannot be locked while the access key is inside the vehicle. *A chirp sound will be heard, and all doors will be unlocked.
—	Short beep (2 seconds)	—	—	**Access key lock-in warning:** The door lock sensor is touched while the push-button ignition switch is "OFF" and the access key is inside the vehicle.	Take out the access key from the vehicle, and lock the doors. *If the access key is inside the vehicle, the doors cannot be locked.
—	Beep, beep, beep, beep, beep (5 times)	—	—	**Door ajar warning:** The door lock sensor is touched while the ignition switch is in the "OFF" position and one of the doors including the rear gate is opened.	Close the doors securely and lock them. *If one of the doors including the rear gate is opened, the doors cannot be locked.
Ding	Long beep (60 seconds max.)	—	—	**Power warning:** The door lock sensor is touched while you are carrying the access key, the push-button ignition switch is in a position other than "OFF" and the select lever is in the "P" position.	Return the access key inside the vehicle, or switch the push-button ignition switch to "OFF". *If the push-button ignition switch is not switched to "OFF", the doors cannot be locked.

– CONTINUED –

Inside warning chime	Outside warning chime	Access key warning indicator on meter	Operation indicator on push-button ignition switch	Status	Action
Ding, ding ... (7 seconds)	—	(Flashes 1 sec. intermittent)	—	**Access key warning:** The vehicle is driven while the access key is not inside the vehicle.	Carry the access key, and drive the vehicle.
Ding	—	(Flashes 1 sec. intermittent)	—	**Access key warning for engine start:** The push-button ignition switch is pressed while the access key is not inside the vehicle.	Carry the access key, and press the push-button ignition switch.
Ding	Beep, beep, beep (3 times)	(Flashes 1 sec. intermittent)	—	**Access key takeout warning:** The driver exits the vehicle with the access key and closes the driver's door while the push-button ignition switch is in a position other than "OFF" and the select lever is in the "P" position.	Switch the push-button ignition switch to "OFF", and get out of the vehicle.
Ding	Beep, beep, beep (3 times)	(Flashes 1 sec. intermittent)	—	**Passenger access key takeout warning:** A fellow passenger exits the vehicle with the access key and closes a door other than the driver's door while the push-button ignition switch is in a position other than "OFF".	Return the access key to inside the vehicle, or switch the push-button ignition switch to "OFF".
Long beep (continuous)	Long beep (continuous)	(Flashes 1 sec. intermittent)	—	The driver exits the vehicle with the access key and closes the driver's door while the push-button ignition switch is in a position other than "OFF" and the select lever is in a position other than the "P" position.	Shift the select lever to the "P" position, switch the push-button ignition switch to "OFF" and exit the vehicle.

Inside warning chime	Outside warning chime	Access key warning indicator on meter	Operation indicator on push-button ignition switch	Status	Action
Long beep (continuous)	—	—	—	**Select lever position warning:** ● Case 1: The engine is turned off by pressing the push-button ignition switch while the select lever is in a position other than the “P” position. ● Case 2: The driver’s door is opened while the push-button ignition switch is in a position other than “OFF” and the select lever is in a position other than the “P” position.	● Case 1: Start the engine, shift the select lever to the “P” position, switch the push-button ignition switch to “OFF” and exit the vehicle. ● Case 2: Shift the select lever to the “P” position, switch the push-button ignition switch to “OFF” and exit the vehicle.
Ding	—	—	—	The battery of the access key is low.	Replace the battery of the access key.
Ding	—	—	Flashes in green (15 seconds max.)	**Steering lock warning:** The engine start procedure is performed, but the steering is still locked.	While turning the steering wheel right and left lightly, depress the brake pedal and press the push-button ignition switch.
Ding	—	—	Flashes in orange	**System malfunction warning:** A malfunction is detected in the power system or steering lock.	Contact a SUBARU dealer immediately and have the vehicle inspected.

– CONTINUED –

■ Security indicator light

This indicator light shows the status of the alarm system. It also indicates operation of the immobilizer system.

▼ Alarm system

It blinks to show the driver the operational status of the alarm system. For detailed information, refer to “Alarm system” ☞2-26.

▼ Immobilizer system

The security indicator light starts blinking in the following conditions.

For models with “keyless access with push-button start system”:

- Immediately after the push-button ignition switch is turned to the “OFF” position.
- Immediately after the driver’s door is opened or closed when all of the following conditions are met.
  - The push-button ignition switch is in the “ON” or “ACC” position.
  - The access key is outside the vehicle.
  - The engine is not running.

In the event that the push-button ignition switch is pressed to turn it on or to start the engine carrying an unauthorized key (for example, the key is unregistered or the ID code does not match), the power is not switched to “ON” and the security indicator light continues blinking.

For models without “keyless access with push-button start system”:

- Approximately 60 seconds after the ignition switch is turned from the “ON” position to the “ACC” or “LOCK” position.
- Immediately after the key is pulled out.

If the indicator light does not blink in the above conditions, it may indicate that immobilizer system may be malfunctioning. Contact your nearest SUBARU dealer immediately.

In the event that an unauthorized key (for example, an unauthorized duplicate) is used to start the engine, the security indicator light illuminates. For details about the immobilizer system, refer to “Immobilizer” ☞2-3.

NOTE

- **The security indicator light remains off in the following conditions. This is normal and does not indicate a malfunction.**
  - **while the engine is running**
  - **for approximately 60 seconds after the ignition switch is turned from the “ON” position to the “ACC” or “LOCK”/“OFF” position**
- **Even if the security indicator light blinks irregularly or its fuse blows (the light does not blink if its fuse is blown), the immobilizer system will function normally.**

■ Select lever/gear position indicator (CVT models)

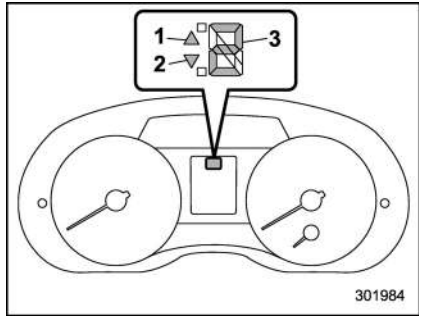

Type A

1) Upshift indicator
2) Downshift indicator
3) Select lever/gear position indicator

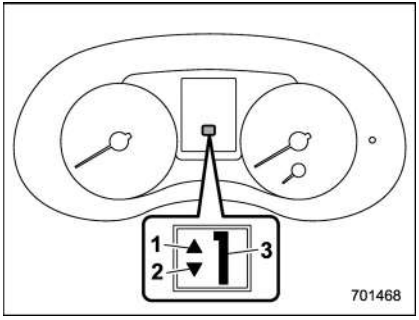

Type B
1) Upshift indicator
2) Downshift indicator
3) Select lever/gear position indicator

This indicator shows the position of the select lever.

When the manual mode is selected, the gear position indicator (which shows the current gear selection) and the upshift/downshift indicator light up. Refer to "Continuously variable transmission" ☞7-23.

■ Turn signal indicator lights

These lights show the operation of the turn signal or lane change signal.

If the indicator lights do not blink or blink rapidly, the turn signal bulb may be burned out. Replace the bulb as soon as possible. Refer to "Replacing bulbs" ☞11-36.

■ High beam indicator light

This light shows that the headlights are in the high beam mode.

This indicator light also illuminates when the headlight flasher is operated.

■ Cruise control indicator light (if equipped)

This light illuminates when the cruise control main button is pressed to activate the cruise control function. For details, refer to "To set cruise control" ☞7-44.

⚠ CAUTION

If the CHECK ENGINE warning light/malfunction indicator light illuminates, the cruise control indicator light flashes at the same time. At this time, avoid driving at high speed and have your vehicle inspected at a SUBARU dealer as soon as possible.

■ Cruise control set indicator light (if equipped)

This light illuminates when vehicle speed has been set to use the cruise control function. Refer to "To set cruise control" ☞7-44.

■ Automatic headlight beam leveler warning light (models with HID headlights)

This light illuminates when the automatic headlight beam leveler does not operate normally.

If this light illuminates while driving or does not turn off approximately 3 seconds after turning the ignition switch to the "ON" position, have your vehicle inspected at your SUBARU dealer.

■ Front fog light indicator light

This indicator light illuminates while the front fog lights are illuminated.

– CONTINUED –

■ Headlight indicator light

This indicator light illuminates under the following conditions.

- when the light switch is turned to the "≡DOE" or "≡D" position
- when the light control switch is in the "AUTO" position and the headlights illuminate automatically

■ Steering responsive fog lights warning indicator/Steering responsive fog lights OFF indicator (models with EyeSight system)

NOTE

For details about the steering responsive fog lights system, refer to "Steering responsive fog lights system (models with EyeSight system)" ☞3-94.

▼ Steering responsive fog lights warning indicator

This indicator appears when the steering responsive fog lights system malfunctions. When this indicator appears while the system is activated, contact your SUBARU dealer for an inspection.

▼ Steering responsive fog lights OFF indicator

This indicator appears when the steering responsive fog lights system is deactivated. This indicator disappears when the system is activated.

■ BSD/RCTA warning indicator (if equipped)

This warning indicator appears when the BSD/RCTA is malfunctioning. In this case the BSD/RCTA warning indicator will be shown on the multi information display of the combination meter. When this indicator appears, have your vehicle inspected by your SUBARU dealer as soon as possible.

■ BSD/RCTA OFF indicator (if equipped)

The indicator appears when the BSD/RCTA OFF switch is pressed to deactivate the BSD/RCTA. In this case the BSD/RCTA OFF indicator will be shown on the multi information display of the combination meter. For details, refer to "BSD/RCTA" ☞7-48.

Information display (if equipped)

NOTE

For models with color multi function display, refer to "Multi function display" ☞3-42.

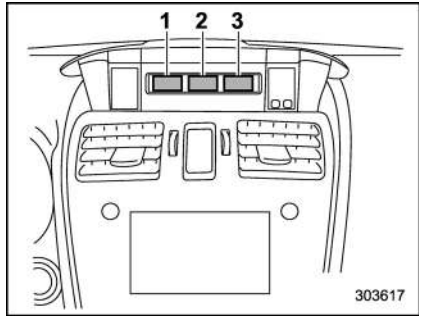

1) Outside temperature indicator
2) Driving information display
3) Clock

With the ignition switch in the "ACC" position, the clock appears on the display.

With the ignition switch in the "ON" position, the outside temperature indicator, driving information display and clock all appear on the display.

■ Outside temperature indicator

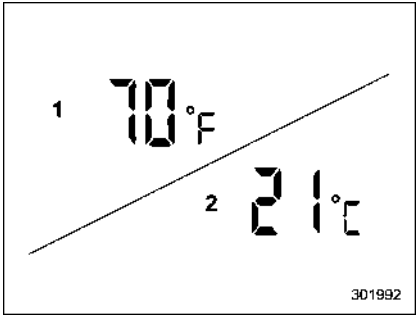

1) U.S.-spec. models
2) Except U.S.-spec. models

The outside temperature indicator shows the outside temperature in a range from −40 to 122°F (−40 to 50°C).

The indicator can give a false reading under any of the following conditions.

- When there is too much sun.
- During idling; while running at low speeds in a traffic jam; when the engine is restarted immediately following a shutdown.
- When the actual outside temperature falls outside the specified indicator range.

▼ Road surface freeze warning indication

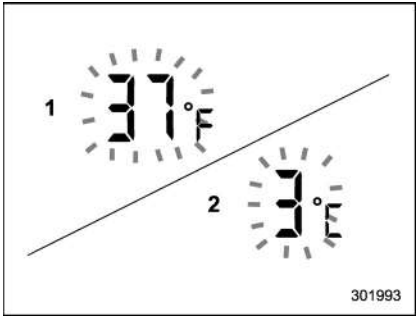

1) U.S.-spec. models
2) Except U.S.-spec. models

When the outside temperature drops to 37°F (3°C) or lower, the temperature indication flashes to show that the road surface may be frozen.

If the outside temperature drops to 37°F (3°C) or lower while the display is giving an indication other than the outside temperature, the display switches to the outside temperature indication and flashes for 5 seconds before returning to its original indication.

If the display is already indicating an outside temperature of 37°F (3°C) or lower when the ignition switch is turned to the "ON" position, the indication does not flash.

NOTE

The outside temperature indication may differ from the actual outside temperature. The road surface freeze warning indication should be treated only as a guide. Be sure to check the condition of the road surface before driving.

■ Driving information display

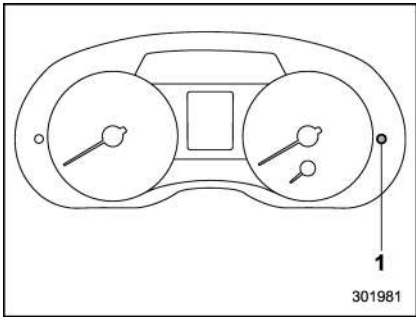

1) Information display selection knob

With the ignition switch in the "ON" position, each successive press of the information display selection knob switches the display in the following

– CONTINUED –

sequence.

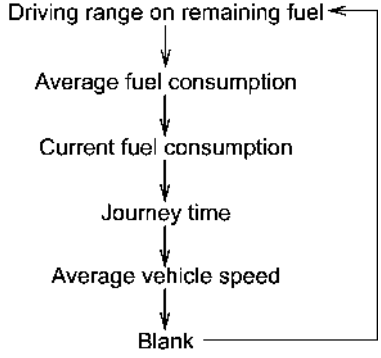

▼ **Driving range on remaining fuel**

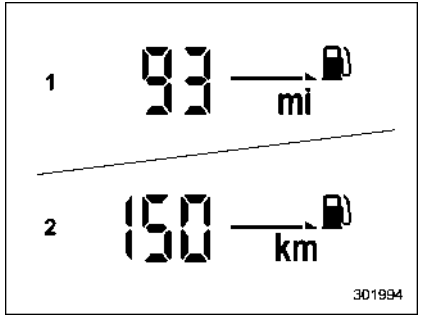

1) U.S.-spec. models
2) Except U.S.-spec. models

The driving range indicates the distance that can be driven taking into account the amount of fuel remaining in the tank and the average rate of fuel consumption.

When the low fuel warning light illuminates, the driving range display flashes for 5 seconds. (The display first switches to the driving range value if a different value was previously displayed.)

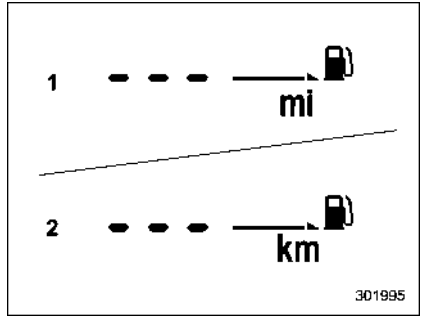

1) U.S.-spec. models
2) Except U.S.-spec. models

If the driving range is shown as "- - -", there is only a tiny amount of fuel left in the tank. You must refuel the vehicle immediately.

NOTE

The driving range on remaining fuel is only a guide. The indicated value may differ from the actual driving range on remaining fuel, so you must immediately fill the tank when the low fuel warning light illuminates.

▼ **Average fuel consumption**

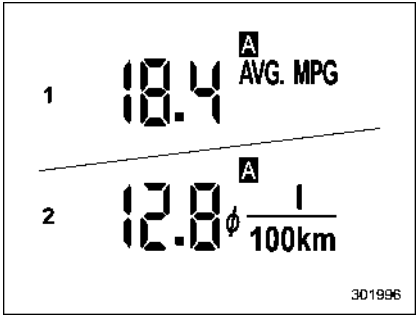

1) U.S.-spec. models
2) Except U.S.-spec. models

This display shows the average rate of fuel consumption since the trip meter was last reset.

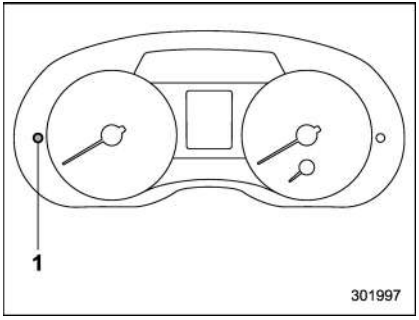

1) Trip knob

Pressing the trip knob toggles the display between the average fuel consumption corresponding to the A trip meter display and the average fuel consumption corresponding to the B trip meter display.

When either of the trip meter displays is reset, the corresponding average fuel consumption value is also reset.

NOTE

- **The indicated values vary in accordance with changes in the vehicle's running conditions. Also, the indicated values may differ slightly from the actual values and should thus be treated only as a guide.**
- **When either trip meter display is reset, the average fuel consumption corresponding to that trip meter display is not shown until the vehicle has subsequently covered a distance of 1 mile (or 1 km).**

▼ **Current fuel consumption**

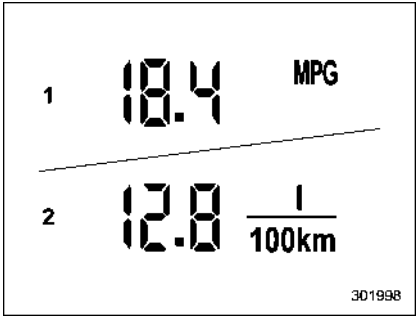

1) U.S.-spec. models
2) Except U.S.-spec. models

This indication shows the rate of fuel consumption at the present moment.

– CONTINUED –

▼ **Journey time**

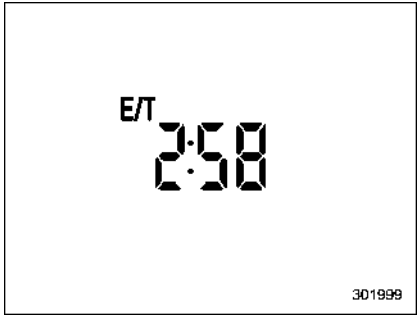

The journey time shows the time that has elapsed since the ignition switch was turned to the “ON” position.

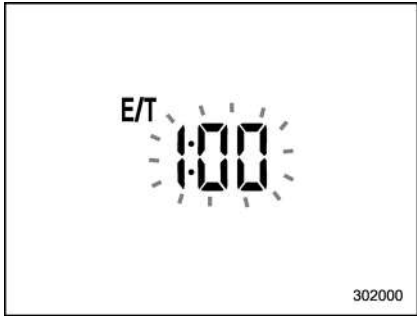

The journey time indication flashes each time a complete hour has elapsed. If the display is giving a reading other than the journey time, the display switches to the journey time, flashes for 5 seconds, and returns to its original reading each time a complete hour has elapsed.

NOTE

The journey time is reset when the ignition switch is turned to the “LOCK”/ “OFF” position. It is also reset if the ignition switch is turned to the “LOCK”/ “OFF” or “ACC” position prior to restarting of the engine.

▼ **Average vehicle speed**

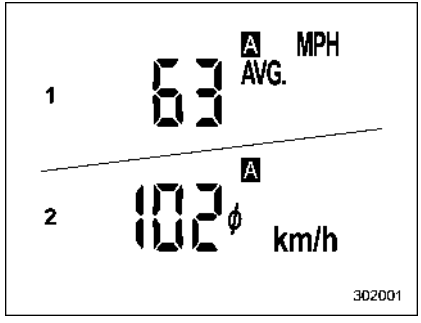

1) U.S.-spec. models
2) Except U.S.-spec. models

This display shows the average vehicle speed since the trip meter was last reset.

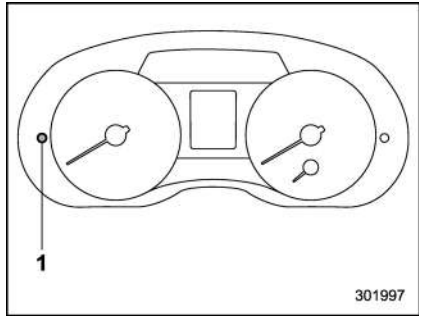

1) Trip knob

Pressing the trip knob toggles the display between the average vehicle speed corresponding to the A trip meter display and the average vehicle speed corresponding to the B trip meter display.

When either of the trip meter displays is reset, the corresponding average vehicle speed value is also reset.

NOTE

When either trip meter display is reset, the average vehicle speed corresponding to that trip meter display is not shown until the vehicle has subsequently covered a distance of 1 mile (or 1 km).

▼ **Turn off display of driving information display**

The driving information display can be turned off.
To turn off the display, turn the ignition switch to the “LOCK”/“OFF” position and press the “+” button adjacent to the clock display for approximately 5 seconds. Then, the driving information display and the clock display will blink for 3 seconds to notify you that the driving information display has been turned off.
To restore the driving information display, once again press the “+” button for approximately 5 seconds.

NOTE

- **The initial display setting of the driving information display has been set to operational at the time of shipment from the factory.**
- **The average fuel consumption and average vehicle speed are calculated even while the driving information display is not displayed.**
- **Even if you turn off the driving information display, the display will automatically turn on when the battery voltage is disconnected and then reconnected for battery replacement or fuse replacement.**

■ Clock

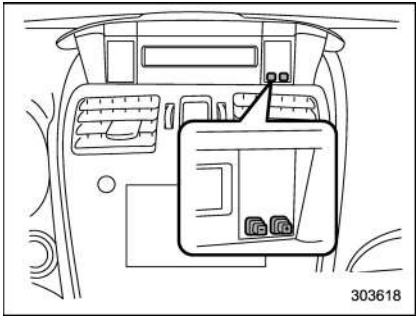

To adjust the time shown by the clock, press the “+” button or “−” button. If you press the “+” button, the indicated time will change in one-minute increments. If you press the “−” button, the indicated time will change in one-minute decrements. If you keep the button pressed, the rate at which the indicated time changes will speed up.

The clock can be set to 12-hour or 24-hour clock displays. Perform the following procedure to switch the display format.

1. Place the ignition switch in the “LOCK”/“OFF” position.
2. Press and hold the “−” button that is located near the clock display for approximately 5 seconds. The clock display will then start to flash.
3. While the clock display is flashing, press and hold the “+” button for approximately 2 seconds. The clock format will then change.
4. The clock display will continue to flash for approximately 3 seconds to inform you that the clock display has been changed. If you want to change the clock display again, press and hold the “+” button for approximately 2 seconds while the clock display is flashing.

Multi information display (models with type B combination meter)

WARNING

Always pay adequate attention to safe driving when operating the multi information display while the vehicle is in motion. When operation of the multi information display interferes with your ability to concentrate on driving, stop the vehicle before performing operations on the screen. Also, do not concentrate on the display while driving. Doing so may cause you to look away from the road and could result in an accident.

Various information will be shown on the multi information display. Also, a warning message will appear on the display if a malfunction, etc. is detected. In addition, several settings for the displayed content can be performed.

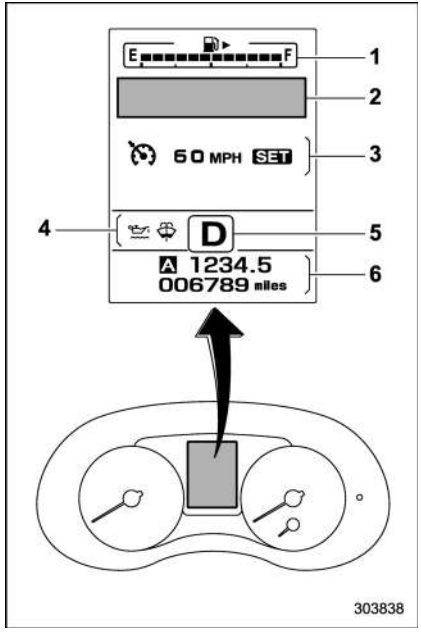

Multi information display

1) Fuel gauge (refer to “Fuel gauge” ☞3-12.)
2) Warning screen (refer to “Warning screen” ☞3-39.)/Basic screen (refer to “Basic screens” ☞3-39.)
3) Cruise control information display
4) Warning indicator
5) Select lever/gear position indicator (refer to “Select lever/gear position indicator (CVT models)” ☞3-30.)
6) Odometer (refer to “Odometer” ☞3-10.)/ double trip meter (refer to “Double trip meter” ☞3-10.)

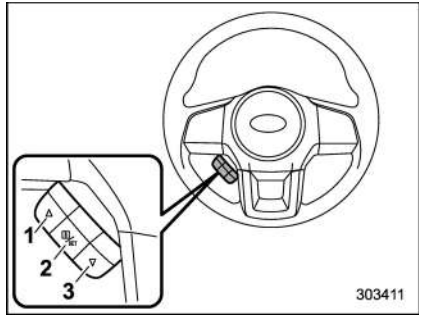

Control switch

1) Up (select)
2) Set (enter)
3) Down (select)

■ Basic operation

By operating "▲" or "▼" of the control switch, the screens and selection items can be switched. When the "i/SET" switch is pulled toward you, the item can be selected and set.

If there are some useful messages, such as vehicle information, warning information, etc., they will interrupt the current screen, and appear on the display accompanied by a beep. If such a screen is displayed, take proper action according to the message shown on the screen.

The warning screen will return to the original screen after a few seconds. While the "i" information reminder is shown on the display, it may be possible to display the warning screen again. To recall the message marked with "i" on the display, pull the "i/SET" switch on the steering wheel toward you.

■ Welcome screen and Good-bye screen

When the driver's door is opened and closed after unlocking the door, the welcome screen will appear on the multi information display for approximately 20 seconds.

When the ignition switch is turned to the "LOCK"/"OFF" position, the multi information display gradually turns off (Good-bye screen).

NOTE

- **The basic screen will be shown when the ignition switch is turned to the "ON" position while the welcome screen is displayed.**
- **Once the welcome screen appears, it takes a certain period of time to display it again.**
- **If the ignition switch is operated after unlocking the driver's door, the welcome screen will not appear even when the driver's door is opened and closed.**
- **The welcome screen will disappear when you lock the driver's door by using the remote keyless entry system (all models) or the keyless access function (if equipped) while the welcome screen is displayed.**
- **If any of the doors (including the rear gate) is opened while the welcome screen is displayed, the door ajar warning will appear.**
- **The welcome screen can be set to on or off. For details, refer to "Welcome Good-bye Screen" ☞3-41.**

■ Warning screen

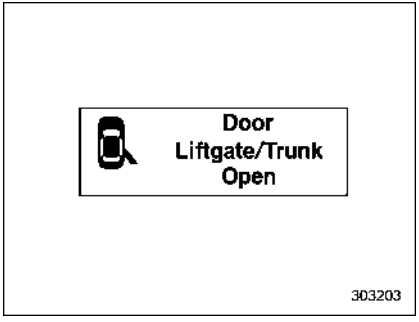

Example of warning

If there is a warning message or a maintenance notification, it will appear for approximately 3 seconds. Take the appropriate actions based on the messages indicated.

■ Basic screens

By operating the "▲" or "▼" switch on the steering wheel, you can change the screen that is always displayed.

– CONTINUED –

Default screen:

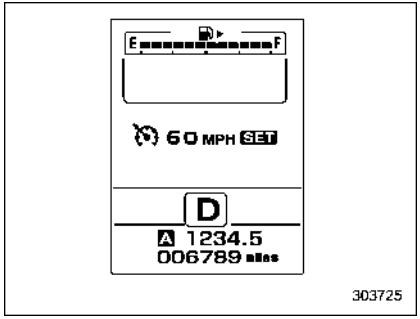

Digital speedometer:

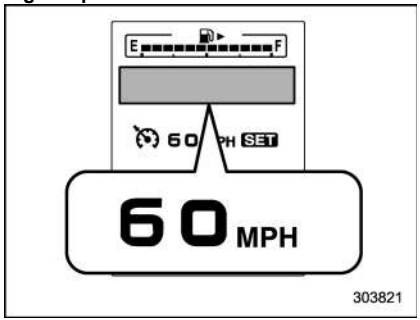

Menu screen entering screen:

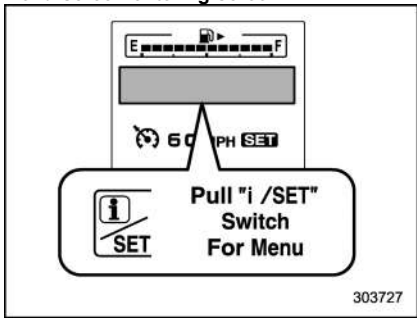

While this screen is selected, pull the "i/SET" switch to enter the menu screen.

■ Menu screens

Pull the "i/SET" switch to enter the menu screens when all of the following conditions are satisfied.

- The vehicle has been completely stopped.
- The select lever is in the "P" position.
- The menu screen entering screen is selected.
- The "i" information reminder is off.

The menu list is as follows.

First menu	Second menu
Screen Settings	Welcome Good-bye Screen
	Gauge Initial Movement
	Languages
	Go Back
EyeSight (models with EyeSight system)	Warning Volume
	Lead Vehicle Acquisition Sound
	Lead Vehicle Moving Monitor Function
	Go Back
BSD/RCTA (if equipped)	Warning Volume
Default Settings	—

By operating the "▲" or "▼" switch on the steering wheel, you can select the menu. Pull the "i/SET" switch to enter the selected menu.

NOTE

If you enter the "Go Back" menu, the system will return to the previous screen.

▼ Screen Settings

After entering the "Screen Settings" menu, select one of the following menus.

▽ Welcome Good-bye Screen

The welcome screen/good-bye screens can be activated or deactivated. Select "On" to activate the screens. Select "Off" to deactivate the screens.

▽ Gauge Initial Movement

The movement of the meter needles and gauge needles that occurs when the ignition switch is turned to the "ON" position can be activated or deactivated. Select "On" to activate. Select "Off" to deactivate.

– CONTINUED –

▽ **Languages**

Operate the "▲" or "▼" switch on the steering wheel to display the preferred language. Then pull the "i/SET" switch to select the displayed language.

▼ **EyeSight (models with EyeSight system)**

NOTE

For models with the EyeSight system, refer to the Owner's Manual supplement for the EyeSight system.

▼ **BSD/RCTA (if equipped)**

After entering the "BSD/RCTA" menu, select the "Warning Volume" menu. You can set the volume of the warning buzzer for RCTA (Rear Cross Traffic Alert). You can select "Max", "Mid", "Min" or "Off".

▼ **Default Settings**

Select "Yes" to use the menu screen to restore customized settings to the factory default settings. Select "No" to return to the previous screen without restoring the factory default settings.

Multi function display (if equipped)

■ Models without multi function display

NOTE

For models with information display (black and white), refer to "Information display" ☞3-32.

The U.S.-spec models are not equipped with the multi function display. The other models may be equipped with the multi function display or not, depending on the model.

■ Safety precautions

⚠ WARNING

Always pay adequate attention to safe driving when operating the multi function display while the vehicle is in motion. When operation of the multi function display is disturbing your awareness and ability to concentrate on driving, stop the vehicle in a safe place before performing operations on the screen. Also, do not concentrate on the display while driving. Doing so may cause you to look away from the road and could result in an accident.

■ Features

The multi function display has the following functions.

Description	Page
Displays useful messages, such as warning information, etc.	3-46
Displays basic screens (e.g. fuel consumption screen, etc.)	3-46
Sets and adjusts maintenance notification	3-73
Registers driving history	3-76
Sets and customizes car operation	3-77

Also, the multi function display can also be used to set and initialize the multi function display itself.

NOTE

When the vehicle is in motion, certain functions and selections may not be available.

■ Locations

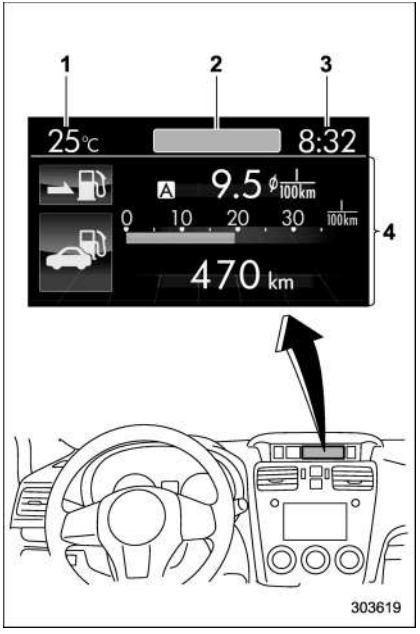

Multi function display

1) Outside temperature indicator
2) Top display (For the display setting, refer to "Top display setting" ☞3-65.)
3) Clock
4) Driving information display (For the displayed contents, refer to "Basic screens" ☞3-46.)

■ Basic operation

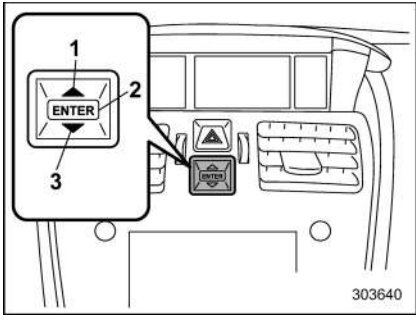

Control switch

1) Up (select)
2) ENTER (push)
3) Down (select)

By operating "▲" or "▼" of the control switch, the screens and selection items can be switched. When the ENTER button is pushed, the item can be selected and set.

– CONTINUED –

■ Welcome screen

When the door is unlocked and the driver's door is opened, the welcome screen will appear for a short time.

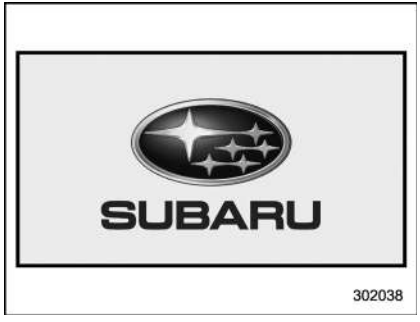

NOTE

- **The welcome screen will disappear when the ignition switch is turned to the "ON" position while the welcome screen is displayed.**
- **If any of the doors (including the rear gate) is opened while the welcome screen is displayed, the door ajar warning will appear.**
- **The welcome screen can be set to on or off. For details, refer to "Bypass screen setting" ☞3-71.**
- **For a certain period of time after the welcome screen has once appeared, it may not appear again even when the driver's door is opened again. This does not indicate a malfunction.**

■ Date screen

If you have set the date and time in the selection screen, after the welcome screen is displayed, the current date will be displayed for a certain period of time. If "On/Off setting" is set to "On" in the "Maintenance settings", the date screen will be displayed after the self-check screen.

▼ **Birthday/anniversary screen**

Example of notification on an anniversary

If you have set a birthday or anniversary, after the date screen is displayed, the notification (reminder) will be displayed for a certain period of time from 7 days prior to the set date.

NOTE

- **Displaying the birthday/anniversary screen can be set to on or off. Refer to "Bypass screen setting" ☞3-71.**
- **Up to five items can be set for birthdays and anniversaries respectively. Refer to "Selection screen" ☞3-53.**

■ Ending screen

If "Eco Summary" is set to "On" in the "Bypass screen setting", the "Fuel consumption results screen" will be displayed before the screen turns off when the ignition switch is turned to the "LOCK"/"OFF" position.

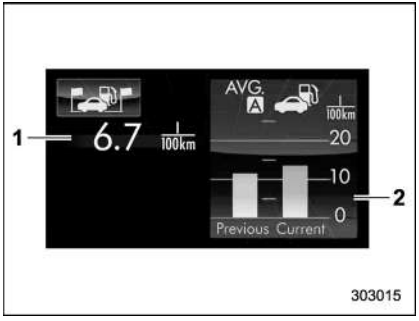

Fuel consumption results screen

1) The average fuel consumption for the entire driving distance, from when the ignition switch was turned to the "ON" position to when it was turned to the "LOCK"/"OFF" position.
2) This display shows the average rate of fuel consumption since the trip meter was last reset. It displays the average fuel consumption corresponding to the A trip meter mileage or the one corresponding to the B trip meter mileage.

■ Self-check screen

When the ignition switch is turned to the "ON" position, the vehicle self-check will be performed. The screens corresponding to the following items will appear one after another for several seconds each.

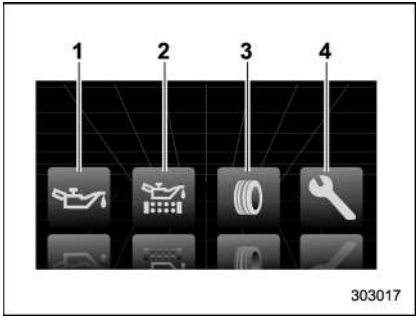

1) Engine oil: Checks the interval of engine oil replacement.
2) Oil filter: Checks the interval of oil filter replacement.
3) Tires: Checks the interval of tire rotation.
4) Inspection and maintenance: Checks the interval of inspection and maintenance.

When the checks are performed, the color of the icon corresponding to the checked item will turn green.

If there is no warning message, the self-check will be complete without notification.

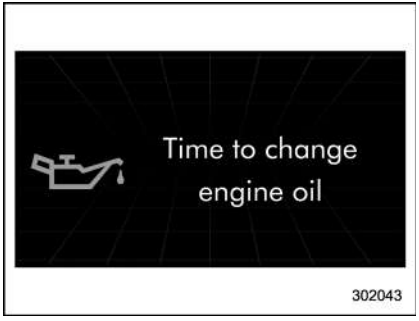

Example of notification

If there is a warning message or a maintenance notification, the color of the icon corresponding to the item will turn yellow and the warning message or the maintenance notification will be displayed. Take the appropriate actions based on the messages indicated.

NOTE

- **The self-check screen can be set to on or off. For details, refer to "On/Off setting" ☞3-74.**
- **After performing the maintenance, change the setting of the corresponding maintenance item. For details, refer to "Maintenance settings" ☞3-73.**
- **The maintenance notification screen will be displayed under either of the**

– CONTINUED –

following conditions.

– The period of time remaining until the registered notification date is 15 days or less.

– The total driving distance remaining until the registered notification distance is approximately 311 miles (500 km) or less.

- **The maintenance notification screen will be displayed until either of the following conditions is satisfied.**

– The period of time passed after the registered notification date is 15 days or more.

– The total distance driven after the registered notification distance is approximately 311 miles (500 km) or more.

■ Interruption screen

Warning information (display example)

Useful messages, such as reminder information, vehicle information, warning information, etc. may interrupt the current screen and appear on the display accompanied by a beep. Take proper action according to the message.

The warning screen will return to the original screen after a few seconds.

■ Basic screens

▼ Basic screen items

These are the basic screens of the multi function display.

Item	Page
Information bar	3-47
Fuel consumption screen	3-48
ECO gauge screen (if equipped)	3-48
ECO history screen	3-49
Vehicle activation status screen	3-49
EyeSight screen (models with the EyeSight system)	3-51
Triple meter screen	3-51
Guidance screen	3-52
Clock/calendar screen	3-52

By operating "▲" or "▼" of the control switch, you can switch the screen that is always displayed. Also, when the ENTER button is pressed and held, the selection screen can be displayed. For details about the selection screen, refer to "Selection screen" ☞3-53.

▼ Information bar

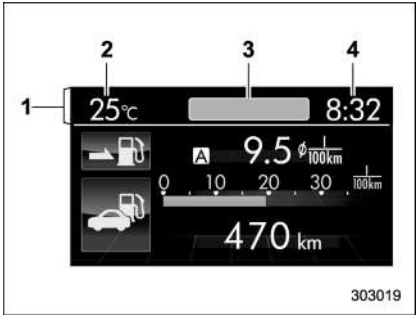

1) Information bar
2) Outside temperature indicator
3) Top display
4) Clock

While the ignition switch is in the “ACC” or “ON” position, the outside temperature indicator, clock, etc. will be shown on the information bar.

▽ Outside temperature indicator

This displays the outside temperature between −40°F (−40°C) and 122°F (50°C).

Icy road surface warning screen

When the outside temperature becomes 37°F (3°C) or less, the icy road surface warning screen interrupts to inform the driver that the road surface may be frozen.

NOTE

- **The outside temperature indicator shows the temperature around the sensor. Therefore, the temperature indication may differ from the actual outside air temperature.**
- **The icy road surface warning screen should be treated only as a guide. Be sure to check the condition of the road surface before driving.**
- **Once the icy road surface warning screen is displayed, it will not be displayed again unless the outside temperature has increased to 41°F (5°C) or higher.**

▽ Top display

One of the following items can be displayed on the top display.

- Average fuel consumption corresponding to the driving distance of each trip meter
- Current fuel consumption (This may not be displayed when driving at a low speed.)
- Driving range on remaining fuel

For details about the setting of the top display, refer to “Top display setting” ☞3-65.

NOTE

The driving range on the remaining fuel is calculated using the average fuel consumption of the last 19 miles (30 km) driven. This value may be different from the values calculated using the average fuel consumption corresponding to the driving distance of each trip meter or the current fuel consumption.

– CONTINUED –

▽ **Clock**

The clock can be displayed in either 12-hour display or 24-hour display. For details about the setting, refer to “Current date and time setting” ☞3-56.

NOTE

If the vehicle battery is disconnected, the clock shown in the information bar will be reset. Set the time again after the vehicle battery is connected. For details about the setting, refer to “Top display setting” ☞3-65.

▼ **Fuel consumption screen**

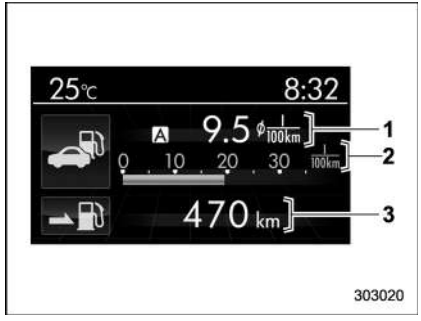

1) Average fuel consumption corresponding to the driving distance of each trip meter
2) Current fuel consumption
3) Driving range on remaining fuel

The displayed location can be customized. For details, refer to “Fuel consumption screen setting” ☞3-66.

▼ **ECO gauge screen (if equipped)**

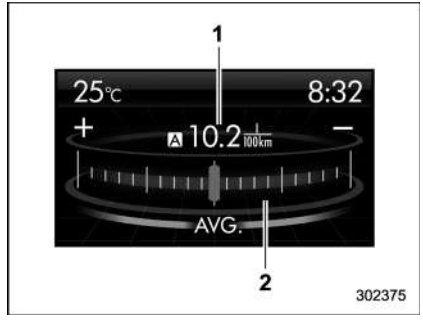

1) Average fuel consumption corresponding to the driving distance of each trip meter
2) ECO gauge

The gauge pointer shows the difference between the current fuel consumption and the average fuel consumption that is displayed on the center part of the screen. If the gauge pointer moves toward the green side, this indicates better fuel efficiency.

▼ ECO history screen

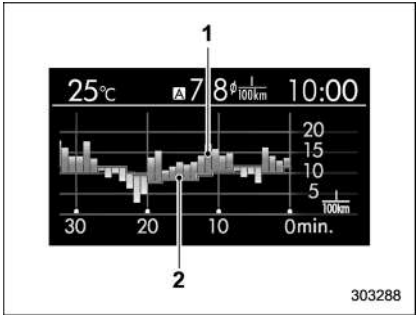

1) Average fuel consumption per unit time (bar graph)
2) Average fuel consumption corresponding to the driving distance of each trip meter (red line)

This screen displays the fuel economy history for the vehicle using a bar graph.

The horizontal scale represents the past time range and the vertical scale represents the fuel consumption. The green bars show driving with good fuel economy and the yellow bars show driving with poor fuel economy.

The time range of the history can be set. The width of the bar graph is adjusted as follows depending on the set time range.

Time range	Width of bar graph
30 minutes	1 minute
60 minutes	2 minutes
120 minutes	4 minutes

For details about the setting, refer to “Economy history setting” ☞3-67.

▼ Vehicle activation status screen

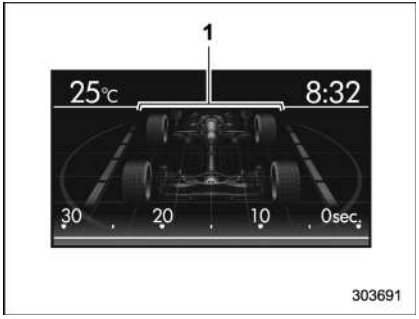

When the vehicle stops
1) Steering axle

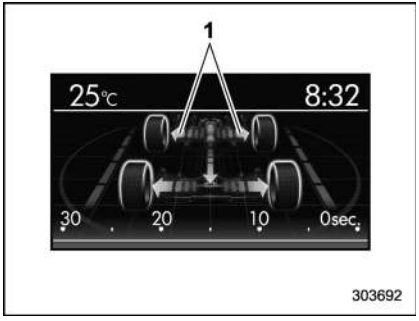

When the vehicle is being driven regularly
1) Power train (illuminated in blue)

– CONTINUED –

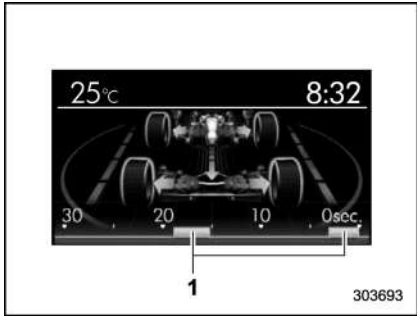

When the Vehicle Dynamics Control system is being activated: the tires illuminate in yellow.

1) History of Vehicle Dynamics Control system activation

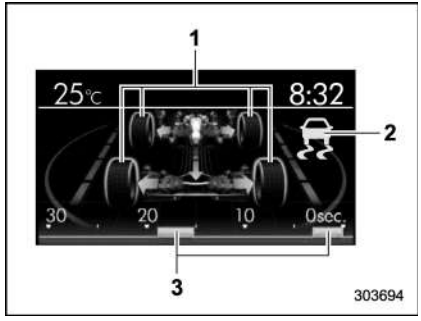

When the Vehicle Dynamics Control system has been activated: the tires remain illuminated in yellow while the Vehicle Dynamics Control System is activated.

1) Activation status of the ABS (Anti-lock Brake System)
2) Vehicle Dynamics Control system operating indicator (flashing in yellow)
3) History of Vehicle Dynamics Control system activation

This screen displays the following vehicle information.

- steering angle and driving wheel status
- activation status of the ABS (Anti-lock Brake System)
- activation status of the Vehicle Dynamics Control system

While driving, the vehicle wheels are illuminated in blue and the driving direction is represented using an animation of the traffic lane.

If the ABS is activated, all of the vehicle's wheels will be illuminated in yellow and the length of operation in seconds and the number of activations will be displayed in the bar indicator, located on the lowermost part of the display.

If the Vehicle Dynamics Control system is activated, the activated vehicle wheels will be illuminated in yellow and the operating indicator "" will appear on the upper right part of the display. Also, the length of operation in seconds and the number of activations will be displayed in the bar indicator.

▼ EyeSight screen (models with EyeSight system)

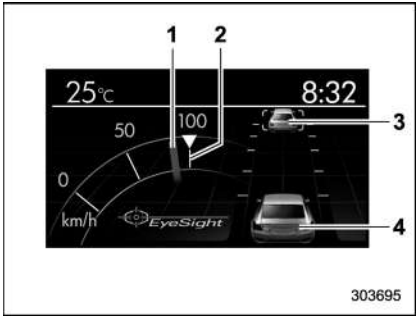

1) Current vehicle speed
2) Set vehicle speed
3) Preceding vehicle
4) Your vehicle

This screen displays the status of the EyeSight system. For details, refer to the Owner's Manual supplement for the EyeSight system.

▼ Triple meter screen

Triple meter screen (display example)

This screen displays up to three optional pieces of information that can be selected from the following items.

The items shown in the triple meter screen can be changed. For details, refer to "Triple meter setting" ☞3-69.

Item	Details
	Average vehicle speed (Average vehicle speed for the entire driving time from when the trip meter was reset)
	Lifetime fuel consumption
	Engine oil temperature
	Accelerator opening ratio
	Journey time (the time that has elapsed since the ignition switch was turned to the "ON" position) (if equipped)
	Journey distance (the distance that has been driven since the ignition switch was turned to the "ON" position)
	Average fuel consumption for the entire driving distance from when the ignition switch was turned to the "ON" position
	Boost pressure

– CONTINUED –

▼ Guidance screen

When the ENTER button is pressed and held, the selection screen can be displayed.

The displayed contents can be set or customized from the selection screen. For details, refer to “Selection screen” ☞3-53.

▼ Clock/calendar screen

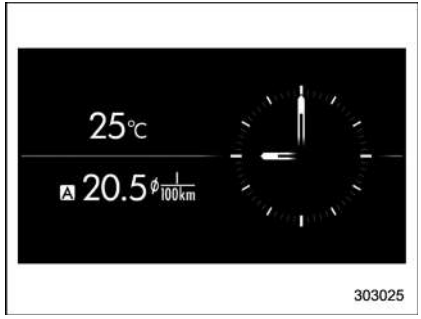

Clock (analog format)

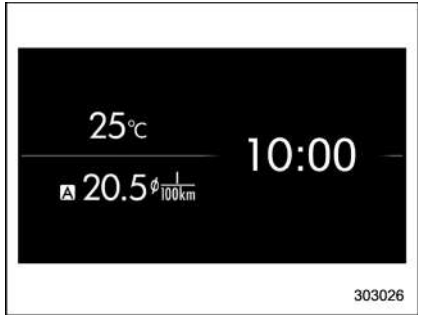

Clock (digital format)

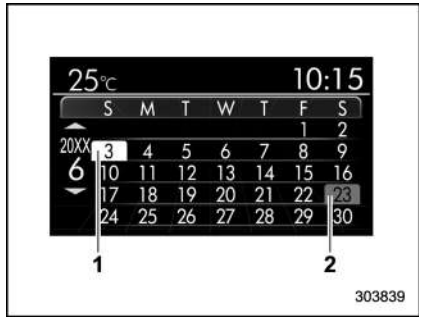

Calendar

1) Today’s date
2) Birthday/Anniversary

In addition to the clock/calendar, the outside temperature and average fuel consumption can also be displayed.

You can select clock (analog format), clock (digital format) or calendar. The clock/calendar can also be set so that it is not displayed. For details, refer to “Clock/calendar screen setting” ☞3-70.

■ Selection screen

When the ENTER button is pushed and held, the setting screen for each menu can be displayed. Select the preferred menu by operating the "▲" or "▼" switch.

Top menu	Menu option	Description		Page
Time/Date	Time/Date	Set and adjust the time and date. 12h or 24h format can be selected.		3-56
	Birthday	Set a birthday.		3-57
	Anniversary	Set an anniversary day.		3-59
	Daylight Saving Time	Turn the daylight saving time on or off		3-62
	Go Back	Return to the top menu.		—
Display	Contrast	Adjust the contrast.	+5 ↔ −5	3-63
	Screen Off	Turn the screen on or off.	On or Off	3-63
	Beep	Adjust the beep sound volume.	High, Low or Off	3-64
	Go Back	Return to the top menu.		—
Screen Setting	Top Display	Set and customize the top display information contents.	Avg Cons, Inst Cons, Range or Off	3-65
	Cons	Customize the fuel consumption information display.		3-66
	Eco History	Set and customize the time of logging fuel consumption history.	30 min, 60 min or 120 min	3-67
	Triple Meter	Set and customize the triple meter.		3-69
	Clock	Select the clock format.	Analog, Digital, Calendar or Off	3-70
	Bypass Screen	Set the bypass screen for each item.	On or Off	3-71
	Languages	Select the display language.	English or French	3-72
	Go Back	Return to the top menu.		—

– CONTINUED –

Top menu	Menu option	Description		Page
Maintenance	Engine Oil	Set and adjust the oil maintenance notification date.		3-73
	Oil Filter	Set and adjust the oil filter maintenance notification date.		3-74
	Tires	Set and adjust the tire maintenance notification date.		3-74
	Maintenance Schedule	Set and adjust the vehicle maintenance notification date.		3-74
	On/Off	Turn on or off the self-check screen that is activated when the ignition switch is turned to the “ON” position.	On or Off	3-74
	Clear All Settings	Clear all settings for maintenance items.	Yes or No	3-75
	Go Back	Return to the top menu.		—
Driving History	Set	Register and overwrite the driving record.		3-76
	Go Back	Return to the top menu.		—
Car Setting	Keyless Buzzer Volume	Set the audible signal volume.	0 (OFF) to 7	3-78
	Hazard Warning Flasher	Set the hazard warning flasher.	On or Off	3-78
	Defogger	Set and customize the operation of the defogger.	15 minutes or Continuous	3-79
	Interior Light	Set and customize the interior light off delay timer.	10, 20, 30 seconds or Off	3-81
	Auto Light Sensor (if equipped)	Set and customize the sensitivity of the auto light sensor.	Low, Mid, High or Max	3-82
	Keyless Access Setting (if equipped)	Set and customize the keyless access function.	Driver’s Door Unlock	3-83
			Rear Gate Unlock	3-84
	Go Back	Return to top menu.		—

Top menu	Menu option	Description		Page
Initialize	Reset to Defaults	Reset all settings to the default settings.	Yes or No	3-86
	Lifetime Fuel Consumption Reset	Clear logged lifetime fuel consumption data.	Yes or No	3-87
	Go Back	Return to the top menu.		—
Go Back	—	Return to the top menu.		—

– CONTINUED –

■ Date and time settings

The items in the date and time settings can be set. To change the items, operate the "▲" or "▼" switch.

NOTE

- **The "Time/Date" item must be set to display the "Birthday", "Anniversary" and notifications for vehicle maintenance.**
- **The "Birthday" and "Anniversary" items can be entered after the "Date" item has been set.**
- **Dates that do not exist in the Gregorian calendar cannot be set (for example, April 31).**
- **If your vehicle is equipped with genuine SUBARU navigation system, the clock of navigation system must be set separately.**

▼ Preparation for date setting

1. Turn the ignition switch to the "ON" position.
2. Push and hold the ENTER button to show the selection screen.

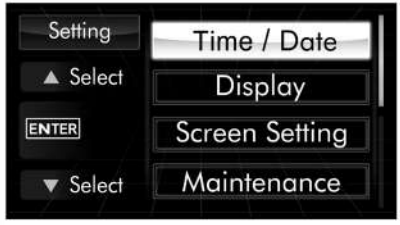

303302

3. After the selection screen is displayed, operate the "▲" or "▼" switch to show the "Time/Date" item. Then, push the ENTER button.

▼ Current date and time setting

1. Perform the preparation steps according to "Preparation for date setting" ☞3-56.

303641

2. Operate the "▲" or "▼" switch to select the "Time/Date" item. Then push the ENTER button.

303642

3. Select the item to set by operating the "▲" or "▼" switch. Then push the ENTER button.

303643

4. Select a number by operating the "▲" or "▼" switch. Then push the ENTER button. When "12 h" is selected, the clock will be set to a 12-hour display. When "24 h" is selected, the clock will be set to a 24-hour display.

303644

5. After entering the date and time, select "Set" by operating the "▼" switch and confirm the setting by pushing the ENTER button.

303645

6. The system will notify you that the setting is complete.

▼ Birthday setting

1. Perform the preparation steps according to "Preparation for date setting" ☞3-56.

303646

2. Operate the "▲" or "▼" switch to select the "Birthday" item. Then push the ENTER button.

303309

3. Select an entry in the list to set by operating the "▲" or "▼" switch. Then push the ENTER button.

– CONTINUED –

4. The selected item will be shown. Push the ENTER button to set the selected item.

5. Select numbers by operating the "▲" or "▼" switch. Then push the ENTER button.

6. After entering the date by repeating step 5, you can enter the name.

7. Select characters by operating the "▲" or "▼" switch. Then push the ENTER button.

– You can select characters of the English alphabet (upper case characters and lower case characters are available), eleven symbols or blank spaces.

– The word being edited will be displayed with an underline.

8. After entering the name by repeating step 7, select "Set" by operating the "▼" switch and confirm the setting by pushing the ENTER button.

303315

9. The system will notify you that the setting is complete.

If a birthday is approaching, the following screen will be displayed accompanied by a beep when the ignition switch has been turned to the “ON” position. This function can be set to on or off. For details, refer to “Bypass screen setting” ☞3-71.

303317

From 1 to 7 days prior to the birthday

302406

On a birthday (displayed in red)

NOTE

If “_ _” is selected for either the “Month” or “Day” item instead of numbers, the birthday notification will be deactivated.

▼ Anniversary setting

1. Perform the preparation steps according to “Preparation for date setting” ☞3-56.

303647

2. Operate the “▲” or “▼” switch to select the “Anniversary” item. Then push the ENTER button.

– CONTINUED –

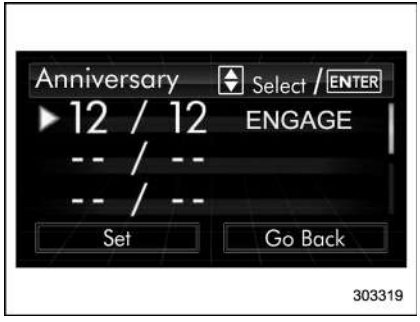

3. Select an entry in the list to set by operating the "▲" or "▼" switch. Then push the ENTER button.

4. The selected item will be shown. Push the ENTER button to set the selected item.

5. Select numbers by operating the "▲" or "▼" switch. Then push the ENTER button.

6. After entering the date by repeating step 5, you can enter the name.

7. Select characters by operating the "▲" or "▼" switch. Then push the ENTER button.

– You can select characters of the English alphabet (upper case characters and lower case characters are available), eleven symbols or blank spaces.

– The word being edited will be displayed with an underline.

303324

8. After entering the name by repeating step 7, select “Set” by operating the “▼” switch and confirm the setting by pushing the ENTER button.

303325

9. The system will notify you that the setting is complete.

If an anniversary is approaching, the following screen will be displayed accompanied by a beep when the ignition switch has been turned to the “ON” position. This function can be set to on or off. For details, refer to “Bypass screen setting” ☞3-71.

303326

From 1 to 7 days prior to the anniversary

302414

On an anniversary (displayed in orange)

NOTE

If “_ _” is selected for either the “Month” or “Day” item instead of numbers, the anniversary notification will be deactivated.

▼ Clearing birthday or anniversary

1. Perform the preparation steps according to “Preparation for date setting” ☞3-56 and display “Birthday” or “Anniversary” on the screen.
2. Select the preferred birthday/anniversary.
3. When “_ _” is selected for either the “Month” or “Day” item instead of numbers, the setting of “Birthday” or “Anniversary” will be cleared.

– CONTINUED –

▼ Daylight saving time setting

1. Perform the preparation steps according to “Preparation for date setting” ☞3-56.

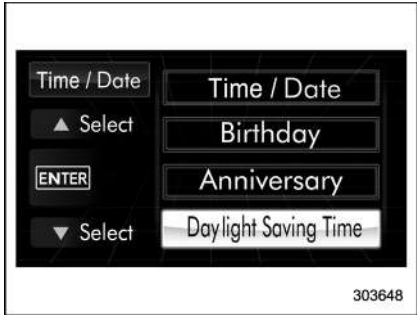

2. Operate the “▲” or “▼” switch to select the “Daylight Saving Time” item. Then push the ENTER button.

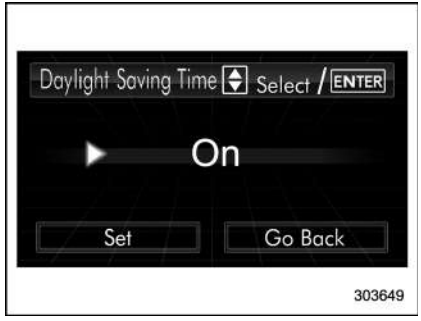

3. The current setting will be displayed. Push the ENTER button to enter the selection mode.

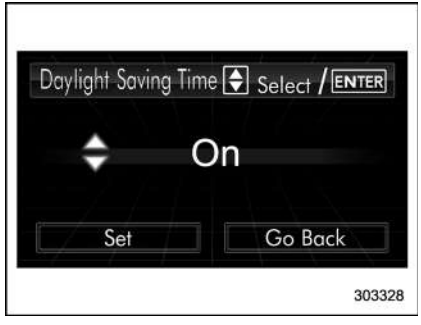

4. Select “On” or “Off” by operating the “▲” or “▼” switch. Then push the ENTER button.

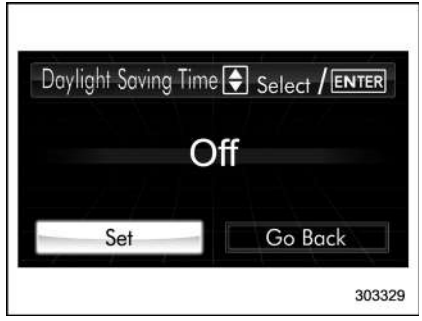

5. Select “Set” by operating the “▼” switch, and confirm the setting by pushing the ENTER button.

6. The system will notify you that the setting is complete.

■ Image quality and volume settings

The image quality and volume settings can be adjusted. To change the items, operate the "▲" or "▼" switch.

▼ Preparation for image quality and volume settings

1. Turn the ignition switch to the "ON" position.
2. Push and hold the ENTER button to show the selection screen.

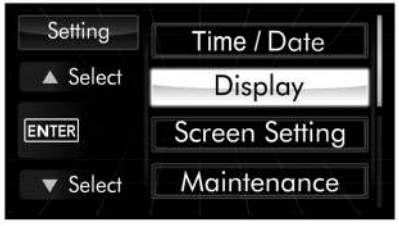

303062

3. After the selection screen is displayed, operate the "▲" or "▼" switch to show the "Display" item. Then, push the ENTER button.

▼ Contrast setting

1. Perform the preparation steps according to "Preparation for image quality and volume settings" ☞3-63.

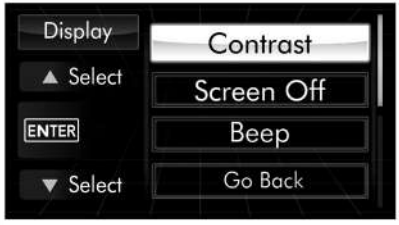

303065

2. Operate the "▲" or "▼" switch to select the "Contrast" item. Then push the ENTER button.

303066

3. Select a contrast level by operating the "▲" or "▼" switch, and confirm the setting by pushing the ENTER button.

▼ Screen OFF setting

1. Perform the preparation steps according to "Preparation for image quality and volume settings" ☞3-63.

– CONTINUED –

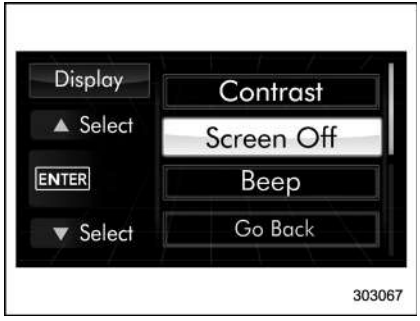

2. Operate the "▲" or "▼" switch to select the "Screen Off" item. Then push the ENTER button.

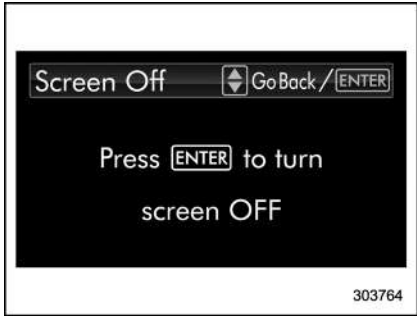

3. Push the ENTER button once more.

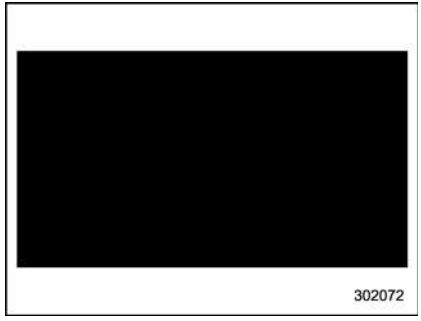

4. The screen is turned off.

Restoring the screen

When the "▲", "▼" or ENTER button is pushed after the ignition switch is turned to the "ON" position, the screen will be restored. The screen will be restored with the basic screen that was displayed when the screen was turned off. While the screen is off, a warning message will be displayed if necessary, but other screens will not be displayed.

▼ Beep volume setting

1. Perform the preparation steps according to "Preparation for image quality and volume settings" ☞3-63.

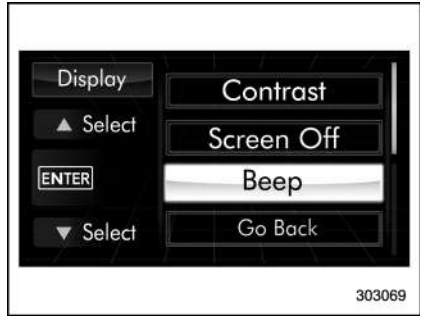

2. Operate the "▲" or "▼" switch to select the "Beep" item. Then push the ENTER button.

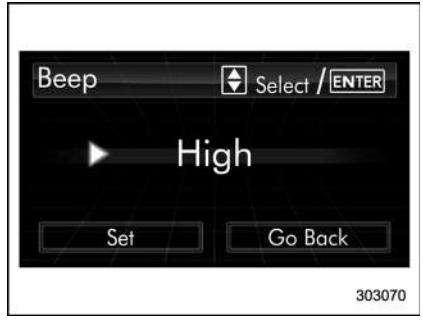

3. Push the ENTER button.

303071

4. Select an item by operating the "▲" or "▼" switch. Then push the ENTER button.

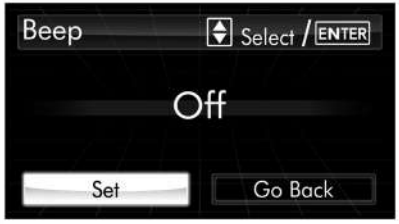

303072

5. Select "Set" by operating the "▼" switch, and confirm the setting by pushing the ENTER button.

303073

6. The system will notify you that the setting is complete.

■ Screen settings

The items in screen settings can be set. To change the items, operate the "▲" or "▼" switch, and then push the ENTER button.

▼ Preparation for screen settings

1. Turn the ignition switch to the "ON" position.
2. Push and hold the ENTER button to show the selection screen.

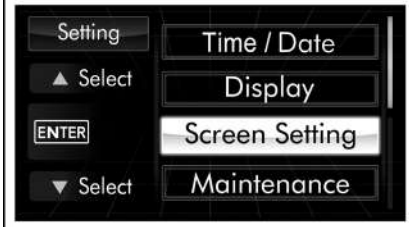

303074

3. After the selection screen is displayed, operate the "▲" or "▼" switch to show the "Screen Setting" item. Then, push the ENTER button.

▼ Top display setting

1. Perform the preparation steps according to "Preparation for screen settings" ☞3-65.

– CONTINUED –

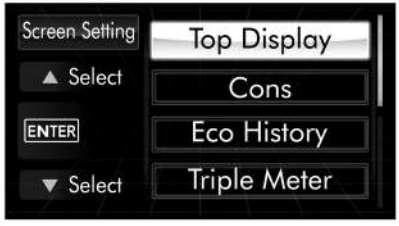

303075

2. Operate the "▲" or "▼" switch to select the "Top Display" item. Then push the ENTER button.

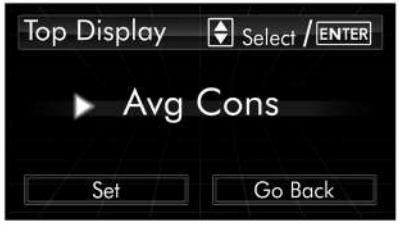

303076

3. Push the ENTER button once more.

303077

4. Select an item by operating the "▲" or "▼" switch. Then push the ENTER button.

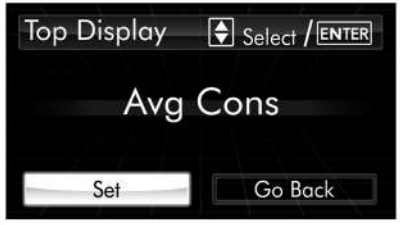

303078

5. Select "Set" by operating the "▼" switch, and confirm the setting by pushing the ENTER button.

303079

6. The system will notify you that the setting is complete.

▼ Fuel consumption screen setting

1. Perform the preparation steps according to "Preparation for screen settings" ☞3-65.

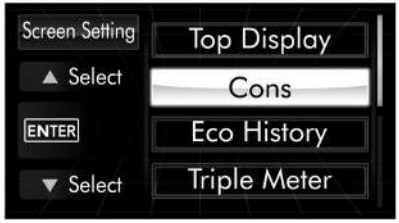

303080

2. Operate the "▲" or "▼" switch to select the "Cons" item. Then push the ENTER button.

303081

3. Push the ENTER button once more.

303082

4. Select the displayed configuration by operating the "▲" or "▼" switch. Then push the ENTER button.

303083

5. Select "Set" by operating the "▼" switch, and confirm the setting by pushing the ENTER button.

303084

6. The system will notify you that the setting is complete.

▼ Economy history setting

1. Perform the preparation steps according to "Preparation for screen settings" ☞3-65.

– CONTINUED –

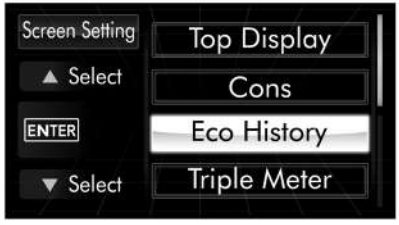

303085

2. Operate the "▲" or "▼" switch to select the "Eco History" item. Then push the ENTER button.

303086

3. Push the ENTER button once more.

303087

4. Select the time of the logged fuel consumption history by operating the "▲" or "▼" switch, and then push the ENTER button.

303088

5. Select "Go Back" by operating the "▲" switch.

303089

6. Select "Set" by operating the "▲" switch and confirm the setting by pushing the ENTER button.

303090

7. The system will notify you that the setting is complete.

▼ Triple meter setting

1. Perform the preparation steps according to “Preparation for screen settings” ☞3-65.

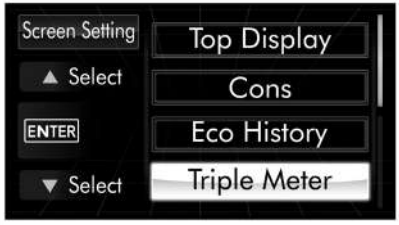

303091

2. Operate the “▲” or “▼” switch to select the “Triple Meter” item. Then push the ENTER button.

303092

3. Select the setting location (left, center or right) by operating the “▼” or “▲” switch. Then push the ENTER button.

NOTE

The same item cannot be selected for the left, center or right location.

303093

4. Select the preferred item by operating the “▲” or “▼” switch. Then push the ENTER button.

If you also want to change the setting for another location, repeat steps 3 and 4.

303094

5. Select “Set” by operating the “▼”

– CONTINUED –

switch, and confirm the setting by pushing the ENTER button.

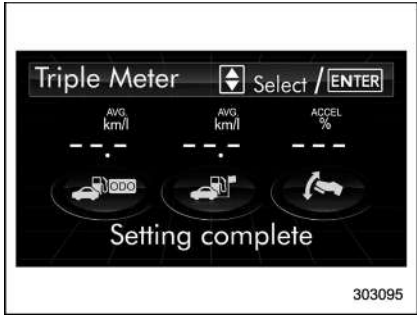

6. The system will notify you that the setting is complete.

▼ Clock/calendar screen setting

1. Perform the preparation steps according to “Preparation for screen settings” ☞3-65.

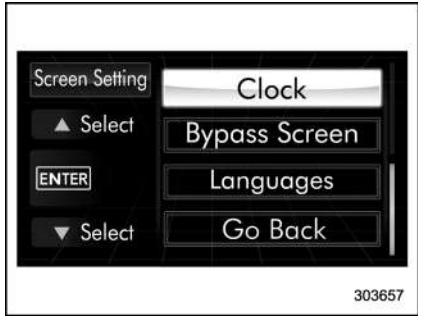

2. Operate the “▲” or “▼” switch to select the “Clock” item. Then push the ENTER button.

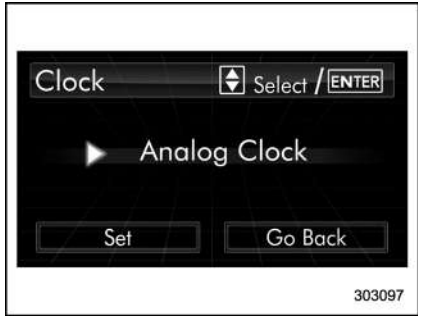

3. Push the ENTER button once more.

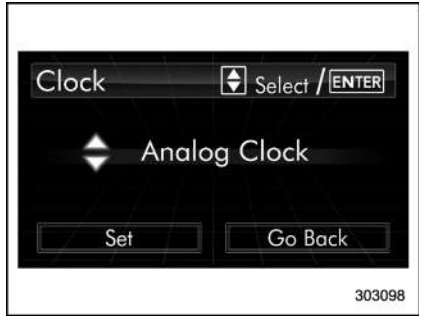

4. Select “Analog Clock”, “Digital Clock”, “Calendar” or “Off” by operating the “▼” switch. Then push the ENTER button.

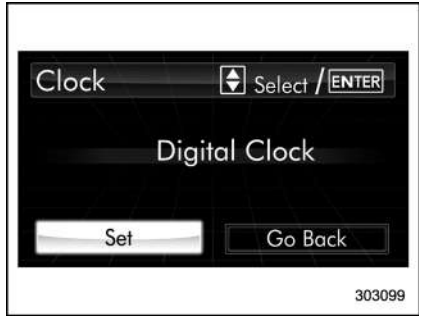

5. Select “Set” by operating the “▼” switch, and confirm the setting by pushing the ENTER button.

303100

6. The system will notify you that the setting is complete.

▼ Bypass screen setting

1. Perform the preparation steps according to “Preparation for screen settings” ☞3-65.

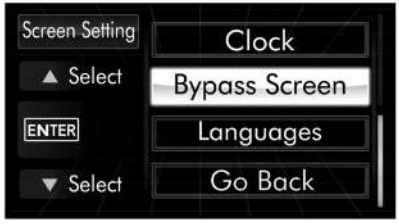

303658

2. Operate the “▲” or “▼” switch to select the “Bypass Screen” item. Then push the ENTER button.

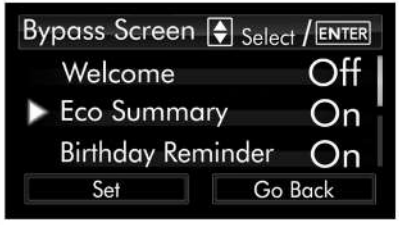

303102

3. Select the item to set by operating the “▲” or “▼” switches. Then push the ENTER button.

303103

4. Select “On” or “Off” by operating the “▲” or “▼” switch. Then push the ENTER button.

If you want to change setting for another item, repeat steps 3 and 4.

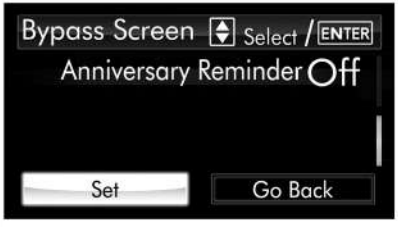

303387

5. Select “Set” by operating the “▲” or

– CONTINUED –

"▼" switch, and confirm the setting by pushing the ENTER button.

6. The system will notify you that the setting is complete.

▼ Language setting

1. Perform the preparation steps according to "Preparation for screen settings" ☞3-65.

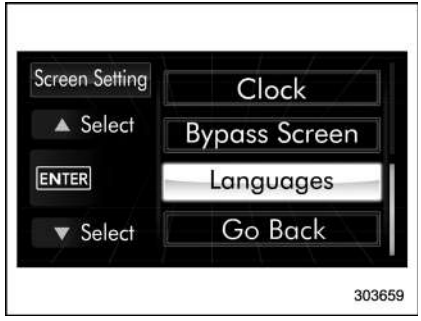

2. Operate the "▲" or "▼" switch to select the "Languages" item. Then push the ENTER button.

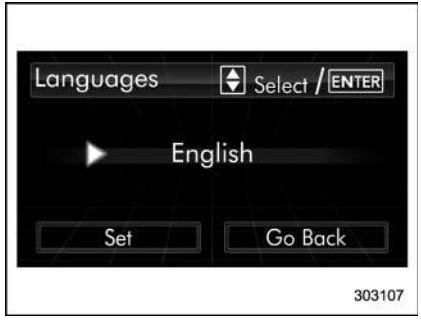

3. The current language setting will be displayed. Push the ENTER button to enter the language selection mode.

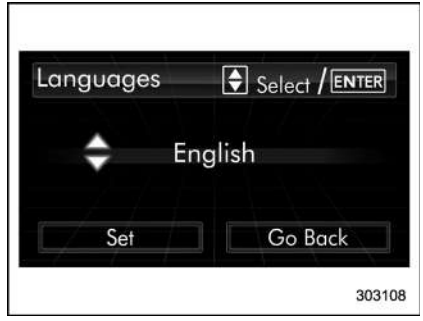

4. Select the preferred language by operating the "▲" or "▼" switch. Then push the ENTER button.

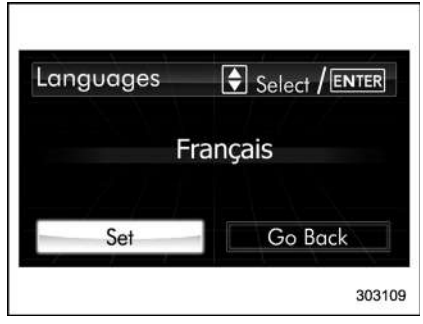

5. Select "Set" by operating the "▼" switch and confirm the setting by pushing the ENTER button.

303110

6. The system will notify you that the setting is complete.

■ Maintenance settings

The items in the maintenance settings can be set. To change the items, operate the "▲" or "▼" switch.

▼ Preparation for maintenance settings

1. Turn the ignition switch to the "ON" position.
2. Push and hold the ENTER button to show the selection screen.

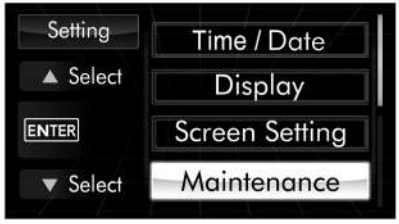

303111

3. After the selection screen is displayed, operate the "▲" or "▼" switch to show the "Maintenance" item. Then, push the ENTER button.

▼ Engine oil setting

1. Perform the preparation steps according to "Preparation for maintenance settings" ☞3-73.

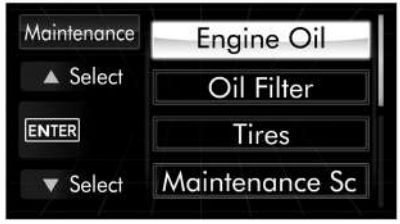

303112

2. Operate the "▲" or "▼" switch to select the "Engine Oil" item. Then push the ENTER button.

303697

3. Select the setting location (month, day, year or distance) by operating the "▼" or "▲" switch. Then push the ENTER button.

– CONTINUED –

303698

4. Select a number by operating the "▲" or "▼" switch. Then push the ENTER button. If you also want to change the setting for another location, repeat steps 3 and 4.

303699

5. Select "Set" by operating the "▲" or "▼" switch and confirm the setting by pushing the ENTER button.

303700

6. The system will notify you that the setting is complete.

NOTE

- **The notification will be displayed with information of both date and distance or either date or distance in accordance with the setting**
- **When "_ _" is selected for either the "Month", "Day", "Year" or "Distance" item instead of numbers, the set notification will be deactivated.**
- **If the notification continues for 15 days or more, the system will display "_ _" on the screen.**
- **When the distance announcement reaches 0 km, the display will show "0000" for the next 311 miles (500 km). After exceeding 311 miles (500 km), "_ _ _ _" will be displayed.**

▼ Oil filter setting

The setting procedure is the same as "Engine oil setting" ☞3-73, but select the "Oil Filter" item in step 2.

▼ Tires setting

The setting procedure is the same as "Engine oil setting" ☞3-73, but select the "Tires" item in step 2.

▼ Maintenance schedule setting

The setting procedure is the same as "Engine oil setting" ☞3-73, but select the "Maintenance Schedule" item in step 2.

▼ On/Off setting

1. Perform the preparation steps according to "Preparation for maintenance settings" ☞3-73.

303117

2. Operate the "▲" or "▼" switch to select the "On/Off" item. Then push the ENTER button.

303118

3. The current setting will be displayed. Push the ENTER button to enter the selection mode.

303119

4. Select "On" or "Off" by operating the "▲" or "▼" switch. Then push the ENTER button.

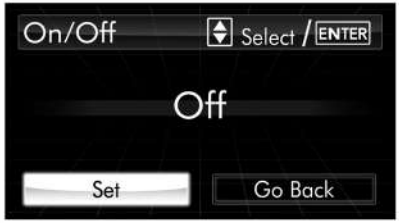

303120

5. Select "Set" by operating the "▼" switch, and confirm the setting by pushing the ENTER button.

303121

6. The system will notify you that the setting is complete.

▼ Clear setting

1. Perform the preparation steps according to "Preparation for maintenance settings" ☞3-73.

– CONTINUED –

2. Operate the "▲" or "▼" switch to select the "Clear All Settings" item. Then push the ENTER button.

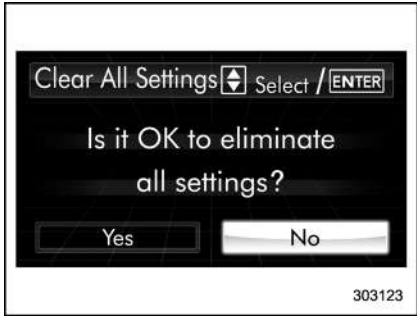

3. The system will prompt a Yes/No dialogue ("No" is selected first). To clear all maintenance settings, select "Yes" by operating the "▼" switch.

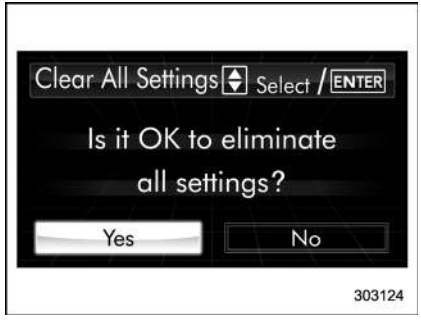

4. Confirm the setting by pushing the ENTER button.

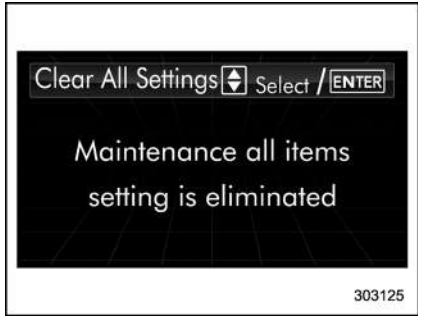

5. The system will notify you that the setting is complete.

■ Driving history registration

The items in the driving history can be registered. To change the items, operate the "▲" or "▼" switch, and then push the ENTER button.

1. Turn the ignition switch to the "ON" position.
2. Push and hold the ENTER button to show the selection screen.

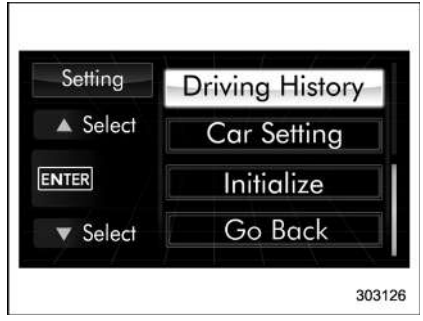

3. After the selection screen is displayed, operate the "▲" or "▼" switch to show the "Driving History" item. Then, push the ENTER button.

303701

4. Push the ENTER button once more to enter the setting mode.

303702

5. The system will notify you of the place to be selected for approximately 2 seconds.

303703

6. Select one of the registration lines by operating the "▲" or "▼" switch. Then push the ENTER button.

303704

7. To overwrite the previous registration, push the ENTER button. When registration is performed the first time, it is registered directly without a notification.

8. The system will notify you that the registration is complete.

■ Car settings

The items in the car settings can be set. To change the items, operate the "▲" or "▼" switch, and then push the ENTER button.

▼ Preparation for car settings

1. Turn the ignition switch to the "ON" position.
2. Push and hold the ENTER button to show the selection screen.

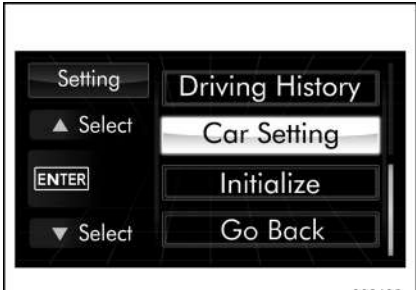

303132

3. After the selection screen is displayed, operate the "▲" or "▼" switch to show the "Car Setting" item. Then, push the ENTER button.

– CONTINUED –

▼ Keyless buzzer volume setting

1. Perform the preparation steps according to “Preparation for car settings” ☞3-77.

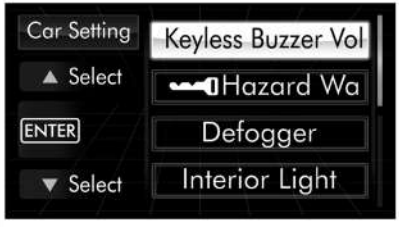

304658

2. Operate the “▲” or “▼” switch to select the “Keyless Buzzer Volume” item. Then push the ENTER button.

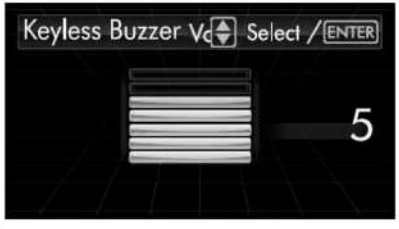

303706

3. Select a volume level by operating the “▲” or “▼” switch, and confirm the setting by pushing the ENTER button.

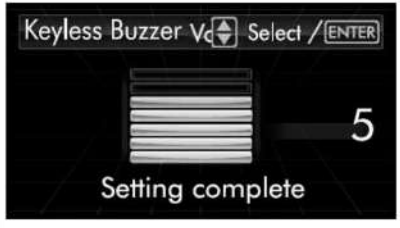

303707

4. The system will notify you that the setting is complete.

If the setting is not available, the following notification will be displayed. In this case, perform the setting procedure again.

303708

▼ Hazard warning flasher setting

1. Perform the preparation steps according to “Preparation for car settings” ☞3-77.

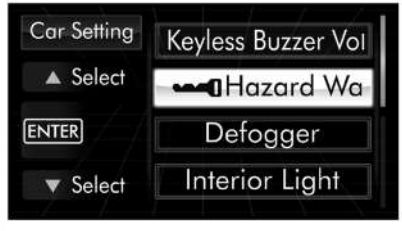

304659

2. Operate the “▲” or “▼” switch to select the “Hazard Warning Flasher” item.

Then push the ENTER button.

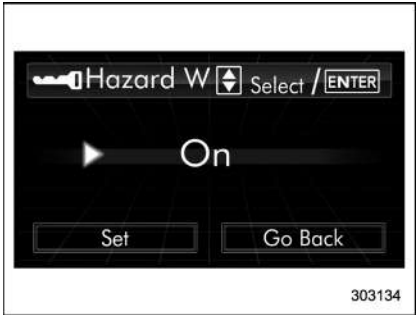

3. The current setting will be displayed. Push the ENTER button to enter the selection mode.

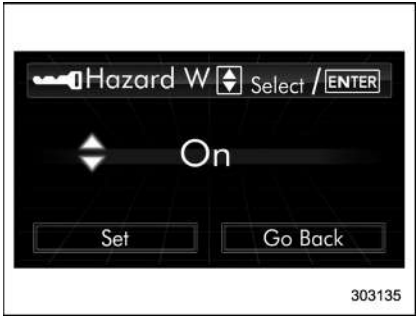

4. Select “On” or “Off” by operating the “▲” or “▼” switch. Then push the ENTER button.

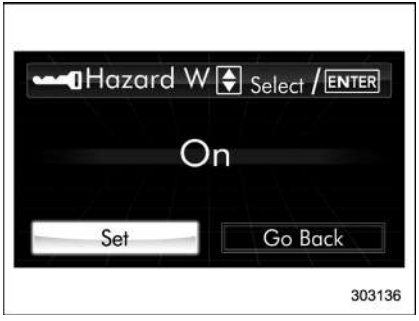

5. Select “Set” by operating the “▼” switch, and confirm the setting by pushing the ENTER button.

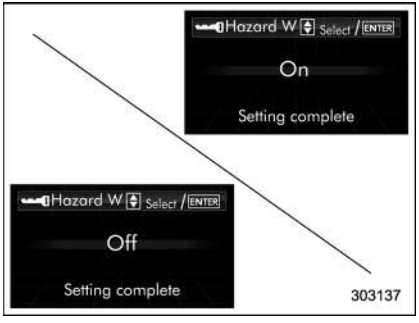

6. The system will notify you that the setting is complete.

If the setting is not available, the following notification will be displayed. In this case, perform the setting procedure again.

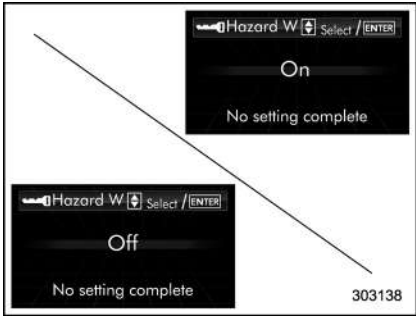

▼ Defogger setting

1. Perform the preparation steps according to “Preparation for car settings” ☞3-77.

– CONTINUED –

304660

2. Operate the "▲" or "▼" switch to select the "Defogger" item. Then push the ENTER button.

303146

3. The current setting will be displayed. Push the ENTER button to enter the selection mode.

303147

4. Select the preferred setting by operating the "▲" or "▼" switch. Then push the ENTER button.

303148

5. Select "Set" by operating the "▼" switch, and confirm the setting by pushing the ENTER button.

303149

6. The system will notify you that the setting is complete.
If the setting is not available, the following notification will be displayed. In this case, perform the setting procedure again.

303150

▼ Interior light off delay timer setting

1. Perform the preparation steps according to “Preparation for car settings” ☞3-77.

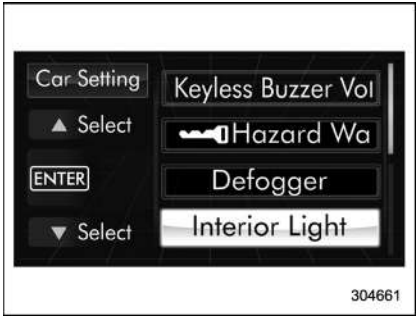

2. Operate the “▲” or “▼” switch to select the “Interior Light” item. Then push the ENTER button.

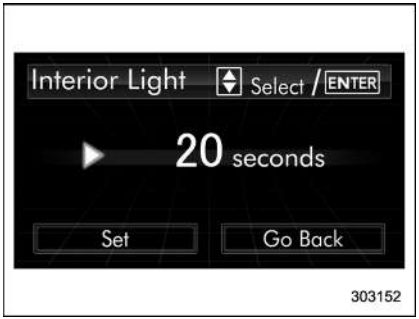

3. The current setting will be displayed. Push the ENTER button to enter the selection mode.

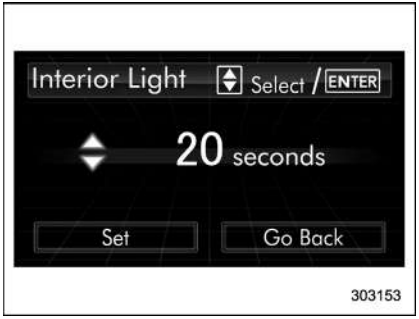

4. Select the preferred setting by operating the “▲” or “▼” switch. Then push the ENTER button.

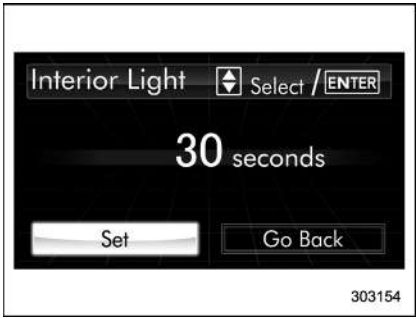

5. Select “Set” by operating the “▼” switch, and confirm the setting by pushing the ENTER button.

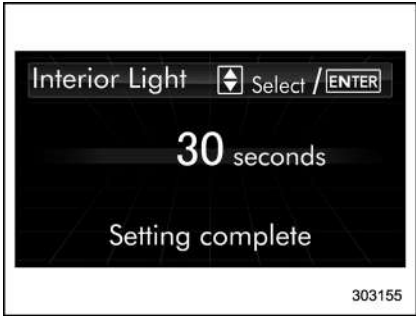

6. The system will notify you that the setting is complete.

If the setting is not available, the following notification will be displayed. In this case, perform the setting procedure again.

– CONTINUED –

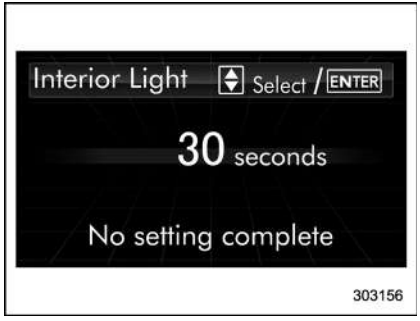

▼ **Auto light sensor sensitivity setting**

1. Perform the preparation steps according to “Preparation for car settings” ☞3-77.

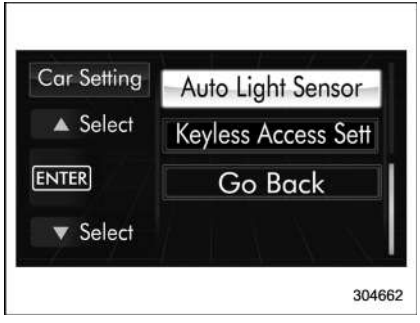

2. Operate the “▲” or “▼” switch to select the “Auto Light Sensor” item. Then push the ENTER button.

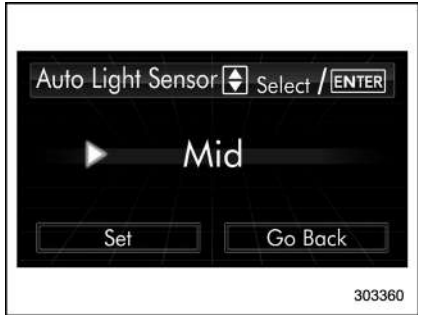

3. The current setting will be displayed. Push the ENTER button to enter the selection mode.

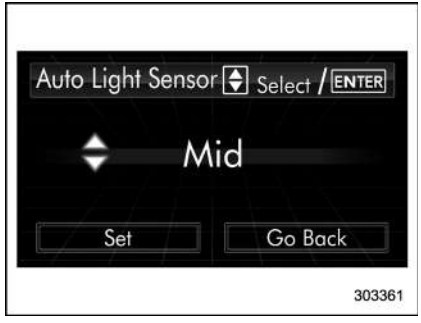

4. Select the preferred setting by operating the “▲” or “▼” switch. Then push the ENTER button.

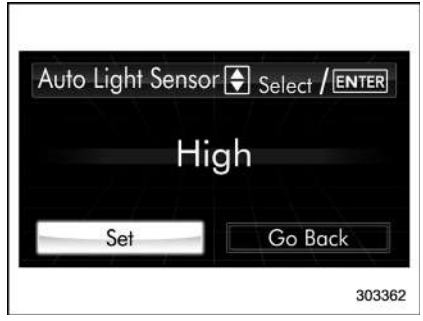

5. Select “Set” by operating the “▼” switch, and confirm the setting by pushing the ENTER button.

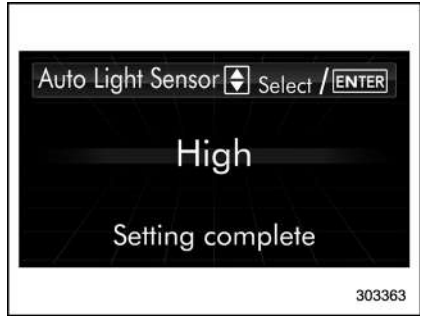

6. The system will notify you that the setting is complete.

If the setting is not available, the following notification will be displayed. In this case, perform the setting procedure again.

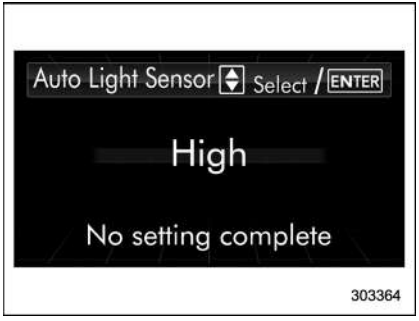

303364

▼ **Keyless access setting (models with "keyless access with push-button start system")**

▽ **Preparation for keyless access settings**

1. Perform the preparation steps according to "Preparation for car settings" ☞3-77.

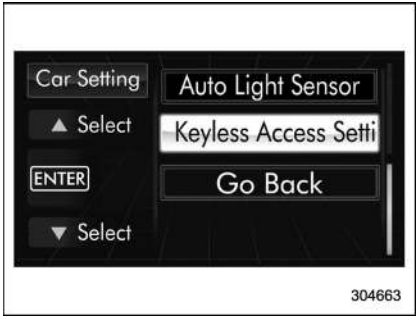

304663

2. Operate the "▲" or "▼" switch to select the "Keyless Access Setting" item. Then push the ENTER button.

▽ **Driver's door unlock setting**

1. Perform the preparation steps according to "Preparation for keyless access settings" ☞3-83.

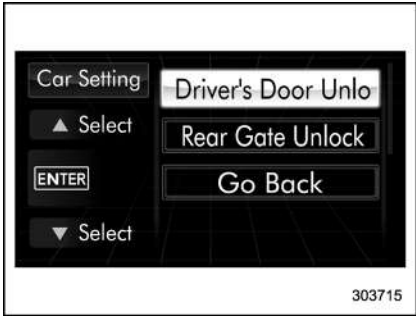

303715

2. Operate the "▲" or "▼" switch to select the "Driver's Door Unlock" item. Then push the ENTER button.

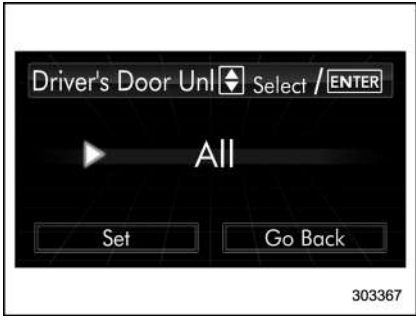

303367

3. The current setting will be displayed. Push the ENTER button to enter the selection mode.

– CONTINUED –

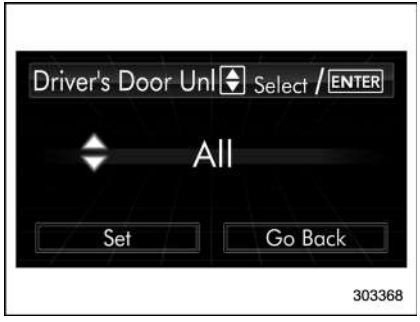

4. Select the preferred setting by operating the "▲" or "▼" switch. Then push the ENTER button.

5. Select "Set" by operating the "▼" switch, and confirm the setting by pushing the ENTER button.

6. The system will notify you that the setting is complete.

If the setting is not available, the following notification will be displayed. In this case, perform the setting procedure again.

▽ Rear gate unlock setting

1. Perform the preparation steps according to "Preparation for keyless access settings" ☞3-83.

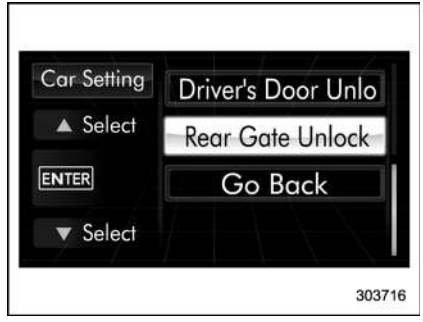

2. Operate the "▲" or "▼" switch to select the "Rear Gate Unlock" item. Then push the ENTER button.

303717

3. The current setting will be displayed. Push the ENTER button to enter the selection mode.

303718

4. Select the preferred setting by operating the "▲" or "▼" switch. Then push the ENTER button.

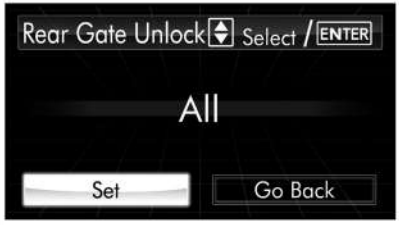

303719

5. Select "Set" by operating the "▼" switch, and confirm the setting by pushing the ENTER button.

303720

6. The system will notify you that the setting is complete.

If the setting is not available, the following notification will be displayed. In this case, perform the setting procedure again.

303721

■ Initialize

Items that have been set to your preference can be initialized. To select an initialization menu, operate the "▲" or "▼" switch as follows.

▼ Preparation for initialization

1. Turn the ignition switch to the "ON" position.
2. Push and hold the ENTER button to show the selection screen.

– CONTINUED –

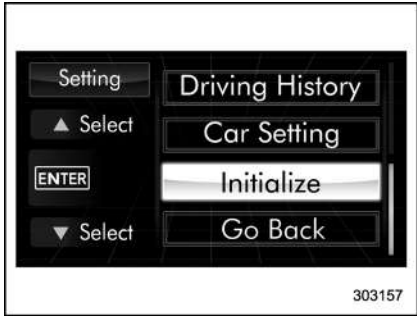

3. After the selection screen is displayed, operate the "▲" or "▼" switch to show the "Initialize" item. Then, push the ENTER button.

▼ Reset to factory default settings

1. Perform the preparation steps according to "Preparation for initialization" ☞3-85.

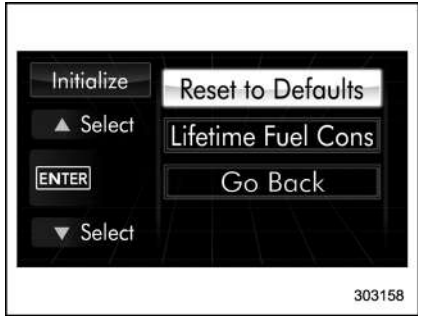

2. Operate the "▲" or "▼" switch to select the "Reset to Defaults" item. Then push the ENTER button.

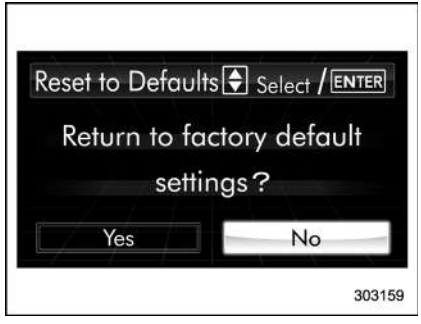

3. The system will prompt a Yes/No dialogue ("No" is selected first). To return to the factory default settings, select "Yes" by operating the "▼" switch.

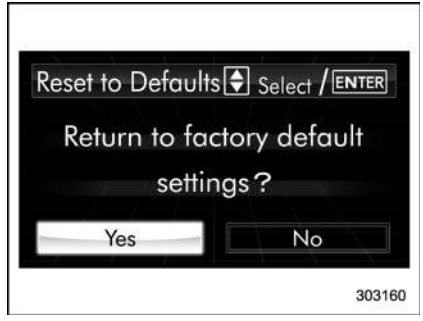

4. Confirm the setting by pushing the ENTER button.

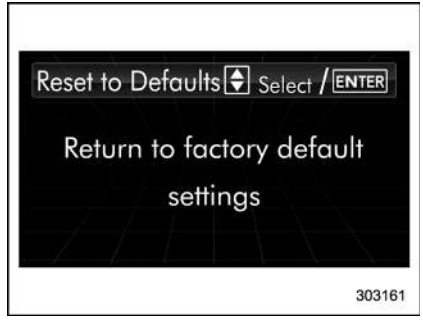

5. The system will notify you that the setting is complete.

▼ Lifetime fuel consumption resetting

1. Perform the preparation steps according to “Preparation for initialization” ☞3-85.

303162

2. Operate the “▲” or “▼” switch to select the “Lifetime Fuel Consumption Resetting” item. Then push the ENTER button.

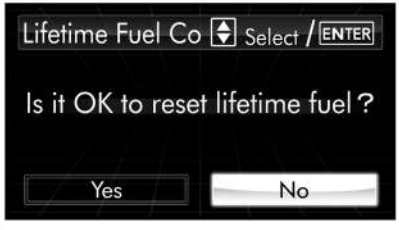

303163

3. The system will prompt a Yes/No dialogue (“No” is selected first). To reset the lifetime fuel consumption, select “Yes” by operating the “▼” switch.

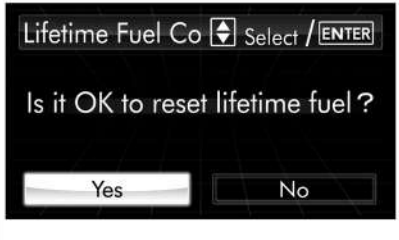

303164

4. Confirm the setting by pushing the ENTER button.

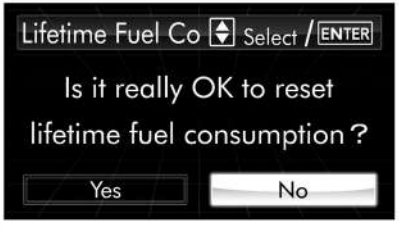

303165

5. Reconfirmation will be displayed. If you are sure you want to proceed, select “Yes” by operating the “▼” switch.

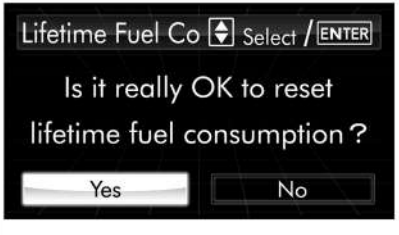

303166

6. Confirm the setting again by pushing the ENTER button.

– CONTINUED –

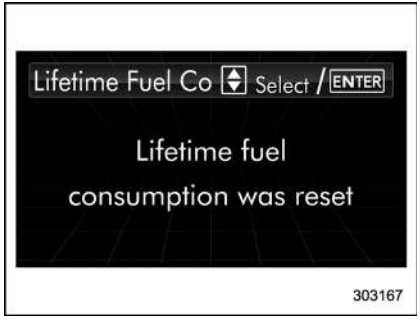

7. The system will notify you that the setting is complete.

Light control switch

CAUTION

- **Use of any lights for a long period of time while the engine is not running can cause the battery to discharge.**
- **Before leaving the vehicle, make sure that the lights are turned off. If the vehicle is left unattended for a long time with the lights illuminated, the battery may be discharged.**

Models with "keyless access with push-button start system":

The light control switch operates when the push-button ignition switch is in the "ACC" or "ON" position.

Regardless of the position of the light control switch, the illuminated lights are turned off when the push-button ignition switch is turned off.

Models without "keyless access with push-button start system":

The light control switch operates when the key is inserted in the ignition switch.

Regardless of the position of the light control switch, the illuminated lights are turned off when the key is removed from the ignition switch.

NOTE

The light control switch can be operated (except auto on/off headlights), even under the following conditions.

- **when the push-button ignition switch is turned off (models with "keyless access with push-button start system")**
- **when the key is not inserted into the ignition switch (models without "keyless access with push-button start system")**

If the driver's door is opened while the headlights are illuminated under such conditions, a chirp sound will inform the driver that the lights are illuminated.

■ Headlights

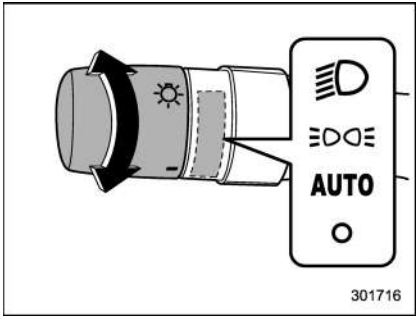

To turn on the headlights, turn the knob on the end of the turn signal lever.

"⇶" position

Instrument panel illumination, headlights, parking lights, front side marker lights, rear side marker lights, tail lights and license plate lights are on.

"≡DC≡" position

Instrument panel illumination, parking lights, front side marker lights, rear side marker lights, tail lights and license plate lights are on.

"AUTO" position: auto on/off headlights (if equipped)

When the ignition switch is in the "ON" position, the instrument panel illumination, headlights, parking lights, front side marker lights, rear side marker lights, tail lights and license plate lights are automatically on or off depending on the level of the ambient light.

"O" position

The headlights are all off.

NOTE

The sensitivity of the auto on/off headlights can be changed by a SUBARU dealer. Consult your SUBARU dealer for details. Also, for models with a multi function display, the setting can be changed using the display. For details, refer to "Auto light sensor sensitivity setting" ☞3-82.

▼ Welcome lighting function (if equipped)

The welcome lighting function turns on the low beam headlight for smooth approaching to or exiting from the vehicle at night or in a dark place.

The function is activated while all of the following conditions are met.

- The light control switch is in the "AUTO" position
- It is dark enough to turn on the auto on/off headlights

When approaching:

While the welcome lighting function is activated, the low beam headlights will automatically illuminate when unlocking the doors (including the rear gate) by using the remote keyless entry system.

The low beam headlights will remain illuminated for 30 seconds*1 and then turn off. However, if any of the following operations is done, the low beam headlights will turn off.

- The doors are locked.
- The light control switch is turned to a position other than "AUTO".
- The ignition switch is turned to the "ON" position.

When exiting:

While the welcome lighting function is activated, the low beam headlights will remain illuminated even when either of the following operation is done.

- The push-button ignition switch is turned to the "OFF" status (models with "keyless access with push-button start system")
- The key is pulled out from the ignition switch (models without "keyless access with push-button start system")

The low beam headlights will turn off under any of the following conditions.

– CONTINUED –

- 3 minutes have passed since the low beam headlights were illuminated by the welcome lighting function.
- 30 seconds have passed since the door is opened and closed.*1
- The light control switch is turned to a position other than “AUTO”.
- The locking procedure is performed twice. When performing the unlocking procedure after performing the locking procedure, perform the locking procedure twice again.

*1: The setting for the period of time in which the low beam headlights remain on by the welcome lighting function can be changed by a SUBARU dealer. Contact your SUBARU dealer for details.

▼ Sensor for the auto on/off headlights (if equipped)

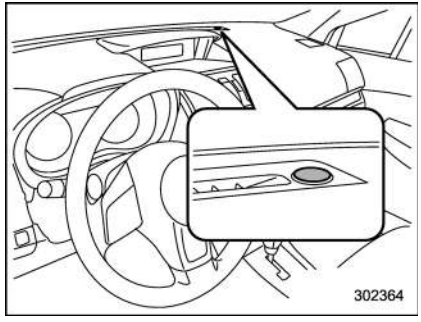

The sensor is on the instrument panel as shown in the illustration.

⚠ CAUTION

If any object is placed on or near the sensor, the sensor may not detect the level of the ambient light correctly and the auto on/off headlights may not operate properly.

■ High/low beam change (dimmer)

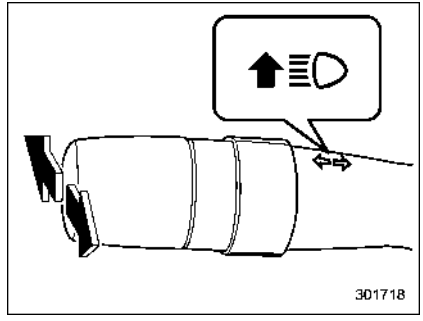

To change from low beam to high beam, push the turn signal lever forward. When the headlights are on high beam, the high beam indicator light “” on the combination meter is also on.

To switch back to low beam, pull the lever back to the center position.

■ Headlight flasher

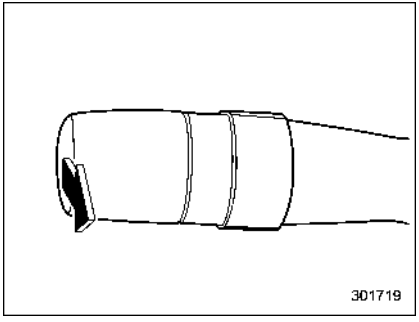

⚠ CAUTION

Do not hold the lever in the flashing position for more than just a few seconds.

To flash the headlights, pull the lever toward you and then release it. The high beam will stay on for as long as you hold the lever. The headlight flasher works even though the lighting switch is in the "O" (off) position.

When the headlights are on high beam, the high beam indicator light "" on the combination meter also illuminates.

■ Daytime running light system

⚠ WARNING

The brightness of the illumination of the high beam headlights is reduced by the daytime running light system. The light switch must always be turned to the "" position when it is dark outside.

The high beam headlights will automatically illuminate at reduced brightness when the following conditions are fulfilled.

- The engine is running.
- The parking brake is fully released.
- The light control switch is in the "AUTO" (if equipped), "" or off position.
- For CVT models, the select lever is in a position other than the "P" position.

NOTE

- **When the light switch is in the "" position, the instrument panel illumination, front side marker lights, tail lights and license plate lights are also illuminated.**
- **For models with the auto on/off headlights, while the light control switch is in the "AUTO" position and the system is activated to the auto-on mode depending on the ambient light level, the high beam headlights that have illuminated at reduced brightness turn off, and the low beam headlights turn on alternatively. At this time, the instrument panel illumination, front side marker lights, tail lights and license plate lights are also illuminated.**

Turn signal lever

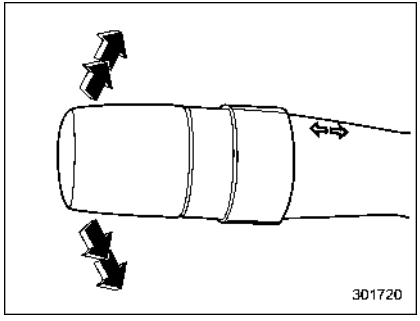

To activate the right turn signal, push the turn signal lever up. To activate the left turn signal, push the turn signal lever down. When the turn is finished, the lever will return automatically. If the lever does not return after cornering, return the lever to the neutral position by hand.

To signal a lane change, push the turn signal lever up or down slightly and hold it during the lane change. The turn signal indicator lights will flash in the direction of the turn or lane change. The lever will return automatically to the neutral position when you release it.

■ One-touch lane changer

To flash the turn signal and turn signal indicator light three times, push the turn signal lever up or down slightly and immediately release it.

The operational/non-operational setting of the one-touch lane changer's can be changed by a SUBARU dealer. Contact the nearest SUBARU dealer for details.

Illumination brightness control

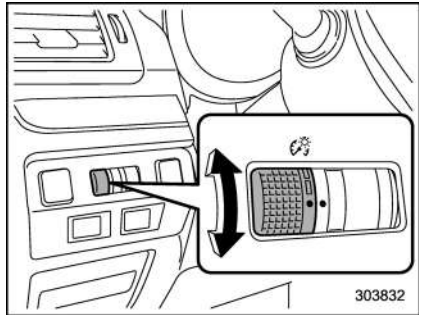

The illumination brightness of the instrument panel dims under the following conditions.

- when the light switch is in the "" or "" position
- when the light control switch is in the "AUTO" position and the headlights illuminate automatically (models with auto on/off headlights: Refer to "Headlights" ☞3-89.)

You can also adjust the illumination brightness for better visibility in the following ways.

To brighten, turn the control dial upward.

To darken, turn the control dial downward.

NOTE

- **When the control dial is turned fully upward, the illumination brightness becomes the maximum and the automatic dimming function does not work at all.**
- **The brightness setting is not canceled even when the ignition switch is turned to the "LOCK"/"OFF" position.**

Headlight beam leveler (if equipped)

■ Automatic headlight beam leveler (models with HID headlights)

The HID headlights generate more light than conventional halogen headlights.

Therefore a driver of an oncoming vehicle may experience too much glare if your headlight beam height adjustment is high when the vehicle is carrying a heavy load.

The automatic headlight beam leveler adjusts the headlight beam height automatically and optimally according to the load being carried by the vehicle.

Fog light switch

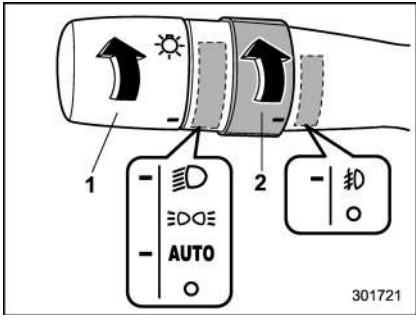

1) Headlight switch
2) Fog light switch

The front fog lights will turn on when the fog light switch is placed in the "" position while the headlights are in the following condition.

- while the headlight switch is in the "" position
- for models with the auto on/off headlights, while the headlight switch is in the "AUTO" position and the low beam headlights turn on automatically

To turn off the front fog lights, turn the switch back down to the "O" position.

– CONTINUED –

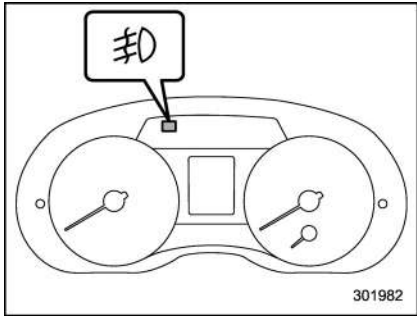

Indicator light (type A)

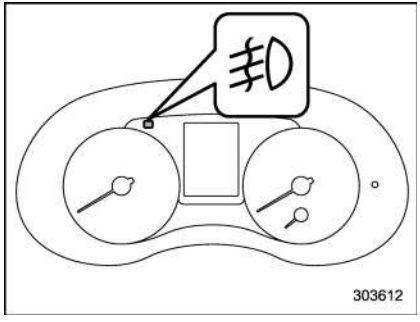

Indicator light (type B)

The indicator light on the combination meter will illuminate when the front fog lights are illuminated.

■ Steering responsive fog lights system (models with EyeSight system)

The steering responsive fog lights system automatically turns the front fog light on and off based on the steering angle and vehicle speed when entering a curve or driving on curved roads. The system is intended to help prevent accidents by enabling better visibility of curves ahead and early recognition of any disabled vehicles or other obstacles.

The front fog light on the inside of a curve will turn on if all of the following conditions are met.

- The low beam headlights are on
- The fog light switch is in the "O" position
- The low beam mode is selected
- The select lever is in the "D" position or the manual mode is selected
- The steering response fog lights system has not been deactivated
- The operating conditions such as the steering angle and vehicle speed are met

The front fog lights on both sides will turn on as usual if all of the following conditions are met.

- The low beam headlights are on
- The fog light switch is in the "⇶" position
- The low beam mode is selected

▼ Steering responsive fog lights OFF switch

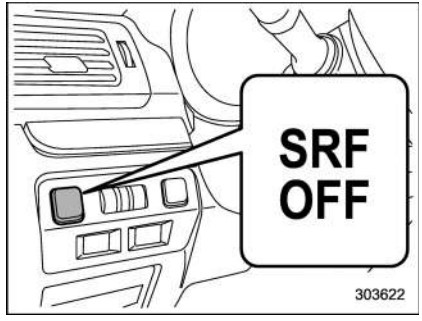

Steering responsive fog lights OFF switch

Press this switch to deactivate the steering responsive fog lights system. Press the switch again to activate the system.

▼ **Steering responsive fog lights OFF indicator**

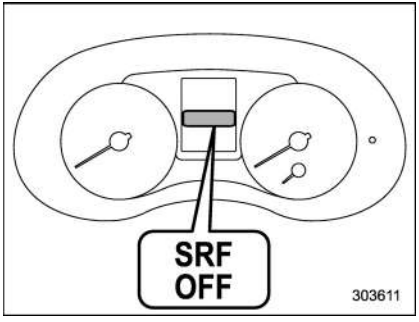

Steering responsive fog lights OFF indicator

This indicator appears when the steering responsive fog lights system is deactivated. This indicator disappears when the system is activated.

Wiper and washer

WARNING

In freezing weather, do not use the windshield washer until the windshield is sufficiently warmed by the defroster.

Otherwise the washer fluid can freeze on the windshield, blocking your view.

CAUTION

- **Do not operate the washer continuously for more than 10 seconds, or when the washer fluid tank is empty. This may cause overheating of the washer motor. Check the washer fluid level frequently, such as at fuel stops.**
- **Do not operate the wipers when the windshield or rear window is dry. This may scratch the glass, damage the rubber wiper blades and might cause the wiper motor to fail. Before operating the wiper on a dry windshield or rear window, always use the windshield washer.**
- **In freezing weather, be sure that the rubber wiper blades are not frozen to the windshield or rear window before switching on the wipers. Attempting to operate the wiper with the rubber wiper blades frozen to the window glass could cause not only the rubber wiper blades to be damaged but also might cause the wiper motor to fail. If the rubber wiper blades are frozen to the window glass, be sure to operate the defroster, windshield wiper deicer (if equipped) or rear window defogger before turning on the wiper.**
- **If the wipers stop during operation because of ice or some other obstruction on the window, this might cause the wiper motor to fail even if the wiper switch is turned off. If this occurs, promptly stop the vehicle in a safe place, turn the ignition switch to the “LOCK”/“OFF” position and clean the window glass to allow proper wiper operation.**
- **Use clean water if windshield washer fluid is unavailable. In areas where water freezes in**

– CONTINUED –

winter, use SUBARU Windshield Washer Fluid or the equivalent. Refer to "Windshield washer fluid" ☞11-28.

Also, when driving the vehicle when there are freezing temperatures, use non-freezing type wiper blades.

- Do not clean the wiper blades with gasoline or a solvent, such as paint thinner or benzine. This will cause deterioration of the wiper blades.

NOTE

- The windshield wiper motor is protected against overloads by a circuit breaker. If the motor operates continuously under an unusually heavy load, the circuit breaker may trip to stop the motor temporarily. If this happens, park your vehicle in a safe place, turn off the wiper switch, and wait for approximately 10 minutes. The circuit breaker will reset itself, and the wipers will again operate normally.
- Clean your rubber wiper blades and window glass periodically with a washer solution to prevent streaking, and to remove accumulations of road salt or road film. Operate the windshield washer for at least 1 second so that washer solution will be sprinkled all over the windshield or rear window.
- Grease, wax, insects or other material on the windshield or the rubber wiper blades results in jerky wiper operation and streaking on the glass. If you cannot remove those streaks after operating the washer or if the wiper operation is jerky, clean the outer surface of the windshield or rear window and the wiper blades using a sponge or soft cloth with a neutral detergent or mild-abrasive cleaner. After cleaning, rinse the window glass and rubber wiper blades with clean water. The glass is clean if no beads form on the glass when you rinse with water.
- If you cannot eliminate the streaking even after following this procedure, replace the rubber wiper blades with new ones. For replacement instructions, refer to "Replacement of wiper blades" ☞11-29.

■ Windshield wiper and washer switches

The wiper operates only when the ignition switch is in the "ON" or "ACC" position.

▼ Windshield wipers

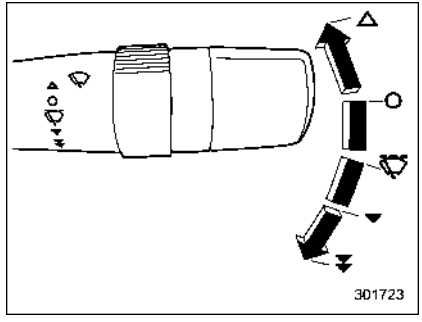

△ : Mist (for a single wipe)
○ : Off
: Intermittent
▼ : Low speed
▼▼ : High speed

To turn the wipers on, push the wiper control lever down.

To turn the wipers off, return the lever to the "○" position.

For a single wipe of the wipers, push the lever up. The wipers operate until you release the lever.

▼ **Wiper intermittent time control**

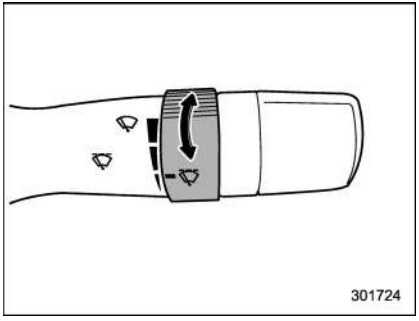

When the wiper switch is in the "" position, turn the dial to adjust the operating interval of the wiper. The operating interval can be adjusted in several steps from the shortest interval to the longest.

▼ **Windshield washer**

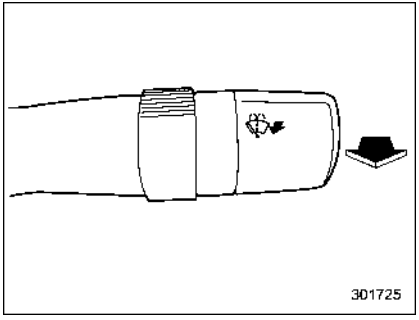

To wash the windshield, pull the wiper control lever toward you. The washer fluid sprays until you release the lever. The wipers operate while you pull the lever.

NOTE

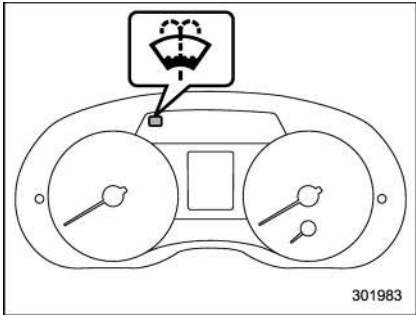

Windshield washer fluid warning light (type A)

– CONTINUED –

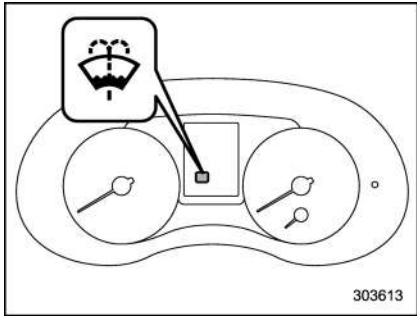

Windshield washer fluid warning light (type B)

The windshield washer fluid warning light illuminates when the washer fluid level in the tank has dropped to the lower limit. If the warning light illuminates, refill the tank with fluid. For the refilling procedure, refer to "Windshield washer fluid" ☞11-28.

■ Rear window wiper and washer switch

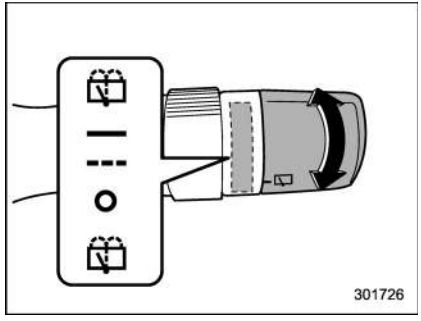

- : Washer (accompanied by wiper operation)
- — : Continuous
- --- : Intermittent
- O : Off
- : Washer (accompanied by wiper operation)

▼ Rear wiper

To turn the rear wiper on, turn the knob switch upward.

To turn the wiper off, return the knob switch to the "O" position.

With the switch turned to the "---" position, the rear wiper will operate intermittently at intervals corresponding to the vehicle speed. In this position, when you move the select lever to the "R" position (CVT models) or the shift lever to the reverse position (MT models), the rear wiper will switch to continuous operation. When you move the select lever/shift lever from the "R" (reverse) position to another position, the rear wiper will return to intermittent operation.

Reverse gear interlocked rear wiper:

Even if the rear wiper switch is in the off "O" position, if the front windshield wiper is operating continuously, the rear wiper will operate intermittently when you move the select lever/shift lever to the "R" (reverse) position.

The factory setting (default setting) of the reverse gear interlocked rear wiper is as follows.

- U.S.-spec. models: Non-operational
- Other models: Operational

This setting can be changed by a SUBARU dealer. Consult your SUBARU dealer for details.

CAUTION

Do not attach anything that disturbs the rear wiper operation on the rear gate. Doing so may damage the rear wiper when it operates.

▼ **Washer**

To wash the rear window while the rear wiper is operating, turn the knob switch upward to the "" position. The washer fluid sprays until you release the knob.

To wash the rear window when the rear wiper is not in use, turn the knob switch downward to the "" position. The washer fluid sprays and the wiper operates until you release the knob.

Mirrors

Always check that the inside and outside mirrors are properly adjusted before you start driving.

■ Inside mirror

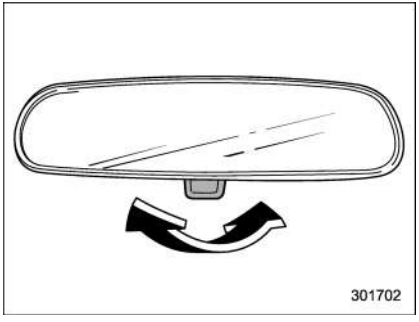

The inside mirror has a day and night position. Pull the tab at the bottom of the mirror toward you for the night position. Push it away for the day position. The night position reduces glare from headlights.

■ Outside mirrors

▼ **Convex mirror (passenger side)**

WARNING

Objects look smaller in a convex mirror and farther away than when viewed in a flat mirror. Do not use the convex mirror to judge the distance of vehicles behind you when changing lanes. Use the inside mirror (or glance backwards) to determine the actual size and distance of objects that you view in convex mirror.

– CONTINUED –

▼ **Remote control mirror switch**

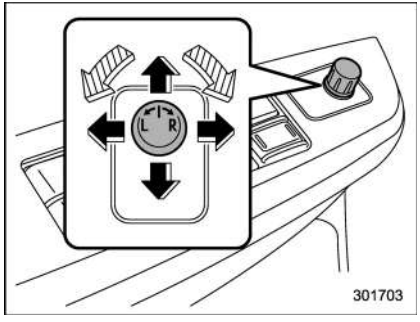

: Select side to adjust

: Direction control

The remote control mirrors operate only when the ignition switch is in the “ON” or “ACC” position.

1. Turn the control switch to the side that you want to adjust. “L” is for the left mirror, “R” is for the right mirror.
2. Move the control switch in the direction you want to move the mirror.
3. Return the control switch to the neutral position to prevent unintentional operation.

The mirrors can also be adjusted manually.

Defogger and deicer

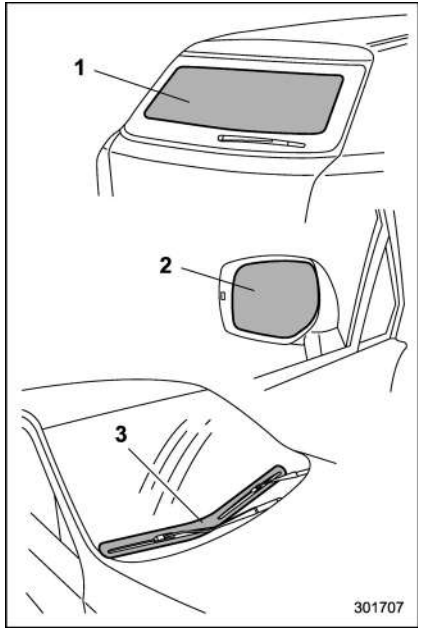

1) Rear window defogger
2) Outside mirror defogger (if equipped)
3) Windshield wiper deicer (if equipped)

The vehicle is equipped with a rear window defogger. Some models are also equipped with an outside mirror defogger and/or windshield wiper deicer. The defogger and deicer system is activated only when the ignition switch is in the “ON” position.

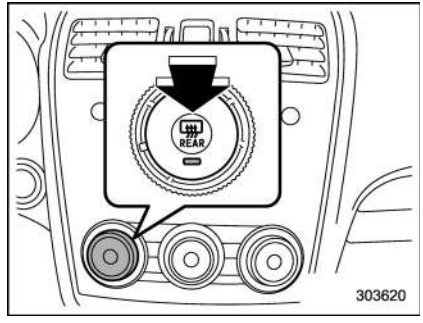

Climate control system type A and type B

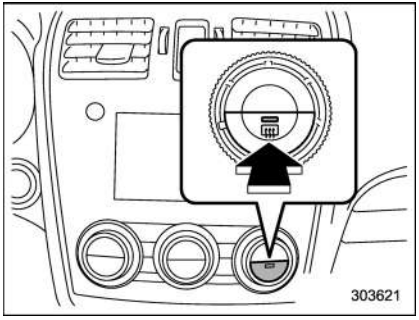

Climate control system type C and type D

To activate the defogger and deicer system, press the control switch that is located on the climate control panel. The rear window defogger, outside mirror defogger and windshield wiper deicer are activated simultaneously. The indicator light on the control switch illuminates while the defogger and deicer system is activated.

To turn them off, press the control switch again. They also turn off when the ignition switch is turned to the “ACC” or “LOCK”/ “OFF” position.

The defogger and deicer system will automatically shut off after approximately 15 minutes. If the rear window and the outside mirrors have been cleared and the windshield wiper blades have been deiced completely before that time, press the control switch to turn them off. If defrosting, defogging or deicing is not complete, you have to press the control switch to turn them on again.

For models with the automatic climate control system (type B, C and D), it is possible for the defogger and deicer system to be set to continuous operation mode by a SUBARU dealer. Consult your SUBARU dealer for details. Also, for models with a multi function display, the setting can be changed using the display. For details, refer to “Multi function display” ☞3-42.

If the battery voltage drops below the permissible level, continuous operation of the defogger and deicer system is canceled and the system stops operating.

⚠ CAUTION

- **To prevent the battery from being discharged, do not operate the defogger and deicer system continuously for any longer than necessary.**
- **Do not use sharp instruments or window cleaner containing abrasives to clean the inner surface of the rear window. They may damage the conductors printed on the window.**

NOTE

- **Turn on the defogger and deicer system if the wipers are frozen to the windshield.**
- **If the windshield is covered with snow, remove the snow so that the windshield wiper deicer works effectively.**
- **While the defogger and deicer system is in the continuous operation mode:**
  - **If the vehicle speed remains at 9 mph (15 km/h) or lower for 15 minutes, the windshield wiper deicer stops operating. However, the rear window defogger and outside mirror defogger maintain continuous operation.**
  - **If the battery voltage drops below the permissible level, the defogger and deicer system stops operating.**

Tilt/telescopic steering wheel

⚠ WARNING

- **Do not adjust the steering wheel tilt/telescopic position while driving. This may cause loss of vehicle control and result in personal injury.**
- **If the lever cannot be raised to the fixed position, adjust the steering wheel again. It is dangerous to drive without locking the steering wheel. This may cause loss of vehicle control and result in personal injury.**

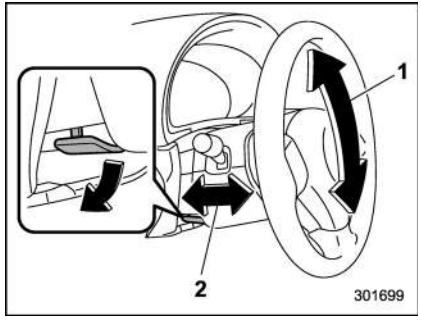

1) Tilt adjustment
2) Telescopic adjustment

1. Adjust the seat position. Refer to “Front seats” ☞1-2.
2. Pull the tilt/telescopic lock lever down.
3. Move the steering wheel to the desired level.
4. Pull the lever up to lock the steering wheel in place.
5. Make sure that the steering wheel is securely locked by moving it up and down, and forward and backward.

Horn

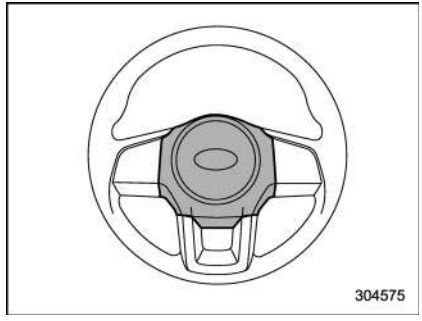

To sound the horn, push the horn pad.

Ventilator control 4-2
Center and side ventilators 4-2
Climate control panel 4-3
Type A 4-3
Type B 4-4
Type C 4-5
Type D 4-6
Automatic climate control operation (type B, C and D) 4-7
Type B 4-7
Type C and D 4-7
Operation tips 4-7
Sensors 4-8
Manual climate control operation 4-8
Airflow mode selection 4-8
Temperature control 4-9
Fan speed control 4-10
Air conditioner control 4-10
Air inlet selection 4-10
Defrosting 4-11
Type A and B 4-11
Type C 4-11
Type D 4-11
Operating tips for heater and air conditioner 4-11
Cleaning ventilation grille 4-11
Efficient cooling after parking in direct sunlight 4-11
Lubrication oil circulation in the refrigerant circuit 4-12
Checking air conditioning system before summer season 4-12
Cooling and dehumidifying in high humidity and low temperature weather conditions 4-12
Air conditioner compressor shut-off when engine is heavily loaded 4-12
Refrigerant for your climate control system 4-12
Air filtration system 4-12
Replacing an air filter 4-13

Ventilator control

■ Center and side ventilators

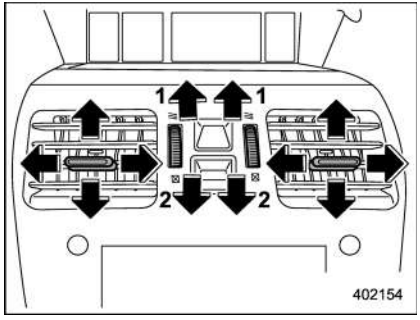

Center ventilators
1) Open
2) Close

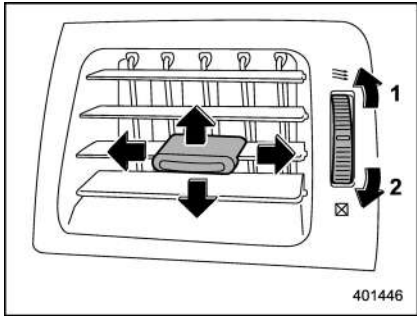

Side ventilators
1) Open
2) Close

To adjust the flow direction, move the tab. To open or close the ventilator, turn the thumb-wheel up or down.

Climate control panel

■ Type A

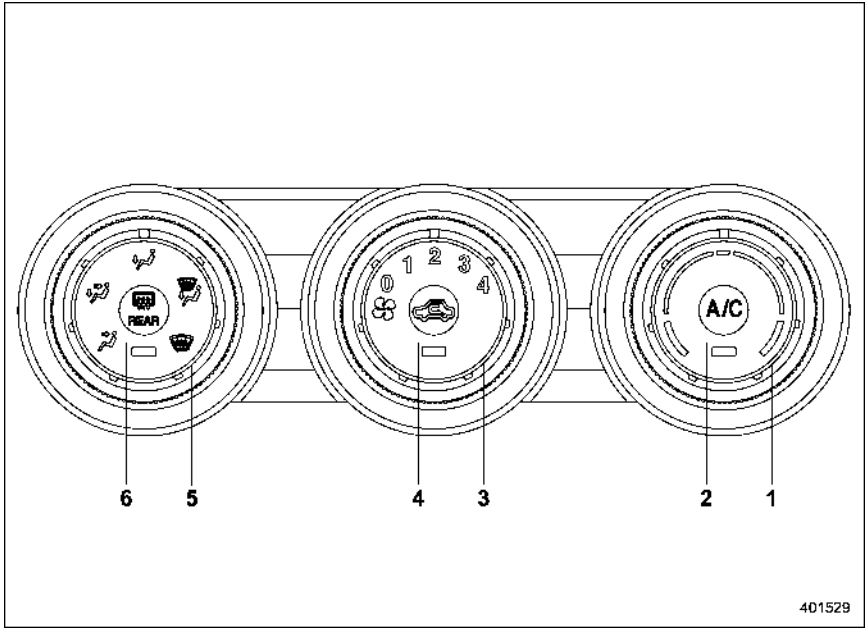

1) Temperature control dial (Refer to “Temperature control” ☞4-9.)
2) Air conditioner button (Refer to “Air conditioner control” ☞4-10.)
3) Fan speed control dial (Refer to “Fan speed control” ☞4-10.)
4) Air inlet selection button (Refer to “Air inlet selection” ☞4-10.)
5) Airflow mode selection dial (Refer to “Airflow mode selection” ☞4-8.)
6) Rear window defogger button (Refer to “Defogger and deicer” ☞3-100.)

– CONTINUED –

■ Type B

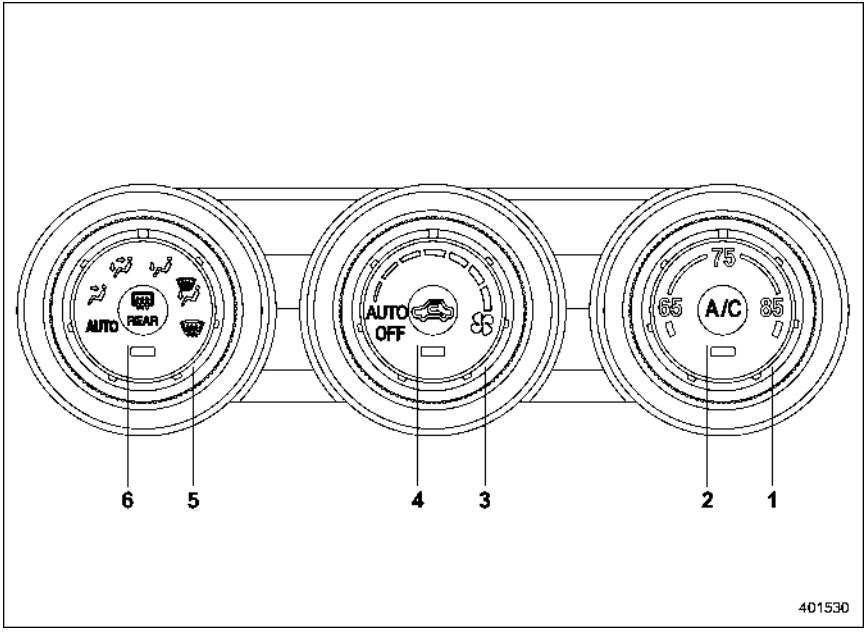

1) Temperature control dial (Refer to “Automatic climate control operation (type B, C and D)” ☞4-7 and/or “Temperature control” ☞4-9.)
2) Air conditioner button (Refer to “Air conditioner control” ☞4-10.)
3) Fan speed control dial (Refer to “Automatic climate control operation (type B, C and D)” ☞4-7 and/or “Fan speed control” ☞4-10.)
4) Air inlet selection button (Refer to “Air inlet selection” ☞4-10.)
5) Airflow mode selection dial (Refer to “Automatic climate control operation (type B, C and D)” ☞4-7 and/or “Airflow mode selection” ☞4-8.)
6) Rear window defogger button (Refer to “Defogger and deicer” ☞3-100.)

NOTE

The controllable temperature range may vary depending on the regional specifications of the vehicle.

■ Type C

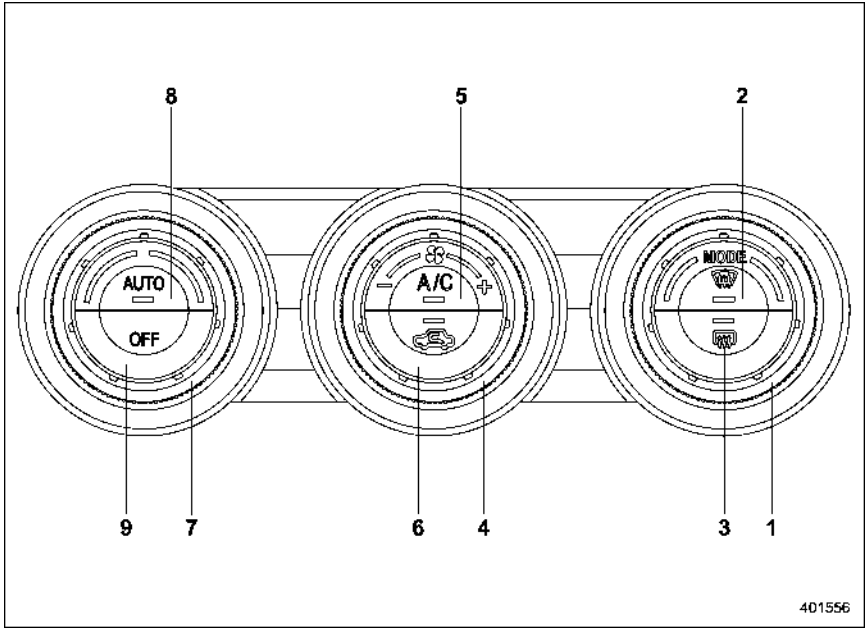

1) Airflow mode selection dial (Refer to “Airflow mode selection” ☞4-8.)
2) Defroster button (Refer to “Airflow mode selection” ☞4-8.)
3) Rear window defogger button (Refer to “Defogger and deicer” ☞3-100.)
4) Fan speed control dial (Refer to “Fan speed control” ☞4-10.)
5) Air conditioner button (Refer to “Air conditioner control” ☞4-10.)
6) Air inlet selection button (Refer to “Air inlet selection” ☞4-10.)
7) Temperature control dial (Refer to “Automatic climate control operation (type B, C and D)” ☞4-7 and/or “Temperature control” ☞4-9.)
8) AUTO button (Refer to “Automatic climate control operation (type B, C and D)” ☞4-7.)
9) OFF button (Refer to “Automatic climate control operation (type B, C and D)” ☞4-7.)

– CONTINUED –

■ Type D

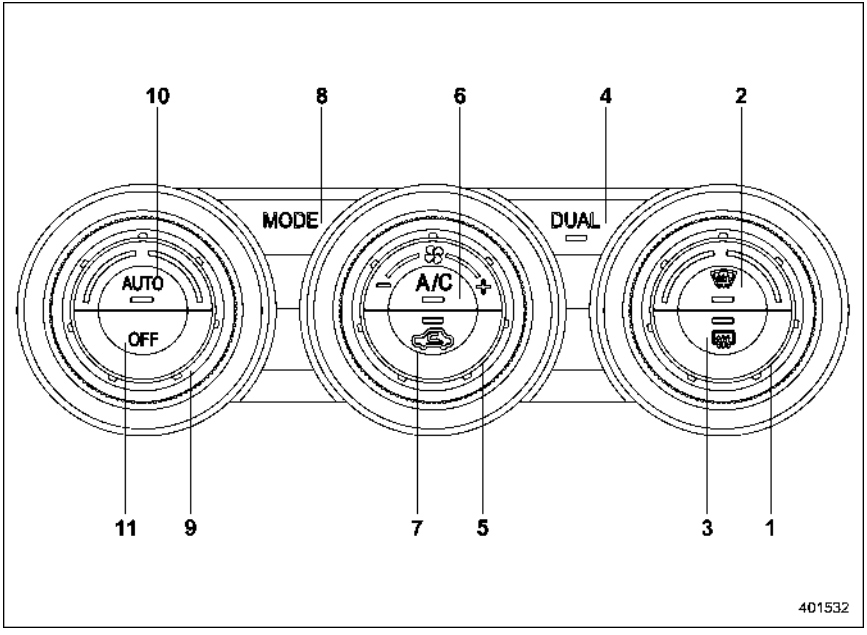

1) Temperature control dial (Refer to “Automatic climate control operation (type B, C and D)” ☞4-7 and/or “Temperature control” ☞4-9.)
2) Defroster button (Refer to “Airflow mode selection” ☞4-8.)
3) Rear window defogger button (Refer to “Defogger and deicer” ☞3-100.)
4) DUAL mode button (Refer to ““DUAL” mode (type D)” ☞4-10.)
5) Fan speed control dial (Refer to “Fan speed control” ☞4-10.)
6) Air conditioner button (Refer to “Air conditioner control” ☞4-10.)
7) Air inlet selection button (Refer to “Air inlet selection” ☞4-10.)
8) Airflow mode selection button (Refer to “Airflow mode selection” ☞4-8.)
9) Temperature control dial (Refer to “Automatic climate control operation (type B, C and D)” ☞4-7 and/or “Temperature control” ☞4-9.)
10) AUTO button (Refer to “Automatic climate control operation (type B, C and D)” ☞4-7.)
11) OFF button (Refer to “Automatic climate control operation (type B, C and D)” ☞4-7.)

Automatic climate control operation (type B, C and D)

When this mode is selected, the fan speed, airflow distribution, air-inlet control, and air conditioner compressor operation are automatically controlled. To activate this mode, perform the following.

■ Type B

1. Turn the airflow mode selection dial and fan speed control dial to the “AUTO” position.
2. Set the preferred temperature using the temperature control dial.

NOTE

- **Each function can be individually set to the AUTO mode independently of the other functions. Any function set to the AUTO mode is controlled automatically. Any function not set to the AUTO mode can be manually adjusted as desired.**
- **The controllable temperature range may vary depending on the regional specifications of the vehicle.**

To turn off the climate control system, turn the fan speed control dial to the “OFF” position. Then the air inlet selection will be set as follows.

- when the AUTO mode is selected: OFF (outside air)
- when the AUTO mode is not selected: the mode that was selected when turning off the climate system will be selected.

■ Type C and D

1. Depress the “AUTO” button. The indicator light “FULL AUTO” on the display illuminates.
2. Set the preferred temperature using the temperature control dial.

NOTE

- **The controllable temperature range may vary depending on the regional specifications of the vehicle.**
- **If you operate any of the buttons on the control panel other than the “OFF” button, rear window defogger button and temperature control dial(s) during FULL AUTO mode operation, the “FULL” indicator light on the control panel will turn off and the “AUTO” indicator light will remain illuminated. You can then manually control the system as desired using the button you operated. To change the system back to the FULL AUTO mode, press the “AUTO” button.**

To turn off the climate control system, press the “OFF” button. Then the air inlet selection will be set to OFF (outside air).

■ Operation tips

- Operate the automatic climate control system when the engine is running.
- Even when cooling is not necessary, the air conditioner compressor will automatically turn on if the temperature is set much lower than the current outlet air temperature. Even in this case, the “A/C” indicator light on the control panel illuminates.

– CONTINUED –

■ Sensors

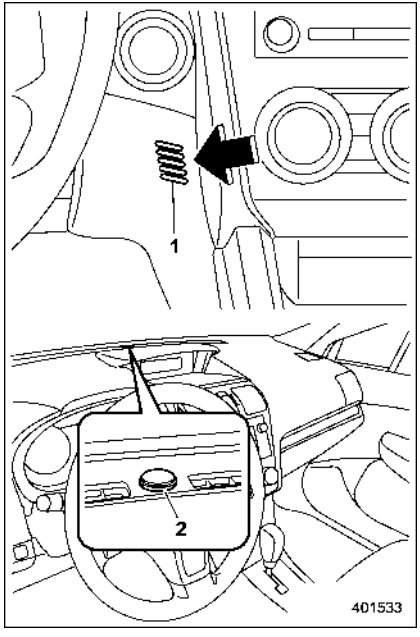

1) Interior air temperature sensor
2) Solar sensor

The automatic climate control system employs several sensors. These sensors are delicate. If they are not treated properly and become damaged, the system may not be able to control the interior temperature correctly. To avoid damaging the sensors, observe the following precautions.

– Do not subject the sensors to impact.
– Keep water away from the sensors.
– Do not cover the sensors.

The sensors are located as follows.

– Solar sensor: beside the windshield defroster grille
– Interior air temperature sensor: next to the steering column
– Outside temperature sensor: near the front bumper opening

Manual climate control operation

■ Airflow mode selection

To select the airflow mode:

Type A, B and C: Turn the airflow mode selection dial.

Type D: Press the airflow mode selection button.

To select the defrost mode:

Type A and B: Turn the airflow mode selection dial.

Type C and D: Press the defroster button.

Airflow modes are as follows.

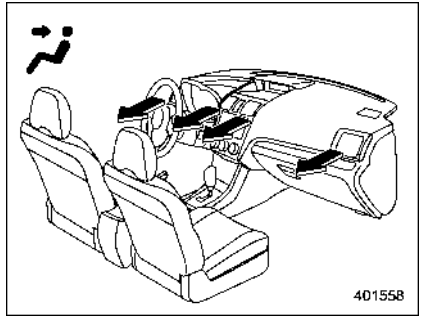

(Ventilation): Instrument panel outlets

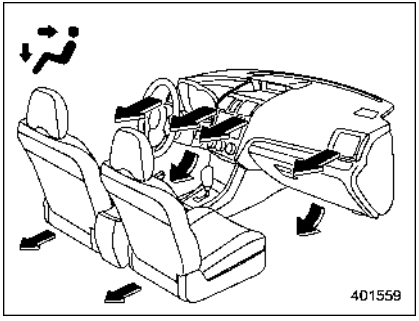

(Bi-level): Instrument panel outlets and foot outlets

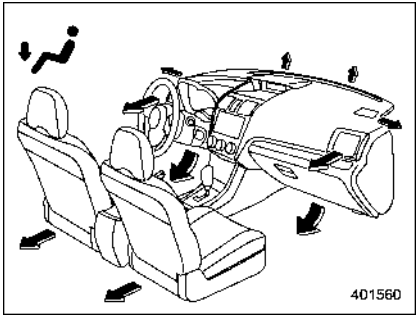

(Heat): Foot outlets, both side outlets of the instrument panel and some through windshield defroster outlets (A small amount of air flows to the windshield and both side windows to prevent fogging.)

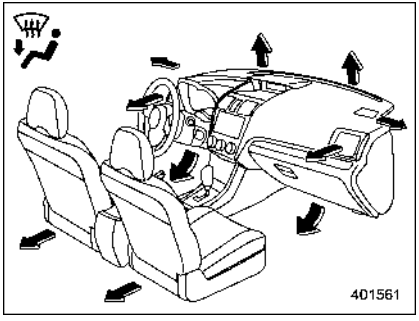

(Heat-def): Windshield defroster outlets, foot outlets and both side outlets of the instrument panel (Refer to “Defrosting” ☞4-11.)

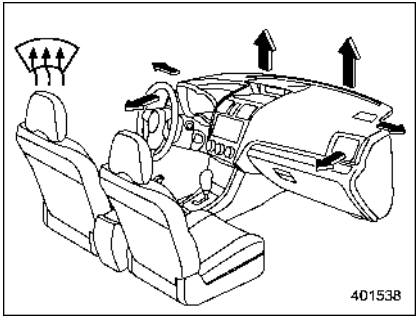

(Defrost): Windshield defroster outlets and both side outlets of the instrument panel (Refer to “Defrosting” ☞4-11.)

■ Temperature control

▼ Type A

Turn the temperature control dial over a range from the blue side (cool) to red side (warm) to regulate the temperature of airflow from the air outlets.

▼ Type B, C and D

Turn the temperature control dial to set the preferred interior temperature. With the dial set to your preferred temperature, the system automatically adjusts the temperature of air supplied from the outlets so that the preferred temperature is achieved and maintained.

If the dial is turned fully counterclockwise, the system provides maximum cooling performance. If the dial is turned fully clockwise, the system provides maximum heating performance.

NOTE

The controllable temperature range may vary depending on the regional specifications of the vehicle.

– CONTINUED –

▼ **“DUAL” mode (type D)**

You can change the setting of the driver’s side and front passenger’s side temperature independently by selecting the “DUAL” mode.

You can select the “DUAL” mode by performing either of the following procedures.

- Press the “DUAL” button
- Turn the passenger’s side temperature control dial

The “DUAL” mode can be canceled by pressing the “DUAL” button.

When the “DUAL” mode is selected:

Turn the driver’s side dial to set the driver’s side temperature. Turn the front passenger’s side dial to set the front passenger’s side temperature.

When the “DUAL” mode is canceled:

Set the desired temperature by turning the driver’s side dial.

■ Fan speed control

The fan operates only when the ignition switch is in the “ON” position. Select the preferred fan speed by turning the fan speed control dial.

■ Air conditioner control

The air conditioner operates only when the engine is running.

Press the air conditioner button while the fan is in operation to turn on the air conditioner. When the air conditioner is on, the “A/C” indicator light illuminates.

To turn off the air conditioner, press the button again.

NOTE

For efficient defogging or dehumidifying in cold weather, turn on the air conditioner. However, if the ambient temperature decreases to approximately 32°F (0°C), the air conditioner compressor will stop operating.

■ Air inlet selection

Select the air inlet by pressing the air inlet selection button.

ON position (recirculation): Interior air is recirculated inside the vehicle. Press the air inlet selection button to the ON position for fast cooling with the air conditioner or when driving on a dusty road.

OFF position (outside air): Outside air is drawn into the passenger compartment. Press the air inlet selection button to the OFF position when the interior has cooled to a comfortable temperature and the road is no longer dusty.

⚠ WARNING

Continued operation in the ON position may fog up the windows. Switch to the OFF position as soon as the outside conditions are no longer dusty.

NOTE

- **When the indicator light on the air inlet selection button is flashing at engine starting, a malfunction might be occurring in the electrical system. Contact your SUBARU dealer for inspection.**
- **The indicator light on the air inlet selection button may flash in the following cases. However, this does not indicate a malfunction.**
  - **After the vehicle battery has been disconnected and reconnected.**
  - **When the vehicle battery voltage is low.**

Defrosting

■ Type A and B

Select the "" or "" mode by turning the airflow mode selection dial to defrost or dehumidify the windshield and front door windows.

■ Type C

Select the "" mode by pressing the defroster button, or select the "" mode by turning the airflow mode selection dial to defrost or dehumidify the windshield and front door windows.

■ Type D

Select the "" mode by pressing the defroster button, or select the "" mode by pressing the airflow mode selection button to defrost or dehumidify the windshield and front door windows.

NOTE

• When the "" or "" mode is selected, the air conditioner compressor operates automatically regardless of the position of the air conditioner button to defrost the windshield more quickly. However the indicator on the air conditioner button will not illuminate. At the same time, the air inlet selection is automatically set to the outside air mode.

For type A climate control system, in this state:

– You cannot stop the air conditioner compressor by pressing the air conditioner button.

– You cannot select the recirculation mode by pressing the air inlet selection button.

• For type C and D climate control system, after defrosting the windshield by pressing the defroster button "", pressing the button again returns the system to the setting that had been selected before the defroster was activated.

Operating tips for heater and air conditioner

■ Cleaning ventilation grille

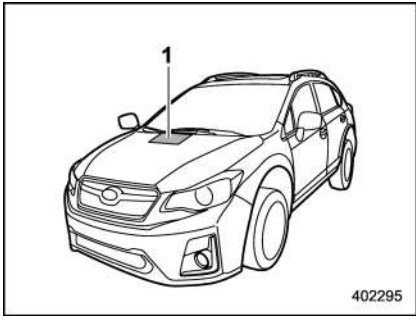

1) Front ventilation inlet grille

Always keep the front ventilation inlet grille free of snow, leaves, or other obstructions to ensure efficient heating and defrosting. Since the condenser is located in front of the radiator, this area should be kept clean because cooling performance is impaired by any accumulation of insects and leaves on the condenser.

■ Efficient cooling after parking in direct sunlight

After parking in direct sunlight, drive with the windows open for a few minutes to

– CONTINUED –

allow outside air to circulate into the heated interior. This results in quicker cooling by the air conditioner. Keep the windows closed during the operation of the air conditioner for maximum cooling efficiency.

■ Lubrication oil circulation in the refrigerant circuit

Operate the air conditioner compressor at a low engine speed (at idle or low driving speeds) a few minutes each month during the off-season to circulate its oil.

■ Checking air conditioning system before summer season

Check the air conditioner unit for refrigerant leaks, hose conditions, and proper operation each spring. Have the air conditioning system checked by your SUBARU dealer.

■ Cooling and dehumidifying in high humidity and low temperature weather conditions

Under certain weather conditions (high relative humidity, low temperatures, etc.) a small amount of water vapor emission from the air outlets may be noticed. This condition is normal and does not indicate any problem with the air conditioning system.

■ Air conditioner compressor shut-off when engine is heavily loaded

To improve acceleration and gas mileage, the air conditioner compressor is designed to temporarily shut off during air conditioner operation whenever the accelerator is fully depressed such as during rapid acceleration or when driving on a steep upgrade.

■ Refrigerant for your climate control system

Your air conditioner uses ozone friendly refrigerant HFC134a. Therefore, the method of adding, changing or checking the refrigerant is different from the method for CFC12 (freon). Consult your SUBARU dealer for service. Repairs needed as a result of using the wrong refrigerant are not covered under warranty.

Air filtration system

Your vehicle's air conditioning system is equipped with an air filtration system. Replace the air filter element according to the replacement schedule found in the "Warranty and Maintenance Booklet". This schedule should be followed to maintain the filter's dust collection ability. Under extremely dusty conditions, the filter should be replaced more frequently. Have your filter checked or replaced by your SUBARU dealer. For replacement, use only a genuine SUBARU air filter kit.

⚠ CAUTION

Contact your SUBARU dealer if the following occurs, even if it is not yet time to change the filter:

- **Reduction of the airflow through the vents.**
- **Windshield gets easily fogged or misted.**

NOTE

The filter can influence the air conditioning, heating and defroster performance if not properly maintained.

■ Replacing an air filter

1. Remove the glove box.

NOTE

We recommend that you take measures to protect the center console with masking tape first, so that you avoid scratching the center console with the glove box.

(1) Open the glove box.

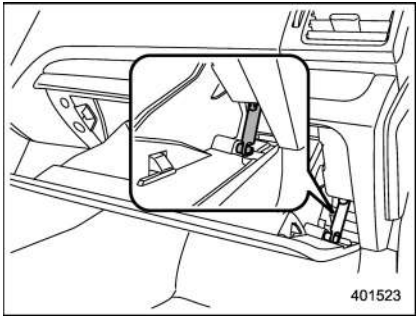

(2) Remove the damper shaft from the glove box.

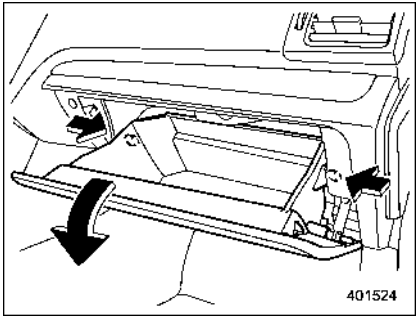

(3) Push in the stoppers located on both sides of the glove box and then pull down the glove box as far as it will go.

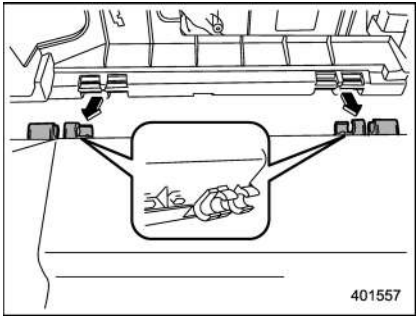

(4) Pull out the glove box horizontally and remove the hinge portion. When doing this, be careful not to damage the hinge.

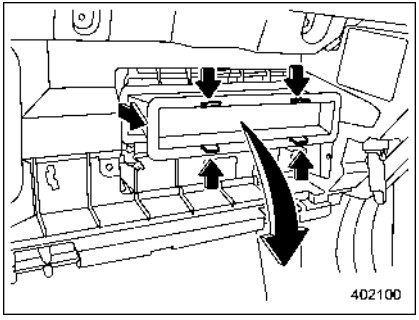

2. Remove the air filter according to the following procedure in order to prevent dust on the air cleaner from falling to the inside of its housing.

(1) Push in the four stoppers to unlock, and then slowly pull out the air filter 4 in (10 cm) from the housing.

(2) Completely pull out the air filter by gently tilting the front side of the air filter downward.

– CONTINUED –

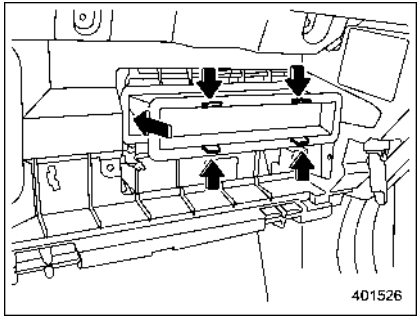

3. Replace the air filter element with a new one.

CAUTION

The arrow mark on the filter must point UP.

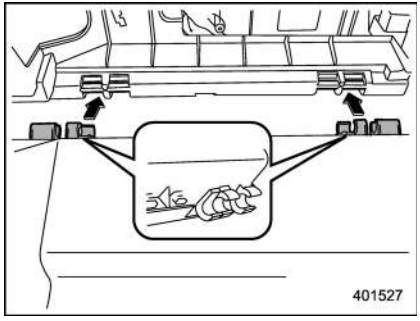

4. Reinstall the glove box, and connect the damper shaft.
5. Close the glove box.

Antenna 5-2
Roof antenna (for Rod type) 5-2
Roof antenna (for Shark fin type) 5-2
Audio set 5-3
Base display audio set (if equipped) 5-4
STARLINK™ 7.0 Multimedia Plus audio set (U.S. spec. models only, if equipped) 5-6
Tips for operating the audio/visual system 5-7
Basic information before use 5-15
Basic operation 5-18
Unit settings 5-19
SUBARU STARLINK (if equipped) 5-26
AM/FM radio 5-28
SiriusXM Satellite Radio (if equipped) 5-37
aha™ by HARMAN 5-43
Pandora® (if equipped) 5-49
CD 5-52
USB memory 5-54
iPod 5-55
Bluetooth audio 5-57
AUX 5-60
Steering switches for audio 5-62
Bluetooth® settings 5-65
Regulatory information 5-65
Registering/connecting Bluetooth® device 5-65
Setting Bluetooth details 5-68
Hands-free phone system 5-70
Control screen 5-71
Registering/connecting a Bluetooth phone 5-72
Using the phone switch/microphone 5-72
How to change the hands-free phone system 5-73
Making a call 5-73
Receiving a call 5-76
Talking on the phone 5-77
Phone settings 5-78
Voice command system 5-80
Using the voice command system 5-80
Voice command system operation 5-82
Command list 5-84
What to do if 5-88
Troubleshooting 5-88
Appendix 5-92
Certification 5-92
Certification for the Hands-free system 5-92
Certification for Mexico models 5-93

Antenna

■ Roof antenna (for Rod type)

⚠ CAUTION

- **Be sure to remove the antenna rod before entering garages, parking towers and other locations with low ceilings.**
- **Remove the antenna rod before washing your car at a car wash. If the antenna rod is left attached, it may scratch the roof.**
- **When reinstalling the removed antenna rod, be sure to fully tighten it.**

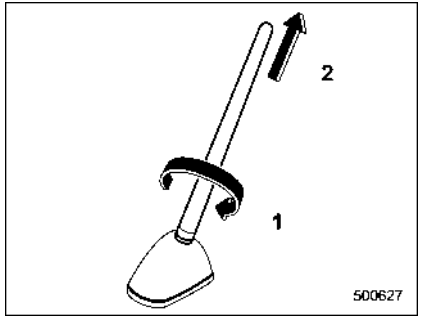

1) Unscrew
2) Remove

The roof antenna is installed in the center at the rear part of the roof.

The antenna rod can be removed by unscrewing it from its base.

■ Roof antenna (for Shark fin type)

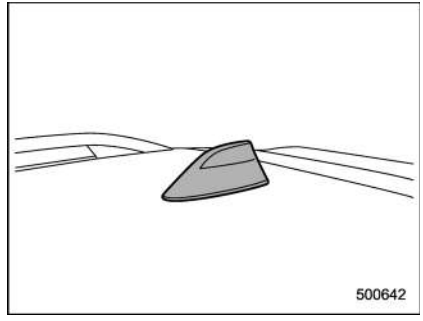

The radio antenna, satellite radio antenna and telematics antenna (if equipped) are installed in the center of the roof at the rear.

Audio set

Your vehicle may be equipped with one of the following audio sets. Refer to the pages indicated in this section for operating details.

CAUTION

- **Always consult your SUBARU dealer before installing a citizen band radio or other transmitting device in your vehicle. Such devices may cause the electronic control system to malfunction if they are incorrectly installed or if they are not suited for the vehicle.**
- **To prevent the battery from being discharged, do not leave the audio/visual system on when the engine is not running.**

NOTE

- **If a cell phone is placed near the audio set, it may cause the audio set to emit noise when the phone receives calls. This noise does not indicate an audio set malfunction. Note that a cell phone should not be placed near the audio set.**
- **Some functions may not be available depending on the market and specifications of your vehicle.**
- **The images shown in this Owner's Manual are sample images. The actual images may vary depending on the market and specifications of your vehicle.**

– CONTINUED –

■ Base display audio set (if equipped)

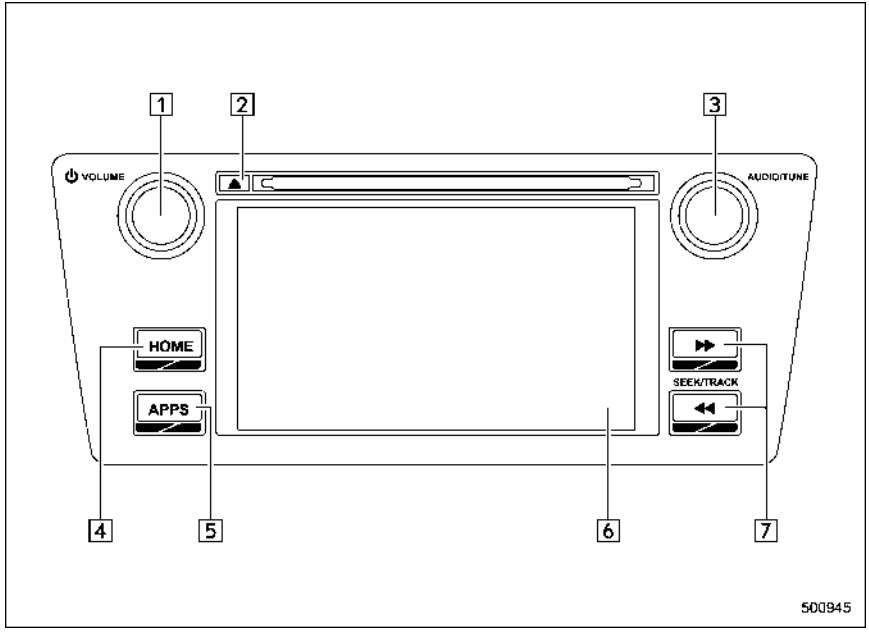

1) Power/VOLUME knob
2) Eject button
3) AUDIO/TUNE knob
4) HOME button
5) APPS button
6) Display
7) SEEK/TRACK buttons

The audio set will operate only when the ignition switch is in the “ACC” or “ON” position.

- Power and audio controls: refer to “Basic operation” ☞5-18.
- SUBARU STARLINK (if equipped): refer to “SUBARU STARLINK” ☞5-26.
- Radio operation: refer to “AM/FM radio” ☞5-28.
- Satellite radio operation (if equipped): refer to “SiriusXM Satellite Radio” ☞5-37.
- aha™: refer to “aha™ by HARMAN” ☞5-43.
- Pandora® (if equipped): refer to “Pandora®” ☞5-49.
- CD (compact disc) player operation: refer to “CD” ☞5-52.
- USB storage device: refer to “USB memory” ☞5-54.
- iPod operation: refer to “iPod” ☞5-55.
- Bluetooth® audio: refer to “Bluetooth audio” ☞5-57.
- Auxiliary input jack: refer to “AUX” ☞5-60.
- Hands-free phone system: refer to “Hands-free phone system” ☞5-70.

NOTE

HD Radio™ Technology (if equipped) should be included as a feature in the base display audio set.

This display audio set is referred to as follows.

- U.S. customers: SUBARU STARLINK™ 6.2 Multimedia
- Canadian customers: 6.2-inch infotainment system

– CONTINUED –

■ STARLINK™ 7.0 Multimedia Plus audio set (U.S. spec. models only, if equipped)

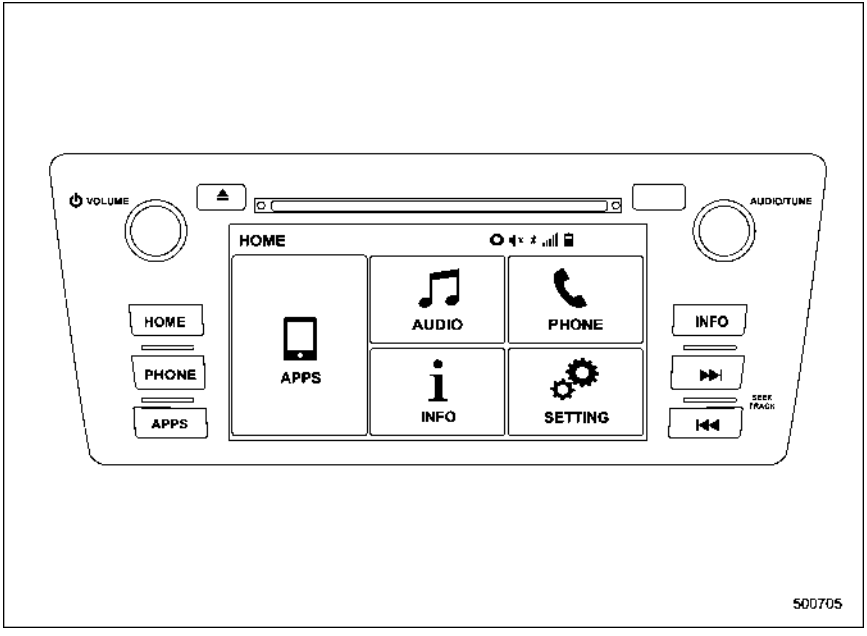

The audio set will operate only when the ignition switch is in the “ACC” or “ON” position.

For details about how to use the STARLINK™ 7.0 Multimedia Plus audio set, refer to the STARLINK™ 7.0 Multimedia Plus or STARLINK™ 7.0 Multimedia Navigation Owner’s Manual.

NOTE

HD Radio Technology should be included as a feature in the STARLINK™ 7.0 Multimedia Plus audio set.

■ Tips for operating the audio/visual system

⚠ CAUTION

To avoid damage to the audio/visual system:

- **Be careful not to spill beverages over the audio/visual system.**
- **Do not put anything other than an appropriate disc into the disc slot.**

NOTE

The use of a cell phone inside or near the vehicle may cause a noise from the speakers of the audio/visual system which you are listening to. However, this does not indicate a malfunction.

▼ Radio

Usually, a problem with radio reception does not mean there is a problem with the radio — it is just the normal result of conditions outside the vehicle.

For example, nearby buildings and terrain can interfere with FM reception. Power lines or phone wires can interfere with AM signals. And of course, radio signals have a limited range. The farther the vehicle is from a station, the weaker its signal will be. In addition, reception conditions change constantly as the vehicle moves.

Here, some common reception problems that probably do not indicate a problem with the radio are described.

▽ FM

Fading and drifting stations: Generally, the effective range of FM is about 25 miles (40 km). Once outside this range, you may notice fading and drifting, which increase with the distance from the radio transmitter. They are often accompanied by distortion.

Multi-path: FM signals are reflective, making it possible for 2 signals to reach the vehicle's antenna at the same time. If this happens, the signals will cancel each other out, causing a momentary flutter or loss of reception.

Static and fluttering: These occur when signals are blocked by buildings, trees or other large objects. Increasing the bass level may reduce static and fluttering.

Station swapping: If the FM signal being listened to is interrupted or weakened, and there is another strong station nearby on the FM band, the radio may tune in the second station until the original signal can be picked up again.

▽ AM

Fading: AM broadcasts are reflected by the upper atmosphere — especially at night. These reflected signals can interfere with those received directly from the radio station, causing the radio station to sound alternately strong and weak.

Station interference: When a reflected signal and a signal received directly from a radio station are very nearly the same frequency, they can interfere with each other, making it difficult to hear the broadcast.

Static: AM is easily affected by external sources of electrical noise, such as high tension power lines, lightening or electrical motors. This results in static.

▽ SiriusXM (if equipped)

- Cargo loaded on the roof luggage carrier, especially metal objects, may adversely affect the reception of SiriusXM Satellite Radio.
- Alternation or modifications carried out without appropriate authorization may invalidate the user's right to operate the equipment.

– CONTINUED –

▼ CD player and disc

- This CD player is intended for use with 4.7 in. (12 cm) discs only.
- Extremely high temperatures can keep the CD player from working. On hot days, use the air conditioning system to cool the inside of the vehicle before using the player.
- Bumpy roads or other vibrations may make the CD player skip.
- If moisture gets into the CD player, the discs may not be able to be played. Remove the discs from the player and wait until it dries.

⚠ WARNING

CD players use an invisible laser beam which could cause hazardous radiation exposure if directed outside the unit. Be sure to operate the player correctly.

Audio CDs	COMPACT disc DIGITAL AUDIO	COMPACT disc DIGITAL AUDIO TEXT
	COMPACT disc DIGITAL AUDIO Recordable	COMPACT disc DIGITAL AUDIO ReWritable

- Use only discs marked as shown above. The following products may not be playable on your player:
  - SACD
  - dts CD
  - Copy-protected CD
  - Video CD

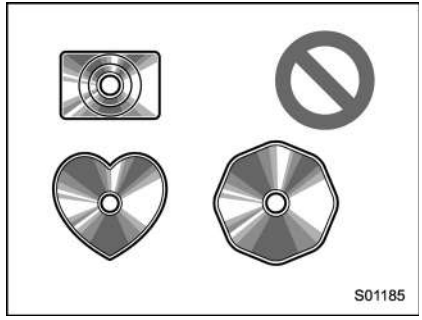

Special shaped discs

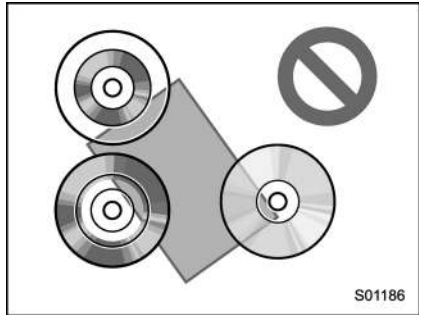

Transparent/translucent discs

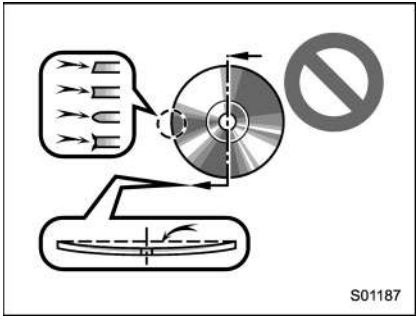

Low quality discs

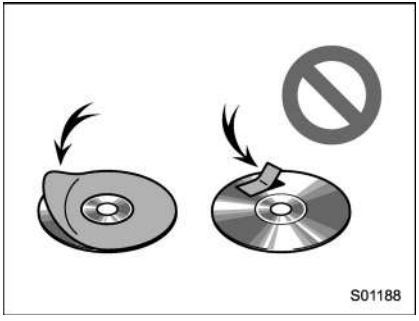

Labeled discs

CAUTION

- **Do not use special shaped, transparent/translucent, low quality or labeled discs such as those shown in the illustrations. The use of such discs may damage the player, or it may be impossible to eject the disc.**
- **This system is not designed for use of Dual Discs. Do not use Dual Discs because they may cause damage to the player.**
- **Do not use discs with a protection ring. The use of such discs may damage the player, or it may be impossible to eject the disc.**
- **Do not use printable discs. The use of such discs may damage the player, or it may be impossible to eject the disc.**

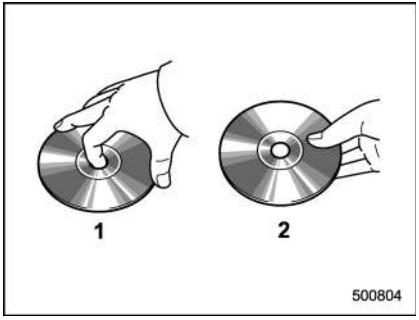

1) Correct
2) Wrong

- Handle discs carefully, especially when inserting them. Hold them on the edge and do not bend them. Avoid getting fingerprints on them, particularly on the shiny side.
- Dirt, scratches, warping, pin holes or other disc damage could cause the player to skip or to repeat a section of a track. (To see a pin hole, hold the disc up to the light.)
- Remove discs from the players when not in use. Store them in their plastic cases away from moisture, heat and direct sunlight.

– CONTINUED –

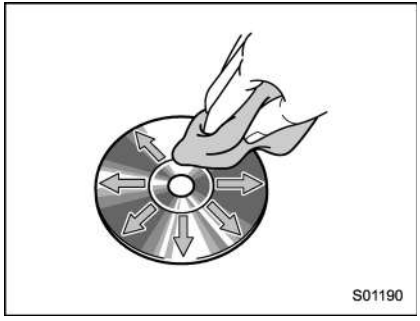

To clean a disc: Wipe it with a soft, lint-free cloth that has been dampened with water. Wipe in a straight line from the center to the edge of the disc (not in circles). Dry it with another soft, lint-free cloth. Do not use a conventional record cleaner or anti-static device.

▽ CD-R/RW discs

- CD-R/CD-RW discs that have not been subject to the “finalizing process” (a process that allows discs to be played on a conventional CD player) cannot be played.
- It may not be possible to play CD-R/CD-RW discs recorded on a music CD recorder or a personal computer because of disc characteristics, scratches or dirt on the disc, or dirt, condensation, etc. on the lens of the unit.
- It may not be possible to play discs recorded on a personal computer depending on the application settings and the environment. Record with the correct format. (For details, contact the appropriate application manufacturers of the applications.)
- CD-R/CD-RW discs may be damaged by direct exposure to sunlight, high temperatures or other storage conditions. The unit may be unable to play some damaged discs.
- If you insert a CD-RW disc into the player, playback will begin more slowly than with a conventional CD or CD-R disc.
- Recordings on CD-R/CD-RW cannot be played using the DDCD (Double Density CD) system.

▼ USB memory device

- USB communication formats: USB 1.1/2.0 HS (480 Mbps) and FS (12 Mbps)
- File formats: FAT 16/32
- Correspondence class: Mass storage class

▼ iPod

The following iPod, iPod nano, iPod classic, iPod touch and iPhone devices can be used with this system.

Made for

- iPod touch (5th generation)*
- iPod touch (4th generation)
- iPod touch (3rd generation)
- iPod touch (2nd generation)
- iPod touch (1st generation)
- iPod classic
- iPod nano (7th generation)*
- iPod nano (6th generation)*
- iPod nano (5th generation)
- iPod nano (4th generation)
- iPod nano (3rd generation)
- iPod nano (2nd generation)*
- iPod nano (1st generation)*
- iPhone 5s*
- iPhone 5c*
- iPhone 5*
- iPhone 4s
- iPhone 4
- iPhone 3GS
- iPhone 3G
- iPhone

*: iPod video not supported

Depending on differences between models or software versions etc., some models might be incompatible with this system.

▼ File information

Compatible compressed files (Audio)

Item	USB	DISC
Compatible file format	MP3/WMA/AAC	
Folders in the device	Maximum 512	Maximum 255
Files in the device	Maximum 8000	Maximum 512
Files per folder	Maximum 255	—

Corresponding sampling frequency (Audio)

File type	Frequency (kHz)
MP3 files: MPEG 1 LAYER 3	32/44.1/48
MP3 files: MPEG 2 LSF LAYER 3	16/22.05/24
WMA files: Ver. 7, 8, 9 (9.1/9.2)	32/48/64/80/96/128/160/192
AAC files: MPEG4/AAC-LC	48/44.1/32/24/22.05/16/12/11.025/8

Corresponding bit rates (Audio)

File type	Bit rate (kbps)
MP3 files: MPEG 1 LAYER 3	32 - 320
MP3 files: MPEG 2 LSF LAYER 3	8 - 160
WMA files: Ver. 7, 8	CBR 48 - 192
WMA files: Ver. 9 (9.1/9.2)	CBR 32 - 192
AAC files: MPEG4/AAC-LC	16 - 320

(Variable Bit Rate (VBR) compatible)

- MP3 (MPEG Audio Layer 3), WMA (Windows Media Audio) and AAC (Advanced Audio Coding) are audio compression standards.
- This system can play MP3/WMA/AAC files on CD-R, CD-RW discs, USB memory, and Bluetooth device.
- This system can play disc recordings compatible with ISO 9660 level 1 and level 2 and with the Romeo and Joliet file system.
- When naming an MP3/WMA/AAC file, add an appropriate file extension (.mp3/.wma/.m4a).
- This system plays back files with .mp3/.wma/.m4a file extensions as MP3/WMA/AAC files respectively. To prevent noise and playback errors, use the appropriate file extension.
- This system can play only the first session when using multi-session compatible CDs.
- MP3 files are compatible with the ID3 Tag Ver. 1.0, Ver. 1.1, Ver. 2.2 and Ver. 2.3 formats. This system cannot display disc title, track title and artist name in other formats.
- WMA/AAC files can contain a WMA/AAC tag that is used in the same way as an ID3 tag. WMA/AAC tags carry information such as track title and artist name.
- The emphasis function is available only when playing MP3/WMA files recorded at 32, 44.1 and 48 kHz.
- This system can play back AAC files encoded by iTunes.
- The sound quality of MP3/WMA files generally improves with higher bit rates. In order to achieve a reasonable level of sound quality, discs recorded with a bit rate of at least 128 kbps are recommended.
- The MP3/WMA player does not play back MP3/WMA files from discs recorded using packet write data transfer (UDF format). Discs should be recorded using “pre-mastering” software rather than packetwrite software.

– CONTINUED –

- M3u playlists are not compatible with the audio device.
- MP3i (MP3 interactive) and MP3PRO formats are not compatible with the audio device.
- The player is compatible with VBR (Variable Bit Rate).
- When playing back files recorded as VBR (Variable Bit Rate) files, the play time will not be correctly displayed if the fast forward or reverse operations are used.
- It is not possible to check folders that do not include MP3/WMA/AAC files.
- MP3/WMA/AAC files in folders up to 8 levels deep can be played. However, the start of playback may be delayed when using discs containing numerous levels of folders. For this reason, we recommend creating discs with no more than 2 levels of folders.

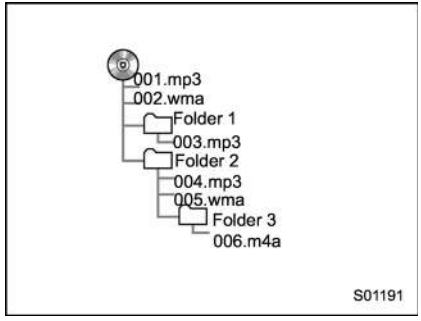

- The play order of the compact disc with the structure shown above is as follows:

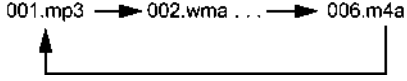

- The order changes depending on the personal computer and MP3/WMA/AAC encoding software you use.

▼ **Terms**

▽ **Packet write**

- This is a general term that describes the process of writing data on-demand to CD-R, etc., in the same way that data is written to floppy or hard discs.

▽ **ID3 tag**

- This is a method of embedding track-related information in an MP3 file. This embedded information can include the track number, track title, the artist's name, the album title, the music genre, the year of production, comments, cover art and other data. The contents can be freely edited using software with ID3 tag editing functions. Although the tags are restricted to a number of characters, the information can be viewed when the track is played back.

▽ **WMA tag**

- WMA files can contain a WMA tag that is used in the same way as an ID3 tag. WMA tags carry information such as track title and artist name.

▽ **ISO 9660 format**

- This is the international standard for the formatting of CD-ROM folders and files. For the ISO 9660 format, there are 2 levels of regulations.
- Level 1: The file name is in 8.3 format (8 character file names, with a 3 character file extension. File names must be composed of one-byte capital letters and numbers. The "_" symbol may also be included.)

- Level 2: The file name can have up to 31 characters (including the separation mark "." and file extension). Each folder must contain fewer than 8 hierarchies.

▽ **MP3**

- MP3 is an audio compression standard determined by a working group (MPEG) of the ISO (International Standard Organization). MP3 compresses audio data to about 1/10 the size of that on conventional discs.

▽ **WMA**

- WMA (Windows Media Audio) is an audio compression format developed by Microsoft®. It compresses files into a size smaller than that of MP3 files. The decoding formats for WMA files are Ver. 7, 8 and 9.
- This product is protected by certain intellectual property rights of Microsoft Corporation and third parties. Use or distribution of such technology outside of this product is prohibited without a license from Microsoft or an authorized Microsoft subsidiary and third parties.

▽ **AAC**

- AAC is short for Advanced Audio Coding and refers to an audio compression technology standard used with MPEG2 and MPEG4.

– CONTINUED –

▼ Error messages

Mode	Message	Explanation
CD	“Disc read error.”	● This indicates that no MP3/WMA/AAC files are included in the disc. ● This indicates that the disc is dirty, damaged, or it was inserted upside down. Clean the disc or insert it correctly. It indicates a disc which is not playable is inserted.
	“Please eject disc.”	There is a trouble inside the system. Eject the disc.
USB	“Media not connected. Press AUDIO/TUNE knob to exit.”	This indicates a problem in the USB memory or its connection. Refer to “Connecting and disconnecting a USB memory/portable device” ☞5-17.
	“No audio file.”	This indicates that no MP3/WMA/AAC files are included in the USB memory.
	“Unplayable file”	This indicates that the accessed file cannot play back.
iPod	“Media not connected”	This indicates that a USB device/iPod is not connected to the system.
	“No audio file”	This indicates that there is no audio file in the connected iPod.
	“Unplayable file”	This indicates that the accessed file cannot play back.

NOTE

If the malfunction is not rectified: Take your vehicle to your SUBARU dealer.

■ Basic information before use

⚠ WARNING

When the vehicle is stopped with the engine running, always apply the parking brake for safety. Failure to do so may result in loss of control of your vehicle and cause an accident or serious injury.

⚠ CAUTION

- **To prevent damaging the screen, touch the screen keys with your finger lightly.**
- **Wipe off fingerprints using a glass cleaning cloth. Do not use chemical cleaners to clean the screen, as they may damage the touch screen.**

▼ Touch screen gestures

Operations are performed by touching the touch screen directly with your finger.

Operation method	Outline	Main use
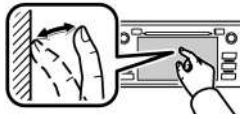	**Touch** Quickly touch and release once.	Changing and selecting various settings
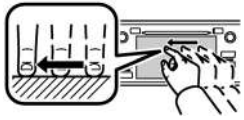	**Drag*** Touch the screen with your finger, and move the screen to the desired position.	Scrolling the lists
	Flick* Quickly move the screen by flicking with your finger.	Scrolling the main screen page

*: The above operations may not be performed on all screens.

NOTE

There may be a delayed response to flick operation that are performed at high altitudes.

– CONTINUED –

▼ Touch screen operation

This system is operated mainly by the keys on the screen.

When a screen key is touched, a beep sounds. You can set the beep sound. Refer to “Unit settings” ☞5-19.

NOTE

- **If the system does not respond to touching a screen key, move your finger away from the screen and touch it again.**
- **Grayed-out screen keys cannot be operated.**
- **The displayed image may become darker and moving images may be slightly distorted when the screen is cold.**
- **In extremely cold conditions, the screen may not be displayed correctly. Also, the screen keys may be less responsive than usual when pressed.**
- **When you look at the screen through polarized material such as polarized sunglasses, the screen may be dark and difficult to see. If so, look at the screen from different angles, adjust the screen settings or take off your sunglasses. Refer to “Unit settings” ☞5-19.**

▼ Entering letters and numbers/list screen operation

▽ Entering letters and numbers

When entering the Bluetooth device name or PIN-code, or the phone number, letters and numbers can be entered via the screen.

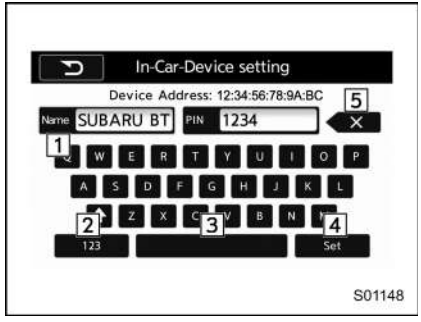

Enter letters (example: In-Car-Device setting)

No.	Function
1	Enter the desired characters (alphabet key mode).
2	Switch to the screen for characters.
3	Enter a space.
4	Confirm the characters/numbers entered into the window.
5	Delete a character/number entered into the window.

▽ List screen

Multimedia playlists (example: iPod playlist)

No.	Function
1	Select a category that wants to play back.
2	Return to the playback display of each mode.
3	Select to skip to the next or previous page.

▼ Initial screen

When the ignition switch is in the “ACC” or “ON” position, the initial screen will be displayed and the system will begin operating.

500984

- When using the SUBARU STARLINK function (if equipped), the display screen may be different from the screen above.
- After a few seconds, the caution screen will be displayed.
- After about 5 seconds, the caution screen automatically switches to the next screen.

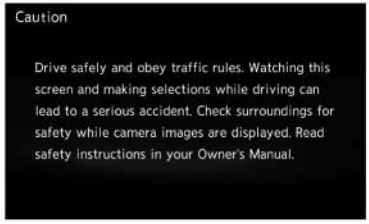

S01277

▼ Connecting and disconnecting a USB memory/portable device

The USB port and the AUX jack are located as shown in the following illustration.

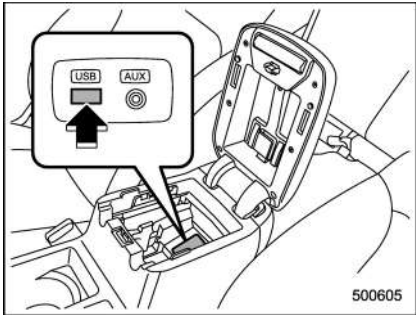

500605

NOTE

- **This unit does not support commercially available USB hubs.**
- **Turn on the power of the device when it is not turned on.**
- **This device has a USB port for USB memory/portable device.**
- **For compatible USB memory devices, refer to “USB memory device” ☞5-10.**
- **For compatible iPod models, refer to “iPod” ☞5-10.**
- **Even if a USB hub is used to connect more than two USB devices,**

– CONTINUED –

only the first two connected devices will be recognized.

■ Basic operation

This section describes some of the basic features of the audio/visual system. Some information may not pertain to your system.

Your audio/visual system works when the ignition switch is turned to the “ACC” or “ON” position.

⚠ CAUTION

To prevent the battery from being discharged, do not leave the audio/visual system on longer than necessary when the engine is not running.

NOTE

Some functions can also be operated by using the voice command system. For details, refer to “Voice command system” ☞5-80.

▼ Turning the system on and off

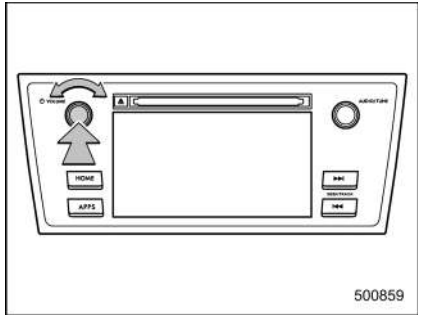

Press the power/VOLUME knob to turn the audio/visual system on and off. When the system turns on, the mode that was in use the last time the system was turned off will be displayed. Press and hold the knob to turn the display off.

Turn this knob to adjust the volume.

▼ Selecting an audio source

1. Press the AUDIO/TUNE knob.

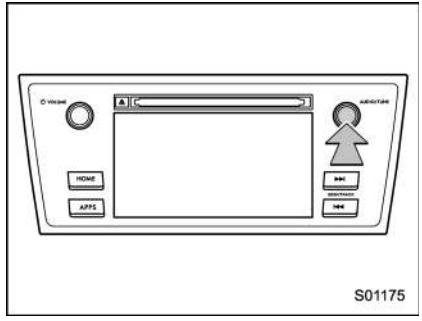

2. Select the desired source.

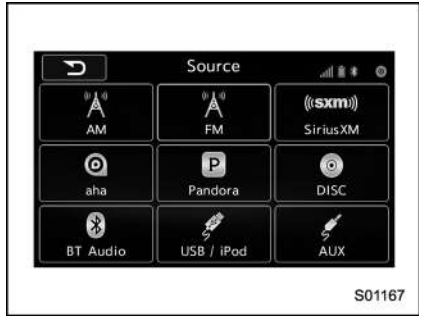

Example: Source select screen

NOTE

- **If the audio control screen appears, select the "Source" key on the audio screen or press the AUDIO/TUNE knob again.**
- **When you push the AUDIO/TUNE knob while any screen other than the audio control screen is displayed, the display will return to the audio control screen.**
- **When the AUDIO/TUNE knob is pushed and held, the graphic equalizer screen will be displayed. Refer to ""Graphic Equalizer"" ☞5-23.**

▼ Selecting a function menu

Press the HOME button to display home screen.

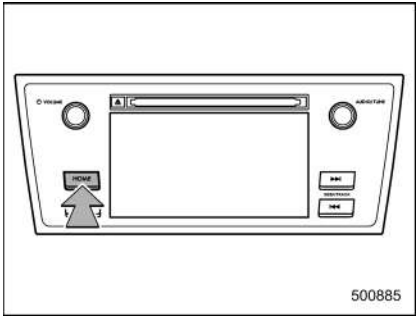

Item	Function
AUDIO	Select to display the main screen of the audio source that was selected previously.
PHONE	Select to display the hands-free function using your cell phone. Refer to "Hands-free phone system" ☞5-70.
APPS	Select to display the functions linked with a smartphone. Refer to "SUBARU STARLINK" ☞5-26.
SETTINGS	Select to display the functions for performing various settings. Refer to "Unit settings" ☞5-19.

■ Unit settings

Sound quality adjustment, screen adjustment, and information of the audio unit are displayed.

1. Press the HOME button on the audio panel.
2. Touch the "SETTINGS" key.
3. Select the items to be set.

Available setting:

- General settings: Select the tab to check the system software update information. Refer to "General settings" ☞5-20.
- Bluetooth settings: Select the tab to set the Bluetooth settings. Refer to "Bluetooth settings" ☞5-20.
- Sound settings: Select the tab to set the sound quality settings. Refer to "Sound settings" ☞5-20.
- Display settings: Select the tab to set the screen settings. Refer to "Display settings" ☞5-25.
- SUBARU STARLINK settings (if equipped): Select to the tab set the SUBARU STARLINK settings. Refer to "SUBARU STARLINK settings" ☞5-26.

– CONTINUED –

▼ General settings

Touch the ⚙ tab for the audio unit basic settings.

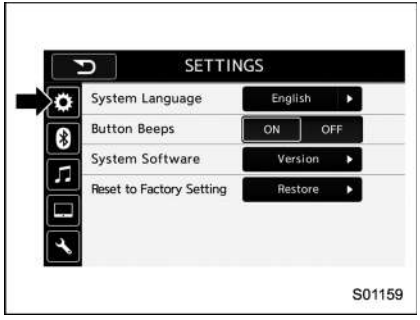

Item	Function
System Language	Select to change the language.
Button Beeps	Select to set the sound beeps on/off.
System Software	Select to update software versions. This menu is not used in usual operation.
Reset to Factory Setting	Select to reset the device to factory settings. This menu is not used in usual operation. After resetting to factory settings, turn ignition off and on again.

▼ Bluetooth settings

Touch the ᛒ tab to set Bluetooth.

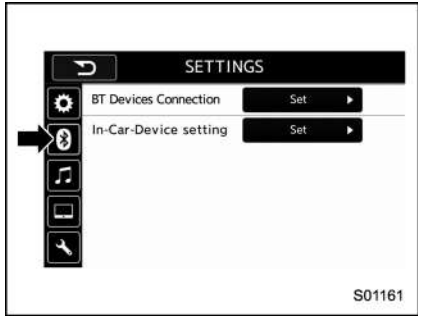

Item	Function
BT Devices Connection	Select to pair/connect the Bluetooth devices.
In-Car-Device setting	Select to enter the Bluetooth device name or PIN-code.

For details, refer to “Bluetooth® settings” ☞5-65.

▼ Sound settings

Touch the ♫ tab to set the sound quality.

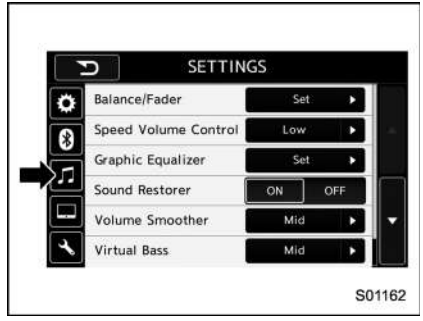

Item	Function
Balance/Fader	Select to adjust speaker volume balance (right/left and front/rear).
Speed Volume Control	Select to adjust speaker volume coupled to vehicle speed.
Graphic Equalizer	Select to adjust sound quality in each frequency band.
Sound Restorer	Select to add high-pitched tone to the compressed audio file.
Volume Smoother	Select to adjust volume difference between audio sources.
Virtual Bass	Select to add harmonic tone so that low-pitched tone is strengthened.

Item	Function
Vocal Image Control	Select to pick-up vocal sound signal from the sound data, and adjust it to right/left or front/rear.

Refer to the following table for the adjustment range of each audio setting item and default value.

Item			Step	Default
Balance/Fader	Volume Balance Control	Balance	L9-R9	0 (Center)
		Fader	F9-R9	0 (Center)
	Vocal Image Control	Balance	L9-R9	R3
		Fader	F9-R9	0 (Center)
Speed Volume Control			OFF, Low, High	Low
Graphic Equalizer			−6-+6	0 (Flat)
Sound Restorer			ON, OFF	ON
Volume Smoother			OFF, Low, Mid, High	Mid
Virtual Bass			OFF, Low, Mid, High	Mid

– CONTINUED –

▽ **“Balance/Fader”**

A good balance of the left and right stereo channels and of the front and rear sound levels is important for good quality audio program listening.

Keep in mind that when listening to a stereo recording or broadcast, changing the right/left balance will increase the volume of 1 group of sounds while decreasing the volume of another.

Touch the “Set” key of the “Balance/Fader” key. The “Balance/Fader” screen will appear.

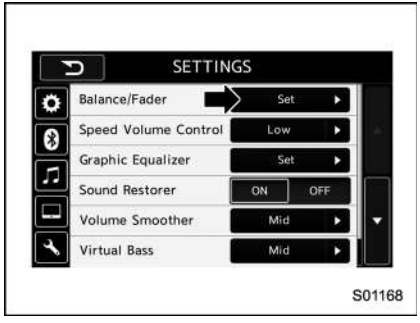

- Volume Balance setting

1. Select the “Volume Balance Control” key.

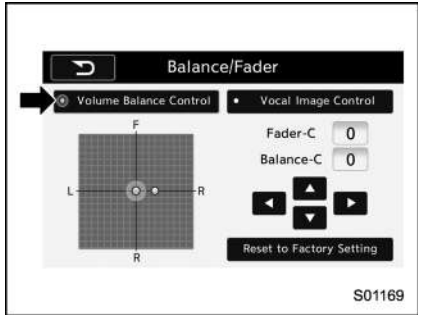

2. Adjust the balance by pressing “◀” or “▶” key.
3. Adjust the fader by pressing “▲” or “▼” key.

- Vocal image setting

1. Select the “Vocal Image Control” key.

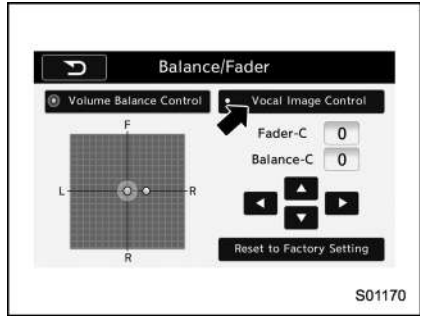

2. Adjust the balance by pressing “◀” or “▶” key.
3. Adjust the fader by pressing “▲” or “▼” key.

▽ "Speed Volume Control"

The system adjusts to the optimum volume and tone quality according to vehicle speed to compensate for increased vehicle noise.

1. Touch the right side key of the "Speed Volume Control" key.
2. Select the desired item. The "High" key comes to have a bigger effect. When the "OFF" key is selected, speed volume control function is canceled.

S01171

▽ "Graphic Equalizer"

You can adjust the sound quality by increasing/decreasing the gain for each frequency range.

1. Touch the "Set" key of the "Graphic Equalizer" key.

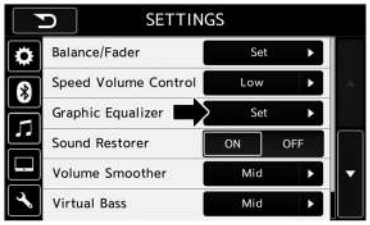

500845

2. In this mode, 6 preset equalizer patterns (the "Bass", "Treble", "Acoustic", "Impact", "Smooth" and "Flat" key) and 3 customized patterns (the "SET 1" - "SET 3" key) are available.
3. When customizing the equalizer pattern, touch among "SET 1", "SET 2" or "SET 3" and then touch the "Adjust" key.

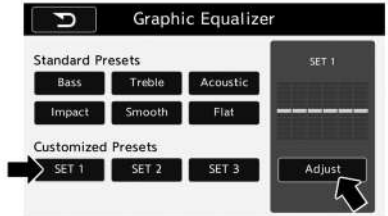

S01173

4. Adjust the level of each frequency band by touching " ▲ " or " ▼ " key.

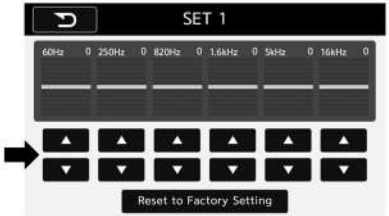

S01176

– CONTINUED –

▽ **“Sound Restorer”**

You can play compressed audio data with a sound quality that is close to the original sound.

Select the “ON” or “OFF” key by the right side key of the “Sound Restorer” key.

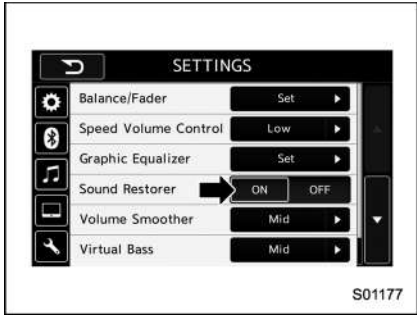

▽ **“Volume Smoother”**

This function reduces the difference in volume among the sound sources to be played.

1. Touch the right side key of the “Volume Smoother” key.
2. Select the “OFF”, “Low”, “Mid” or “High” key. The “High” key comes to have a bigger effect. When the “OFF” key is selected, the volume smoother function is canceled.

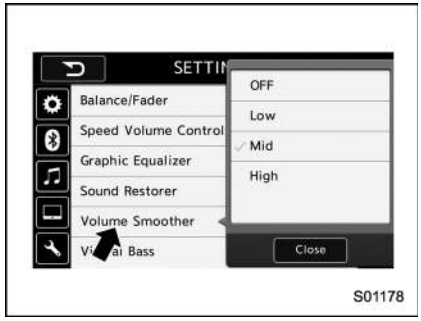

▽ **“Virtual Bass”**

This function enables you to adjust the bass tone.

1. Touch the right side key of the “Virtual Bass” key.
2. Select the “OFF”, “Low”, “Mid” or “High” key. The “High” key comes to have a bigger effect. When the “OFF” key is selected, the virtual bass function is canceled.

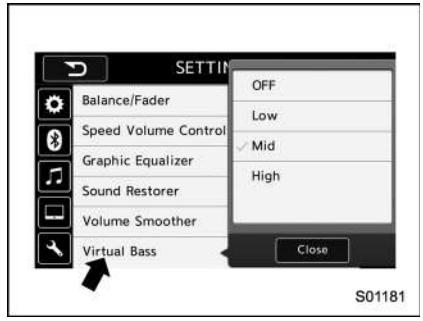

▽ **“Vocal Image Control”**

Refer to ““Balance/Fader”” ☞5-22.

▼ Display settings

Touch the ▭ tab to set display.

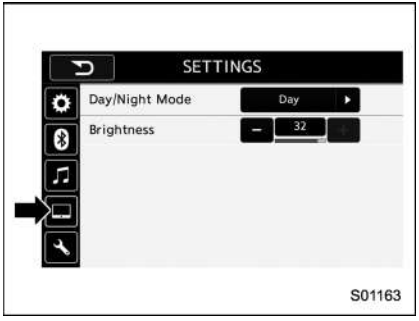

Item	Function
Day/Night Mode	The “Auto”, “Day” or “Night” key can be selected on the pop-up screen. When the “Auto” key is selected, the screen changes to day or night mode depending on the position of the headlight switch.
Brightness	Touch “+” or “−” to adjust the brightness.

NOTE

- **When the screen is viewed through polarized sunglasses, a rainbow pattern may appear on the screen due to optical characteristics of the screen. If this is disruptive, please operate the screen without polarized sunglasses.**
- **If the screen is set to “Day” mode with the headlight switch turned on, this condition is memorized even with the engine turned off.**

▽ How to adjust the rear view image

In the camera display, the brightness, tint, color and black level of the screen can be adjusted.

1. Depress the brake pedal fully and stop the vehicle.
2. While the vehicle is stopped, set the shift lever (MT models) or select lever (CVT models) in the “R” position, and then touch the display.
3. Touch the “Display Adjustment” key.
4. Touch the items to adjust the rear camera screen.

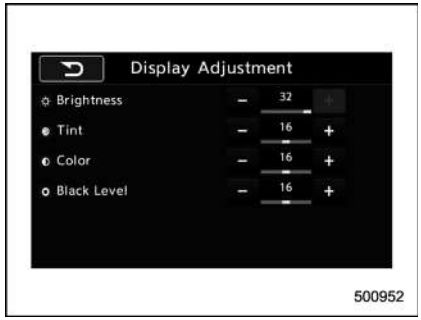

Camera display

⚠ WARNING

When adjusting camera display screen, make sure to depress the brake pedal fully to avoid the vehicle from moving. Failure to do so may lead to a serious accident.

NOTE

The camera display can be accessed when the rear camera monitor is displayed.

– CONTINUED –

▼ SUBARU STARLINK settings (if equipped)

Touch the 🔧 tab to change the SUBARU STARLINK settings.

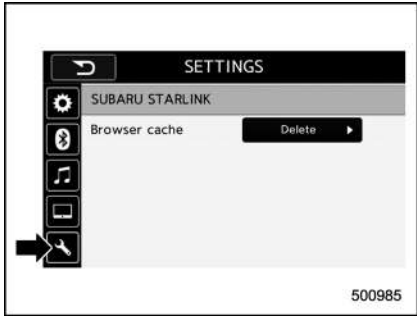

Item	Function
Browser cache	Select to initialize cache files that the browser stores. If the confirmation screen appears and the “OK” key is selected, the cache files will be deleted.

■ SUBARU STARLINK (if equipped)

The SUBARU STARLINK function allows the system to link with a smartphone using Bluetooth.

▼ How to use SUBARU STARLINK

1. Connect to the audio system. Use a USB port for an iPhone or iPod touch and Bluetooth for Android devices.
   - For details about connecting an iPhone/iPod touch: Refer to “Connecting and disconnecting a USB memory/portable device” ☞5-17.
   - For details about registering or connecting an Android device: Refer to “Registering/connecting Bluetooth® device” ☞5-65.
2. Press the HOME button, and then touch the “APPS” key, or press the APPS button on the audio panel. The APPS screen is displayed.

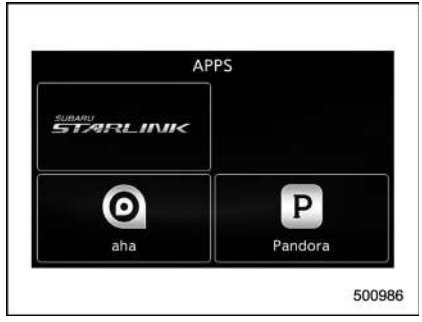

3. Touch the “SUBARU STARLINK” key on the APPS screen. The disclaimer screen or the error screen is displayed.
4. Touch the “Check” key on the disclaimer screen and then the APPS main screen will appear. If you touch the “Cancel” key, the disclaimer screen disappears and the previous screen will be displayed again.

NOTE

- **The SUBARU STARLINK connection error screen will be displayed due to one of the following possible reasons.**
  - **Your smartphone and the system has not been connected via USB (for iPhone) or Bluetooth (for Android).**
  - **SUBARU STARLINK APPS has**

not been activated.

- You can also switch to aha or Pandora (if equipped) from the APPS screen.

▼ APPS main screen

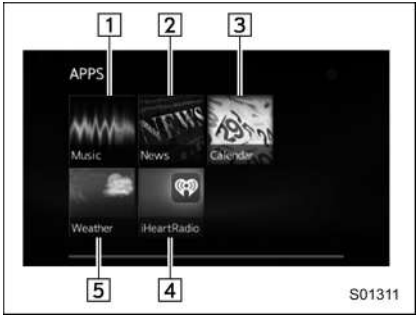

No.	Function
1	Select to go to the Music APPS screen.
2	Select to go to the News APPS screen.
3	Select to go to the Calender APPS screen.
4	Select to go to the iHeartRadio APPS screen.
5	Select to go to the Weather APPS screen.

NOTE

- The error screen will be displayed while using SUBARU STARLINK due to one of the following possible reasons.
  - When your smartphone has no service or the Bluetooth communication is not possible.
  - When your smartphone is turned off.
  - When the SUBARU STARLINK APPS is quit.
  - When connection to the SUBARU STARLINK server is not possible.
  - When a problem occurs other than a server error.
- When using the SUBARU STARLINK function, a disclaimer screen will be displayed. Be sure to fully read the contents before using the function.
- Supported devices
  - iPhone: iPhone 4/iPhone 4s/iPhone 5 (iOS Ver. 5.1 or later)/iPhone 5c/iPhone 5s
  - Android: (OS Ver. 4.0 or later)

– CONTINUED –

■ AM/FM radio

▼ Control screen and audio panel

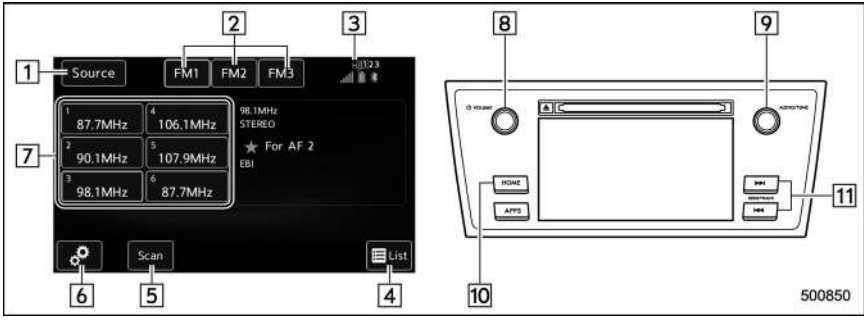

No.	Function
1	Select to display the audio source selection screen.
2	Select to change the band.
3	The HD Radio indicator on the top right of the screen changes according to the reception condition of HD Radio (if equipped).
4	Select to display a station list (if equipped). Refer to “Selecting a station from the list” ☞5-29.

No.	Function
5	Select to scan radio channels. This function enables searching for receivable stations automatically, and tunes in to a frequency for 5 seconds if a station is found. When the 5-second period has elapsed, the system searches for the next receivable station again, and tunes in to the frequency for 5 seconds.
6	Select to open the “Option” screen. Refer to “Radio settings” ☞5-30.
7	When you touch a key, the system tunes to the stored frequency. When you touch and hold a key, the system stores the frequency to the selected preset channel. Refer to “Presetting a station” ☞5-29.

No.	Function
8	Turn to adjust volume. Press to turn the audio system on/off.
9	Turn to step up/down frequencies. Turn to move up/down the list. Also, the knob can be used to enter selections on the list screens by pressing. Press to select an audio mode. For details, refer to “Selecting an audio source” ☞5-18.
10	Press to display the sound setting screen. Refer to “Unit settings” ☞5-19.
11	Press to seek for a station/channel. Press and hold for continuous seek.

NOTE

- **Although FM is normally static free, reception can be affected by the surrounding area, atmospheric conditions, station strength and transmitter distance. Buildings or other obstructions may cause momentary static, flutter or station interference. If reception continues to be unsatisfactory, switch to a stronger station.**
- **The radio automatically changes to stereo reception when a stereo broadcast is received.**

- **The radio automatically blends to an HD Radio signal (if equipped) in AM or FM where available.**

▼ How to change the source

Select the “AM” or “FM” key on the source select screen. Refer to “Selecting an audio source” ☞5-18.

▼ Presetting a station

In total 18 stations can be set for the FM band (6 each for FM1, FM2 and FM3) and 12 stations can be set for the AM band (6 each for AM1 and AM2).

1. Tune in the desired station.
2. If you touch and hold a key, the system stores the frequency to the selected preset channel.

S01280

▼ Selecting a station from the list (if equipped)

A station list can be displayed.

1. Touch the List tab.

S01281

2. Touch the ★ tab and the station list will appear.
3. Select the desired station.

▽ Update the station list

Touch the “Update Station List” key on the station list screen and the following screen will be displayed.

S01282

Item	Function
OK	Select to execute the manual update.
Cancel	Select to cancel the manual update.

NOTE

- **The audio system sound is muted during refresh operation.**
- **In some situations, it may take some time to update the station list.**

▽ Bookmark the list

You can store and call up the received data (images, song titles, artist names, etc.). The stored data is displayed as a list.

1. Touch the tab on the station list screen and the following screen will be

– CONTINUED –

displayed.

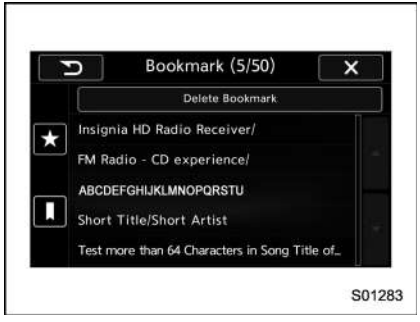

2. Select an item from the bookmark list, the following image will be displayed.

3. When you call up bookmark information, a QR code converted from the bookmark information will be displayed on the screen. You can access a URL by reading the QR code using a smartphone, etc.

▽ Delete bookmark from the list

1. Touch the “Delete Bookmark” key on the station list screen and the following screen will be displayed.

2. If you select an item from the bookmark list, the item will be deleted from the bookmark list.
3. Touch the “Delete All” key. If the confirmation screen appears and the “OK” key is selected, all bookmark items in the list will be deleted.

▼ Radio settings

You can perform various radio settings.

1. Touch the ⚙ tab.
2. Select the desired item from the following table.

Item	Function
HD (if equipped)	Select to turn HD radio on/off.
PTY Select (if equipped)	Select to set the PTY group.
Auto Store	Select to detect 6 radio stations with strong frequencies automatically and to store them in the order of frequency.

▼ About HD Radio™ technology (if equipped)

HD Radio™ Technology is the digital evolution of analog AM/FM radio. Your radio product has a special receiver which allows it to receive digital broadcasts (where available) in addition to the analog broadcasts it already receives. Digital broadcasts have better sound quality than analog broadcasts as digital broadcasts provide free, crystal clear audio with no static or distortion. For more information, and a guide to available radio stations and programming, refer to www.hdradio.com.

Digital Sound

AM and FM broadcast sound quality is now crystal clear, with AM sound quality that virtually matches FM quality of the past, and FM broadcasts that have near CD-level sound quality.

HD Radio Technology manufactured under license from iBiquity Digital Corporation. Foreign Patents. HD Radio™ and the HD, HD Radio, and "Arc" logos are proprietary trademarks of iBiquity Digital Corp.

HD2/HD3

FM stations can provide additional digital-only audio programming on HD2/HD3 Channels.

▼ **Available HD Radio™ technology (if equipped)**

▽ **Multicast**

On the FM radio frequency most digital stations have "multiple" or supplemental programs on one FM station.

1. Touch the "Sub CH" key on the control screen and the following screen will be displayed.

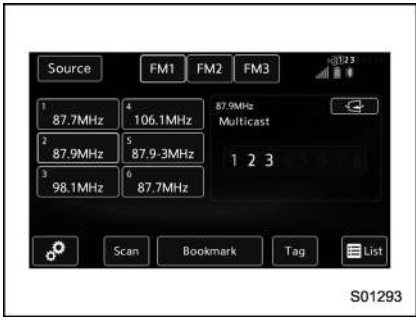

2. The indication that shows whether the current broadcast is digital or analog is displayed on the top right of the control screen.

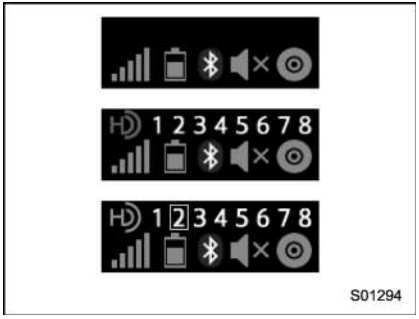

3. Select the desired channel.

Turning the AUDIO/TUNE knob can also

– CONTINUED –

select the desired multicast channel.

NOTE

- **HD Radio™ stations can be preset.**
- **An orange HD will be displayed on the screen when in digital. The HD will first appear in a gray color indicating the station is indeed (an analog and) a digital station. Once the digital signal is acquired, the logo will change to a bright orange color.**
- **The song title and artist name will appear on the screen when available by the radio station. The radio station can send album pictures when available.**
- **As a user works through the analog radio stations, (where applicable) the radio receiver will automatically tune from an analog signal to a digital signal within 5 seconds.**

▽ Preserving a music information

Tag information in the music broadcasting is preserved in the system and transmits to an iPod.

S01293

1. Touch the “Tag” key in the control screen while receiving HD Radio, the tag setting screen will be displayed.

S01295

2. Connect an iPod. Refer to “Connecting and disconnecting a USB memory/portable device” ☞5-17.

- Turn on the power of the iPod if it is not turned on.
- Once an iPod is connected, the music tag moves from the radio into the iPod.
- When the iPod is connected to iTunes, the tagged information of the songs which were tagged while listening to the radio can be viewed. Then a user may decide to purchase the song or CD/Album which had been listened to on their radio.

In addition, the following messages appear.

Display Message	Contents
“Tag storage full”	If there is not enough memory in the digital audio
“Already Stored”	If the same information is stored in the digital audio
“Storing Failed”	If the store process in the digital audio failed
“iPod full Tags cannot be stored”	If there is not enough memory in the iPod
“Starting to transfer the Tag files.”	If the system starts to transmit music information to an iPod
“Transferring Failed”	If the transmitting process of music information to an iPod failed
“X Tag(s) Sent” (X = number of transmitted information) will be displayed.	If the transmitting process of music information to an iPod is successful

NOTE

- **The tag information can not be preserved while scanning or caching the radio station.**
- **If tagging the music information fails, “Saving the HD Radio tag was unsuccessful. (Saving the HD Radio tag was unsuccessful.)” will be displayed on the screen. If this occurs, tag the information again.**

- Program Service Data: Presents song name, artist, station IDs, and other relevant data streams.

- iTunes Tagging provides you the opportunity to discover a wide range of content and the means to “tag” that content for later review and purchase from the iTunes Store. Also refer to the Apple Automotive specifications for implementing iTunes Tagging.

– CONTINUED –

Artist Experience

- Visual information related to content being played on your HD Radio receiver, such as Album Art, historical photographs, still art from live broadcasts, among other related content.

▽ Troubleshooting guide

Experience	Cause	Action
Mismatch of time alignment - a user may hear a short period of programming replayed or an echo, stutter or skip.	The radio stations analog and digital volume is not properly aligned or the station is in ballgame mode.	None, radio broadcast issue. A user can contact the radio station.
Sound fades, blending in and out.	Radio is shifting between analog and digital audio.	Reception issue. May clear-up as the vehicle continues to be driven. Turning the indicator of the HD Radio™ off will change the radio mode to analog audio.
Audio mute condition when an HD2/HD3 multicast channel had been playing.	The radio does not have access to digital signals at the moment.	This is normal behavior, wait until the digital signal returns. If out of the coverage area, seek a new station.
Audio mute delay when selecting an HD2/ HD3 multicast channel preset.	The digital multicast content is not available until HD Radio™ broadcast can be decoded and make the audio available. This takes up to 7 seconds.	This is normal behavior, wait for the audio to become available.
Text information does not match the present song audio.	Data service issue by the radio broadcaster.	Broadcaster should be notified. Complete the form; www.ibiquity.com/automotive/report_radio _station_experiences.
No text information shown for the present selected frequency.	Data service issue by the radio broadcaster.	Broadcaster should be notified. Complete the form; www.ibiquity.com/automotive/report_radio _station_experiences.
The “Acquiring” caution message appears when the system attempts to acquire digital transmission.	When acquiring digital data while receiving a digital broadcast and SPS station.	• When the reception in digital of the SPS station is confirmed. • When the system determined that the SPS station could not be received. • When the SPS broadcast is ended (stopped) by the radio station while receiving SPS.

– CONTINUED –

Experience	Cause	Action
The “HD Channel is unavailable” caution message appears when digital reception is not possible.	● When the system determined that the SPS station could not be received while receiving a digital broadcast and SPS station. ● When the SPS broadcast is ended (stopped) by the radio station while receiving SPS.	● When the status is changed to acquiring digital data because the reception condition of SPS station has improved. ● When the received station is changed.

■ SiriusXM Satellite Radio (if equipped)

▼ SiriusXM Data Service

Data service information, which is comprised of traffic information and weather information, can be received via the SiriusXM Radio.

To receive the data service information in the vehicle, a subscription to the SiriusXM Satellite Radio service is necessary.

Content set to use the SiriusXM data service is reset when personal information is initialized.

▼ Control screen and audio panel

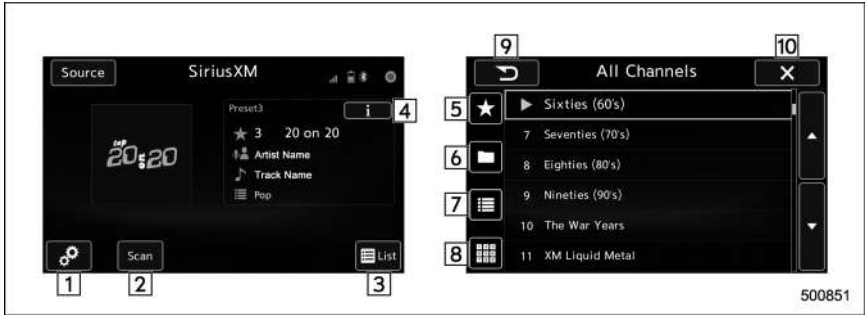

Control screen

No.	Function
1	Perform the SXM setting. See below. Refer to “SXM setting” ☞5-42.
2	Search for a channel which the direction of higher frequency from current frequency. Reproduce the channel that can receive by 5 seconds.
3	A list is displayed. There are three types of lists (“Presets”, “Categories” or “All Channels”) available. ● “Presets”: Preset channels are displayed in a list. ● “Categories”: The channels of the selected category are displayed in a list. ● “All Channels”: All selectable channels are displayed in a list.

– CONTINUED –

No.	Function
4	Display the contents information of a channel receiving.
5	Presets list (30 channels max.) is displayed. Refer to “Presetting a channel” ☞5-40.
6	Categories list is displayed. Refer to “Selecting a channel from the list” ☞5-41.
7	All channels list is displayed. The available received channels are displayed, and you can select a channel.
8	Change to the Direct Tune display. Refer to “Direct Tune” ☞5-42.
9	Return to the previous display.
10	Return to the playback display.

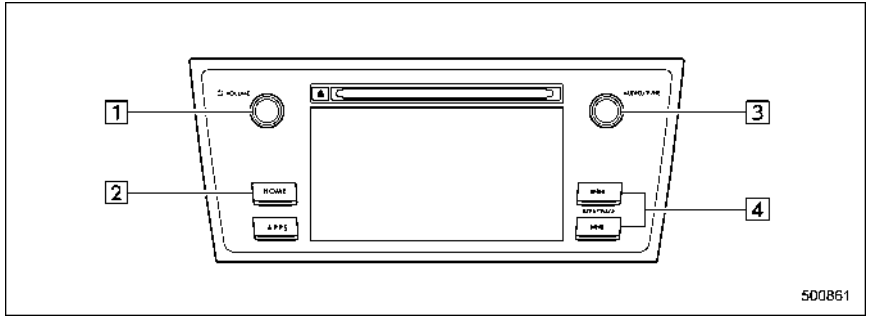

Audio panel

No.	Function
1	Turn to adjust volume. Press to turn the audio system on/off.
2	Press to display the sound setting screen. Refer to “Unit settings” ☞5-19.
3	Turn right to step up channels and turn left to step down channels. Press to select an audio source. Refer to “Selecting an audio source” ☞5-18.
4	Press to step up/down channels. Press and hold to step up/down channels fast.

▼ How to subscribe to SiriusXM Satellite Radio

To listen to a satellite radio broadcast in the vehicle, a subscription to the SiriusXM Satellite Radio service is necessary.

A SiriusXM Satellite Radio is a tuner designed exclusively to receive broadcasts provided under a separate subscription.

▽ How to subscribe

It is necessary to enter into a separate service agreement with SiriusXM Satellite Radio in order to receive satellite broadcast programming in the vehicle. Additional activation and service subscription fees apply that are not included in the purchase price of the vehicle and digital satellite tuner.

For complete information on subscription rates and terms, or to subscribe to SiriusXM Satellite Radio:

- U.S. customers:

Refer to www.siriusxm.com or call 1-866-635-2349

- Canadian customers:

Refer to www.siriusxm.ca or call 1-877-209-0079

⚠ WARNING

- **SiriusXM Satellite Radio Services — Legal Disclaimers and Warnings**
  - **Fees and Taxes — Subscription fee, taxes, one time activation fee, and other fees may apply. Subscription fee is consumer only. All fees and programming subject to change. Subscriptions subject to Customer Agreement available at www.siriusxm.com (U.S.) or www.siriusxm.ca (Canada). SiriusXM U.S. satellite and data services are available only in the contiguous USA and DC. SiriusXM satellite service is also available in Canada: see www.siriusxm.ca.**
    Explicit Language Notice — Channels with frequent explicit language are indicated with an "XL" preceding the channel name. Channel blocking is available for SiriusXM Satellite Radio receivers by notifying SiriusXM at:
    - **U.S. customers:**
    Visit www.siriusxm.com or call 1-866-635-2349
    - **Canadian customers:**
    Visit www.siriusxm.ca or call 1-877-209-0079

⚠ CAUTION

- **It is prohibited to copy, decompile, disassemble, reverse engineer, hack, manipulate or otherwise make available any technology or software incorporated in receivers compatible with the SiriusXM Satellite Radio System or that support the XM website, the Online Service or any of its content. Furthermore, the AMBE® voice compression software included in this product is protected by intellectual property rights including patent rights, copyrights, and trade secrets of Digital Voice Systems, Inc.**
- **Note: this applies to SiriusXM Satellite Radio receivers only and not XM Ready devices.**

– CONTINUED –

NOTE

- **SiriusXM Satellite Services — Descriptions**
  - **Only SiriusXM Satellite Radio® brings you more of what you love, all in one place. Get over 175 channels, including commercial-free music, plus the best sports, news, talk, comedy and entertainment. Welcome to the world of satellite radio. More information about SiriusXM Satellite Radio is available online at www.siriusxm.com (U.S.) and www.siriusxm.ca (Canada).**
- **SiriusXM Satellite Services — Subscription Instructions**
  - **For SiriusXM Services requiring a subscription (such as SiriusXM Satellite Radio, and some Infotainment & data services), the following paragraph shall be included.**
    Required SiriusXM Satellite Radio and some Infotainment & data services monthly subscriptions sold separately after trial period. Subscription fee is consumer only. All fees and programming subject to change. Subscriptions are subject to the Customer Agreement available at www.siriusxm.com (U.S.) or www.siriusxm.ca (Canada). Sirius, XM and all related marks and logos are trademarks of Sirius XM Radio Inc. All other marks, channel names and logos are the property of their respective owners.
    For more information, program schedules, and to subscribe or extend subscription after complimentary trial period; more information is available at:
    - **U.S. customers:**
      Visit www.siriusxm.com or call 1-866-635-2349
    - **Canadian customers:**
      Visit www.siriusxm.ca or call 1-877-209-0079
- **SiriusXM Satellite Radio is solely responsible for the quality, availability and content of the satellite radio services provided, which are subject to the terms and conditions of the SiriusXM Satellite Radio customer service agreement.**
- **Customers should have their radio ID ready; the radio ID can be found by tuning to "Ch 000" on the radio. For details, see "DISPLAYING THE RADIO ID" below.**
- **All fees and programming are the responsibility of SiriusXM Satellite Radio and are subject to change.**

▼ How to change the source

Select the "Sirius XM" key on the source select screen. Refer to "Selecting an audio source" ☞5-18.

▼ Presetting a channel

1. The presets list is displayed via either of the following procedures.
   - When you touch the List tab in the SiriusXM main screen (if the list that was displayed the last time is Presets).
   - When you select the ★ tab in each list screen.
2. The current channel is stored if you touch and hold the preset list key. You can store up to 30 channels (A beep sounds when a channel stored).

S01305

The playing icon is displayed for the currently selected channel.

▼ Selecting a channel from the list

1. The categories list is displayed via either of the following procedures.
   - When you touch the List tab in the SiriusXM main screen (if the list that was displayed the last time is Categories).
   - When you select the ■ tab in each list screen.
2. Each channel list is displayed when you select each category item.

S01306

In addition, the following messages appear.

Display Message	Contents
“Subscription Update” “Press OK to Continue”	An update to your SiriusXM subscription has been received by the SiriusXM tuner. Touch any key to continue.
“Channel XXX Not Available” (“XXX” refers to the selected channel number.)	This channel is not a valid SiriusXM channel. The channel number has been entered incorrectly, or the channel was removed from the SiriusXM channel lineup.
“Channel XXX Not Subscribed Call.” “Call SiriusXM to Subscribed.” (“XXX” refers to the selected channel number.)	This channel is not included in your SiriusXM subscription plan.
“Ch Locked” “Lock Code?”	The selected channel has been locked by the parental controls. A prompt to enter the unlock code will appear.
“Check Antenna”	Ensure the SiriusXM antenna cable is connected to the SiriusXM tuner correctly. Check the SiriusXM antenna wire for breaks or sharp bends. Replace the antenna if necessary.
“No Signal”	The vehicle must be outside, and the antenna must have a clear view of the southern sky.

NOTE

Contact SiriusXM

- **Listener Care Center (U.S. customers):**
1-866-635-2349
- **Listener Care Centre (Canadian customers):**
1-877-209-0079

– CONTINUED –

▼ Direct Tune

1. A channel input screen is displayed when you touch the ▦ tab.

S01195

2. Input any number and touch the “OK” key, receive the channel which input.

S01223

▼ SXM setting

1. An option menu screen is displayed when you touch the ⚙ tab on the lower left side of the screen. The “Options” screen will appear.

S01192

Option menu screen

No.	Function
1	Set the lock function of each channel. Input the password is necessary for operation.
2	Set the password of the lock function.

2. A password input screen is displayed when you touch the “Set” key of the Channel Lock function.

S01193

Password input screen

3. When the input password is approved, change to the lock channel selection screen.

S01194

Lock channel selection screen

4. In the channel list, touch the channel that should be locked.

▼ Displaying the Radio ID

Each SiriusXM tuner is identified with a unique radio ID. The “Radio ID” is required when activating an SiriusXM Satellite Services or when reporting a problem.

- If “Ch 000” is selected using the AUDIO/TUNE knob, the ID code will be displayed.
- Touch the ⚙ key. The Radio ID will be displayed on the “Options” screen.

S01308

■ aha™ by HARMAN

aha is a cloud-based application that connects to the system and gives you access to your favorite web content safely and easily. There are over 30,000 stations spanning internet radio, personalized music, audiobooks, Facebook, Twitter, restaurant and hotel searches, weather and more. For more about aha, go to the aha site (http://www.aharadio.com).

When connecting iPhone and iPod touch or Android devices with the aha application installed, you can control, view, and hear aha content through the system.

In order to connect to this system, use a USB port for an iPhone or iPod touch and Bluetooth for Android devices.

In this chapter, iPhone and iPod touch or Android devices will be referred to as a smartphone.

⚠ WARNING

Do not connect or operate the smartphone while driving. Doing so may result in loss of control of your vehicle and cause an accident or serious injury.

⚠ CAUTION

- **Do not leave your smartphone in the car. In particular, high temperatures inside the vehicle may damage the smartphone.**
- **Do not push down on or apply unnecessary pressure to the smartphone while it is connected as this may damage the smartphone or its terminal.**
- **Do not insert foreign objects into the port as this may damage the smartphone or its terminal.**

– CONTINUED –

▼ Control screen and panel

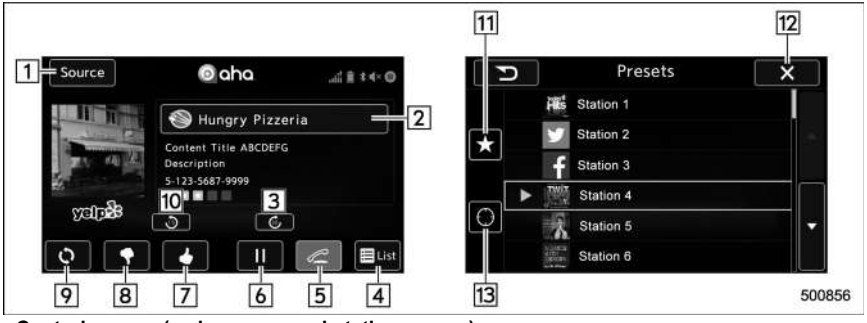

Control screen (main screen and station screen)

No.	Function
1	Select to display the audio source selection screen.
2	Select to open the station list. Refer to “Using aha application” ☞5-48.
3	Select to fast forward the current content item by 30 seconds.
4	Select to display the contents list of the selected station.
5	Select to make a phone call to the current content item. A phone number is distributed depending on content items. This feature is available only in these cases.

No.	Function
6	The track pauses when pressed during playback and plays back when touched during pause.
7	Select to set thumbs up.
8	Select to set thumbs down.
9	Select to start the playback from the beginning of the content in the target station.
10	Select to rewind the current content item by 15 seconds.
11	Select to display the preset list.
12	Return to the control screen.

No.	Function
13	Select to display the nearby list.

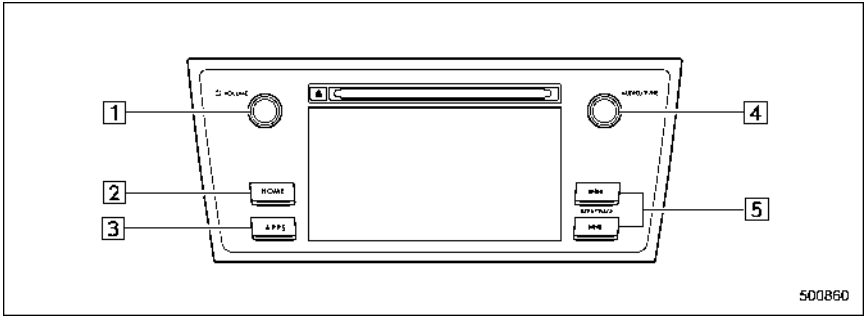

Audio panel

No.	Function
1	Turn to adjust volume. Press to turn the audio system on/off.
2	Press to display the sound setting screen. Refer to “Unit settings” ☞5-19.
3	Press to display the station operation screen. Press to select an audio mode.
4	Turn to display the next/previous content item. Press to select an audio source. Refer to “Selecting an audio source” ☞5-18.
5	Press to display the next/previous content item.

NOTE

- **For safety reasons, certain functions are not available while your vehicle is in motion.**
- **In order to maximize signal reception, performance and precision of the smartphone, please ensure the smartphone is placed as close to the system as possible, while ensuring it is stowed and secure while driving.**
- **When the ignition switch is in the “ACC” or “ON” position, the battery of the connected iPhone/iPod touch is charged.**
- **iPhone/iPod touch may not be recognized when the ignition switch is in the “ACC” or “ON” position. In this case, remove the iPhone/iPod touch and reconnect it.**
- **The accuracy of the displayed information or the signal reception performance depends on the smartphone or the connected device, and it’s wireless connection.**
- **Since the aha application uses signals from GPS satellites and wireless communication lines, it may not work properly in the following locations.**
  - **In a tunnel**
  - **In underground parking lots**

– CONTINUED –

– Outside wireless communication range, such as some countryside areas

– Where the wireless communication network is congested, or where communications are restricted

● Depending on the circumstances and environment, the signal may be weak or not be received. In such cases, an error may occur.

● Top 35 entries in the preset station list on the smartphone are displayed. When there are more than 35 entries in the preset station list, change the order of the entries in the list on the smartphone. You can change the priority of your preset stations within the aha application (after disconnected from this system) to modify the station list shown on the screen. Please see your smartphone aha application "Edit Presets (in Main menu)" to modify this list.

● For operating the smartphone, see the instruction manual that comes with it.

● If there are multiple music files stored on your iPhone or iPod touch, it may take some time until playback starts.

● Playback may be intermittent when you switch to streaming Bluetooth audio from aha on your smartphone device.

● When connecting the device via Bluetooth, the communication speed may become slower than via USB.

▼ Before using aha application

In order to use the aha application on this system, the application must be installed on the smartphone.

▽ Settings required to use aha application

● Search and download the aha application from your smartphone app store.

– iPhone and iPod touch: Apple App Store via iTunes

– Android device: Google Play Store

● Create an account and login to the aha application on the smartphone.

NOTE

Please use the latest version of the aha application.

▽ About app-based connected content

Requirements for using the connected content services of the aha application on this system.

● Latest version of the system is compatible with connected content application(s) for the smartphone, available from aha, downloaded to your smartphone.

● A current account with a wireless content service provider.

● A smartphone data plan: If the data plan for your smartphone does not provide for unlimited data usage, additional charges from your carrier may apply for accessing app-based connected content via 3G, 4G, Wi-Fi or 4G LTE wireless networks.

● Connection to the internet via 3G, 4G, Wi-Fi or 4G LTE networks.

NOTE

● Changes to product specifications may result in differences between the content of the manual and features of the product.

● Be careful not to exceed the data usage limits for your smartphone. Doing so will result in additional data usage charges from your phone carrier.

● Access to app-based connected content will depend on the availability of wireless cell and/or Wi-Fi network coverage for the purpose of allowing your smartphone to connect to the internet.

● Service availability may be geographically limited by region. Consult the wireless connected content service

provider for additional information.

- **Ability of this product to access connected content is subject to change without notice and could be affected by any of the following: compatibility issues with future firmware versions of the smartphone; compatibility issues with future versions of the connected content application(s) for the smartphone; changes to or discontinuation of the connected content application(s) or service by its provider.**
- **Communication and phone call charges for smartphones should be paid by the wireless subscriber.**
- **If you lose the data in a smartphone or other device while using it with the system, no compensation will be given for the lost data.**
- **Fuji Heavy Industries makes no guarantee regarding the content provided by aha.**
- **aha may not work due to factors on smartphones, smartphone applications or stations. Fuji Heavy Industries is not responsible for it.**

▽ About the supported devices

This system supports the following devices.

- For iPhone/iPod touch users

Type	Generation	Firmware version or OS
iPhone	iPhone 3G	iOS 4.2.x
	iPhone 3GS	iOS 6.1.x
	iPhone 4	iOS 7.0.x
	iPhone 4s	iOS 7.0.x
	iPhone 5	iOS 7.0.x
	iPhone 5c	iOS 7.0.x
	iPhone 5s	iOS 7.0.x
iPod touch	iPod touch	iOS 3.1.x
	iPod touch 2	iOS 4.2.x
	iPod touch 3	iOS 5.1.x
	iPod touch 4	iOS 6.1.x
	iPod touch 5	iOS 7.0.x

NOTE

Note that the warranty does not apply if an unsupported iPhone/iPod touch is connected.

- For Android device users

Android OS	Specification	Profile
Android Ver. 2.2 or Ver. 2.3	Bluetooth Specification Ver. 1.1 or higher (Ver. 2.0 + EDR or higher is recommended)	• aha Connect Binary API over SPP • Digital audio by A2DP

NOTE

The available functions may vary depending on the type of Android device.

▼ Connecting a smartphone

If you connect a smartphone to this system after starting a supported aha application on the smartphone, you can display and operate the aha application displayed on the smartphone on the system screen.

1. Run the aha application on your smartphone.
2. Connect the iPhone/iPod touch to the USB port or connect the Android device by utilizing the Bluetooth connection (SPP and A2DP profile).
   - For details about connecting an iPhone/iPod touch: Refer to “Connecting and disconnecting a USB memory/portable device” ☞5-17.
   - For details about registering or con-

– CONTINUED –

necting an Android device: Refer to "Registering/connecting Bluetooth® device" ☞5-65.

NOTE

When iPhone/iPod touch and Android devices are connected at the same time, iPhone/iPod touch is prioritized.

▼ How to change the source

- Select the "aha" key on the source select screen. Refer to "Basic operation" ☞5-18.
- Select the "aha" key on the APPS screen. Refer to "SUBARU STARLINK" ☞5-26.

NOTE

When starting-up "aha", there are some smartphone models for which "aha" application does not start up automatically.

▼ Using aha application

1. When the top screen is displayed, touch the station key.

S01212

Example of the main screen

2. Select the desired station from the list. The selected station is displayed.

S01213

NOTE

- **The following operations are not available on this system. Perform these operations on the smartphone.**
  - **Add/Reorder/Delete stations**
  - **Login to Facebook/Twitter**
- **For the aha function, the following touch screen gestures are not available.**
  - **Multi-touch operation**
  - **Double-tap**
- **For details on the services or the operations, check the aha site (http://www.aharadio.com) on the internet.**
- **The button display will vary depending on each station or content item.**

■ Pandora® (if equipped)

Pandora is an application for a smartphone. This can automatically select and play recommended tracks.

By rating the track currently playing, tracks that better match your preference will be recommended.

In order to connect to this system, use a USB port for an iPhone or iPod touch and Bluetooth for Android devices.

Depending on differences between models or software version etc., some models might be incompatible with this system.

This function is not available if the Pandora application has not been installed on the smartphone.

⚠ WARNING

Do not operate the player's controls or connect the smartphone while driving. Doing so may result in loss of control of your vehicle and cause an accident or serious injury.

⚠ CAUTION

- **Do not leave your smartphone in the car. In particular, high temperatures inside the vehicle may damage the smartphone.**
- **Do not push down on or apply unnecessary pressure to the smartphone while it is connected as this may damage the smartphone or its terminal.**
- **Do not insert foreign objects into the port as this may damage the smartphone or its terminal.**

NOTE

Follow the specific operation procedures for the smartphone application.

– CONTINUED –

▼ Control screen and audio panel

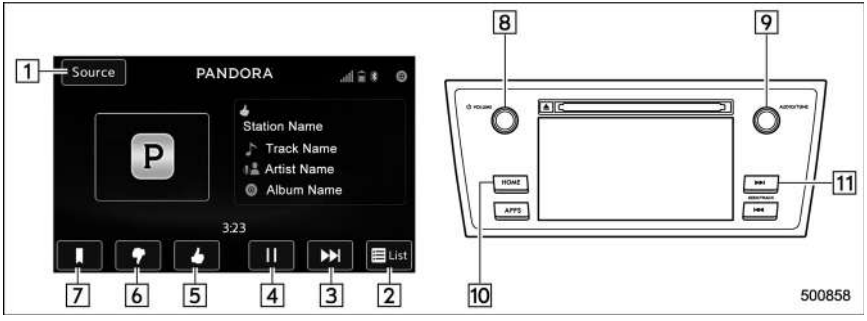

No.	Function
1	Select to display the audio source selection screen.
2	Select to open the station list. Refer to “Station list” ☞5-51.
3	Select to skip the current track.
4	The track pauses when touched during playback and plays when touched during pause.
5	Select to set thumbs up. This gives a high rating to the current song. All other similar songs will be played back more frequently.

No.	Function
6	Select to set thumbs down. This gives a low rating to the current song. All other similar songs will be played back less frequently. When you select thumbs down, the current track is skipped.
7	During playback of a station, you can use this key to bookmark a song or artist. Refer to “Registering Bookmarks” ☞5-51.
8	Turn to adjust volume. Press to turn the audio system on/off.
9	Turn clockwise to skip to the next track. Press to select an audio source. Refer to “Selecting an audio source” ☞5-18.
10	Press to display the sound setting screen. Refer to “Unit settings” ☞5-19.
11	Press to skip to the next track/cover art.

▼ Connecting a smartphone

Connect the iPhone/iPod touch to the USB port or connect the Android device by using Bluetooth connection (SPP and A2DP profile).

- For details about connecting an iPhone/iPod touch: Refer to “Connecting and disconnecting a USB memory/portable device” ☞5-17.
- For details about registering or connecting an Android device: Refer to “Registering/connecting Bluetooth® device” ☞5-65.

▼ How to change the source

The Pandora operation screen can be reached by the following methods:

- Connecting a Pandora device. Refer to “Connecting a Bluetooth device” ☞5-68 or “Connecting and disconnecting a USB memory/portable device” ☞5-17.
- Select the “Pandora” key on the source select screen. Refer to “Selecting an audio source” ☞5-18.
- Select the “Pandora” key on the APPS screen. Refer to “SUBARU STARLINK” ☞5-26.

NOTE

When starting-up Pandora, there are some smartphone models for which Pandora application does not start up automatically.

▼ Registering Bookmarks

You can register the music and artist now being played in Bookmark.

1. Touch the tab.
2. Select the desired key. The following items are appeared on the screen.

Item	Function
Track	When selected after the Bookmark key is pressed, the current track is bookmarked.
Artist	When selected after the Bookmark key is pressed, the current artist is bookmarked.
Cancel	Select to cancel the bookmark operation.

▼ Station list

You can select, add or delete a station. When the List tab is touched on the main screen, a station list will be displayed.

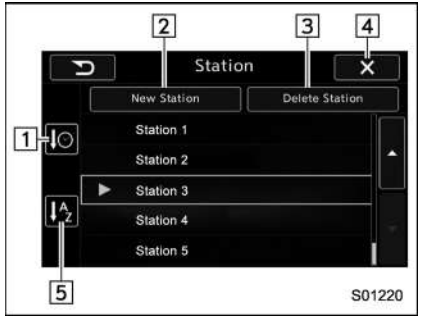

No.	Function
1	Select to sort the list in the chronological order of when the Station List was created.
2	Select to create a station. The station can be created using track names or artist names.
3	Select to delete a station.
4	Return to the control screen.
5	Select to sort the list based on the alphabetical order of the station names.

▽ Store the station

You can register a station.

1. Touch the List tab on the Pandora main screen.
2. Touch the “New Station” key, and then select the desired key.

Item	Function
From Track	Select to create a station using a track name.
From Artist	Select to create a station using an artist name.
Cancel	Select to cancel the operation to add a station.

▽ Delete the station

You can delete a station.

1. Touch the List tab on the Pandora top screen.
2. Touch the “Delete Station” key, and then the station list is appeared.
3. Select the item to delete the station. If the confirmation screen appears and the “OK” key is selected, the selected station will be deleted from station list.

– CONTINUED –

■ CD

▼ Control screen and audio panel

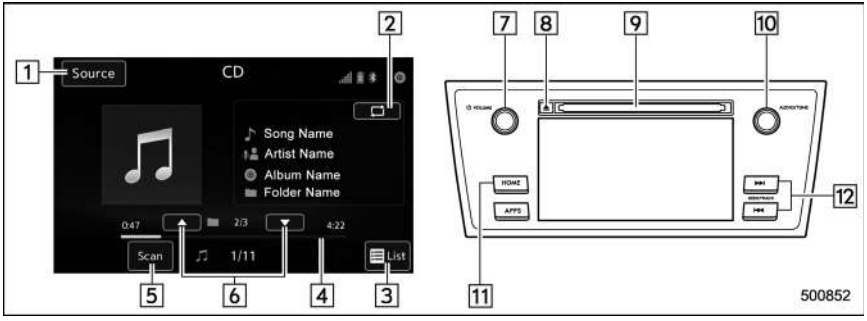

No.	Function
1	Select to display the audio source selection screen.
2	Select to display the play mode currently selected. Refer to “Select play mode” ☞5-53.
3	Audio CD: Select to display a track list. MP3/WMA/AAC disc: Select to display a folder list.
4	Shows progress.
5	The tracks in the disc are played back for 10 seconds each from the beginning of the track.

No.	Function
6	MP3/WMA/AAC disc: Select to choose a folder.
7	Turn to adjust volume. Press to turn the audio system on/off.
8	Press to eject a disc.
9	Disc slot
10	Turn to select a track/file. Press to select an audio source. Refer to “Selecting an audio source” ☞5-18.
11	Press to display the sound setting screen. Refer to “Unit settings” ☞5-19.
12	Press to select a track/file. Press and hold to fast forward/rewind.

NOTE

- **Depending on the compression data format of the inserted CD, some keys may not be displayed on the screen.**
- **If a disc contains CD-DA files and MP3/WMA/AAC files, only the CD-DA files can be played back.**
- **If a CD-TEXT disc is inserted, the title of the disc and track will be displayed. Up to 32 characters can be displayed.**
- **If the disc contains no CD-TEXT, only the track number would be displayed on the screen.**

▼ Loading a disc

⚠ CAUTION

Never try to disassemble the audio kit or lubricate any part of the CD player. Do not insert anything other than a disc into the slot.

Insert a disc into the disc slot. After insertion, the disc is automatically loaded.

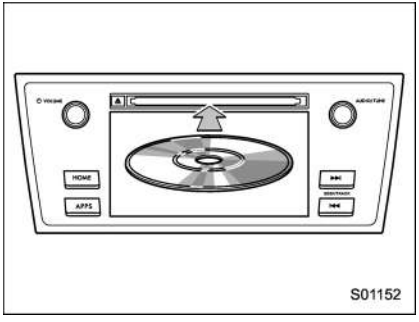

NOTE

When inserting a disc, gently insert it with the label facing up.

▼ Unloading a disc

Press the eject button to remove the disc.

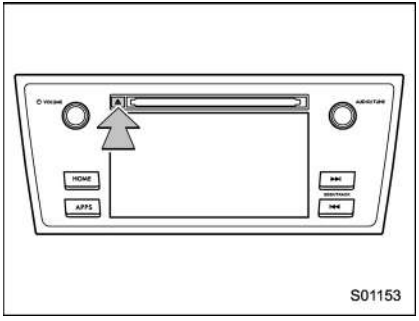

▼ How to change the source

The CD operation screen can be reached by the following methods:

- Insert a disc. Refer to “Loading a disc” ☞5-53.
- Select the “DISC” key on the source select screen. Refer to “Selecting an audio source” ☞5-18.

▼ Select play mode

The play mode settings display will appear when play mode key is touched. Select the preferred play mode from the following items.

Icon	Function
	Touch to start 1 track repeat.
	Touch to start repeat all.
	Touch to start folder repeat.
	Touch to start shuffle all.
	Touch to start shuffle folder.
	Return to the control screen.

NOTE

Depending on the compression data formant of the inserted CD, the displayed play mode may differ from the illustration shown here.

– CONTINUED –

■ USB memory

Audio files on the USB memory can be played.

⚠ WARNING

Do not operate the player's controls or connect the USB memory while driving. Doing so may result in losing control of your vehicle and cause an accident or serious injury.

⚠ CAUTION

- **Do not leave your USB memory in the car. In particular, high temperatures inside the vehicle may damage the USB memory.**
- **Do not push down on or apply unnecessary pressure to the USB memory while it is connected as this may damage the USB memory or its terminal.**
- **Do not insert foreign objects into the port as this may damage the USB memory or its terminal.**

▼ Control screen and audio panel

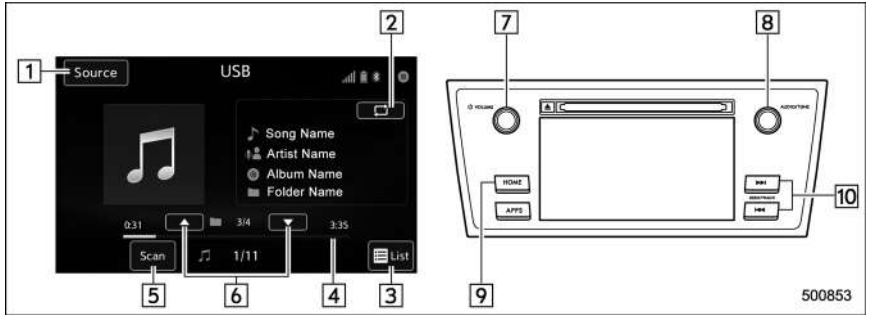

No.	Function
1	Select to display the audio source selection screen.
2	Select to display the play mode currently selected. Refer to "Select play mode" ☞5-55.
3	Select to display folder list.
4	Shows progress.
5	The tracks in the folder are played back 10 seconds each from the beginning of the track.
6	Select to choose a folder.
7	Turn to adjust volume. Press to turn the audio system on/off.

No.	Function
8	Turn to select a file/track. Press to select an audio source. Refer to "Selecting an audio source" ☞5-18.
9	Press to display the sound setting screen. Refer to "Unit settings" ☞5-19.
10	Press to select a file/track. Press and hold to fast forward/rewind.

▼ Connecting a USB device

You can connect a USB device to the vehicle USB port. Refer to “Connecting and disconnecting a USB memory/portable device” ☞5-17.

▼ How to change the source

The USB Audio playback screen can be reached by the following methods:

- Connect a USB memory. Refer to “Connecting and disconnecting a USB memory/portable device” ☞5-17.
- Select the “USB/iPod” key on the source select screen. Refer to “Selecting an audio source” ☞5-18.

▼ Select play mode

The play mode settings display will appear when play mode key is touched. Select the preferred play mode from the following items.

Icon	Function
	Touch to start 1 track repeat.
	Touch to start repeat all.
	Touch to start folder repeat.
	Touch to start shuffle all.
	Touch to start shuffle folder.
	Return to the control screen.

■ iPod

Audio files on the iPod can be played.

⚠ WARNING

Do not operate the player’s controls or connect the iPod while driving. Doing so may result in loss of control of your vehicle and cause an accident or serious injury.

⚠ CAUTION

- **Do not leave your portable player in the car. In particular, high temperatures inside the vehicle may damage the portable player.**
- **Do not push down on or apply unnecessary pressure to the portable player while it is connected as this may damage the portable player or its terminal.**
- **Do not insert foreign objects into the port as this may damage the portable player or its terminal.**

– CONTINUED –

▼ Control screen and audio panel

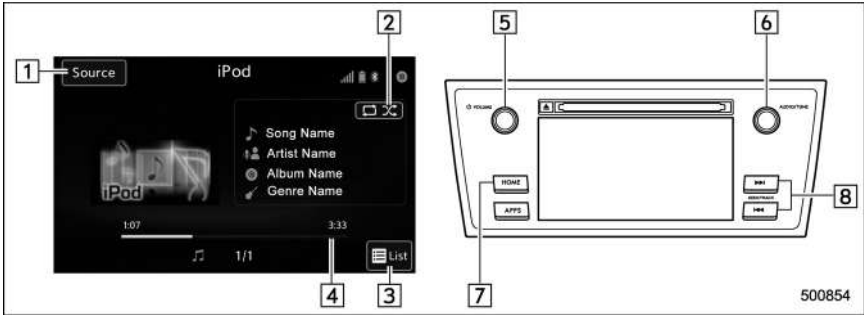

No.	Function
1	Select to display the audio source selection screen.
2	Select to display the play mode currently selected. Refer to “Select play mode” ☞5-57.
3	Select to display iPod List. Refer to “iPod settings” ☞5-57.
4	Shows progress.
5	Turn to adjust volume. Press to turn the audio system on/off.
6	Turn to select a track/file. Press to select an audio source. Refer to “Selecting an audio source” ☞5-18.
7	Press to display the sound setting screen. Refer to “Unit settings” ☞5-19.

No.	Function
8	Press to select a track/file. Press and hold to fast forward/rewind.

NOTE

- **When an iPod is connected using a genuine USB cable, the iPod starts charging its battery.**
- **When an iPod is connected and the audio source is changed to iPod mode, the iPod will resume playing from the same point it was last used.**
- **Depending on the iPod that is connected to the system, certain functions may not be available.**
- **Files/tracks selected by operating a connected iPod may not be recognized or displayed properly.**

▼ Connecting the iPod

You can connect an iPod to the vehicle USB port using the USB cable. Refer to “Connecting and disconnecting a USB memory/portable device” ☞5-17.

▼ How to change the source

The iPod operation screen can be reached by the following methods:

- Connect an iPod. Refer to “Connecting and disconnecting a USB memory/portable device” ☞5-17.
- Select the “USB/iPod” key on the source select screen. Refer to “Selecting an audio source” ☞5-18.

▼ Select play mode

The play mode settings display will appear when play mode key is touched. Select the preferred play mode from the following items.

Icon	Function
	Touch to start 1 track repeat.
	Touch to start repeat all.
	Touch to start shuffle all.
	Touch to turn off shuffle.
	Touch to start shuffle album.
	Return to the control screen.

▼ iPod settings

You can choose the following items from the list screen after touching the List tab on the screen.

Icon	Function
	Select to display the play list.
	Select to display tracks list.
	Select to display artists list.
	Select to display albums list.
	Select to open other list (“Genres”, “Composers”, “Audiobooks” and “Podcast”).
	Select to open “Genres” list.
	Select to open “Composers” list.
	Select to open “Audiobooks” list.
	Select to open “Podcasts” list.

■ Bluetooth audio

The Bluetooth audio system enables users to enjoy listening to music that is played on a portable player on the vehicle speakers via wireless communication.

This audio system supports Bluetooth, a wireless data system capable of playing portable audio music without cables. If your device does not support Bluetooth, the Bluetooth audio system will not function.

⚠ WARNING

- **Do not operate the player’s controls or connect to the Bluetooth audio system while driving. Doing so may result in loss of control of your vehicle and cause an accident or serious injury.**
- **Your audio unit is fitted with Bluetooth antennas. People with implantable cardiac pacemakers, cardiac resynchronization therapy-pacemakers or implantable cardioverter defibrillators should maintain a reasonable distance between themselves and the Bluetooth antennas. The radio waves may affect the operation of such devices.**

– CONTINUED –

- **Before using Bluetooth devices, users of any electrical medical device other than implantable cardiac pacemakers, cardiac re-synchronization therapy-pacemakers or implantable cardioverter defibrillators should consult the manufacturer of the device for information about its operation under the influence of radio waves. Radio waves could have unexpected effects on the operation of such medical devices.**

⚠ CAUTION

Do not leave your portable player in the vehicle. In particular, high temperatures inside the vehicle may damage the portable player.

▼ Control screen and audio panel

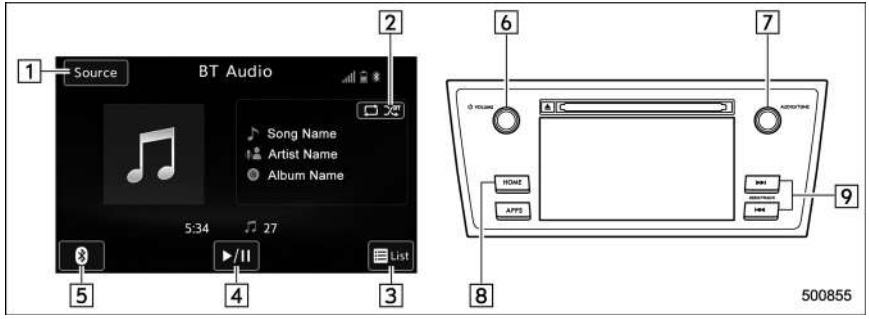

No.	Function
1	Select to display the audio source selection screen.
2	Select to display the play mode currently selected. Refer to “Select play mode” ☞5-60.
3	Select to display as a list (for the models with AVRCP Ver. 1.4 or higher).
4	The track pauses when touched during playback and plays when touched during pause.
5	Select to open Bluetooth Settings. Refer to “Setting Bluetooth details” ☞5-68.
6	Turn to adjust volume. Press to turn the audio system on/off.

No.	Function
7	Turn to select a track. Press to select an audio source. Refer to “Selecting an audio source” ☞5-18.
8	Select to display the sound setting screen. Refer to “Unit settings” ☞5-19.
9	Press to select a track. Press and hold to fast forward/rewind.

NOTE

- **Depending on the Bluetooth device that is connected to the system, the music may start playing when selecting the ▶/II key while it is paused. Conversely, the music may pause when selecting the ▶/II key while it is playing.**
- **In the following conditions, the system may not function:**
  - **– The Bluetooth device is turned off.**
  - **– The Bluetooth device is not connected.**
  - **– The Bluetooth device has a low battery.**
- **It may take time to connect the phone when Bluetooth audio is being played.**
- **For operating the portable player, see the instruction manual that comes with it.**
- **If the Bluetooth device is disconnected due to poor reception from the Bluetooth network when the ignition switch is in the "ACC" or "ON" position, the system will automatically reconnect to the portable player.**
- **If the Bluetooth device is disconnected on purpose, such as it was turned off, this does not happen. Reconnect the portable player manually.**
- **Bluetooth device information is registered when the Bluetooth device is connected to the Bluetooth audio system. When selling or disposing of the vehicle, remove the Bluetooth audio information from the system. Refer to "Bluetooth® settings" ☞5-65.**

▼ Connecting a Bluetooth device

To use the Bluetooth audio system, it is necessary to register a Bluetooth device with the system.

- Registering an additional device

1. Select the "Add" key on the Bluetooth devices connection screen.
2. For more information: Refer to "Registering/connecting Bluetooth® device" ☞5-65.

- Selecting a registered device

1. Select the "Select" key on the Bluetooth devices connection screen.
2. For more information: Refer to "BT Devices Connection screen" ☞5-68.

▼ How to change the source

Select the "BT Audio" key on the source select screen. Refer to "Selecting an audio source" ☞5-18.

NOTE

Depending on the type of portable player connected, some functions may not be available and/or the screen may look differently than shown in this manual.

– CONTINUED –

▼ Select play mode

The play mode settings display will appear when play mode key is touched. Select the preferred play mode from the following items.

Icon	Function
	Touch to start 1 track repeat.
	Touch to start repeat all.
	Touch to repeat the tracks in the group.
	Touch to start shuffle all.
	Touch to play tracks in the order in which they are registered in the audio device.
	Touch to start shuffle group.
	Return to the control screen.

NOTE

If the connected device does not support the group repeat mode, the group functions are not available.

■ AUX

WARNING

Do not operate the player's controls or connect the portable audio device while driving. Doing so may result in loss of control of your vehicle and cause an accident or serious injury.

CAUTION

- **Do not leave portable audio device in the vehicle. The temperature inside the vehicle may become high, resulting in damage to the player.**
- **Do not push down on or apply unnecessary pressure to the portable audio device while it is connected as this may damage the portable audio device or its terminal.**
- **Do not insert foreign objects into the port as this may damage the portable audio device or its terminal.**

▼ Control screen and audio panel

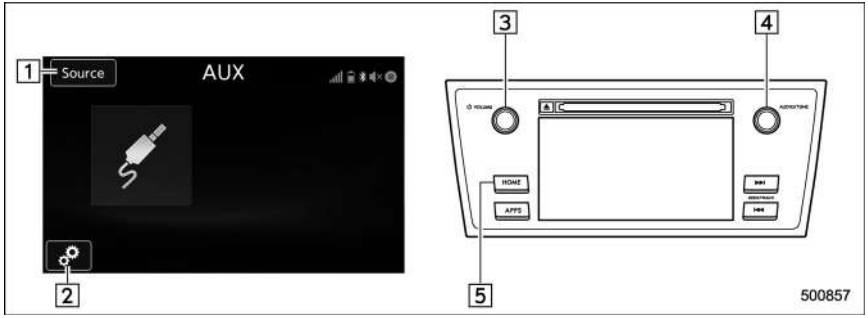

No.	Function
1	Select to display the audio source selection screen.
2	Select to adjust the audio gain level. Refer to “Audio level settings” ☞5-61.
3	Turn to adjust volume. Press to turn the audio system on/off.
4	Press to select an audio source. Refer to “Selecting an audio source” ☞5-18.
5	Press to display the sound setting screen. Refer to “Unit settings” ☞5-19.

▼ Connecting a portable audio device

You can connect a portable audio device to the vehicle AUX jack. Refer to “Connecting and disconnecting a USB memory/portable device” ☞5-17.

▼ How to change the source

The AUX operation screen can be reached by the following methods:

- Connect a portable audio device. Refer to “Connecting and disconnecting a USB memory/portable device” ☞5-17.
- Select the “AUX” key on the source select screen. Refer to “Selecting an audio source” ☞5-18.

▼ Audio level settings

You can set the audio gain level.

1. Select the ⚙ tab on the screen, and then touch the right side key of the “Audio Level” key.
2. Select the audio level from the following items.
   - Low
   - Mid
   - High

Steering switches for audio

Some parts of the audio/visual system can be adjusted using the switches on the steering wheel.

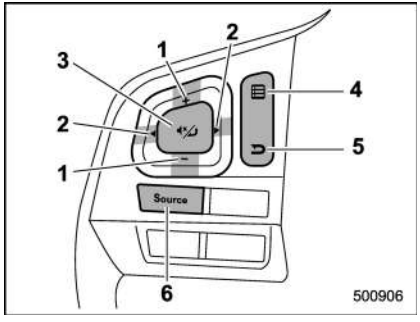

1) + − switch
2) ◀▶ switch
3) Mute/Enter switch
4) List switch
5) Back switch
6) Source switch

- +/− switch

Mode	Operation	Function
Except list screen	Press	Volume up/down
	Press and hold	Volume up/down continuously
List screen	Press	Move cursor up/down
Pandora main screen (if equipped)	Press and hold	“+” switch is thumb up/“−” switch is thumb down

- ◀/▶ switch

Mode	Operation	Function
AM/FM Radio, SiriusXM (if equipped)	Press	Preset channel up/down
	Press and hold	Seek up/down continuously while the switch is being pressed
aha	Press	Content up/down
	Press and hold	Reverse the current content item for 15 seconds/Fast forward the current content item for 30 seconds
Audio CD, MP3/WMA/AAC disc, USB, iPod, BT audio	Press	Select a track/file
	Press and hold	Fast forward/rewind
Pandora (if equipped)	Press and hold	Thumbs up
List screen	Press	Move cursor left/right

– CONTINUED –

- Mute/Enter switch

Mode	Operation	Function
List screen	Press	Select cursor entry
CD, USB, iPod, BT audio, Pandora (if equipped), aha	Press	Pause or play back
AM/FM radio, AUX, SiriusXM (if equipped)	Press	Mute or cancel mute

- Back switch

Mode	Operation	Function
All (except for SUBARU STARLINK)	Press	Return to the previous screen
All	Press and hold	Return to the HOME screen

- List switch

Mode	Operation	Function
All (except for SUBARU STARLINK)	Press	Show list screen

- Source switch

Mode	Operation	Function
All	Press	Change audio modes

NOTE

In the aha, Pandora (if equipped) and SUBARU STARLINK (if equipped) mode, some operation may be done on the screen depend on the selected APPS.

Bluetooth® settings

WARNING

Be sure to park the vehicle in a safe location before connecting or operating a Bluetooth phone or audio device. Failure to do so may result in loss of control of your vehicle and cause an accident or serious injury.

■ Regulatory information

The Bluetooth® word mark and logos are registered trademarks owned by Bluetooth SIG, Inc.

■ Registering/connecting Bluetooth® device

You can register up to five devices, regardless of whether they are Bluetooth phones or audio devices.

NOTE

- **Once the phone has been registered, it is possible to use the hands-free system or Bluetooth audio.**
- **Devices cannot be registered during driving.**

▼ Registering a Bluetooth phone for the first time

To use the hands-free system, it is necessary to register a Bluetooth phone with the system.

For details about registering a Bluetooth device: Refer to “Registering a Bluetooth Audio device for the first time” ☞5-66.

1. Turn the Bluetooth connection setting of your cell phone on.
   - This function is not available when Bluetooth connection setting of your cell phone is set to off.
2. Press the HOME button and select the “SETTINGS” key.
3. Touch the tab and then the “SETTINGS” screen will appear.

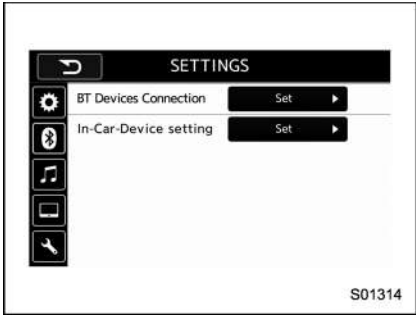

Settings (When the tab is selected)

   - Operations up to this point can also be performed by pressing the off hook switch on the steering wheel.
4. To register a device, touch the “Set” key on “BT Devices Connection”.

– CONTINUED –

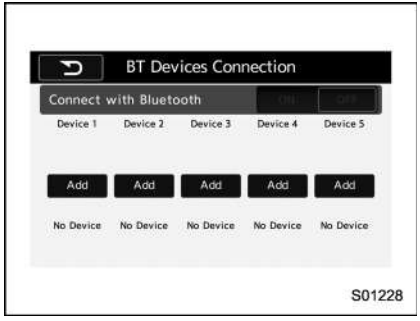

"BT Devices Connection" screen (At the initial startup and when no device is registered).

5. Touch the "Add" key.

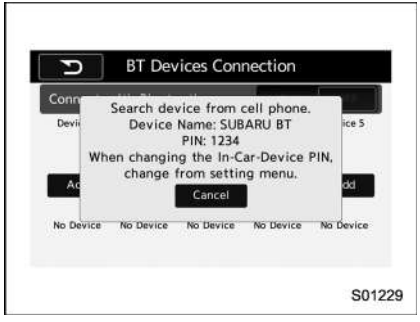

When the "Add" key is selected (Waiting for the connection request from a device).

- For details about operating the Bluetooth device, see the manual that comes with it.
- To cancel the registration, touch the "Cancel" key.

6. Register the Bluetooth device using your Bluetooth device.
   - A PIN-code is not required for SSP (Secure Simple Pairing) compatible Bluetooth devices. Depending on the type of Bluetooth device being connected, a message confirming registration may be displayed on the Bluetooth device's screen. Respond and operate the Bluetooth device according to the confirmation message.
7. Check that the screen is displayed when registration is complete.
   - The system waits for connection requests coming from the registered device.
   - At this stage, the Bluetooth functions are not yet available.

▼ Registering a Bluetooth Audio device for the first time

To use the Bluetooth Audio, it is necessary to register an audio device with the system.

The device registration procedure is the same for both the hands-free system and Bluetooth audio.

1. Display the "BT Devices Connection" screen. Refer to "Registering a Bluetooth phone for the first time" ☞5-65.
2. Select the "Add" key.

The "Add" key is not displayed when five devices are already registered.

To add another device, you need to delete one of the registered devices.

Press the 🗑 key for the device to be deleted, and then select the "OK" key.

3. Register the Bluetooth device using your Bluetooth device.
   - A PIN-code is not required for SSP (Secure Simple Pairing) compatible Bluetooth devices. Depending on the type of Bluetooth device being connected, a message confirming registration may be displayed on the Bluetooth device's screen. Respond and operate the Bluetooth device according to the confirmation message.
4. Check that the screen is displayed when registration is complete.
   - The system waits for connection requests coming from the registered device.
   - At this stage, the Bluetooth functions are not yet available.

▼ Profiles

This system supports the following services.

Bluetooth Device	Spec.	Function	Requirements	Recommendations
Bluetooth Phone/Bluetooth Audio Device	Bluetooth Specification	Registering a Bluetooth device	Ver. 1.1	Ver. 2.1 + EDR

Bluetooth Device	Profile	Function	Requirements	Recommendations
Bluetooth Phone	HFP (Hands-Free Profile)	Hands-free system	Ver. 1.0	Ver. 1.5
	OPP (Object Push Profile)	Transferring the contacts	Ver. 1.1	Ver. 1.1
	PBAP (Phone Book Access profile)		Ver. 1.0	Ver. 1.0
	SPP (Serial Port Profile)	Connecting a Bluetooth phone	—	Ver. 1.1
Bluetooth Audio Device	A2DP (Advanced Audio Distribution Profile)	Bluetooth audio system	Ver. 1.0	Ver. 1.2
	AVRCP (Audio/Video Remote Control Profile)		Ver. 1.0	Ver. 1.4

NOTE

- **If your cell phone does not support HFP, registering the Bluetooth phone or using OPP, PBAP, or SPP profiles individually will not be possible.**
- **If the connected Bluetooth device version is older than recommended or incompatible, the Bluetooth device function may not work properly.**
- **For USA customers, please visit www.subaru.com for details. Outside of the USA customers, contact your local dealer to arrange a demonstration in order to confirm whether or not the device can be paired with the vehicle.**

– CONTINUED –

■ Setting Bluetooth details

▼ BT Devices Connection screen

1. Press the HOME button.
2. Touch the “SETTINGS” key and then touch the tab.
3. Touch the “BT Devices Connection” key and then select the desired device to register.

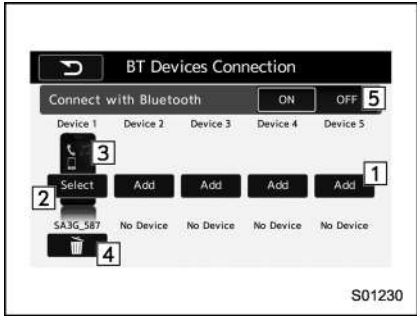

“BT Devices Connection” screen (One device is registered.)

No.	Function
1	Register the device. Refer to “Registering/connecting Bluetooth® device” ☞5-65.
2	Make the connection to the registered device.
3	This shows the status of the device connection profile. (The icon illuminates while connected.)
4	Delete the registered device. Refer to “Deleting a Bluetooth device” ☞5-69.
5	Switch to connect/disconnect Bluetooth communication. Refer to “Bluetooth ON/OFF” ☞5-68.

▽ Connecting a Bluetooth device

Up to 5 Bluetooth devices (phones and audio devices) can be registered.

If more than 1 Bluetooth device has been registered, select which device to connect to.

1. Display the “BT Devices Connection” screen. Refer to “BT Devices Connection screen” ☞5-68.
2. Select the device to be connected.
   - Supported profile icons will be displayed.
   – : Phone
   – : Audio device
   – : Smartphone Application
   - Supported profile icons for currently connected devices will illuminate.
   - The audio icon illuminates only when in the Bluetooth audio mode.
   - All icons are dimmed when Bluetooth is set to off or when the connection cannot be made with the device.

NOTE

- **It may take time if the device connection is carried out during Bluetooth audio playback.**
- **Depending on the type of Bluetooth device being connected, it may be necessary to perform additional steps on the device.**
- **It is not possible to establish a Bluetooth connection with iOS devices currently connected with a USB cable.**
- **Supported profile icons of the unselected devices are not displayed if several Bluetooth devices have been registered.**

▽ Bluetooth ON/OFF

1. Display the “BT Devices Connection” screen. Refer to “BT Devices Connection screen” ☞5-68.
2. Select the “ON” or “OFF” key by the right side of the “Connect with Bluetooth” key. The “ON” key establishes a connection, and the “OFF” key disconnects the connection.

NOTE

The setting is fixed as the "OFF" key when no device is registered.

▽ Deleting a Bluetooth device

1. Display the "BT Devices Connection" screen. Refer to "BT Devices Connection" ☞5-68.
2. Select the desired device.
3. Touch the 🗑 key for the device to be deleted, and then select the "OK" key.

NOTE

When deleting a Bluetooth phone, the contact data will be deleted at the same time.

▼ "In-Car-Device setting" screen

The Bluetooth settings can be confirmed and changed.

1. Display the "SETTINGS" screen. Refer to "Registering a Bluetooth phone for the first time" ☞5-65.
2. On the "SETTINGS" screen for "In-Car-Device setting", select the "Set" key.

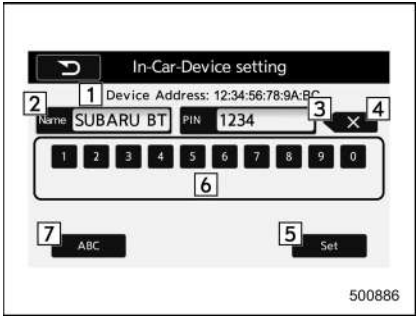

No.	Function
1	Display the Bluetooth device address of the in-vehicle equipment.
2	Display the Bluetooth device name of the in-vehicle equipment. The default name is "SUBARU BT", which can be changed by selecting it and entering alphanumeric characters.
3	Display the PIN code of the in-vehicle equipment. The default code is "1234", which can be changed by selecting it and entering numbers.
4	Delete one character from the currently selected item (BT device name or the PIN code).
5	Save the current BT device name and PIN code.
6	Numeric input keys.
7	Switch the screen to input characters.

▽ Editing the Bluetooth device name

The device name can be set or changed.

1. Touch the "Name" key.
2. Enter a name and then select the "Set" key.

▽ Editing the PIN-Code

The PIN-code can be set or changed.

1. Select the "PIN" Key.
2. Enter a PIN-code and then select the "Set" key.

NOTE

If the "PIN" key is already selected, the "ABC" key is cross-hatched and disabled.

Hands-free phone system

The hands-free system enables calls to be made and received without having to take your hands off the steering wheel.

This system supports Bluetooth. Bluetooth is a wireless data system that enables cell phones to be used without being connected by a cable or placed in a cradle.

The operating procedure of the phone is explained here.

WARNING

- **While driving, do not use a cell phone or connect the Bluetooth phone. Doing so may result in loss of control of your vehicle and cause an accident or serious injury.**
- **Your audio unit is fitted with Bluetooth antennas. People with implantable cardiac pacemakers, cardiac resynchronization therapy-pacemakers or implantable cardioverter defibrillators should maintain a reasonable distance between themselves and the Bluetooth antennas. The radio waves may affect the operation of such devices.**
- **Before using Bluetooth devices, users of any electrical medical device other than implantable cardiac pacemakers, cardiac resynchronization therapy-pacemakers or implantable cardioverter defibrillators should consult the manufacturer of the device for information about its operation under the influence of radio waves. Radio waves could have unexpected effects on the operation of such medical devices.**

CAUTION

Do not leave your cell phone in the vehicle. The temperature inside may rise to a level that could damage the phone.

NOTE

- **If your cell phone does not support Bluetooth, this system cannot function.**
- **In the following conditions, the system may not function:**
  - **The cell phone is turned off.**
  - **The current position is outside the communication area.**
  - **The cell phone is not connected.**
  - **The cell phone has a low battery.**
- **When using the hands free function and other Bluetooth functions at the same time, the following problems may occur:**
  - **The Bluetooth connection may be cut.**
  - **Noise may be heard when playing back voice with the Bluetooth function.**
- **The other party's voice will be heard from the front speakers. The audio/visual system will be muted during phone calls or when hands-free voice commands are used.**
- **Talk alternately with the other party on the phone. If both parties speak at the same time, the other party may not hear what has been said. (This is not a malfunction.)**
- **Keep call volume down. Otherwise, the other party's voice may be audible outside the vehicle and voice echo may increase. When talking on the phone, speak clearly towards the microphone.**
- **The other party may not hear you clearly when:**
  - **Driving on an unpaved road. (Making excessive traffic noise.)**
  - **Driving at high speeds.**
  - **The moonroof or windows are open.**
  - **The air conditioning vents are**

pointed towards the microphone.
– The sound of the air conditioning fan is loud.
– There is a negative effect on sound quality due to the phone and/or network being used.

- When another phone is connected, the following registered data cannot be read:
  – Contact data
  – Call history data
  – All phone settings
- When selling or disposing of the vehicle, initialize the data. Refer to "Unit settings" ☞5-19.
- Once initialized, the data and settings will be erased. Take extra caution when initializing the data.
- The voice command system supports phone commands, so dialing a phone number using your voice is possible. Refer to "Voice command system" ☞5-80.
- The images shown in this Owner's Manual are sample images. The actual images may vary depending on the market and specifications of your vehicle.

■ Control screen

PHONE (Menu) screen

PHONE (Dialpad) screen

No.	Function
1	Open the "Incoming Calls" screen. Refer to "By incoming calls" ☞5-73.
2	Open the "Outgoing Calls" screen. Refer to "By outgoing calls" ☞5-74.
3	Open the "Contacts" screen. Refer to "By contacts list" ☞5-74.
4	Open the dialpad screen. Refer to "By Dialpad" ☞5-75.
5	Open the phone volume settings screen. Refer to "Phone volume settings" ☞5-78.
6	Use to make a phone call. You cannot press this key until you open the dialpad screen and enter a phone number.
7	Open the "BT Devices Connection" screen. Refer to "Setting Bluetooth details" ☞5-68.
8	Enter the phone number that you want to call.
9	Switch the screen to the phone (menu) screen.

NOTE

When the cell phone is not registered and the Bluetooth setting is off, a message is displayed instead of menu items.

– CONTINUED –

■ Registering/connecting a Bluetooth phone

To use the hands-free system for cell phones, it is necessary to register a cell phone with the system. Refer to “Registering/connecting Bluetooth® device” ☞5-65.

▼ Bluetooth phone condition display

The condition of the Bluetooth phone appears on the upper right side of the screen.

■ Using the phone switch/microphone

- Steering switch

By pressing the steering switch, a call can be received or ended without taking your hands off the steering wheel.

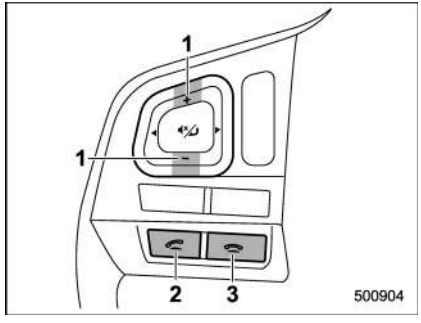

1) Volume control switch
2) Off hook switch
3) On hook switch

- Microphone

The microphone is used when talking on the phone.

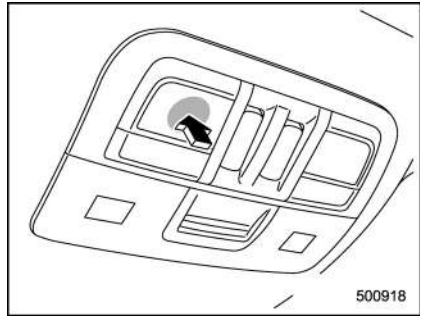

Type A

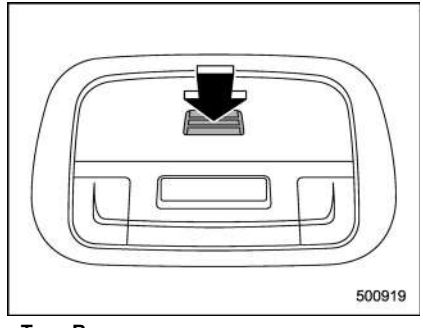

Type B

■ How to change the hands-free phone system

The phone (menu) screen can be used to make a phone call. To display the hands-free operation screen, press the HOME button and then select the “PHONE” key, or press the off hook switch on the steering wheel.

■ Making a call

There are several methods by which a call can be made, as described below.

1. Press the HOME button on the audio panel.
2. Touch the “PHONE” key.
3. Select the desired key to make a call from the list.

500887

Item	Function
Incoming Calls	Display the history of incoming calls. Refer to “By incoming calls” ☞5-73.
Outgoing Calls	Display the history of outgoing calls. Refer to “By outgoing calls” ☞5-74.
Contacts	Display the phonebook. Refer to “By contacts list” ☞5-74.
Dialpad	Dial a phone number. Refer to “By Dialpad” ☞5-75.

NOTE

You can also make a call by using the following functions.

- **Make a call using the off hook switch on the steering wheel. Refer to “By off hook switch” ☞5-76.**
- **Make a call using voice operation. Refer to “Voice command system” ☞5-80.**

▼ By incoming calls

On the phone (menu) screen, select the “Incoming Calls” key to open the “Incoming Calls” screen.

You can make a call by selecting an item in the incoming call history list.

If there is no incoming call history, a message appears to indicate that there is no incoming call history data.

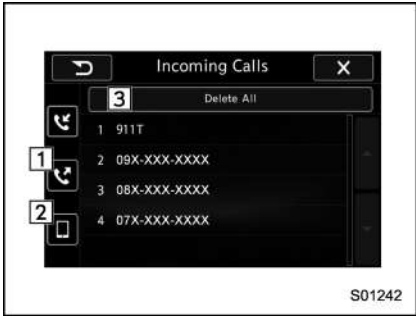

S01242

Incoming Calls screen

No.	Function
1	Open the “Outgoing Calls” screen.
2	Open the “Contacts” screen.
3	Delete all incoming call history data. The “Delete All” key is disabled when there is no incoming call history.

– CONTINUED –

When you select an item in the history list on the “Incoming Calls” screen, the outgoing call screen opens.

NOTE

- **Up to 10 items in the incoming call history are listed. Scroll the screen to see items that are not on the screen.**
- **When making a call to the same number continuously, only the most recent call is listed in call history.**
- **When a phone number registered in the contact list is received, the name is displayed.**
- **Number-withheld calls are also memorized in the system.**
- **International phone calls may not be made depending on the type of cell phone you have.**
- **The list should group together consecutive entries with the same phone number and same call type.**

▼ By outgoing calls

On the phone (menu) screen, select the “Outgoing Calls” key to open the “Outgoing Calls” screen. You can make a call by selecting an item in the outgoing call history list.

If there is no outgoing call history, a message appears to indicate that there is no outgoing call history data.

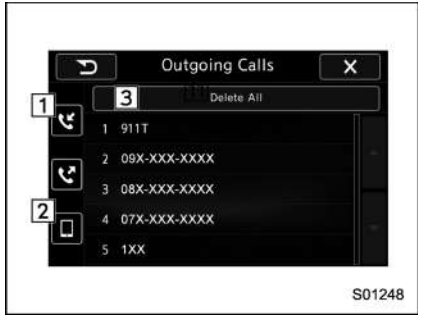

Outgoing Calls screen

No.	Function
1	Open the “Incoming Calls” screen.
2	Open the “Contacts” screen.
3	Delete all outgoing call history data. The “Delete All” key is disabled when there is no outgoing call history.

When you select an item in the history list on the “Outgoing Calls” screen, the outgoing call screen opens.

NOTE

- **Up to 10 items in the outgoing call history are listed. Scroll the screen to see items that are not on the screen.**
- **When making a call to the same number continuously, only the most recent call is listed in call history.**
- **When a phone number registered in the contact list is received, the name is displayed.**
- **Number-withheld calls are also memorized in the system.**
- **International phone calls may not be made depending on the type of cell phone you have.**
- **The list should group together consecutive entries with the same phone number and same call type.**

▼ By contacts list

On the phone (menu) screen, select the “Contacts” key to open the phone number list screen.

You can make a call by selecting an item in the list (up to five phone numbers are listed).

If there is no contact data, a message is displayed to indicate that there is no

contact data.

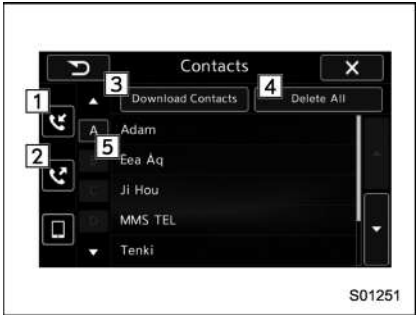

Contacts screen

No.	Function
1	Open the “Incoming Calls” screen.
2	Open the “Outgoing Calls” screen.
3	Open a pop-up screen for starting the download of contact data. Refer to “Update contacts from phone” ☞5-79.
4	Delete all contact data. The “Delete All” key is disabled when there is no contact data. Refer to “Deleting the contact data” ☞5-80.
5	Open a list of contacts that starts with the selected character. This key is cross-hatched and cannot be selected if there is no contact data that starts with the selected character.

Select the up/down arrow key to scroll the list of contacts.

When you select a phone number on the screen, the outgoing call screen opens.

NOTE

Up to 1000 items in the contact data are listed. Scroll the screen to see items that are not on the screen.

▽ When the contact is empty

For PBAP incompatible but OPP compatible Bluetooth phones

On the “Contacts” screen, select the “Download Contacts” key. A screen where you can select how to download contacts opens.

You can select to download all items or download one item. For details, refer to “Update contacts from phone” ☞5-79.

▽ Delete contacts

When the “Delete All” key is selected, all contact data downloaded into the in-vehicle equipment will be deleted.

Refer to “Deleting the contact data” ☞5-80.

▼ By Dialpad

Input the phone number manually using the keypad displayed on the screen.

Phone (Dialpad) screen

No.	Function
1	Allow you to enter numbers from 0 to 9 and *, #, and +. To enter “+”, press and hold the “0” key.
2	Delete one character from the entered characters.

– CONTINUED –

No.	Function
3	Switch the screen to the phone (menu) screen.
4	Open the “Outgoing Calls” screen and dials the entered phone number. This is the same as pressing the off hook switch on the steering wheel. This key is cross-hatched and cannot be selected until the phone number is entered.
5	Open the “Options” screen. Refer to “Phone volume settings” ☞5-78.
6	Open the “BT Devices Connection” screen. Refer to “Setting Bluetooth details” ☞5-68.

When you enter a phone number on the screen and select the key, the “Outgoing Call” screen opens.

▼ By off hook switch

Calls can be made using the latest call history item.

1. Press the off hook switch on the steering wheel to display the phone (menu) screen.
2. Check that the call screen is displayed.

▼ Outgoing screen

Outgoing call screen

No.	Function
1	Open the “Options” screen. Refer to “Phone volume settings” ☞5-78.
2	Abort the call. The screen returns to the phone (menu) screen. This is the same as pressing the on hook switch on the steering wheel.

NOTE

- **Depending on the type of Bluetooth phone being connected, it may be necessary to perform additional steps on the phone.**
- **When you are on the outgoing call screen, the screen changes to the call screen when the other party answers the call.**
- **The , , and keys are disabled on the outgoing call screen.**

■ Receiving a call

▼ Incoming calls

When a call is received, the incoming call screen is displayed with a sound.

When you receive a phone call while the cell phone is connected, the screen changes to the incoming call screen.

Incoming call screen

No.	Function
1	Open the “Options” screen. Refer to “Phone volume settings” ☞5-78.

No.	Function
2	Put the incoming call on hold. This function may not work on some cell phone models. This function is the same as pressing the on hook switch on the steering wheel for a short period of time.
3	Open the call screen. This function is the same as pressing the off hook switch on the steering wheel.
4	Reject the incoming call. This function is the same as pressing and holding the on hook switch on the steering wheel.

NOTE

- **During international phone calls, the other party's name or number may not be displayed correctly depending on the type of cell phone you have.**
- **The ringtone that has been set in the phone setting screen sounds when there is an incoming call. Depending on the type of Bluetooth phone, both the system and Bluetooth phone may sound simultaneously when there is an incoming call. Refer to "Phone volume settings" ☞5-78.**

▼ By off/on hook switch

When you receive a call, you can also answer it by pressing the off hook switch on the steering wheel. To end a call, press the on hook switch.

■ Talking on the phone

The call screen opens when you perform the following operations.

- When you accept a call on the incoming call screen (by selecting the key), the call screen opens.
- When you are on the outgoing call screen, the screen changes to the call screen when the other party answers the call.

While talking on the phone, this screen is displayed. The operations outlined below can be performed on this screen.

- When the incoming call screen is displayed and you accept the call, the screen changes to the call screen. The screen stays on the incoming call screen if you reject the call.
- The and keys are disabled on the incoming call screen.

Call screen

Call (Dialpad) screen (DTMF)

– CONTINUED –

No.	Function
1	Open the “Options” screen. Refer to “Phone volume settings” ☞5-78.
2	Mute your voice to the other party. Touch this key again to deactivate the Mute mode. This key is disabled in the private mode.
3	Change the mode to private mode. The other party’s voice emits from the cell phone. Touch this key again to deactivate the private mode.
4	End the call. This will return you to the phone (menu) screen when ending outgoing calls and the previous screen when ending incoming calls. This function is the same as pressing the on hook switch on the steering wheel.
5	Open the call (dialpad) screen. For details about how to use the function, refer to “By Dialpad” ☞5-75.
6	Switch the screen to the phone (menu) screen.
7	Allow you to make DTMF (Dual Tone Multi Frequency) calls. The numbers you enter are sent as tone signals.

NOTE

• When cell phone call is changed to hands-free call, the hands-free screen is displayed and its functions can be operated on the screen.
• Changing between cell phone call and hands-free call can be performed by operating the cell phone directly.
• Transferring methods and operations will be different depending on the type of cell phone you have.
• For the operation of the cell phone, see the manual that comes with it.
• The sound quality of the voice heard from the other party’s speaker may be negatively impacted.

■ Phone settings

You can transfer the phonebook information and adjust the volume of your phone using the Bluetooth phone system.

NOTE

• The ringer volume for outgoing and incoming calls, as well as the volume while on hold or during a call are controlled independently from the volume of the audio source. The volume setting in the phone setting is applied.
• When making a call, receiving a call or while talking on the phone, you can adjust the volume by using the power/Volume knob on the audio panel or the volume control switch on the steering wheel.

▼ Phone volume settings

The call and ringtone volume can be adjusted. A ringtone can be selected.

1. Display the “PHONE” screen. Refer to “How to change the hands-free phone system” ☞5-73.
2. Touch the key.
3. Select the desired item to be set.

• On the “PHONE” screen, the screen changes to the “Options” screen when you select the key.

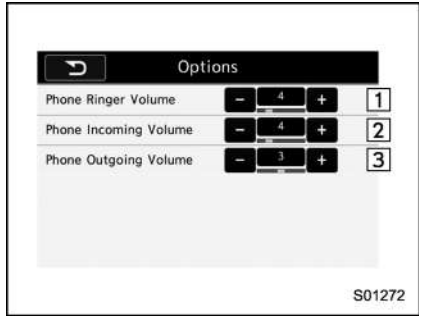

Options (volume settings) screen

No.	Function
1	Adjust the ringtone volume. The "–" key lowers the volume, and the "+" key increases the volume. (Default volume: 4 out of a total of 16 volume levels)
2	Adjust the receive volume. The "–" key lowers the volume, and the "+" key increases the volume. (Default volume: 4 out of a total of 16 volume levels)
3	Adjust the transmit volume. The "–" key lowers the volume, and the "+" key increases the volume. (Default volume: 3 out of a total of 5 volume levels)

NOTE

- **Depending on the type of phone, certain functions may not be available.**
- **Contact data is managed independently for every registered phone. When one phone is connected, another phone's registered data cannot be read.**

▼ Update contacts from phone

Operation methods differ between PBAP (Phone Book Access Profile) compatible and PBAP incompatible but OPP (Object Push Profile) compatible Bluetooth phones.

1. Display the "PHONE" screen. Refer to "How to change the hands-free phone system" ☞5-73.
2. Touch the "Contacts" key, and then select the "Download Contacts" key.

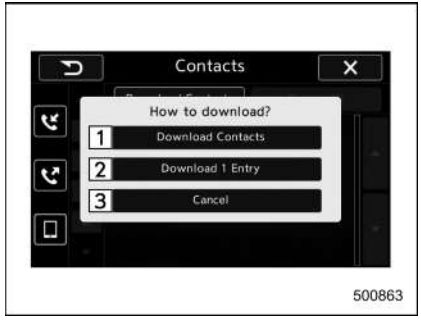

Contacts screen (Download selection)

No.	Function
1	Open the download confirmation screen. Confirm whether or not to download. If the downloaded contact (s) already exist(s), confirm whether or not to overwrite the existing data.
2	Download one set of contact data. To download the data, you need to operate from the connected device.
3	Cancel the download. The screen returns to the "Contacts" screen.

NOTE

- **If your cell phone is neither PBAP nor OPP compatible, the contacts cannot be transferred.**
- **When you are transferring the contacts data, you may have to operate the cell phone, depending on the type of cell phone.**
- **Depending on the type of cell phone, some functions may not be supported.**

▽ For PBAP compatible Bluetooth phones

1. Select the "Download Contacts" or "Download 1 Entry" key. Contacts are transferred automatically.
2. Check that a confirmation screen is displayed when the operation is complete.
   - This operation may be unnecessary depending on the type of cell phone.
   - If another Bluetooth device is connected when transferring contact data, depending on the phone, the connected Bluetooth device may need to be disconnected.

– CONTINUED –

▽ **For PBAP incompatible but OPP compatible Bluetooth phones**

1. Select the “Download 1 Entry” key.
2. Transfer the contact data to the system using a Bluetooth phone.
   - This operation may be unnecessary depending on the type of cell phone.
   - To cancel this function, select the “Cancel” key.
3. Check that a confirmation screen is displayed when the operation is complete.

NOTE

To download all items, you may need to change the settings in your cell phone beforehand.

▼ **Deleting the contact data**

You can delete the phonebook data stored in the audio set.

1. Display the “PHONE” screen. Refer to “How to change the hands-free phone system” ☞5-73.
2. Touch the “Contacts” key, and then select the “Delete All” key.
3. Select the “OK” key when the confirmation screen appears.

NOTE

- **Manual transfer operation cannot be performed while driving.**
- **If your cell phone is neither PBAP nor OPP compatible, the contacts cannot be transferred.**
- **Depending on the type of Bluetooth phone:**
  - **It may be necessary to perform additional steps on the phone when transferring contact data.**

Voice command system

The voice command system enables the audio, hands-free phone system, etc. to be operated using voice commands.

Refer to the “Command list” ☞5-84 for samples of voice commands.

Voice commands can be used even when you set the system to another language.

For details about setting language, refer to “General settings” ☞5-20.

■ Using the voice command system

▼ **Steering switch**

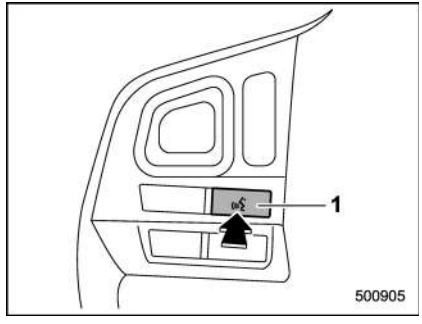

1) Talk switch

Action	Function
Press	Start the voice command system.
Press and hold	Cancel voice recognition.

▼ **Microphone**

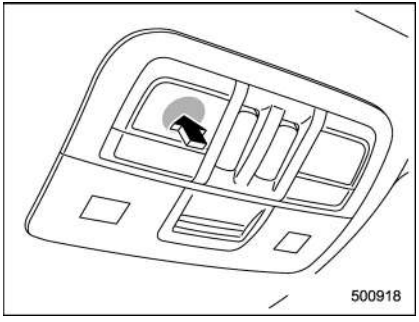

Type A

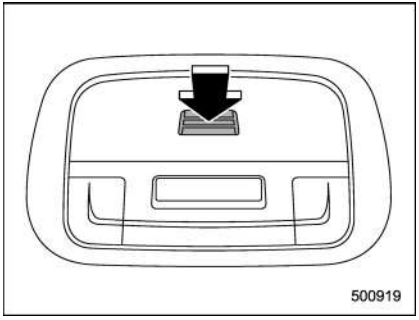

Type B

It is unnecessary to speak directly into the microphone when giving a command.

NOTE

- **Wait for the confirmation beep before speaking a command.**
- **Voice commands may not be recognized if:**
  - **– Spoken too quickly.**
  - **– Spoken at a low or high volume.**
  - **– The moonroof or windows are open.**
  - **– Passengers are talking while voice commands are spoken.**
  - **– The air conditioning speed is set high.**
  - **– The air conditioning vents are turned towards the microphone.**
- **In the following conditions, the system may not recognize the command properly and using voice commands may not be possible:**
  - **– The command is incorrect or unclear. Note that certain words, accents or speech patterns may be difficult for the system to recognize.**
  - **– There is excessive background noise, such as wind noise.**

– CONTINUED –

■ Voice command system operation

1. Press the talk switch on the steering wheel.

After the voice command top screen has been displayed, speech guidance will commence.

NOTE

When the voice command mode is audio mode, voice guidance for the voice command system can be skipped by pressing the talk switch on the steering wheel.

2. Say the command.

Example (Say "PHONE")

NOTE

- **Commands related with each function are displayed on the screen of the each function tab. Some commonly used commands are displayed on the screen of the main tab. Even if any tab is selected, all commands can be operated.**
- **Saying *"Help"* prompts guidance to offer examples of commands and operation methods.**
- **To cancel voice recognition, select "×", or press and hold the talk switch on the steering wheel.**
- **If the system does not respond or the confirmation screen does not disappear, press the talk switch on the steering wheel and try again.**
- **The notations used in the commands are as follows.**
  - **< >: Numbers, titles or names to be spoken**

▼ Voice command example: Call name

1. Press the talk switch on the steering wheel.
2. Say ***"Call <contacts>"***.
   - A confirmation screen will be displayed showing the recognition results. If multiple matching items are found, a selection screen will be displayed. Say ***"<number>"*** or select the number.

NOTE

- **In the same manner as it is displayed on the screen, "Call <contacts>", after saying *"Call a contact"* say the name of a contact. For example: *"Call a contact"*, *"John Smith"* or *"Call a contact"*, *"Mary Davis"***
- **Short or abbreviated names in the contacts list may not be recognized. Change names in the contacts list to full names.**
- **Sometimes a voice recognition result confirmation screen will be displayed. After confirming the result, say**

***"Yes"* or *"No"*.**

- **When the system recognizes multiple names from the contacts list, a name candidate list will be displayed on the screen. If the desired name is not displayed on the top of the screen, say or select the number of the name from the candidate list (number 1, number 2, etc.) to select a name from the candidate list.**
- **When a contact has multiple phone numbers registered in the contacts list, a candidate list will be displayed. If the desired phone number is not displayed on the top of the screen, say or select the number of the desired phone number from the candidate list (number 1, number 2, etc.) to select a phone number from the candidate list.**

▼ Voice command example: Dial number

1. Press the talk switch on the steering wheel.
2. Say ***"Dial number"***.
3. Say ***"Dial <number>"***.

For example, if the phone number is 2345678:
Say ***"two three four five six seven eight"***
Do not say ***"twenty three forty five sixty seven eight"***

4. Say ***"Dial"*** or press the off hook switch on the steering wheel.

NOTE

- **When the system recognizes multiple phone numbers, a phone number candidate list will be displayed on the screen. Pressing the off hook switch on the steering wheel makes a call to the top entry on the list. If the desired phone number is not displayed on the top of the screen, say the number of the desired phone number from the candidate list to select a phone number from the candidate list.**
- **Calling to the following phone numbers**
  - **3 digit numbers (911, 411, 611)**
  - **7 digit numbers (Local phone numbers)**
  - **10 digit numbers (Area code + Local phone number)**
  - **11 digit phone numbers (1 + Area code + Local phone number)**
- **As the system cannot recognize additional numbers, say the complete number without stopping.**

▼ Casual speech recognization

Due to natural language speech recognition technology, this system enables recognition of a command when spoken naturally. However, the system cannot recognize every variation of each command. In some situations, it is possible to omit the command for the procedure and directly state the desired operation. Not all voice commands are displayed in the function menu.

NOTE

If the command cannot be recognized completely, the command input screen will be displayed. (Search results will be shown based on the part of the command that was recognized.)

▽ Expression examples for each function

Command	Expression examples
"Dial <phone number>"	*Phone <phone number>.*

– CONTINUED –

■ Command list

Recognizable voice commands and their actions are shown below.

NOTE

- **Some voice commands may not be available depending on the market, vehicle specifications or the device connection status.**
- **Frequently used commands are listed in the following tables.**
- **For devices that are not installed in the vehicle, the related commands will not be displayed on the screen. Also, according to conditions, other commands may not be displayed on the screen.**
- **The functions available may vary according to the system installed.**
- **Voice recognition language can be changed. Refer to "Unit settings" ☞5-19.**
- **The notations used in the commands are as follows.**
  - **– <○○○>: Numbers, titles or names to be spoken**
  - **– (○○○): There is no need to speak the command, the voice command system will recognize the content.**

▼ Basic command

Voice command	Function
Back	Go back one hierarchy or cancel the voice recognition (voice command top screen)
Help	Ask for help with the current task
Cancel, Close	Cancel the current task
Yes	
No	
Display OFF	Turns the display off
Audio ON	Turns the audio system on
Audio OFF	Turns the audio system off
STARLINK	Switch to APPS mode

▼ Commands for changing the audio mode

Voice command	Function
Change to AM	Switch to AM mode
Change to AM1	Switch to AM mode band 1
Change to AM2	Switch to AM mode band 2
Change to FM	Switch to FM mode
Change to FM1	Switch to FM mode band 1
Change to FM2	Switch to FM mode band 2
Change to FM3	Switch to FM mode band 3
Change to SiriusXM	Switch to XM mode
Change to BT Audio	Switch to Bluetooth Audio mode
Change to CD	Switch to CD mode
Change to USB	Switch to USB mode
Change to iPod	Switch to iPod mode
Change to aha	Switch to aha radio mode
Change to Pandora	Switch to Pandora mode
Change to AUX	Switch to AUX mode

▼ Commands for hands-free phone

Voice command	Function
Dial Number → <0-9, +, *, #> → Change number, Dial	Places a call to the said phone number
Dial <0-9, +, *, #> → Change number, Dial	
Contacts, Phonebook → <Name> → <1-5> → Dial	Make a call by using the phonebook
Call <Name> → <1-5> → Dial	
Call History → Incoming call, Outgoing call → Next (page), Previous (page) → <1-5> → Dial	Make a call by using the call history
Incoming Calls	Display the call history screen
Outgoing Calls	Display the call history screen
Redial	Places a call to the phone number of the latest outgoing call
Callback	Places a call to the phone number of the latest incoming call
Select Phone → <1-5>	Display the phone select screen
Phone Menu	Display the hands free top screen

▼ Commands for Pandora

Voice command	Function
Like	Mark “Like” flag
Dislike	Mark “Dislike” flag
Skip, Next	Skip to the next song

▼ Commands for aha

Voice command	Function
Thumbs Up, Heart, Like	Mark “Like” flag
Thumbs Down, Ban, Dislike	Mark “Dislike” flag
Refresh, update	Refresh the selected station to get the latest information
Content Up	Playback next Content
Content Down	Playback previous Content

▼ Commands for AM/FM control

Voice command	Function
Seek Up	Tunes in the higher frequency direction
Seek Down	Tunes in the lower frequency direction
Scan	Switch to the scan mode
Tune to <Frequency>	Designate the frequency to switch to a specific radio station
Preset <preset number>	Designate the preset channel to switch to specific radio station
Tag	iTunes Tagging for HD Radio

– CONTINUED –

▼ Commands for SiriusXM radio control

Voice command	Function
Preset <preset number>	Designate the preset channel to switch to specific radio station
Scan	Switch to the scan mode
Channel <Channel number>	Designate the channel to switch to specific radio station
Category → Next (page), Previous (page), <1-5> → Next (page), Previous (page), <1-5>	Displays the category list screen

▼ Commands for CD control

Voice command	Function
Track Up	Select the next track
Track Down	Select the current track
Scan	Switch to the scan mode
Repeat → 1 Track Repeat, Repeat All	Select a repeat mode
1 Track Repeat	Repeat single track
Repeat All	Repeat all tracks
Shuffle	Plays randomly

▼ Commands for MP3/WMA/AAC, USB control

Voice command	Function
Track Up	Select the next track
Track Down	Select the current track
Folder Up	Plays from the start of the next folder
Folder Down	Plays from the start of the previous folder
Scan	Switch to the scan mode
Repeat → 1 Track Repeat, Repeat Folder, Repeat All	Select a repeat mode
1 Track Repeat	Repeat single track
Repeat Folder	Repeat of the folder
Repeat All	Repeat all tracks
Shuffle → Shuffle Folder, Shuffle All	Select a random play mode
Shuffle Folder	Plays randomly of the folder
Shuffle All	Plays randomly

▼ Commands for iPod Control

Voice command	Function
Track Up	Select the next track
Track Down	Select the current track
Repeat → Repeat One, Repeat All	Select a repeat mode
Repeat One	Repeat single track
Repeat All	Repeat all tracks
Shuffle → Shuffle Track, Shuffle Album, Shuffle OFF	Select a random play mode
Shuffle Track	Shuffle all tracks
Shuffle Album	Shuffle all tracks
Shuffle OFF	Turn off shuffle

▼ Commands for Bluetooth audio control

Voice command	Function
Pause	Pause play
Track Up	Select the next track
Track Down	Select the current track
Repeat → 1 track Repeat, Repeat All, Group Repeat	Select a repeat mode
1 Track Repeat	Repeat single track
Repeat All	Repeat all tracks
Group Repeat	Repeat tracks on group
Shuffle → Shuffle All, Group Shuffle, Shuffle OFF	Select a random play mode
Shuffle All	Shuffle all tracks
Group Shuffle	Shuffle tracks on group
Shuffle OFF	Turn off shuffle

What to do if...

■ Troubleshooting

If there is a problem with the hands-free system or a Bluetooth device, first check the table below.

When using the hands-free system with a Bluetooth device

Symptom	Likely cause	Solution	Page	
			Cell phone	This system
The hands-free system or Bluetooth device does not work.	The connected device may not be a compatible Bluetooth cell phone.	For USA customers, please visit www.subaru.com for details. Outside of the USA customers, contact your local dealer to arrange a demonstration in order to confirm whether or not the device can be paired with the vehicle.	*	—
	The Bluetooth version of the connected cell phone may be older than the specified version.	Use a cell phone with Bluetooth version 1.1 or higher (recommended: Ver. 2.1 + EDR or higher).	*	5-67

*: For details, refer to the owner's manual that came with the cell phone.

When registering/connecting a cell phone

Symptom	Likely cause	Solution	Page	
			Cell phone	This system
A cell phone cannot be registered.	An incorrect passcode was entered on the cell phone.	Enter the correct passcode on the cell phone.	*	—
	The registration operation has not been completed on the cell phone side.	Complete the registration operation on the cell phone (approve registration on the phone).	*	—
	Old registration information remains on either this system or the cell phone.	Delete the existing registration information from both this system and the cell phone, then register the cell phone you wish to connect to this system.	*	5-68
A Bluetooth connection cannot be made.	Another Bluetooth device is already connected.	Manually connect the cell phone you wish to use to this system.	—	5-68
	Bluetooth function is not enabled on the cell phone.	Enable the Bluetooth function on the cell phone.	*	—
	Automatic Bluetooth connection on this system is set to off.	Set automatic Bluetooth connection on this system to on when the ignition switch is turned to the “ACC” or “ON” position.	—	5-68

*: For details, refer to the owner’s manual that came with the cell phone.

– CONTINUED –

When using the phonebook

Symptom	Likely cause	Solution	Page	
			Cell phone	This system
Phonebook data cannot be transferred manually.	The profile version of the connected cell phone may not be compatible with transferring phonebook data.	For USA customers, please visit www.subaru.com for details. Outside of the USA customers, contact your local dealer to arrange a demonstration in order to confirm whether or not the device can be paired with the vehicle.	*	—
	Transfer operation on the cell phone has not completed.	Complete transfer operation on the cell phone (approve transfer operation on the phone).	*	—
Phonebook data cannot be edited.	Editing function is not available on this system.	—	—	5-78

*: For details, refer to the owner's manual that came with the cell phone.

In other situations

Symptom	Likely cause	Solution	Page	
			Cell phone	This system
Even though all conceivable measures have been taken, the symptom status does not change.	The cell phone is not close enough to this system.	Bring the cell phone closer to this system.	—	—
	The cell phone is the most likely cause of the symptom.	Turn the cell phone off, remove and reinstall the battery pack, and then restart the cell phone.	*	—
		Enable the cell phone's Bluetooth connection.	*	—
		Stop the cell phone's security software and close all applications.	*	—
		Before using an application installed on the cell phone, carefully check its source and how its operation might affect this system.	*	—

*: For details, refer to the owner's manual that came with the cell phone.

Appendix

■ Certification

- **Bluetooth**

The Bluetooth word mark and logo are registered trademarks of Bluetooth SIG, Inc. and any use of such marks by Clarion Co., Ltd. is under license.

- **SiriusXM Satellite Radio (if equipped)**

SiriusXM™ and all related marks and logos are trademarks of SiriusXM Radio Inc. All rights reserved.

- **Pandora (if equipped)**

Pandora, the Pandora logo, and other Pandora marks are trademarks or registered trademarks of Pandora Media, Inc., or its subsidiaries worldwide.

If you have any issues with the Pandora application on your mobile phone, please direct them to pandora-support@pandora.com.

- **iPod**

"Made for iPod" and "Made for iPhone" mean that an electronic accessory has been designed to connect specifically to iPod or iPhone respectively, and has been certified by the developer to meet Apple performance standards. Apple is not responsible for the operation of this device or its compliance with safety and regulatory standards. Please note that the use of this accessory with iPod or iPhone may affect wireless performance.

iPhone, iPod, iPod classic, iPod nano, iPod touch, and iTunes are trademarks of Apple Inc., registered in the U.S. and other countries.

- **How to get the source code using the open source**

This system implements software using the open source. For customers who would like to get the source code of the software, it is available by downloading it from the web site of Clarion Co., Ltd.

For details, refer to the following web site.

http://www.clarion.com/us/en/support/index.html

■ Certification for the Hands-free system

This device complies with Part 15 of FCC Rules and Industry Canada's licence-exempt RSSs. Operation is subject to the following two conditions: (1) This device may not cause harmful interference, and (2) this device must accept any interference received, including interference that may cause undesired operation.

Le présent appareil est conforme à la partie 15 des règles de la FCC et CNR d'Industrie Canada applicables aux appareils radio exempts de licence. L'exploitation est autorisée aux deux conditions suivantes : (1) l'appareil ne doit pas produire de brouillage; (2) l'utilisateur de l'appareil doit accepter tout brouillage radioélectrique subi, même si le brouillage est susceptible d'en compromettre le fonctionnement.

This equipment complies with FCC/IC radiation exposure limits set forth for an uncontrolled environment and meets the FCC radio frequency (RF) Exposure Guidelines in Supplement C to OET65 and RSS-102 of the IC radio frequency (RF) Exposure rules. This equipment has

very low levels of RF energy that it deemed to comply without maximum permissive exposure evaluation (MPE).

Cet équipement est conforme aux limites d'exposition aux rayonnements énoncées pour un environnement non contrôlé et respecte les lignes directrices d'exposition aux fréquences radioélectriques de la FCC dans le Supplément C à OET65 et d'exposition aux fréquences radioélectriques (RF) CNR-102 de l'IC. Cet équipement émet une énergie RF très faible qui est considérée conforme sans évaluation de l'exposition maximale autorisée.

FCC CAUTION

Changes or modifications not expressly approved by the party responsible for compliance could void the user's authority to operate the equipment.

This transmitter must not be co-located or operated in conjunction with any other antenna or transmitter.

■ Certification for Mexico models

- **IFETEL RCPCLPF14-253 Clarion PF-3755**
- **IFETEL RCPCLPF14-253 Clarion PF-3678**

La operación de este equipo está sujeta a las siguientes dos condiciones:
(1) es posible que este equipo o dispositivo no cause interferencia perjudicial y
(2) este equipo o dispositivo debe aceptar cualquier interferencia, incluyendo la que pueda causar su operación no deseada.

S01731

Interior lights 6-2
Dome light 6-2
Cargo area light 6-2
Map lights 6-3
OFF delay timer 6-3
Sun visors 6-4
Sun visor extension plate (models with the EyeSight system) 6-4
Vanity mirror 6-5
Storage compartment 6-5
Glove box 6-6
Center console 6-6
Cup holders 6-7
Bottle holders 6-7
Accessory power outlets 6-8
Use with a cigarette lighter (dealer option) 6-9
Ashtray (dealer option) 6-10
Floor mat (if equipped) 6-11
Coat hook 6-11
Shopping bag hook 6-12
Cargo area cover (if equipped) 6-12
Using the cover 6-12
To remove the cover housing 6-13
Stowage of the cargo area cover 6-13
To install the cover housing 6-14
Cargo tie-down hooks (if equipped) 6-14
Rear view camera 6-15
How to use the rear view camera 6-16
Viewing range on the screen 6-17
Help line 6-18

Interior lights

⚠ CAUTION

When leaving your vehicle, make sure the lights are turned off to avoid battery discharge.

■ Dome light

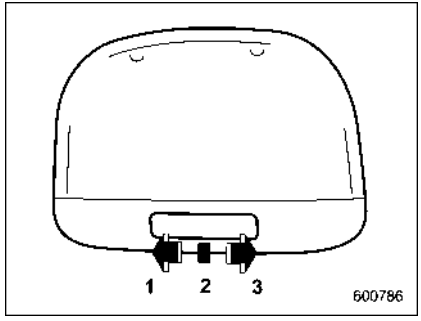

1) ON
2) DOOR
3) OFF

The dome light switch has the following positions.

ON: The light remains on continuously.

OFF: The light remains off.

DOOR: The dome light illuminates automatically in the following cases.

- Any of the doors or the rear gate is opened.
- The doors or the rear gate are unlocked using the keyless access function (if equipped). Refer to “Locking and unlocking with “keyless access” entry function” ☞2-13.
- The doors or the rear gate are unlocked using the remote keyless entry transmitter.
- The ignition switch is turned from the “ACC” position to the “LOCK”/“OFF” position.

■ Cargo area light

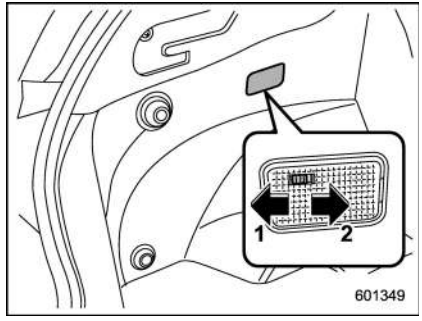

1) DOOR
2) OFF

DOOR: The light illuminates when the rear gate is opened. The light remains illuminated for several seconds and gradually turns off after the rear gate is closed.

OFF: The light remains off.

■ Map lights

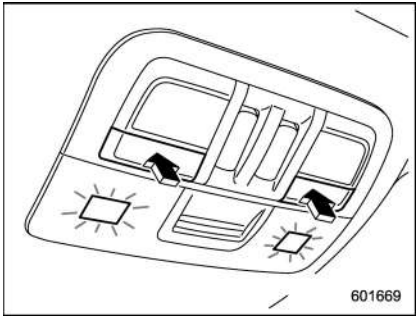

Type A

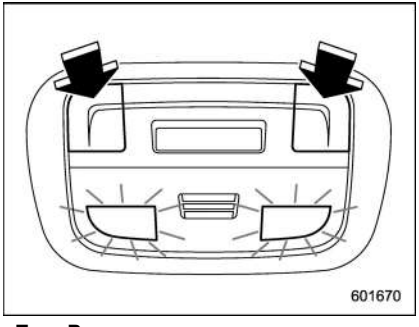

Type B

To turn on the map light, push the switch. To turn it off, push the switch again.

NOTE

For the type A map lights, although the light switches are in the ON position, the lights are automatically turned off after approximately 30 seconds of illumination to prevent the vehicle battery from discharging. For details, refer to "Battery drainage prevention function" ☞2-7.

▼ Automatic illumination (models with moonroof)

The map lights illuminate automatically in the following cases.

- Any of the doors other than the rear gate is opened. (The map lights do not illuminate when only the rear gate is opened.)
- The doors are unlocked using the keyless access function (if equipped). Refer to "Locking and unlocking with "keyless access" entry function" ☞2-13.
- The doors are unlocked using the remote keyless entry system. Refer to "Remote keyless entry system" ☞2-22.
- The ignition switch is turned from the "ACC" position to the "LOCK"/"OFF" position.

■ OFF delay timer

The following lights have an automatic illumination function.

- dome light
- map light (type A)
- cargo area light

After being illuminated automatically, these lights remain on for several seconds and then gradually turn off under the following conditions.

- after all doors and the rear gate are closed (dome light)
- after all doors are closed (type A map light)
- after the rear gate is closed (cargo area light)

While the lights are illuminated, if any of the following operations are performed, the lights turn off immediately.

- The ignition switch is turned from the "LOCK"/"OFF" position to the "ACC" or "ON" position.
- All doors and the rear gate are locked using the keyless access function (if equipped).
- All doors and the rear gate are locked using the remote keyless entry system.

The setting for the period of time in which the lights remain on (OFF delay timer) can

– CONTINUED –

be changed by a SUBARU dealer. Contact your SUBARU dealer for details. For models with multi function display, the setting can be changed by operating the multi function display. For details, refer to “Interior light off delay timer setting” ☞3-81.

Sun visors

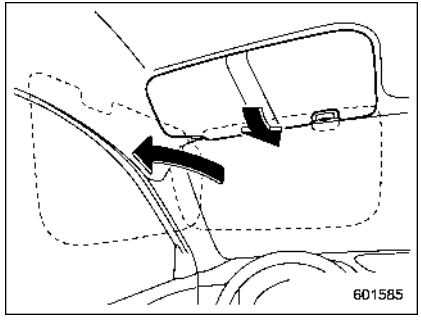

To block out glare, swing down the visors. To use the sun visor at a side window, swing it down and move it sideways.

■ Sun visor extension plate (models with the EyeSight system)

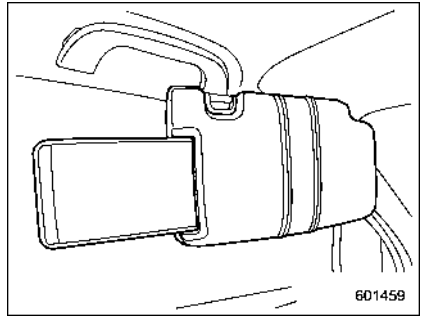

With the sun visor positioned over the side window, you can use the sun visor extension plate to prevent glare through the gap between the sun visor and center pillar. To use the extension plate, pull it toward the rear of the vehicle. When you have finished using it, stow it by pushing it toward the front of the vehicle.

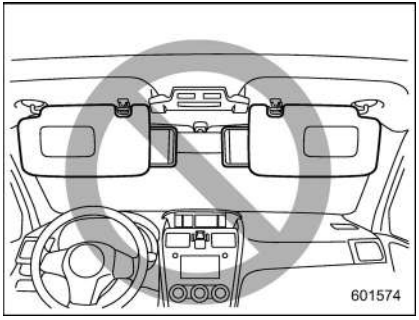

CAUTION

Do not pull out the extension plate with the sun visor positioned over the windshield. The extension plate would obstruct your view of the rearview mirror.

■ Vanity mirror

CAUTION

Keep the vanity mirror cover closed while the car is being driven to avoid being temporarily blinded by the glare of bright light.

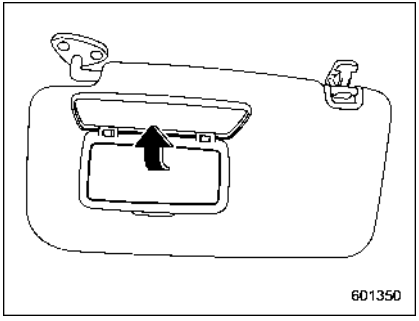

To use the vanity mirror, swing down the sun visor and open the vanity mirror cover.

Storage compartment

CAUTION

- **Always keep the storage compartment closed while driving to reduce the risk of injury in the event of a sudden stop or an accident.**
- **Do not store spray cans, containers with flammable or corrosive liquids or any other dangerous items in the storage compartment.**

– CONTINUED –

■ Glove box

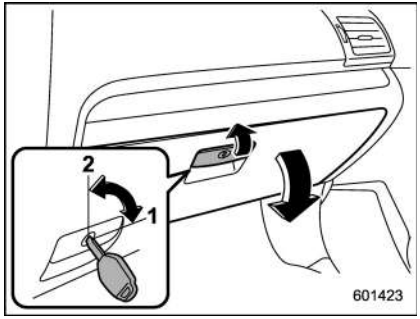

1) Lock
2) Unlock

To open the glove box, pull the handle. To close it, push the lid firmly upward.

To lock the glove box, insert the key and turn it clockwise. To unlock the glove box, insert the key and turn it counterclockwise.

For models with “keyless access with push-button start system”, use the mechanical key to lock or unlock the glove box.

NOTE

The mechanical key is directional. If the key cannot be inserted, change the direction that the grooved side is facing and insert it again.

■ Center console

The center console box provides a storage space.

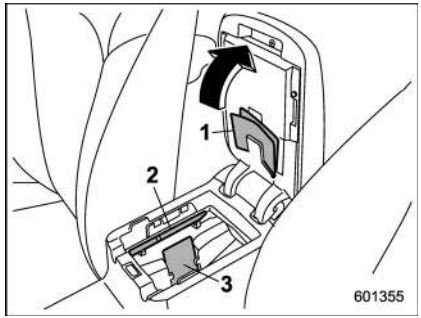

1) Paper holder
2) Pen holder
3) Card holder

The top of the console can be used as an armrest.

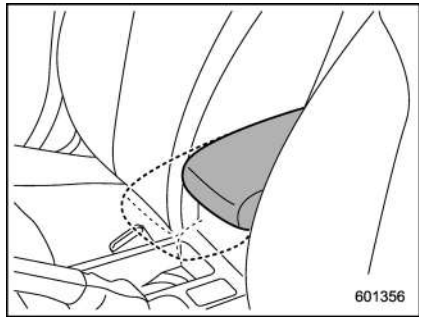

For some models, the armrest is adjustable. Slide the armrest to the desired position.

Cup holders

CAUTION

- **Do not pick up a cup from the cup holder or put a cup in the holder while you are driving, as this may distract you and lead to an accident.**
- **Take care to avoid spills. Beverages, if hot, might scald you and/or your passengers. Spilled beverages may also damage upholstery or carpets.**
- **When a cup in the rear passenger's cup holder contains a beverage, do not fold down the rear seatback. Otherwise, the beverage could spill and, if the beverage is hot, it could scald you and/or your passengers.**

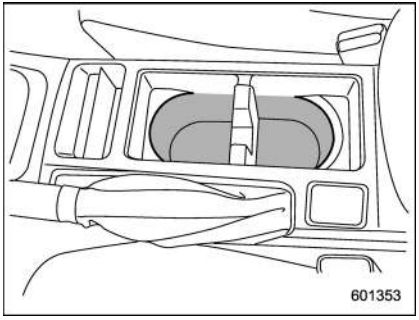

Front passenger's cup holder

A dual cup holder is built into the center console.

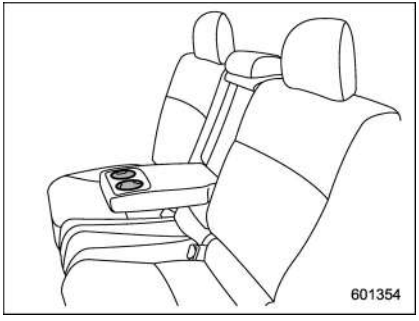

Rear passenger's cup holder (if equipped)

A dual cup holder is built into the armrest.

Bottle holders

CAUTION

- **Do not pick up a bottle from the bottle holder or put a bottle in the holder while you are driving, as this may distract you and lead to an accident.**
- **When placing a beverage in a bottle holder, make sure it is capped. Otherwise, the beverage could spill when opening/closing the door or while driving and, if the beverage is hot, it could scald you and/or your passengers.**

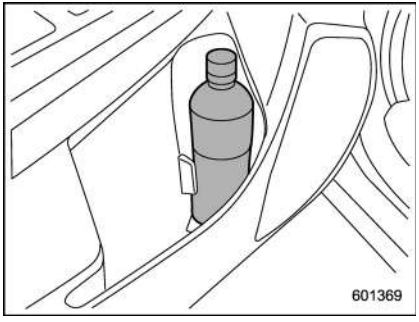

The bottle holder equipped on each door

– CONTINUED –

trim can be used to hold beverage bottles and other items.

Accessory power outlets

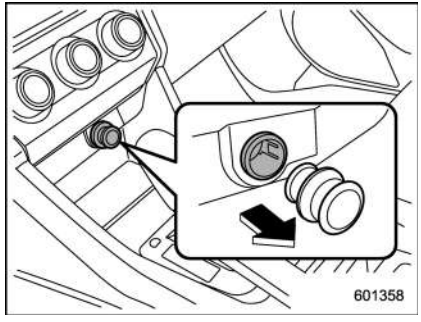

Power outlet below the climate control dials

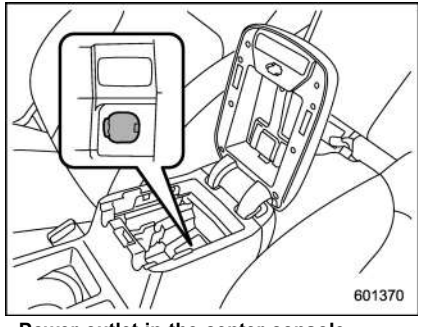

Power outlet in the center console

Accessory power outlets are provided below the climate control dials and in the center console. Electrical power (12V DC) from the battery is available at any of the outlets when the ignition switch is in either the “ACC” or “ON” position.

You can use an in-vehicle electrical appliance by connecting it to an outlet.

The maximum power rating of an appliance that can be connected is **120W**. Do not use an appliance which exceeds the indicated wattage for each outlet.

When using appliances connected to two outlets simultaneously, the total power consumed by them must not exceed 120W.

CAUTION

- **Do not attempt to use a cigarette lighter in the accessory power outlets.**
- **Do not place any foreign objects, especially metal ones such as coins or aluminum foil, into the accessory power outlet. That could cause a short circuit. Always put the cap on the accessory power outlet when it is not in use.**
- **Use only electrical appliances which are designed for 12V DC.**

  The maximum power rating of an

appliance that can be connected is 120W. Do not use an appliance which exceeds the indicated wattage for each outlet.

When using appliances connected to two outlets simultaneously, the total power consumed by them must not exceed 120W. Overloading the accessory power outlet can cause a short circuit. Do not use double adapters or more than one electrical appliance.

- **If the plug on your electric appliance is either too loose or too tight for the accessory power outlet, this can result in a poor contact or cause the plug to get stuck. Only use plugs that fit properly.**
- **Use of an electric appliance in the accessory power outlet for a long period of time while the engine is not running can cause battery discharge.**
- **Before driving your vehicle, make sure that the plug and the cord on your electrical appliance will not interfere with your shifting gears and operating the accelerator and brake pedals. If they do, do not use the electrical appliance while driving.**

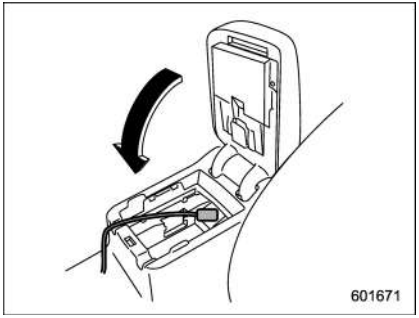

NOTE

When the lid of the center console is closed, an opening remains between the center console and the lid to allow the power outlet in the center console to be used. Pass the cord of the electrical appliance through this opening.

■ Use with a cigarette lighter (dealer option)

To use the accessory power outlet as a cigarette lighter socket, purchase the cigarette lighter plug, which is an optional accessory. A cigarette lighter plug is available from your SUBARU dealer.

The cigarette lighter operates only when the ignition switch is in the “ON” or “ACC” position.

To use the cigarette lighter, push in the knob and wait a few moments. It will automatically spring up when ready for use.

⚠ WARNING

To avoid being burned, never grasp the lighter by the end with the heating element. Doing so could result in injury and could also damage the heating element.

⚠ CAUTION

- **Do not hold the lighter pushed in, because it will overheat.**
- **The electrical power socket is originally designed to use a genuine SUBARU cigarette lighter plug. Do not use a non-genuine cigarette lighter plug in the socket. Doing so may cause a short-circuit and overheating, resulting in a fire.**
- **If the socket is ever used for a plug-in accessory such as a cell**

– CONTINUED –

phone, that may damage the portion of the socket's internal mechanism that causes a cigarette lighter plug to "pop out" after its lighter element is heated. Therefore, do not place a cigarette lighter plug in a socket that has been used, even once, to power a plug-in accessory. Doing so may cause the plug to stick and overheat, creating a potential fire hazard.

Ashtray (dealer option)

CAUTION

Observe the following precautions. Not doing so could result in a fire.

- **Always extinguish matches and cigarettes before putting them into the ashtray, and then close the ashtray securely.**
- **Do not put flammable material in the ashtray.**
- **Do not leave a lighted cigarette in the ashtray.**
- **Do not leave a lot of cigarette butts in the ashtray.**

NOTE

Particles of ash and tobacco will accumulate around the hinges of the ashtray's inner lid. Clean them off using a toothbrush or a similar narrow-ended implement.

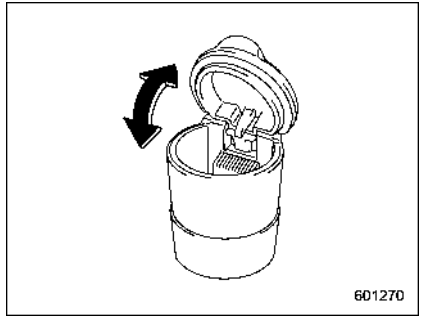

The portable ashtray can be installed in each cup holder or bottle holder. For the locations of the cup holders, refer to "Cup holders" ☞6-7. For the locations of the bottle holders, refer to "Bottle holders" ☞6-7.

When using the ashtray, open the lid of the ashtray. Fully close the lid after using the ashtray to help reduce residual smoke.

Floor mat (if equipped)

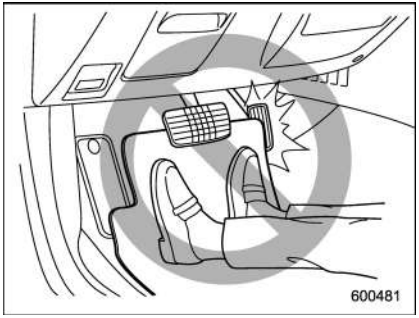

CAUTION

If the floor mat slips forward and interferes with the movement of the pedals during driving, it could cause an accident. Observe the following precautions to prevent the floor mat from slipping forward.

- **Be sure to use a genuine SUBARU floor mat or an equivalent designed with grommets in the correct locations.**
- **Make sure that the driver's floor mat is placed in its proper location and is correctly secured on its retaining pins.**
- **Do not use more than one floor mat.**

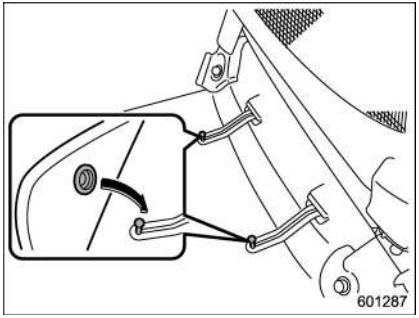

Retaining pins are located on the driver's side floor.

The floor mat should be properly secured using the built-in grommets, by placing the grommets over the pins and pushing them downward.

Coat hook

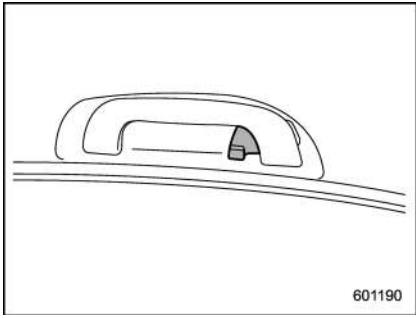

A coat hook is attached to the rear passenger's hand grip.

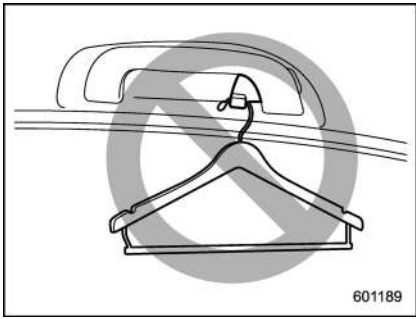

– CONTINUED –

WARNING

Obey the following instructions.

- **Do not hang coat hangers or other hard or pointed objects on the coat hooks. Hang clothing directly on the coat hooks without using hangers.**
- **Before hanging clothing on the coat hooks, make sure there are no pointed objects in the pockets.**

If these instructions are ignored, the following may occur in sudden stops or in a collision, causing serious injuries.

- **Items may be thrown through the cabin.**
- **SRS curtain airbags may be prevented from deploying properly.**

CAUTION

Never hang anything on the coat hook that might obstruct the driver's view or that could cause injury in sudden stops or in a collision.

Shopping bag hook

CAUTION

Do not hang items on the shopping bag hook that weigh 6 lbs (3 kg) or more.

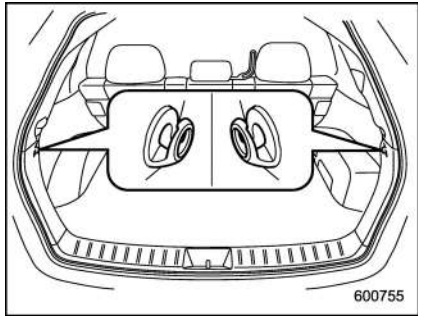

A shopping bag hook is attached to each side of the cargo area.

Cargo area cover (if equipped)

The cargo area cover is provided for covering the cargo area and to protect its contents from direct sunlight. This cover is detachable to make room for additional cargo.

■ Using the cover

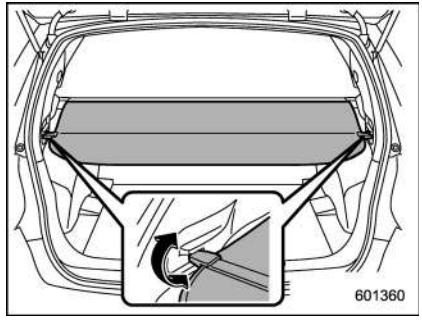

To extend the cover, pull the end of the cover out of the housing, then insert its hooks into the catches as shown. To rewind it, unhook it from the catches and it will rewind automatically. You should hold on to the cover and guide it back into the cover housing while it is rewinding.

WARNING

Do not place anything on the extended cover. Putting excessive weight on the extended cover can break it and an object on the cover could tumble forward in the event of a sudden stop or collision. This could cause serious injury.

CAUTION

Be careful not to scratch the rear gate stays while extending and rewinding the cover.

Scratches on the stays could cause leakage of gas from the stays, which may result in their inability to hold the rear gate open.

■ To remove the cover housing

1. Rewind the cover.

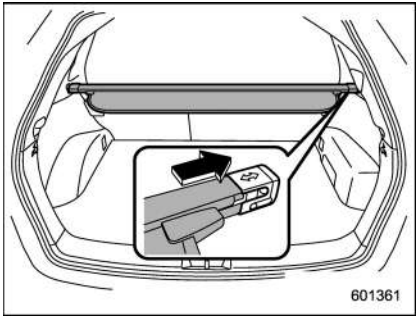

2. Push the cover housing to the right side and shorten it.
3. Take it off the retainer.

■ Stowage of the cargo area cover

The cargo area cover can be stowed in under the cargo floor.

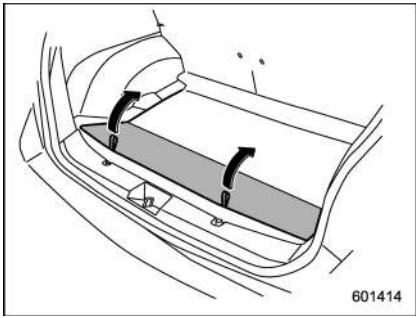

1. Raise and fold the rear end of the cargo floor board.

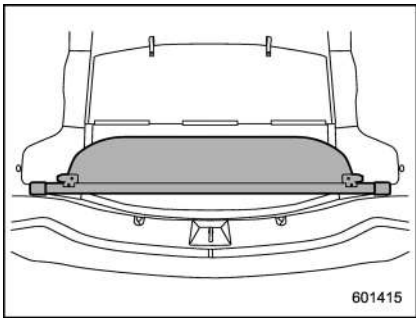

– CONTINUED –

2. Stow the cover housing in the cargo area end.

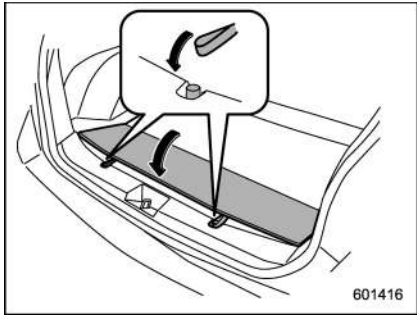

3. Put the cargo floor board back while hanging two retaining straps on the hooks that are located on the rear wall of cargo area.

■ To install the cover housing

1. Shorten the cover housing.

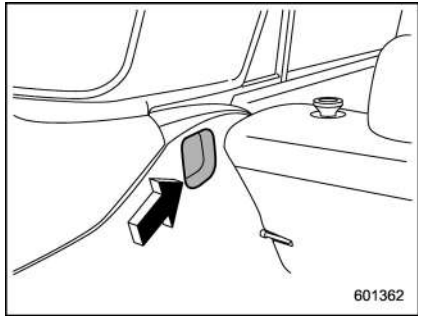

2. Insert both ends of the cover housing into the recesses of the retainers.

Cargo tie-down hooks (if equipped)

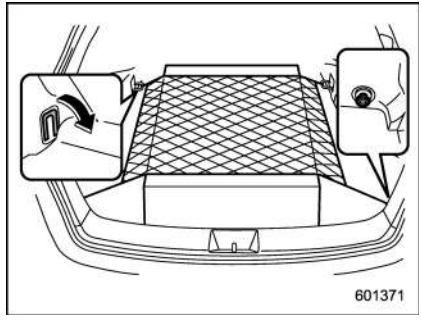

The cargo area is equipped with two or four tie-down hooks so that cargo can be secured with a cargo net or ropes.

When using the front tie-down hooks, turn them down out of the storing recesses.

⚠ CAUTION

The cargo tie-down hooks are designed only for securing light cargo. Never try to secure cargo that exceeds the capacity of the hooks. The maximum load capacity is 22 lbs (10 kg) per hook.

Rear view camera

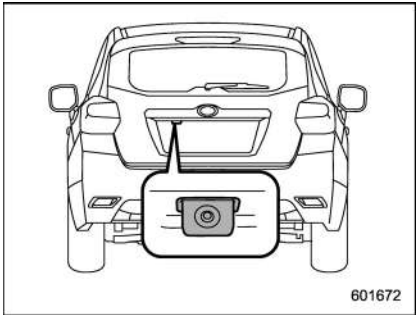

A rear view camera is attached to the rear gate. When the ignition switch is “ON” and the shift lever (MT models) or select lever (CVT models) is set to “R”, the rear view camera automatically displays the rear view image behind the vehicle on one of the following displays.

- Navigation display (if equipped)
- Audio display (if equipped)

WARNING

- **Since the rear view camera uses a wide-angle lens, the image on the monitor is different from the actual view in terms of distance.**
- **Since the range of the image on the monitor is limited, you should always check the rear view and the surrounding area with your eyes and mirrors, and move backward at a slow speed. Moving backward only by checking the rear view image from the camera could cause an accident.**
- **Do not disassemble or modify the camera, switch or wiring. If smoke comes out or you smell a strange odor, stop using the rear view camera immediately. Contact your SUBARU dealer for an inspection. Continued use may result in accident, fire or electric shock.**

CAUTION

- **If your vehicle is washed with a high-pressure washer, do not allow water to contact the camera directly. Entry of water in the camera lens may result in condensation, malfunction, fire or electric shock.**
- **Since the camera is a precision device, do not subject it to strong impacts. Otherwise, malfunction, fire or electric shock may occur.**
- **If mud or snow sticks to or is frozen on the camera, you must be very careful when removing it. Otherwise, damage to the camera may cause a fire or electric shock. Pour water or lukewarm water over the camera to remove mud and ice, and wipe it with a soft, dry cloth.**
- **Do not put a flame close to the camera or wiring. Otherwise, damage or fire may occur.**
- **When replacing the fuse, be sure to use a fuse with the specified rating. Use of a fuse with a different rating may result in a malfunction.**
- **If the rear view camera is used for a long time while the engine is not operated, the battery may become completely discharged.**

NOTE

- **Do not wipe the camera with alcohol, benzine or paint thinner. Otherwise, discoloration may occur. To remove contamination, wipe the camera with a cloth moistened with a diluted neutral detergent and then wipe it with a soft, dry cloth.**
- **When waxing the vehicle, be careful**

– CONTINUED –

not to apply the wax to the camera. If it comes in contact with the camera, moisten a clean cloth with a diluted neutral detergent to remove the wax.

● The camera lens has a hard coating to help prevent scratches. However, when washing the vehicle or cleaning the camera lens, be careful not to scratch the camera lens. Do not use a washing brush directly on the camera lens. The image quality of the rear view camera may deteriorate.

● Strong light shined on the camera lens may develop vertical lines around the light source. This is not a malfunction.

● Under fluorescent light, the display may flicker. However, this is not a malfunction.

● The image of the rear view camera may be slightly different from the actual color of the objects.

■ How to use the rear view camera

When the shift lever/select lever is set to “R”, the rear view camera automatically displays the rear view image from the vehicle. When the lever is set to other positions, the image before setting to “R” is displayed.

1. Set the ignition switch to “ON”.
2. Set the shift lever/select lever to “R”.

NOTE

● For models with the genuine SUBARU navigation system or audio system, while the navigation system is activated, the image of the rear view camera will not be displayed. However, the image of the rear view camera has priority over other screen displays.

● The image of the rear view camera is horizontally reversed as is the case with the vehicle rearview mirror or the side view mirror.

● It may be difficult to see the rear view camera image in the following cases. This is not a malfunction of the camera.

– The vehicle is used for towing or a trailer hitch is installed.

– The vehicle is in a dark place (at night, in a tunnel, etc.).

– The vehicle is in an extremely hot or cold place.

– An object (such as raindrops, snow, dirt, etc.) that disturbs the view of the rear view camera sticks to the lens of the camera.

– Strong light shined directly on the camera lens (occasionally, there are vertical lines on the screen).

■ Viewing range on the screen

⚠ CAUTION

The range that can be viewed with the rear view camera is limited. Always be sure to check with your eyes when moving backward and proceed slowly.

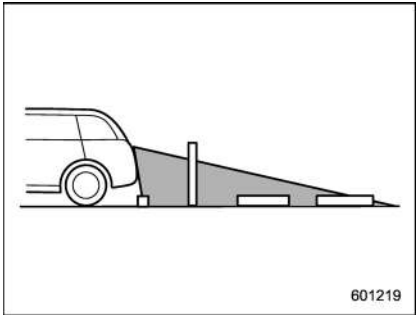

Range of view

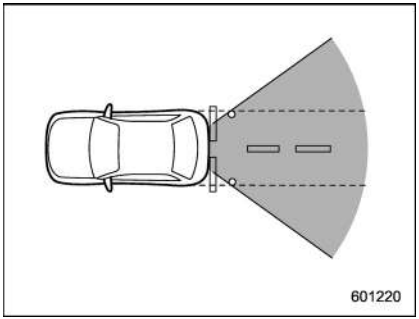

Range of view

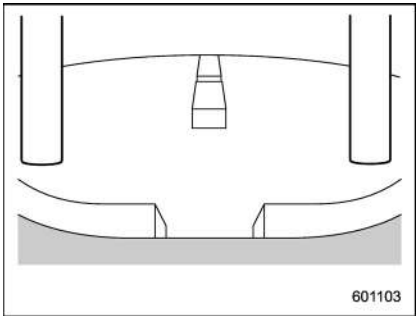

Image from camera

The area from the rear end of the bumper can be viewed. Areas at both ends of the bumper and areas just under the bumper cannot be viewed.

Also, the image from the rear view camera looks shorter than the actual distance.

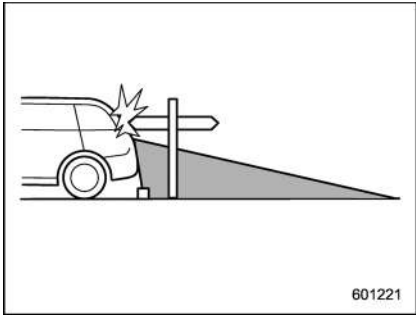

Range of view

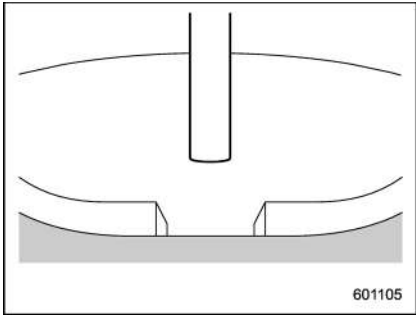

Image from camera

The area above the camera cannot be viewed. If there is an object that has a

– CONTINUED –

wide projection on its upper part such as a sign pole behind the vehicle, the projection cannot be seen on the screen.

■ Help line

The help line (distance marker and vehicle width line) is a guide to help you realize the actual distance from the screen image.

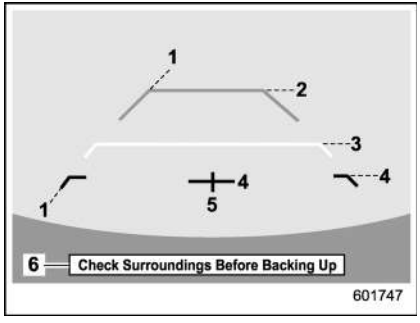

1) Vehicle width line (oblique vertical line)
2) Approx. 10 feet (3 m) from the bumper (green horizontal line)
3) Approx. 3 feet (1 m) from the bumper (yellow horizontal line)
4) Approx. 1.5 feet (0.5 m) from the bumper (red horizontal line)
5) Vehicle centerline
6) Warning message

When the shift lever/select lever is set to position “R”, the monitor screen displays the help lines together with the rear view image.

⚠ CAUTION

- **When moving backward, always check the back with your eyes without relying on the help lines.**
- **The actual position may be different from the indication of the help lines.**
- **Differences may occur due to number of passengers or loaded cargo.**
- **When the vehicle is on a slope or when the vehicle is inclined against the road, the indication is different from the actual position.**
- **Be sure to observe the displayed warning message.**

NOTE

If you shift to the “R” range shortly after turning on the ignition switch, the warning message “Check Surroundings Before Backing Up” may not be displayed. Wait for several seconds or more after turning on the ignition switch before shifting to the “R” range. Then the warning message will be displayed.

▼ Difference between screen image and actual road

The distance markers show the distance for a level road when the vehicle is not loaded. It may be different from the actual distance depending on the loading conditions or road conditions.

▽ **When there is an upward slope at the back**

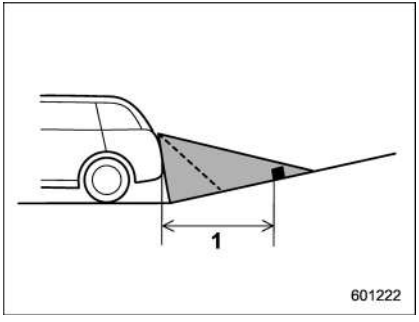

1) 3 feet (1 m)

The distance on the screen looks farther than the actual distance.

▽ **When there is a downward slope at the back**

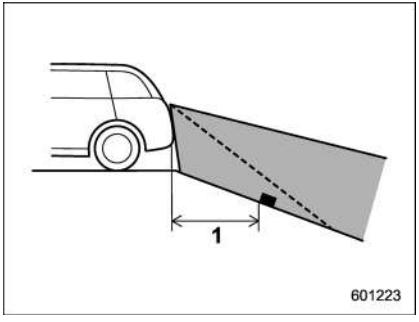

1) 3 feet (1 m)

The distance on the screen looks nearer than the actual distance.

NOTE

When cargo is loaded, the rear view distance on the screen looks farther than the actual distance as in an upward slope.

▼ **Feature of distance marker**

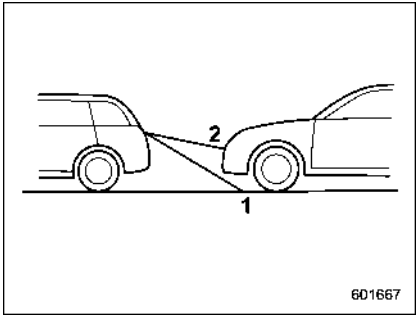

1) 3 feet (1 m) line
2) 10 feet (3 m) line

The distance marker shows the distance on the road. If there is a car or other object close behind, distance cannot be correctly displayed.

Fuel 7-3
Fuel requirements 7-3
Fuel filler lid and cap..... 7-4
State emission testing (U.S. only)..... 7-7
Preparing to drive 7-8
Starting and stopping the engine (models without push-button start system)..... 7-9
General precautions when starting/stopping engine 7-9
Starting engine..... 7-9
Stopping the engine 7-11
Starting and stopping engine (models with push-button start system) 7-11
Safety precautions 7-11
Operating range for push-button start system..... 7-11
Starting engine..... 7-11
Stopping engine..... 7-13
When access key does not operate properly..... 7-13
Remote engine start system (dealer option)..... 7-14
Models with “keyless access with push-button start system” 7-14
Models without “keyless access with push-button start system” 7-15
Entering the vehicle while it is running via remote start..... 7-19
Entering the vehicle following remote engine start shutdown..... 7-19
Pre-heating or pre-cooling the interior of the vehicle 7-19
Service mode (models without “keyless access with push-button start system”) 7-19
Remote transmitter program (models without “keyless access with push-button start system”)..... 7-19
System maintenance..... 7-20
Manual transmission 7-22
Shifting speeds..... 7-22
Driving tips..... 7-23
Continuously variable transmission..... 7-23
Continuously variable transmission features 7-24
Select lever 7-24
Selection of manual mode..... 7-26
Shift lock function 7-28
Driving tips..... 7-29
Power steering..... 7-29
Power steering warning light..... 7-29
Power steering system features 7-30
Braking 7-30
Braking tips..... 7-30
Brake system 7-31
Disc brake pad wear warning indicators 7-31
ABS (Anti-lock Brake System)..... 7-32
ABS self-check 7-32
ABS warning light..... 7-32
Electronic Brake Force Distribution (EBD) system 7-33
Steps to take if EBD system malfunctions 7-33
Vehicle Dynamics Control system..... 7-34
Safety precautions..... 7-34
System features..... 7-35

Vehicle Dynamics Control system monitor 7-36
Vehicle Dynamics Control OFF switch..... 7-36
Tire pressure monitoring system (TPMS) (U.S.-spec. models) 7-37
Parking your vehicle 7-39
Parking brake..... 7-39
Parking tips 7-39
Hill start assist system 7-41
To activate/deactivate the Hill start assist system..... 7-42
Hill start assist warning light/Hill start assist OFF indicator light..... 7-44
Cruise control (if equipped)..... 7-44
To set cruise control 7-44
To temporarily cancel the cruise control..... 7-45
To turn off the cruise control..... 7-46
To change the cruising speed 7-46
Cruise control indicator light..... 7-48
Cruise control set indicator light 7-48
BSD/RCTA (if equipped) 7-48
System features..... 7-49
System operation..... 7-51
BSD/RCTA approach indicator light/warning buzzer 7-52
BSD/RCTA warning indicator..... 7-54
BSD/RCTA OFF switch 7-55
Certification for the BSD/RCTA..... 7-55
Handling of radar sensors..... 7-56

Fuel

CAUTION

Use of a fuel which is low in quality or use of an inappropriate fuel additive may cause damage to the engine and/or fuel system.

■ Fuel requirements

The engine is designed to operate using **unleaded gasoline** with an octane rating of **87 AKI (90 RON) or higher**.

▼ Fuel octane rating

Using a gasoline with a lower octane rating can cause persistent and heavy knocking, which can damage the engine. Do not be concerned if your vehicle sometimes knocks lightly when you drive up a hill or when you accelerate. Contact your SUBARU dealer if you use a fuel with the specified octane rating and your vehicle knocks heavily or persistently.

▽ RON

This octane rating is the Research Octane Number.

▽ AKI

This octane rating is the average of the Research Octane and Motor Octane numbers and is commonly referred to as the Anti Knock Index (AKI).

▼ Unleaded gasoline

The neck of the fuel filler pipe is designed to accept only an unleaded gasoline filler nozzle. Under no circumstances should leaded gasoline be used because it will damage the emission control system and may impair driveability and fuel economy.

▼ Gasoline for California-certified LEV

If your vehicle was certified to California's low emission vehicle (LEV) standards as indicated on the underhood tune-up label, it is designed to optimize engine and emission performance with gasoline that meets the clean burning low-sulfur California gasoline specifications. If you live in any other state than California, your vehicle will operate on gasoline meeting Federal specifications. Gasoline sold outside California is permitted to have higher sulfur levels, which may affect the performance of your vehicle's catalytic converter and may produce a sulfur exhaust odor or smell. SUBARU recommends that you try a different brand of unleaded gasoline having lower sulfur to determine if the problem is fuel related before returning your vehicle to an authorized dealer for service.

▼ MMT

Some gasoline contains an octane-enhancing additive called MMT (Methylcyclopentadienyl Manganese Tricarbonyl). If you use such fuels, your emission control system performance may deteriorate and the CHECK ENGINE warning light/Malfunction indicator light may turn on. If this happens, return to your authorized SUBARU Dealer for service. If it is determined that the condition is caused by the type of fuel used, repairs may not be covered by your warranty.

▼ Gasoline for cleaner air

Your use of gasoline with detergent additives will help prevent deposits from forming in your engine and fuel system. This helps keep your engine in tune and your emission control system working properly, and is a way of doing your part for cleaner air. If you continuously use a high quality fuel with the proper detergent and other additives, you should never need to add any fuel system cleaning agents to your fuel tank.

Many gasolines are now blended with materials called oxygenates. Use of these fuels can also help keep the air cleaner.

– CONTINUED –

Oxygenated blend fuels, such as MTBE (Methyl Tertiary Butyl ether) or ethanol (ethyl or grain alcohol) may be used in your vehicle, but should contain no more than 15% MTBE or 10% ethanol for the proper operation of your SUBARU.

Do not use any gasoline that contains more than 10% ethanol, including from any pump labeled E15, E30, E50 or E85 (which are only some examples of fuel containing more than 10% ethanol).

In addition, some gasoline suppliers are now producing reformulated gasolines, which are designed to reduce vehicle emissions. SUBARU approves the use of reformulated gasoline.

If you are not sure what the fuel contains, you should ask your service station operators if their gasolines contain detergents and oxygenates and if they have been reformulated to reduce vehicle emissions.

As additional guidance, only use fuels suited for your vehicle as explained in the following description.

- Fuel should be unleaded and have an octane rating no lower than that specified in this manual.
- Methanol (methyl or wood alcohol) is sometimes mixed with unleaded gasoline. Methanol can be used in your vehicle **ONLY** if it does not exceed 5% of the fuel mixture **AND** if it is accompanied by sufficient quantities of the proper cosolvents and corrosion inhibitors required to prevent damage to the fuel system. Do not use fuel containing methanol **EXCEPT** under these conditions.
- If undesirable driveability problems are experienced and you suspect they may be fuel related, try a different brand of gasoline before seeking service at your SUBARU dealer.
- Fuel system damage or driveability problems which result from the use of improper fuel are not covered under the SUBARU Limited Warranty.

⚠ CAUTION

Do not let fuel spill on the exterior surfaces of the vehicle. Because fuel may damage the paint, be sure to wipe off any spilled fuel quickly. Paint damage caused by spilled fuel is not covered under the SUBARU Limited Warranty.

■ Fuel filler lid and cap

▼ Locations of the fuel filler lid and the lid release lever

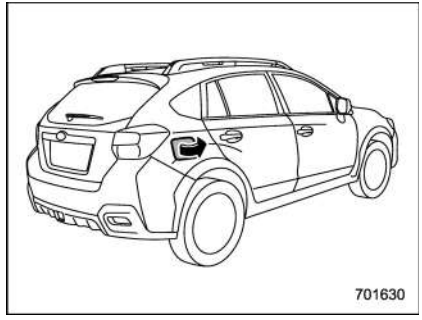

Fuel filler lid

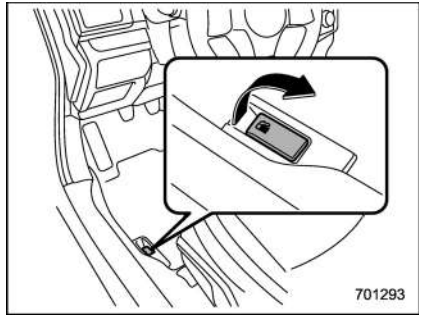

Fuel filler lid release lever

▼ Refueling

Only one person should be involved in refueling. Do not allow others to approach the area of the vehicle near the fuel filler pipe while refueling is in progress.

Be sure to observe any other precautions that are posted at the service station.

1. Stop the vehicle and turn the ignition switch to the “LOCK”/“OFF” position and turn off all the other electrical components.
2. To open the fuel filler lid, pull the lid release lever up. The lever is on the floor at the left of the driver’s seat.

⚠ WARNING

Before opening the fuel filler cap, first touch the vehicle body or a metal portion of the fuel pump or similar object to discharge any static electricity that may be present on your body. If your body is carrying an electrostatic charge, there is a possibility that an electric spark could ignite the fuel, which could burn you. To avoid acquiring a new static electric charge, do not get back into the vehicle while refueling is in progress.

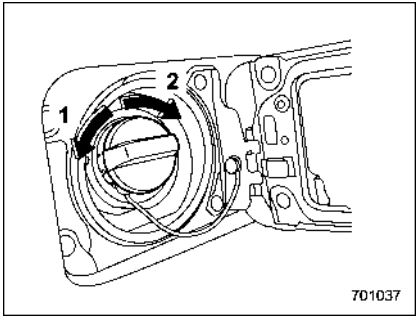

1) Open
2) Close

3. Remove the fuel filler cap by turning it slowly counterclockwise.

⚠ WARNING

- **Gasoline vapor is highly flammable. Before refueling, always turn the ignition switch to the “LOCK”/“OFF” position first and then close all vehicle doors and windows. Make sure that there are no lighted cigarettes, open flames or electrical sparks in the adjacent area. Only handle fuel outdoors. Quickly wipe up any spilled fuel.**
- **When opening the cap, grasp it firmly and turn it slowly to the left. Do not remove the cap quickly. Fuel may be under pressure and spray out of the fuel filler neck, especially in hot weather. If you hear a hissing sound while you are removing the cap, wait for the sound to stop and then slowly open the cap to prevent fuel from spraying out and creating a fire hazard.**

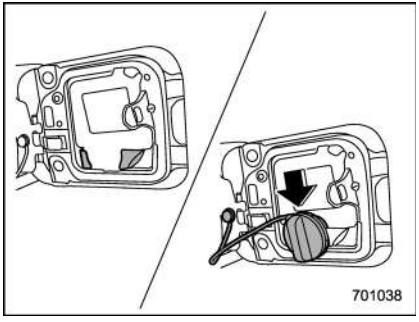

4. Set the fuel filler cap on the cap holder inside the fuel filler lid.

⚠ WARNING

- **When refueling, insert the fuel nozzle securely into the fuel filler pipe. If the nozzle is lifted or not**

– CONTINUED –

fully inserted, its automatic stopping mechanism may not function, causing fuel to overflow the tank and creating a fire hazard.

- **Stop refueling when the automatic stop mechanism on the fuel nozzle activates. If you continue to add fuel, temperature changes or other conditions may cause fuel to overflow from the tank and create a fire hazard.**

5. Stop filling the tank after the fuel filler pump automatically stops. Do not add any more fuel.
6. Put the cap back on, turn it clockwise until you hear a clicking noise. Be certain not to catch the tether under the cap while tightening.

CAUTION

Make sure that the cap is tightened until it clicks to prevent fuel spillage in the event of an accident.

7. Close the fuel filler lid completely.

CAUTION

If you spill any fuel on the painted surface, rinse it off immediately. Otherwise, the painted surface could be damaged.

NOTE

- **You will see the "⛽▶" sign in the fuel gauge. This indicates that the fuel filler door (lid) is located on the right side of the vehicle.**
- **If the fuel filler cap is not tightened until it clicks or if the tether is caught under the cap, the CHECK ENGINE warning light/malfunction indicator light may illuminate. Refer to "CHECK ENGINE warning light/Malfunction indicator light" ☞3-16.**

CAUTION

- **Never add any cleaning agents to the fuel tank. The addition of a cleaning agent may cause damage to the fuel system.**
- **After refueling, turn the cap to the right until it clicks to ensure that it is fully tightened. If the cap is not securely tightened, fuel may leak out while the vehicle is being driven or fuel spillage could occur in the event of an accident, creating a fire hazard.**
- **Do not let fuel spill on the exterior surfaces of the vehicle. Because fuel may damage the paint, be sure to wipe off any spilled fuel quickly. Paint damage caused by spilled fuel is not covered under the SUBARU Limited Warranty.**
- **Always use a genuine SUBARU fuel filler cap. If you use the wrong cap, it may not fit or have proper venting and your fuel tank and emission control system may be damaged. It could also lead to fuel spillage and a fire.**
- **Immediately put fuel in the tank whenever the low fuel warning light illuminates. Engine misfires as a result of an empty tank could cause damage to the engine. Continuing to operate your vehicle at an extremely low fuel level may result in a reduction of engine performance.**

State emission testing (U.S. only)

WARNING

Testing of an All-Wheel Drive model must NEVER be performed on a single two-wheel dynamometer. Attempting to do so will result in uncontrolled vehicle movement and may cause an accident or injuries to persons nearby.

CAUTION

- **At state inspection time, remember to tell your inspection or service station in advance not to place your SUBARU AWD vehicle on a two-wheel dynamometer. Otherwise, serious transmission damage will result.**
- **Resultant vehicle damage due to improper testing is not covered under the SUBARU Limited Warranty and is the responsibility of the state inspection program or its contractors or licensees.**

California and a number of federal states have Inspection/Maintenance programs to inspect your vehicle's emission control system. If your vehicle does not pass this test, some states may deny renewal of your vehicle's registration.

Your vehicle is equipped with a computer that monitors the performance of the engine's emission control system. Certified emission inspectors will inspect the On-Board Diagnostic (OBDII) system as part of the state emission inspection process. The OBDII system is designed to detect engine and transmission problems that might cause the vehicle emissions to exceed allowable limits. OBDII inspections apply to all 1996 model year and newer passenger cars and trucks. Over 30 states plus the District of Columbia have implemented emission inspection of the OBDII system.

- The inspection of the OBDII system consists of a visual operational check of the "**CHECK ENGINE**" warning light/malfunction indicator light (MIL) and an examination of the OBDII system with an electronic scan tool.
- A vehicle passes the OBDII system inspection if proper operation of the "**CHECK ENGINE**" warning light is observed, there are no stored diagnostic trouble codes, and the OBDII readiness monitors are all complete.
- A vehicle fails the OBDII inspection if the "**CHECK ENGINE**" warning light is not properly operating (light is illuminated or is not working due to a burned out bulb) or there is one or more diagnostic trouble codes stored in the vehicle's computer.
- A state emission inspection may reject (not pass or fail) a vehicle if the number of OBDII system readiness monitors "**NOT READY**" is greater than one. If the vehicle's battery has been recently replaced or disconnected, the OBDII system inspection may indicate that the vehicle is not ready for the emission test. Under this condition, the vehicle driver should be instructed to drive his/her vehicle for a few days to reset the readiness monitors and return for an emission re-inspection.
- Owners of rejected or failing vehicles should contact their SUBARU Dealer for service.

Some states still use dynamometers in their emission inspection program. A dynamometer is a treadmill or roller-like testing device that allows your vehicle's wheels to turn while the vehicle remains in one place. Prior to your vehicle being put on a dynamometer, tell your emission inspector not to place your SUBARU AWD vehicle on a two-wheel dynamometer. **Otherwise, serious transmission damage will result.**

– CONTINUED –

The U.S. Environmental Protection Agency (EPA) and states using two-wheel dynamometers in their emission testing program have EXEMPTED SUBARU AWD vehicles from the portion of the testing program that involves a two-wheel dynamometer. There are some states that use four-wheel dynamometers in their testing program. When properly used, this equipment should not damage a SUBARU AWD vehicle.

Under no circumstances should the rear wheels be jacked off the ground, nor should the driveshaft be disconnected for state emission testing.

Preparing to drive

You should perform the following checks and adjustments every day before you start driving.

1. Check that all windows, mirrors, and lights are clean and unobstructed.
2. Check the appearance and condition of the tires. Also check tires for proper inflation.
3. Look under the vehicle for any sign of leaks.
4. Check that the hood and rear gate are fully closed.
5. Check the adjustment of the seat.
6. Check the adjustment of the inside and outside mirrors.
7. Fasten your seatbelt. Check that your passengers have fastened their seatbelts.
8. Check the operation of the warning and indicator lights when the ignition switch is turned to the “ON” position.
9. Check the gauges, indicator and warning lights after starting the engine.
10. Check that no small animals enter the engine compartment.

⚠ CAUTION

Trapping small animals in the cooling fan and belts of the engine may result in a malfunction. Check that no small animal enters the engine compartment and under the vehicle before starting the engine.

NOTE

- **Engine oil, engine coolant, brake fluid, washer fluid and other fluid levels should be checked daily, weekly or at fuel stops.**
- **When towing a trailer, refer to “Trailer hitch (dealer option)” ☞8-15.**

Starting and stopping the engine (models without push-button start system)

■ General precautions when starting/stopping engine

⚠ WARNING

- Never start the engine from outside the vehicle (except when using the remote engine start system). It may result in an accident.
- Do not leave the engine running in locations with poor ventilation, such as a garage and indoors. The exhaust gas may enter the vehicle or indoors, and it may result in carbon monoxide poisoning.
- Do not start the engine near dry foliage, paper, or other flammable substances. The exhaust pipe and exhaust emissions can create a fire hazard at high temperatures.

⚠ CAUTION

- If the engine is stopped during driving, the catalyst may overheat and burn.
- When starting the engine, be sure to sit in the driver's seat (except when using the remote engine start system).

NOTE

- Avoid rapid racing and rapid acceleration immediately after the engine has started.
- For a short time after the engine has started, the engine speed is kept high. When the warm-up is completed, the engine speed lowers automatically.
- On rare occasions, it may be difficult to start the engine depending on the fuel and the usage condition (repeated driving of a distance in which the engine has not warmed up sufficiently). In such a case, it is recommended that you change to a different brand of fuel.
- On rare occasions, transient knocking may be heard from the engine when the accelerator is operated rapidly such as a rapid start-up and a rapid acceleration. This is not a malfunction.
- The engine starts more easily when the headlights, air conditioner and rear window defogger are turned off.

■ Starting engine

⚠ CAUTION

Do not operate the starter motor continuously for more than 10 seconds. If the engine fails to start after operating the starter for 5 to 10 seconds, wait for 10 seconds or more before trying again.

NOTE

It may be difficult to start the engine when the battery has been disconnected and reconnected (for maintenance or other purposes). This difficulty is caused by the electronically controlled throttle's self-diagnosis function. To overcome it, keep the ignition switch in the "ON" position for approximately 10 seconds before starting the engine.

– CONTINUED –

▼ MT models

1. Apply the parking brake.
2. Turn off unnecessary lights and accessories.
3. Depress the clutch pedal to the floor and shift the shift lever into neutral. Hold the clutch pedal to the floor while starting the engine.

The starter motor will only operate when the clutch pedal is depressed fully to the floor.

4. Turn the ignition switch to the “ON” position and check the operation of the warning and indicator lights. Refer to “Warning and indicator lights” ☞3-13.
5. Turn the ignition switch to the “START” position **without** depressing the accelerator pedal. Release the key immediately after the engine has started.

If the engine does not start, try the following procedure.

(1) Turn the ignition switch to the “LOCK”/“OFF” position and wait for at least 10 seconds. After checking that the parking brake is firmly set, turn the ignition switch to the “START” position while depressing the accelerator pedal slightly (approximately a quarter of the full stroke). Release the accelerator pedal as soon as the engine starts.

(2) If this fails to start the engine, turn the ignition switch back to the “LOCK”/“OFF” position and wait for at least 10 seconds. Then fully depress the accelerator pedal and turn the ignition switch to the “START” position. If the engine starts, quickly release the accelerator pedal.

(3) If this fails to start the engine, turn the ignition switch again to the “LOCK”/“OFF” position. After waiting for 10 seconds or longer, turn the ignition switch to the “START” position without depressing the accelerator pedal.

(4) If the engine still does not start, contact your nearest SUBARU dealer for assistance.

6. Confirm that all warning and indicator lights have turned off after the engine has started. The fuel injection system automatically lowers the idle speed as the engine warms up.

▼ CVT models

1. Apply the parking brake.
2. Turn off unnecessary lights and accessories.
3. Shift the select lever to the “P” or “N” position (preferably the “P” position).

The starter motor will only operate when the select lever is at the “P” or “N” position.

4. Turn the ignition switch to the “ON” position and check the operation of the warning and indicator lights. Refer to “Warning and indicator lights” ☞3-13.
5. Turn the ignition switch to the “START” position **without** depressing the accelerator pedal. Release the key immediately after the engine has started.

If the engine does not start, try the following procedure.

(1) Turn the ignition switch to the “LOCK”/“OFF” position and wait for at least 10 seconds. After checking that the parking brake is firmly set, turn the ignition switch to the “START” position while depressing the accelerator pedal slightly (approximately a quarter of the full stroke). Release the accelerator pedal as soon as the engine starts.

(2) If this fails to start the engine, turn the ignition switch back to the “LOCK”/“OFF” position and wait for at least 10 seconds. Then fully depress the accelerator pedal and turn the ignition switch to the “START” position. If the engine starts, quickly release the accelerator pedal.

(3) If this fails to start the engine, turn the ignition switch again to the “LOCK”/“OFF” position. After waiting for 10 seconds or longer, turn the ignition switch to the “START” position

without depressing the accelerator pedal.

(4) If the engine still refuses to start, contact your nearest SUBARU dealer for assistance.

6. Confirm that all warning and indicator lights have turned off after the engine has started. The fuel injection system automatically lowers the idle speed as the engine warms up.

While the engine is warming up, make sure that the select lever is at the “P” or “N” position and that the parking brake is applied.

CAUTION

If you restart the engine while the vehicle is moving, shift the select lever into the “N” position. Do not attempt to place the select lever of a moving vehicle into the “P” position.

■ Stopping the engine

The ignition switch should be turned off only when the vehicle is stopped and the engine is idling.

WARNING

Do not stop the engine when the vehicle is moving. This will cause loss of power to the power steering and the brake booster, making steering and braking more difficult. It could also result in accidental activation of the “LOCK”/“OFF” position on the ignition switch, causing the steering wheel to lock.

Starting and stopping engine (models with push-button start system)

■ Safety precautions

Refer to “Safety precautions” ☞2-10.

■ Operating range for push-button start system

Refer to “Operating range for push-button start system” ☞3-6.

■ Starting engine

WARNING

- **There are some general precautions when starting the engine. Carefully read the precautions described in “General precautions when starting/stopping engine” ☞7-9.**
- **If the indicator on the push-button ignition switch flashes in green after the engine has started, never drive the vehicle. The steering is still locked, and it may result in an accident.**

– CONTINUED –

CAUTION

- **When the operation indicator on the push-button ignition switch is flashing in orange, there may be a malfunction with the vehicle. Contact a SUBARU dealer immediately.**
- **If the indicator on the push-button ignition switch is flashing in green after the engine has started, it means that the steering is still locked. Depress the brake pedal while moving the steering wheel to the right and left, and press the push-button ignition switch.**
- **Do not continue pressing the push-button ignition switch for more than 10 seconds. Doing so could cause a malfunction. If the engine does not start, stop pressing the push-button ignition switch. Instead, press the push-button ignition switch without depressing the brake pedal to switch the power status to "OFF". Wait 10 seconds, and then press the push-button ignition switch to start the engine.**

NOTE

- **When the push-button ignition switch is pressed while depressing the brake pedal, the engine starter operates for a maximum of 10 seconds and after starting the engine, the starter stops automatically.**
- **When the push-button ignition switch is pressed while depressing the brake pedal, the engine can be started regardless of the status of the push-button ignition switch.**
- **If the security indicator light illuminates when you attempt to start the engine but the engine does not start, press the push-button ignition switch to switch the power to "OFF" and then try to start the engine again.**
- **If the engine does not start, press the push-button ignition switch without depressing the brake pedal to switch the power to "OFF". Then, while depressing the brake pedal more forcefully, press the push-button ignition switch.**
- **The engine start procedures may not function depending on the radio wave conditions around the vehicle. In such a case, refer to "Starting engine" ☞9-18.**
- **If the vehicle battery is discharged, the steering cannot be unlocked. Charge the battery.**

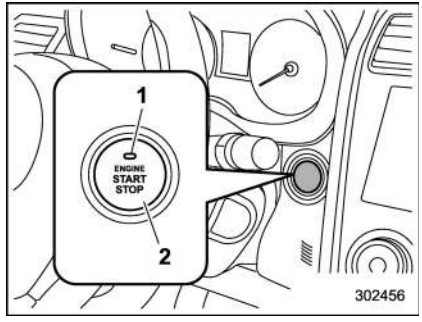

1) Operation indicator
2) Push-button ignition switch

When the push-button ignition switch is pressed while depressing the brake pedal, the engine will start. The starting procedure for the engine is as follows.

1. Carry the access key, and sit in the driver's seat.
2. Apply the parking brake.
3. Shift the select lever into the "P" position. The engine can also start when the select lever is in the "N" position, however, for safety reasons, start in the "P" position.
4. Depress the brake pedal until the operation indicator on the push-button ignition switch turns green. When starting

with the select lever in the “N” position, the indicator does not turn green.

5. While depressing the brake pedal, press the push-button ignition switch.

NOTE

- **While pressing the select lever button in, the indicator on the push-button ignition switch will not turn green even when the select lever is in the “P” position.**
- **In case the engine does not start by the normal engine start procedure, move the select lever to the “P” position, and switch the power to “ACC”. Depress the brake pedal, and press the push-button ignition switch for at least 15 seconds. The engine may start. Only use this engine start procedure in case of emergency.**
- **When the engine is not started, the brake pedal may feel stiff. In such a case, depress the brake pedal more forcefully than usual. Check that the operation indicator on the push-button ignition switch turns green, and press the push-button ignition switch to start the engine.**

■ Stopping engine

1. Stop the vehicle completely.
2. Move the select lever to the “P” position.
3. Press the push-button ignition switch. The engine will stop, and the power will be switched off.

WARNING

- **Do not touch the push-button ignition switch during driving.**

  When the push-button ignition switch is operated as follows, the engine will stop.

  – The switch is pressed and held for 3 seconds or longer.

  – The switch is pressed briefly 3 times or more in succession.

  When the engine stops, the brake booster will not function. A greater foot pressure will be required on the brake pedal.

  The power steering system will not operate either. A greater force will be required to steer, and it may result in an accident.
- **If the engine stops during driving, do not operate the push-button ignition switch or open any of the doors until the vehicle is stopped in a safe location. It is dangerous because the steering lock may be activated. Stop the vehicle in a safe place, and contact a SUBARU dealer immediately.**

CAUTION

- **Do not stop the engine while the select lever is in a position other than the “P” position.**
- **If the engine is stopped while the select lever is in a position other than the “P” position, the power will be in “ACC”. If the vehicle is left in this condition, the battery may be discharged.**

NOTE

Although you can stop the engine by operating the push-button ignition switch, do not stop the engine during driving except in an emergency.

■ When access key does not operate properly

Refer to “Access key – if access key does not operate properly” ☞9-17.

Remote engine start system (dealer option)

WARNING

- **There are some general precautions when starting the engine. Carefully read the precautions described in "General precautions when starting/stopping engine" ☞7-9.**
- **Do not remote start a vehicle in an enclosed environment (e.g. closed garage). Prolonged operation of a motor vehicle in an enclosed environment can cause a harmful build-up of Carbon Monoxide. Carbon Monoxide is harmful to your health. Exposure to high levels of Carbon Monoxide can cause headaches, dizziness or in extreme cases unconsciousness and/or death.**
- **Before performing any servicing of the vehicle, temporarily place the remote engine start system in service mode to prevent the system from unexpectedly starting the engine.**

The remote engine start system allows you to start the engine from outside the vehicle. In addition, the remote engine start system can activate the heater or air conditioner, providing you with a comfortable cabin upon entry.

NOTE

The length of time for which it is acceptable to allow the engine to remain idling may be bound by local laws and regulations. Check the local rules when using the remote engine start system.

■ Models with "keyless access with push-button start system"

NOTE

For more details, refer to the Owner's Manual supplement for the remote engine start system.

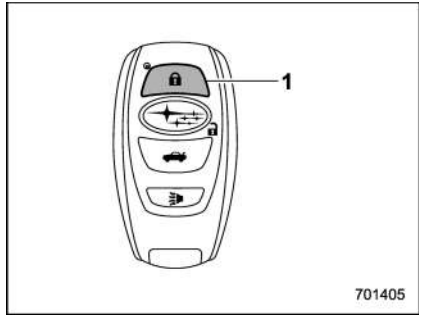

Access key
1) Lock button

An access key can be used as the remote engine start transmitter. Operate the lock button to start or stop the engine as follows.

▼ Before starting the engine

Before using the remote engine start system to start the engine, confirm the following conditions.

- The select lever is in the “P” position.
- All doors including the rear gate are closed.
- The engine hood is closed.
- The push-button ignition switch is in the “OFF” position.

▼ When starting the engine

To start the engine with remote engine start system, briefly press the lock button twice within 2 seconds, then press and hold the lock button for 3 seconds.

1. Press the lock button briefly. The hazard warning flashers then flash once and the keyless buzzer chirps once.
2. Within 2 seconds, press the lock button briefly again. The hazard warning flashers then flash once again, and the keyless buzzer chirps once again.
3. After step 2, immediately press and hold the lock button. The hazard warning flashers then flash three times, and the horn will honk once.
4. Approximately 3 seconds after step 3, release the lock button. The engine will then start successfully.

▼ When stopping the engine

Press and hold the lock button to stop the engine with remote engine start system.

▼ Automatic engine shutdown

The remote engine start system will automatically shut down or will not start the engine under the following conditions.

- The total run-time has exceeded 20 minutes.
- Any door or the rear gate is opened.
- The select lever is moved to any position other than “P”.
- The engine hood is opened.
- The push-button ignition switch is pressed.
- The brake pedal is depressed.
- The engine speed is 3,000 rpm or more.

The time until the engine automatically stops differs according to the setting.

To change the time until the engine automatically stops, contact your SUBARU dealer. However, local laws and regulations may prohibit changing this time.

■ Models without “keyless access with push-button start system”

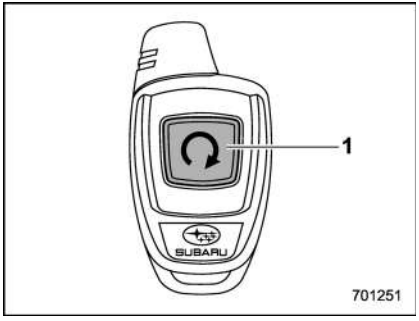

Remote engine starter transceiver (fob)
1) Fob button

▼ Starting the engine

NOTE

All vehicle doors (including rear gate) and the engine hood must be closed prior to activating the remote engine start system. Any open entry point will prevent starting or cause the engine to stop.

The remote engine start system is activated by pressing the fob button on your remote engine starter transceiver (fob) twice within 3 seconds. If the fob is within

– CONTINUED –

operating range of the system and the start request is received, the following phenomena will occur.

- The fob flashes and beeps once.
- The horn sounds once.
- The side marker lights, tail lights, and parking lights flash once.

If the fob is not within range (the user is too far away from the vehicle), the fob will indicate two long flashes without beeping.

The system will check certain safety preconditions before starting, and if all conditions are met, the engine will start within 5 seconds. After the engine starts, the following phenomena will occur.

- The fob flashes and beeps twice.
- The horn sounds once.
- The side marker lights, tail lights, and parking lights flash once.

While the engine is idling via the remote engine start system, the following phenomena will occur.

- The side marker lights, tail lights, and parking lights remain illuminated.
- The fob button flashes once every 3 seconds.
- The power windows are disabled.

If the engine turns over but does not start (or starts and stalls) the remote engine start system will power off and then attempt to start the engine 3 additional times. The system will not attempt to restart the engine if it determines a vehicle malfunction is preventing starting. If the engine does not start after 3 additional attempts, the remote engine start request will be aborted.

▼ Stopping the engine

Press and hold the fob button for at least 2 seconds to stop the engine. The fob will flash and beep three times, indicating the engine has stopped. If the stop request is not received (for example, if the user is too far away from the vehicle), the fob will continue to flash once every 3 seconds. The system will automatically stop the engine after 15 minutes.

▼ Remote start safety features

For safety and security reasons, the remote engine start system will prevent starting (or stop the engine if running) and sound the horn twice if any of the following conditions is detected. In addition, the fob will flash and beep 3 times.

- The brake pedal is depressed
- A key is in the ignition switch
- The engine hood is open
- The remote start system “Service mode” is engaged
- The engine idle speed exceeds 3,500 RPM
- The security alarm is triggered
- The select lever is not in the “P” position (CVT models)

If the system detects any door (including the rear gate) open during operation, it will prevent starting or stop the engine, and sound the horn and flash side marker lights, tail lights, and parking lights 6 times.

In addition to the items above, if the vehicle’s engine management system determines there is a safety risk due to a vehicle-related problem, the vehicle will power down and the horn will sound 3 times.

NOTE

- **If the alarm system is armed at the time of remote engine starter activation (the security indicator light on the combination meter is flashing), the alarm system will remain armed throughout the remote start run cycle.**
- **If the alarm system is disarmed at the time of remote engine starter activation (the security indicator light on the combination meter is not flashing), the alarm system will remain disarmed throughout the remote start run cycle.**

▼ Remote start operation - fob confirmation

Your remote engine starter fob is a bidirectional transceiver that can confirm system operation with several different visual and audible indications. The fob's LED-backlit button and internal piezo buzzer will indicate status of the system using the following flash and beep sequences, provided the fob is within operational range of the system.

– CONTINUED –

Precondition	Fob Indication		Meaning
	Flash	Beep	
Fob start button is being pressed	Continuous while button is held down	—	The fob is transmitting an RF signal
User attempts to start engine by pressing fob button twice within 3 sec	1 flash	1 beep	Engine start request received
	2 flashes	2 beeps	Engine started successfully
	1 flash every 3 sec	—	Engine idling
	3 flashes	3 beeps	Vehicle is in range but engine not started
	2 long flashes	—	Vehicle not in range (engine not started)
Engine idling by remote engine start operation	1 flash every 3 sec	—	Engine idling
	3 flashes	3 beeps	Engine stopped by system timeout or for safety reasons (see sections above)
User attempts to stop engine by pressing and holding fob button for at least 2 sec.	3 flashes	3 beeps	Engine stopped by user request
	1 flash every 3 sec	—	Stop request not received. Engine still idling.

Entering the vehicle while it is running via remote start

1. Unlock the vehicle doors using the keyless access function (if equipped) or remote keyless entry system. If the vehicle's doors are unlocked manually using the key, the vehicle's alarm system will trigger (if the alarm system is armed prior to activating the remote engine start system) and the engine will turn off. Perform either of the following procedures to disarm the alarm system. Refer to "Alarm system" ☞2-26.
   - Insert the key into the ignition switch and turn it to the "ON" position (models without "keyless access with push-button start system")
   - Turn the push-button ignition switch to the "ACC" or "ON" position (models with "keyless access with push-button start system")
   - Press any button on the access key/remote keyless entry transmitter.
2. Enter the vehicle.
3. The engine will shut down when any door or the rear gate is opened.
4. Insert the key into the ignition switch and turn to the "START" position to restart the engine.

Entering the vehicle following remote engine start shutdown

An alarm trigger may occur if the vehicle is opened by the remote keyless entry transmitter within a few seconds immediately following remote engine start shutdown.

Pre-heating or pre-cooling the interior of the vehicle

Before exiting the vehicle, set the temperature controls to the desired setting and operation. After the system starts the engine, the heater or air conditioning will activate and heat or cool the interior to your setting.

Service mode (models without "keyless access with push-button start system")

In service mode, the remote engine start function is temporarily disabled to prevent the system from unexpectedly starting the engine while being serviced.

To engage or disengage service mode:

1. Enter the vehicle and close all vehicle doors and the rear gate.
2. Verify that the select lever is in the "P" position (CVT models)
3. Depress and hold the brake pedal
4. Turn the ignition switch to the "ON" position
5. Press and release the remote engine start transmitter "" button three times. The system will honk the vehicle's horn each time the button is pressed.
6. The system will pause for 1 second then honk the vehicle's horn three times to indicate that the service mode has been engaged or honk one time to indicate that the service mode has been disengaged.

NOTE

When taking your vehicle in for service, it is recommended that you inform the service personnel that your vehicle is equipped with a remote engine start system.

Remote transmitter program (models without "keyless access with push-button start system")

New transmitters can be programmed to the remote engine start system in the event that a transmitter is lost, stolen, damaged or additional transmitters are desired (the system will accept up to eight transmitters). New remote engine start transmitters can be programmed accord-

– CONTINUED –

ing to the following procedure.

1. Open the driver's door (the driver's door must remain opened throughout the entire process).
2. Depress and hold the brake pedal.
3. Turn the ignition switch to "ON" then "LOCK"/"OFF", back to "ON" then "LOCK"/"OFF", back to "ON" then "LOCK"/"OFF", then back to "ON" again and leave the ignition "ON" throughout the programming process.
4. The system will flash the side marker lights, tail lights and parking lights and honk the horn three times, indicating that the system has entered the transmitter learn mode.
5. Press and release the "" button on the transmitter that you want to program.
6. The system will flash the side marker lights, tail lights and parking lights and honk the horn one time, indicating that the system has learned the transmitter. Upon successful programming, the remote start confirmation transmitter button will flash one time.
7. Repeat step 5 for any additional transmitters (the system will accept up to eight transmitters).
8. The system will exit the transmitter learn mode if the key is turned to the "LOCK"/"OFF" position, the door is closed or after 2 minutes.

■ System maintenance

NOTE

For models without "keyless access with push-button start system":

In the event that the vehicle's battery is replaced, discharged or disconnected, it will be necessary to start the vehicle a minimum of one time using the key prior to activating the remote engine start system. This is required to allow the vehicle electronic systems to re-synchronize.

▼ Changing the batteries

⚠ CAUTION

- **Do not let dust, oil or water get on or in the remote engine start transmitter when replacing the battery.**
- **Be careful not to damage the printed circuit board in the remote engine start transmitter when replacing the battery.**
- **Be careful not to allow children to touch the battery and any removed parts; children could swallow them.**
- **There is a danger of explosion if an incorrect replacement battery is used. Replace only with the same or equivalent type of battery.**
- **Batteries should not be exposed to excessive heat such as sunshine, fire or the like.**

For models with "keyless access with push-button start system":

Perform the procedure described in "Replacing battery of access key" ☞11-42.

For models without "keyless access with push-button start system":

The two 3-volt lithium batteries (model CR-2032) supplied in your remote engine start transmitter should last approximately one year, depending on usage. When the batteries begin to weaken, you will notice a decrease in range (distance from the vehicle that your remote control operates). Follow the instructions below to change the remote engine start transmitter batteries.

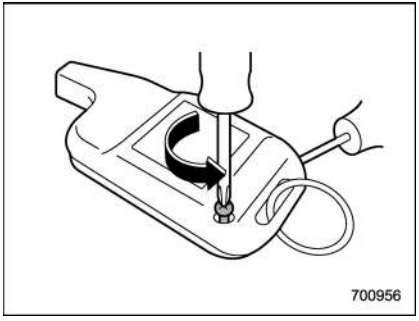

1. Remove the small phillips screw located on the back side lower left corner of the transmitter.

2. Carefully pry the remote engine start transmitter halves apart using a small flathead screwdriver.

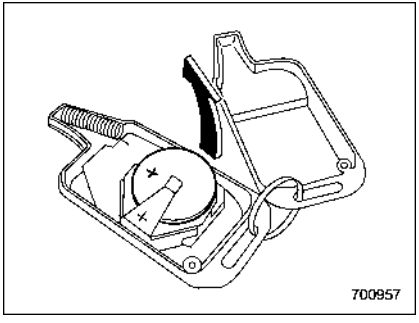

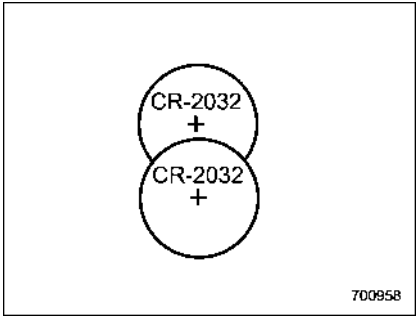

3. Remove the circuit board from the bottom half of the case and remove the batteries and replace with new ones. Be sure to observe the (+) sign on the old batteries before removing them to ensure that the new batteries are inserted properly (battery "+" should be pointed away from the transmitter circuit board on both batteries).

4. Carefully snap the case halves back together, reinstall the phillips screw and test the remote engine start system.

NOTE

- **This device complies with Part 15 of the FCC Rules and with RSS-210 of Industry Canada. Operation is subject to the following two conditions: (1) This device may not cause harmful interference, and (2) this device must accept any interference received, including interference that may cause undesired operation.**

Changes or modifications not expressly approved by the party responsible for compliance could void the user's authority to operate the equipment and void warranty.

- **To comply with the FCC RF exposure compliance requirements, no change to the antenna or the device is permitted. Any change to the antenna or the device could result in the device exceeding the RF exposure requirements and void user's authority to operate the device.**

Manual transmission

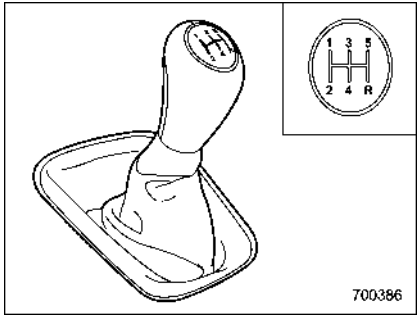

The manual transmission is a fully synchromeshed, 5-forward-speed and 1-reverse-speed transmission.

The shift pattern is shown on the shift lever knob. When shifting from 5th gear to reverse gear, first return the shift lever to the neutral position then shift into reverse gear.

To change gears, fully depress the clutch pedal, move the shift lever, and gradually let up on the clutch pedal.

If it is difficult to shift into gear, put the transmission in neutral, release the clutch pedal momentarily, and then try again.

WARNING

- **Do not drive the vehicle with the clutch disengaged (i.e., when the clutch pedal is depressed) or with the shift lever in the neutral position. Engine braking has no effect in either of these conditions and the risk of an accident is consequently increased.**
- **Do not engage the clutch (i.e., release the clutch pedal) suddenly when starting the vehicle. By doing so the vehicle might unexpectedly accelerate or the transmission could malfunction.**

CAUTION

Shift into reverse ONLY when the vehicle has completely stopped. It may cause damage to the transmission to try shifting into reverse when the vehicle is moving.

■ Shifting speeds

▼ Recommended shifting speeds

The best compromise between fuel economy and vehicle performance during normal driving is ensured by shifting up at the speeds listed in the following table.

Shift up	mph (km/h)
1st to 2nd	15 (24)
2nd to 3rd	25 (40)
3rd to 4th	40 (64)
4th to 5th	45 (72)

▼ Maximum allowable speeds

The following table shows the maximum speeds that are possible with each different gear. The tachometer's needle will enter the red area if these speeds are exceeded.

With the exception of cases where sudden acceleration is required, the vehicle should not be driven with the tachometer's needle inside the red area. Failure to observe this precaution can lead to excessive engine wear and poor fuel economy.

mph (km/h)

Gear	Crosstrek models
1st	28 (46)
2nd	53 (86)
3rd	78 (126)
4th	Legal speed limit (Posted limit speed)
5th	

WARNING

When shifting down a gear, ensure that the vehicle is not travelling at a speed exceeding the Maximum Allowable Speed for the gear which is about to be selected. Failure to observe this precaution can lead to engine over-revving and this in turn can result in engine damage.

In addition, sudden application of engine brakes when the vehicle is travelling on a slippery surface can lead to wheel locking; as a consequence, control of the vehicle may be lost and the risk of an accident increased.

NOTE

Never exceed the posted speed limit.

■ Driving tips

Do not drive with your foot resting on the clutch pedal and do not use the clutch to hold your vehicle at a standstill on an upgrade. Either of those actions may cause clutch damage.

Do not drive with your hand resting on the shift lever. This may cause wear on the transmission components.

When it is necessary to reduce vehicle speed due to slow traffic, turning corners, or driving up steep hills, downshift to a lower gear before the engine starts to labor.

On steep downgrades, downshift the transmission to 4th, 3rd or 2nd gear as necessary; this helps to maintain a safe speed and to extend brake pad life.

In this way, the engine provides a braking effect. Remember, if you “ride” (over use) the brakes while descending a hill, they may overheat and not work properly.

The engine may, on rare occasions, knock when the vehicle rapidly accelerates or rapidly pulls away from a standstill. This phenomenon is not an indication of a problem in your vehicle.

Continuously variable transmission

WARNING

Do not shift from the “P” or “N” position into the “D” or “R” position while depressing the accelerator pedal. This may cause the vehicle to jump forward or backward.

CAUTION

- **Observe the following precautions. Failure to observe these precautions could cause damage to the transmission.**
  - **Shift into the “P” or “R” position only after the vehicle has completely stopped.**
  - **Do not shift from the “D” position into the “R” position or vice versa until the vehicle has completely stopped.**
- **Do not race the engine for more than 5 seconds in any position except the “N” or “P” position when the brake is applied or when chocks are used in the wheels. This may cause the**

– CONTINUED –

transmission fluid to overheat.

- Never move the vehicle rearward by inertia with the select lever set in a forward driving position or move the vehicle forward by inertia with the select lever set in the "R" position. Doing so may result in an unexpected accident or malfunction.
- When parking the vehicle, first securely apply the parking brake and then place the select lever in the "P" position. Do not park for a long time with the select lever in any other position as doing so could result in a dead battery.

■ Continuously variable transmission features

The continuously variable transmission is electronically controlled and provides an infinite number of forward speeds and 1 reverse speed. It also has a manual mode.

NOTE

- When the engine coolant temperature is still low, the transmission will upshift or downshift at higher engine speeds than when the coolant temperature is sufficiently high in order to shorten the warm-up time and improve driveability. The gearshift timing will automatically shift to the normal timing after the engine has warmed up.
- Immediately after transmission fluid is replaced, you may feel that the transmission operation is somewhat unusual. This results from invalidation of data which the on-board computer has collected and stored in memory to allow the transmission to shift at the most appropriate times for the current condition of your vehicle. Optimized shifting will be restored as the vehicle continues to be driven for a while.
- When driving a CVT model under continuous heavy load conditions such as when towing a camper or climbing a long, steep hill, the engine speed or the vehicle speed may automatically be reduced. This is not a malfunction. This phenomenon results from the engine control function maintaining the cooling performance of the vehicle. The engine and vehicle speed will return to a normal speed when the engine is able to maintain the optimum cooling performance after the heavy load decreases. Driving under a heavy load must be performed with extreme care. Do not try to pass a vehicle in front when driving on an uphill slope while towing.
- The continuously variable transmission is a chain type system that provides superior transmission efficiency for maximum fuel economy. At times, depending on varying driving conditions, a chain operating sound may be heard that is characteristic of this type of system.

■ Select lever

▼ Select lever positions

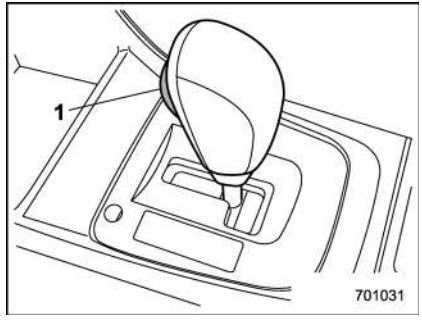

1) Select lever button

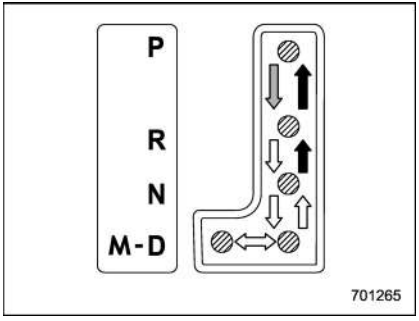

: With the brake pedal depressed, shift while pressing the select lever button in.
: Shift while pressing the select lever button in.
: Shift without pressing the select lever button.

The select lever has four positions, “P”, “R”, “N”, “D” and it also has an “M” gate.

NOTE

For some models, to protect the engine while the select lever is in the “P” or “N” position, the engine is controlled so that the engine speed may not become too high even if the accelerator pedal is depressed hard.

▼ P (Park)

This position is for parking the vehicle and starting the engine. In this position, the transmission is mechanically locked to prevent the vehicle from rolling freely.

When you park the vehicle, first apply the parking brake firmly, then shift into the “P” position. Do not hold the vehicle with only the mechanical friction of the transmission.

To shift the select lever from the “P” position to any other position, you should depress the brake pedal fully then move the select lever. This prevents the vehicle from lurching when it is started.

▼ R (Reverse)

This position is for backing the vehicle. To shift from the “N” to “R” position, stop the vehicle completely then move the lever to the “R” position while pressing the select lever button in.

When the ignition switch has been turned to the “LOCK”/“OFF” position, movement of the select lever from the “N” to “R” position is possible for a limited time period by depressing the brake pedal, and then it becomes impossible. For details, refer to “Shift lock function” ☞7-28.

▼ N (Neutral)

This position is for restarting a stalled engine. In this position, the transmission is neutral, meaning that the wheels and transmission are not locked. Therefore, the vehicle will roll freely, even on the slightest incline unless the parking brake or foot brake is applied.

Avoid coasting with the transmission in neutral. Engine braking has no effect in this condition.

⚠ WARNING

Do not drive the vehicle with the select lever in the “N” (neutral) position. Engine braking has no effect in this condition and the risk of an accident is consequently increased.

NOTE

If the select lever is in the “N” position when you stop the engine for parking, you may not subsequently be able to move it to the “R” and “P” positions. If this happens, turn the ignition switch to the “ON” position. You will then be able to move the select lever to the “P” position.

▼ D (Drive)

This position is for normal driving. The transmission shifts automatically and continuously into a suitable gear according to the vehicle speed and the acceleration

– CONTINUED –

you require. Also, while driving up and down a hill, the transmission assists and controls the driving performance and engine braking while corresponding to the road grade.

When more acceleration is required in “D” position, depress the accelerator pedal fully to the floor and hold that position. The transmission will automatically downshift. In this case, the transmission will operate like a conventional automatic transmission. When you release the pedal, the transmission will return to the original gear position.

If one of the shift paddles behind the steering wheel is operated while driving in the “D” position, the transmission will temporarily switch to the manual mode. In this mode, you can shift into any gear position using the shift paddles. For details about the manual mode, refer to “Selection of manual mode” ☞7-26. Once the vehicle speed stabilizes, the transmission will switch from the manual mode back to the “D” position for normal driving.

■ Selection of manual mode

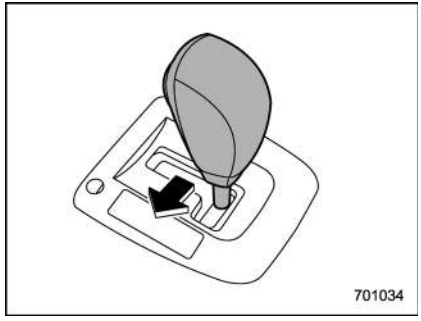

With the vehicle either moving or stationary, move the select lever from the “D” position to the “M” position to select the manual mode.

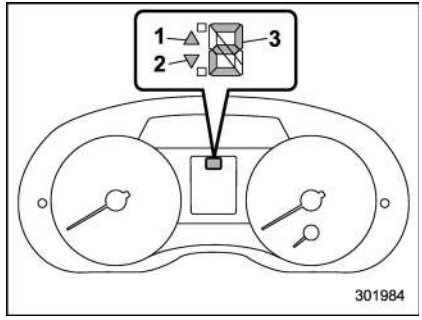

Type A
1) Upshift indicator
2) Downshift indicator
3) Gear position indicator

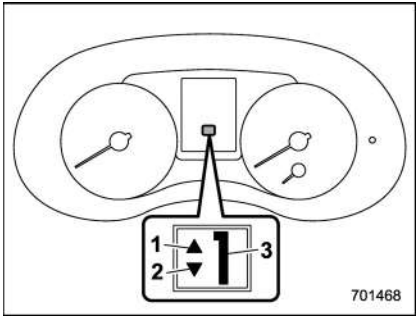

Type B
1) Upshift indicator
2) Downshift indicator
3) Gear position indicator

When the manual mode is selected, the gear position indicator and upshift indicator and/or downshift indicator on the combination meter illuminate.

The gear position indicator shows the currently selected gear in the 1st-to-6th-gear range. The upshift and downshift indicators show when a gear shift is possible. When the upshift indicator "▲" illuminates, upshifting is possible. When the downshift indicator "▼" illuminates, downshifting is possible. When both indicators illuminate, upshifting and downshifting are both possible. When the vehicle stops (for example, at traffic signals), the downshift indicator turns off.

Gearshifts can be performed using the shift paddle behind the steering wheel.

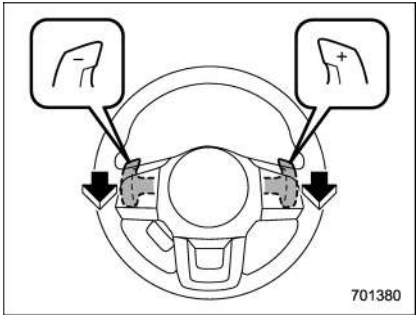

To upshift to the next higher gear position, pull the shift paddle that has "**+**" indicated on it. To downshift to the next lower gear position, pull the shift paddle that has "**–**" indicated on it.

To deselect the manual mode, return the select lever to the "D" position from the "M" position.

⚠ CAUTION

Do not place or hang anything on the shift paddles. Doing so may result in accidental gear shifting.

NOTE

Please read the following points carefully and bear them in mind when using the manual mode.

- **If you attempt to shift down when the engine speed is too high, i.e., when a downshift would push the tachometer needle beyond the red zone, beeps will be emitted to warn you that the downshift is not possible.**
- **If you attempt to shift up when the vehicle speed is too low, the transmission will not respond.**
- **You can perform a skip-shift (for example, from 4th to 2nd) by operating the shift paddle twice in rapid succession.**
- **The transmission automatically selects 1st gear when the vehicle stops moving.**
- **If the temperature of the transmission fluid becomes too high, the "AT OIL TEMP" warning light on the combination meter will illuminate. Immediately stop the vehicle in a safe location and let the engine idle until the warning light turns off.**

– CONTINUED –

■ Shift lock function

The shift lock function helps prevent the improper operation of the select lever.

- The select lever cannot be operated unless the ignition switch is turned to the “ON” position and the brake pedal is depressed.
- The select lever cannot be moved from the “P” position to any other position before the brake pedal is depressed. Depress the brake pedal first, and then operate the select lever.
- Only the “P” position allows you to turn the ignition switch from the “ACC” position to the “LOCK”/“OFF” position and remove the key from the ignition switch.
- If the ignition switch is turned to the “LOCK”/“OFF” position while the select lever is in the “N” position, the select lever may not be moved to the “P” position after a period of time. Therefore, move the select lever to the “P” position with the brake pedal depressed soon after the ignition switch is turned to the “LOCK”/“OFF” position.

▼ Shift lock release

If the select lever cannot be operated, turn the ignition switch back to the “ON” position then move the select lever to the “P” position with the select lever button pressed and brake pedal depressed.

If the select lever does not move after performing the above procedure, perform the following steps.

- **When the select lever cannot be shifted from “P” to “N”:**

Refer to “Shift lock release using the shift lock release button” ☞7-28.

- **When the select lever cannot be shifted from “N” to “R”, “P”:**

Within 60 seconds after placing the ignition switch in the “ACC” position, move the select lever to the “P” position with the select lever button pressed and brake pedal depressed.

If you must perform the above procedure, the shift lock system (or the vehicle control system) may be malfunctioning. Contact a SUBARU dealer for an inspection as soon as possible.

If the select lever does not move after performing the above procedure, refer to “Shift lock release using the shift lock release button” ☞7-28.

▼ Shift lock release using the shift lock release button

Perform the following procedure to release the shift lock.

1. Apply the parking brake and turn the ignition switch to the “LOCK”/“OFF” position.

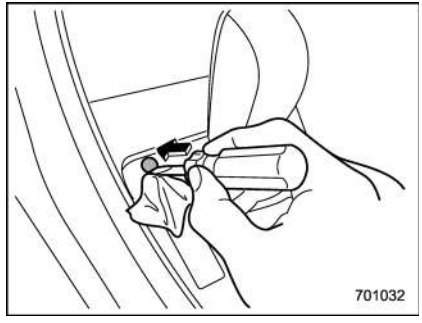

2. Wrap the tip of a flat-head screwdriver with vinyl tape or a cloth and use it to remove the shift lock cover. The shift lock release button is located under the shift lock cover.

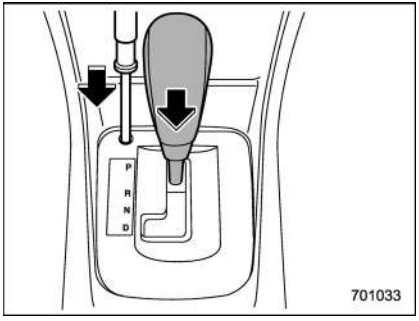

3. While depressing the brake pedal, insert a screwdriver into the hole, press the shift lock release button using a screwdriver, and then move the select lever.

If the select lever does not move after performing the above procedure, the shift lock system may be malfunctioning. Contact a SUBARU dealer for an inspection as soon as possible.

■ Driving tips

- Always apply the foot or parking brake when the vehicle is stopped in the “D” or “R” position.
- Make sure to apply the parking brake when parking your vehicle. Do not hold the vehicle with only the mechanical friction of the transmission.
- Do not keep the vehicle in a stationary position on an uphill grade by using the “D” position. Use the brake instead.
- The engine may, on rare occasions, knock when the vehicle rapidly accelerates or rapidly pulls away from a standstill. This phenomenon does not indicate a malfunction.

Power steering

■ Power steering warning light

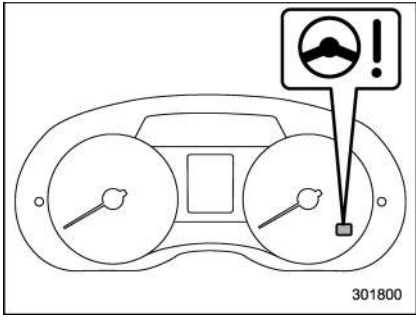

Type A

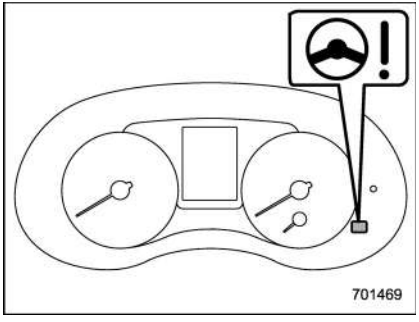

Type B

– CONTINUED –

■ Power steering system features

The vehicle is equipped with an electric power steering system. When the ignition switch is turned to the “ON” position, the power steering warning light on the combination meter illuminates to inform the driver that the warning system is functioning properly. Then, if the engine started, the warning light turns off to inform the driver that the steering power assist is operational.

⚠ CAUTION

When the power steering warning light is illuminated, there may be more resistance when the steering wheel is operated. Drive carefully to the nearest SUBARU dealer and have the vehicle inspected immediately.

NOTE

If the steering wheel is operated in the following ways, the power steering control system may temporarily limit the power assist in order to prevent the system components, such as the control computer and drive motor, from overheating.

- **The steering wheel is operated frequently and turned sharply while the vehicle is maneuvered at extremely low speeds, such as while frequently turning the steering wheel during parallel parking.**
- **The steering wheel remains in the fully turned position for a long period of time.**

At this time, there will be more resistance when steering. However this is not a malfunction. Normal steering force will be restored after the steering wheel is not operated for a while and the power steering control system has an opportunity to cool down. However, if the power steering is operated in a non-standard way which causes power assist limitation to occur too frequently, this may result in a malfunction of the power steering control system.

Braking

■ Braking tips

⚠ WARNING

Never rest your foot on the brake pedal while driving. This can cause dangerous overheating of the brakes and needless wear on the brake pads and linings.

▼ When the brakes get wet

When driving in rain or after washing the vehicle, the brakes may get wet. As a result, brake stopping distance will be longer. To dry the brakes, drive the vehicle at a safe speed while lightly depressing the brake pedal to heat up the brakes.

▼ Use of engine braking

Remember to make use of engine braking in addition to foot braking. When descending a grade, if only the foot brake is used, the brakes may start working improperly because of brake fluid overheating, caused by overheated brake pads. To help prevent this, shift into a lower gear to get stronger engine braking.

▼ Braking when a tire is punctured

Do not depress the brake pedal suddenly when a tire is punctured. This could cause

a loss of control of the vehicle. Keep driving straight ahead while gradually reducing speed. Then slowly pull off the road to a safe location.

■ Brake system

▼ Two separate circuits

Your vehicle has two separate circuit brake systems. Each circuit works diagonally across the vehicle. If one circuit of the brake system should fail, the other half of the system still works. If one circuit fails, the brake pedal will go down much closer to the floor than usual and you will need to press it down much harder. And a much longer distance will be needed to stop the vehicle.

▼ Brake booster

The brake booster uses engine manifold vacuum to assist braking force. Do not turn the ignition switch to the “LOCK”/ “OFF” position while driving because that will turn off the brake booster, resulting in poor braking power.

The brakes will continue to work even when the brake booster completely stops functioning. If this happens, however, you will have to depress the pedal much harder than normal and the braking distance will increase.

▼ Brake assist system

⚠ WARNING

Do not be overconfident about the brake assist. It is not a system that brings more braking ability to the vehicle beyond its braking capability. Always use the utmost care when driving regarding vehicle speed and safe distance.

⚠ CAUTION

When you need to brake suddenly, continue depressing the brake pedal strongly to bring the effect of the brake assist.

Brake assist is a driver assistance system. It assists the brake power when the driver cannot depress the brake pedal strongly and the brake power is insufficient.

Brake assist generates the brake power according to the speed at which the driver depresses the brake pedal.

NOTE

When you depress the brake pedal strongly or suddenly, the following phenomena occur. However, even though these occur, they do not indicate any malfunctions, and the brake assist system is operating properly.

- **You might feel that the brake pedal is applied by lighter force and generates a greater braking force.**
- **You might hear an ABS operating noise from the engine compartment.**

■ Disc brake pad wear warning indicators

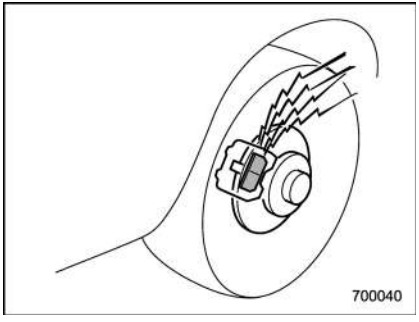

The disc brake pad wear warning indicators on the disc brakes give a warning noise when the brake pads are worn.

If a squeaking or scraping noise is heard from the disc brakes while braking, immediately have your vehicle checked by your SUBARU dealer.

ABS (Anti-lock Brake System)

The ABS prevents the lock-up of wheels which may occur during sudden braking or braking on slippery road surfaces. This helps prevent the loss of steering control and directional stability caused by wheel lock-up.

When the ABS is operating, you may hear a chattering noise or feel a slight vibration in the brake pedal. This is normal when the ABS operates.

The ABS will not operate when the vehicle speed is below approximately 6 mph (10 km/h).

⚠ WARNING

Always use the utmost care in driving – overconfidence because you are driving a vehicle with the ABS could easily lead to a serious accident.

⚠ CAUTION

- **The ABS does not always decrease stopping distance. You should always maintain a safe following distance from other vehicles.**
- **When driving on badly surfaced roads, gravel roads, icy roads, or over deep newly fallen snow, stopping distances may be longer for a vehicle with the ABS than one without. When driving under these conditions, therefore, reduce your speed and leave ample distance from other vehicles.**
- **When tire chains are installed, stopping distances may be longer for a vehicle with the ABS than one without. Be sure to reduce your speed and maintain a safe distance from the vehicle in front.**
- **When you feel the ABS operating, you should maintain constant brake pedal pressure. Do not pump the brake pedal since doing so may defeat the operation of the ABS.**

■ ABS self-check

Just after the vehicle is started, you may feel on the brake pedal a vibration similar to when the ABS operates, and you may also hear the sound of the ABS working from the engine compartment. This is caused by an automatic functional test of the ABS being carried out and does not indicate a malfunction.

■ ABS warning light

Refer to “ABS warning light” ☞3-21.

Electronic Brake Force Distribution (EBD) system

The EBD system maximizes the effectiveness of the brakes by allowing the rear brakes to supply a greater proportion of the braking force. It functions by adjusting the distribution of braking force to the rear wheels in accordance with the vehicle's loading condition and speed.

The EBD system is an integral part of the ABS and uses some of the ABS components to perform its function of optimizing the distribution of braking force. If any of the ABS components used by the EBD system malfunction, the EBD system also stops working.

When the EBD system is operating, you may hear a chattering noise or feel a slight vibration in the brake pedal. This is normal and does not indicate a malfunction.

■ Steps to take if EBD system malfunctions

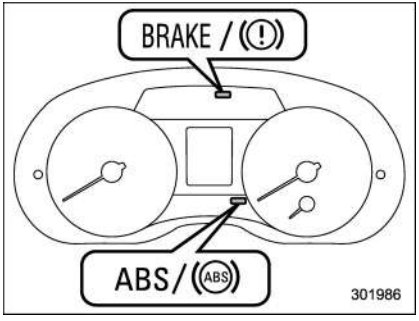

Type A

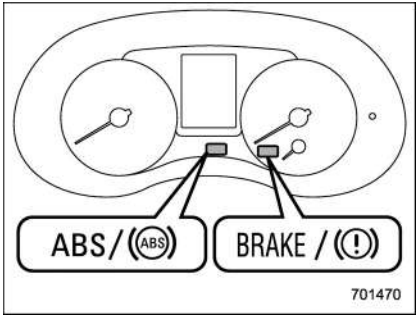

Type B

If a malfunction occurs in the EBD system, the system stops working and the brake system warning light and ABS warning light illuminate simultaneously.

The EBD system may be malfunctioning if the brake system warning light and ABS warning light illuminate simultaneously during driving.

Even if the EBD system malfunctions, the conventional braking system will still function. However, the rear wheels will be more prone to locking when the brakes are applied harder than usual and the vehicle's motion may therefore become somewhat harder to control.

If the brake system warning light and ABS warning light illuminate simultaneously, take the following steps.

1. Stop the vehicle in the nearest safe, flat location.
2. Apply the parking brake and turn off the engine.
3. Restart the engine.
4. Release the parking brake.

Even if both warning lights turn off:

The EBD system may be malfunctioning. Drive carefully to the nearest SUBARU dealer and have the system inspected.

If both warning lights illuminate again and remain illuminated after restarting the engine:

1. Turn off the engine again.

– CONTINUED –

2. Apply the parking brake.
3. Check the brake fluid level. For details about checking the brake fluid level, refer to “Checking the fluid level” ☞11-15.

- If the brake fluid level is not below the “MIN” mark, the EBD system may be malfunctioning. Drive carefully to the nearest SUBARU dealer and have the system inspected.
- If the brake fluid level is below the “MIN” mark, DO NOT drive the vehicle. Instead, have the vehicle towed to the nearest SUBARU dealer for repair.

WARNING

- **Driving with the brake system warning light illuminated is dangerous. This indicates your brake system may not be working properly. If the light remains illuminated, have the brakes inspected by a SUBARU dealer immediately.**
- **If at all in doubt about whether the brakes are operating properly, do not drive the vehicle. Have your vehicle towed to the nearest SUBARU dealer for repair.**

Vehicle Dynamics Control system

■ Safety precautions

WARNING

Always use the utmost care in driving – overconfidence because you are driving a vehicle with the Vehicle Dynamics Control system could easily lead to a serious accident.

CAUTION

- **Even if your vehicle is equipped with Vehicle Dynamics Control system, winter tires should be used when driving on snow-covered or icy roads; in addition, vehicle speed should be reduced considerably. Simply having a Vehicle Dynamics Control system does not guarantee that the vehicle will be able to avoid accidents in any situation.**
- **Activation of the Vehicle Dynamics Control system is an indication that the road being travelled on has a slippery surface; since having Vehicle Dynamics Control is no guarantee that full vehicle control will be maintained at all times and under all conditions, its activation should be seen as a sign that the speed of the vehicle should be reduced considerably.**
- **Whenever suspension components, steering components, or an axle are removed from a vehicle, have an inspection of that system performed by an authorized SUBARU dealer.**
- **The following precautions should be observed in order to ensure that the Vehicle Dynamics Control system is operating properly:**
  - **All four wheels should be fitted with tires of the same size, type, and brand. Furthermore, the amount of wear should be the same for all four tires.**
  - **Keep the tire pressure at the proper level as shown on the vehicle placard attached to the driver’s side door pillar.**
  - **Use only the specified temporary spare tire to replace a flat tire. With a temporary**

spare tire, the effectiveness of the Vehicle Dynamics Control system is reduced and this should be taken into account when driving the vehicle in such a condition.

- **If non-matching tires are used, the Vehicle Dynamics Control system may not operate correctly.**
- **The Vehicle Dynamics Control system helps prevent unstable vehicle motion such as skidding using control of the brakes and engine power. Do not turn off the Vehicle Dynamics Control system unless it is absolutely necessary. If you must turn off the Vehicle Dynamics Control system, drive very carefully according to the road surface conditions.**

■ System features

In the event of wheelspin and/or skidding on a slippery road surface and/or during cornering and/or an evasive maneuver, the Vehicle Dynamics Control system adjusts the engine's output and the wheels' respective braking forces to help maintain traction and directional control.

- **Traction Control Function**

The traction control function is designed to prevent spinning of the driving wheels on slippery road surfaces, thereby helping to maintain traction and directional control. Activation of this function is shown by flashing the Vehicle Dynamics Control operation indicator light.

- **Skid Suppression Function**

The skid suppression function is designed to help maintain directional stability by suppressing the wheels' tendency to slide sideways during steering operations. Activation of this function is shown by flashing the Vehicle Dynamics Control operation indicator light.

NOTE

- **The Vehicle Dynamics Control system may be considered normal when the following conditions occur.**
  - **– Slight twitching of the brake pedal is felt.**
  - **– The vehicle or steering wheel shakes to a small degree.**
  - **– An operating sound from the engine compartment is heard briefly when starting the engine and when driving off after starting the engine.**
  - **– The brake pedal seems to jolt when driving off after starting the engine.**
- **In the circumstances shown in the following list, the vehicle may be less stable than it feels to the driver. The Vehicle Dynamics Control System may therefore operate. Such operation does not indicate a system malfunction.**
  - **– on gravel-covered or rutted roads**
  - **– on unfinished roads**
  - **– when the vehicle is towing a trailer**
  - **– when the vehicle is fitted with snow tires or winter tires**
- **Activation of the Vehicle Dynamics Control system will cause operation of the steering wheel to feel slightly different compared to that for normal conditions.**
- **It is always important to reduce speed when approaching a corner, even if your vehicle is equipped with the Vehicle Dynamics Control system.**
- **Always turn off the engine before replacing a tire. Failure to do so may render the Vehicle Dynamics Control system unable to operate correctly.**

– CONTINUED –

■ Vehicle Dynamics Control system monitor

Refer to “Vehicle Dynamics Control warning light/Vehicle Dynamics Control operation indicator light” ☞3-24 and “Vehicle Dynamics Control OFF indicator light” ☞3-25.

■ Vehicle Dynamics Control OFF switch

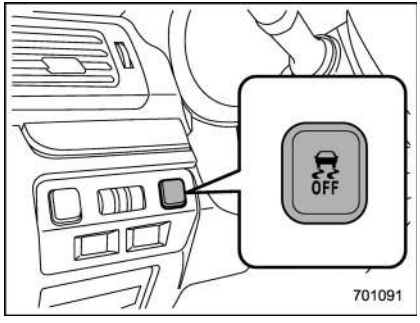

Vehicle Dynamics Control OFF switch

Pressing the Vehicle Dynamics Control OFF switch deactivates the Vehicle Dynamics Control system.

Creating an adequate driving wheel slip by deactivating the Vehicle Dynamics Control system temporarily may help to escape from the following situations. Use the Vehicle Dynamics Control OFF switch as necessary.

- a standing start on a steeply sloping road with a snowy, gravel-covered, or otherwise slippery surface
- extrication of the vehicle when its wheels are stuck in mud or deep snow

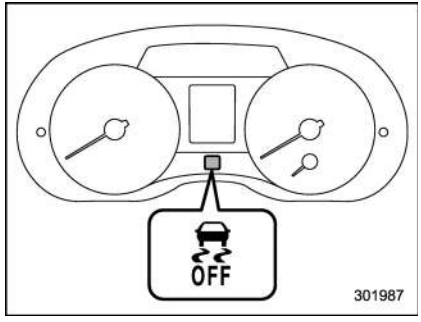

Vehicle Dynamics Control OFF indicator light (type A)

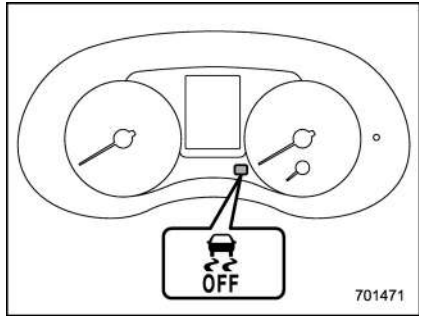

Vehicle Dynamics Control OFF indicator light (type B)

When the switch is pressed during engine operation, the Vehicle Dynamics Control OFF indicator light “” on the combination meter illuminates. The Vehicle Dynamics Control system will be deactivated and the vehicle will behave like a model not equipped with the Vehicle Dynamics Control system. When the switch is pressed again to reactivate the Vehicle Dynamics Control system, the Vehicle Dynamics Control OFF indicator light turns off.

With the Vehicle Dynamics Control system deactivated, traction and stability enhancement offered by Vehicle Dynamics Control system is unavailable. Therefore you should not deactivate the Vehicle Dynamics Control system except under

above-mentioned situations.

NOTE

- **When the switch has been pressed to deactivate the Vehicle Dynamics Control system, the Vehicle Dynamics Control system automatically reactivates itself the next time the ignition switch is turned to the "LOCK"/"OFF" position and the engine is restarted.**
- **If the switch is held down for 30 seconds or longer, the indicator light turns off, the Vehicle Dynamics Control system is activated, and the system ignores any further pressing of the switch. To make the switch usable again, turn the ignition switch to the "LOCK"/"OFF" position and restart the engine.**
- **When the switch is pressed to deactivate the Vehicle Dynamics Control system, the vehicle's running performance is comparable with that of a vehicle that does not have a Vehicle Dynamics Control system. Do not deactivate the Vehicle Dynamics Control system except when absolutely necessary.**
- **Even when the Vehicle Dynamics Control system is deactivated, components of the brake control system may still activate. When the brake control system is activated, the Vehicle Dynamics Control operation indicator light flashes.**

Tire pressure monitoring system (TPMS) (U.S.-spec. models)

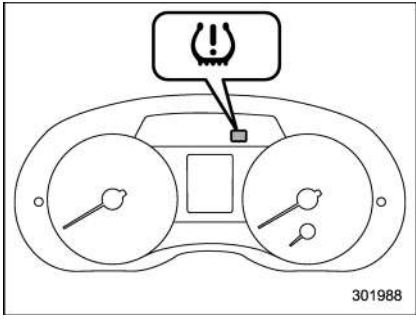

Low tire pressure warning light (type A)

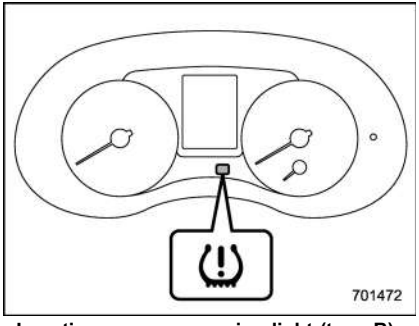

Low tire pressure warning light (type B)

– CONTINUED –

The tire pressure monitoring system provides the driver with a warning message when tire pressure is severely low.

The tire pressure monitoring system will activate only when the vehicle is driven at speeds above 20 mph (32 km/h). Also, this system may not react immediately to a sudden drop in tire pressure (for example, a blow-out caused by running over a sharp object).

⚠ WARNING

- **If the low tire pressure warning light illuminates while driving, never brake suddenly. Instead, perform the following procedure. Otherwise, an accident involving serious vehicle damage and serious personal injury could occur.**
  - **(1) Keep driving straight ahead while gradually reducing speed.**
  - **(2) Slowly pull off the road to a safe location.**
  - **(3) Check the pressure for all four tires and adjust the pressure to the COLD tire pressure shown on the tire placard. The tire placard is located on the door pillar on the driver's side.**

  Even when the vehicle is driven a very short distance, the tires get warm and their pressures increase accordingly. Be sure to let the tires cool thoroughly before adjusting their pressures to the standard values shown on the tire placard. Refer to "Tires and wheels" ☞11-21. The tire pressure monitoring system does not function when the vehicle is stationary. After adjusting the tire pressures, increase the vehicle speed to at least 20 mph (32 km/h) to start the TPMS rechecking of the tire inflation pressures. If the tire pressures are now above the severe low pressure threshold, the low tire pressure warning light should turn off a few minutes later.

  If this light still illuminates while driving after adjusting the tire pressure, a tire may have significant damage and a fast leak that causes the tire to lose air rapidly. If you have a flat tire, replace it with a spare tire as soon as possible.
- **When a spare tire is mounted or a wheel rim is replaced without the original pressure sensor/transmitter being transferred, the low tire pressure warning light will illuminate steadily after blinking for approximately one minute. This indicates the TPMS is unable to monitor all four road wheels. Contact your SUBARU dealer as soon as possible for tire and sensor replacement and/or system resetting.**
- **When a tire is repaired with liquid sealant, the tire pressure warning valve and transmitter may not operate properly. If a liquid sealant is used, contact your nearest SUBARU dealer or other qualified service shop as soon as possible. Make sure to replace the tire pressure warning valve and transmitter when replacing the tire. You may reuse the wheel if there is no damage to it and if the sealant residue is properly cleaned off. Do not inject any tire liquid or aerosol tire sealant into the tires, as this may cause a malfunction of the tire pressure sensors. If the light illuminates steadily after blinking for approximately one minute, promptly contact a SUBARU**

dealer to have the system inspected.

CAUTION

Do not place metal film or any metal parts in the cargo area. This may cause poor reception of the signals from the tire pressure sensors, and the tire pressure monitoring system will not function properly.

FCC ID: CWTWD1U781

NOTE

This device complies with part 15 of the FCC Rules. Operation is subject to the following two conditions: (1) This device may not cause harmful interference, and (2) this device must accept any interference received, including interference that may cause undesired operation.

FCC CAUTION

Changes or modifications not expressly approved by the party responsible for compliance could void the user's authority to operate the equipment.

Parking your vehicle

■ Parking brake

To set the parking brake, depress the brake pedal firmly and hold it down until the parking brake lever is fully pulled up.

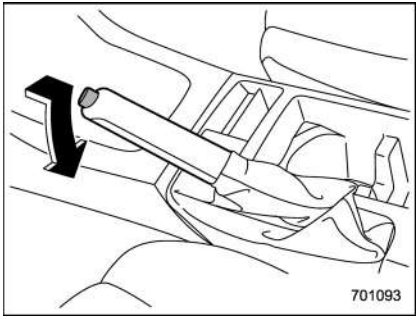

To release the parking brake, pull the lever up slightly, press the release button, then lower the lever while keeping the button pressed.

When the parking brake is set while the engine is running, the parking brake warning light illuminates. After starting the vehicle, be sure that the warning light has turned off before the vehicle is driven. Refer to "Brake system warning light (red)" ☞3-21.

CAUTION

Never drive while the parking brake is set because this will cause unnecessary wear on the brake linings. Before starting to drive, always make sure that the parking brake has been fully released.

■ Parking tips

When parking your vehicle, always perform the following items.

- Apply the parking brake firmly.
- For MT models, put the shift lever in the "1" (1st) for upgrade or "R" (Reverse) for a downgrade.
- For CVT models, put the select lever in the "P" (Park) position.

Never rely on the mechanical friction of the transmission alone to hold the vehicle.

– CONTINUED –

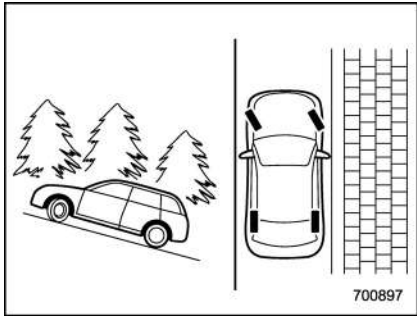

When parking on a hill, always turn the steering wheel. When the vehicle is headed up the hill, the front wheels should be turned away from the curb.

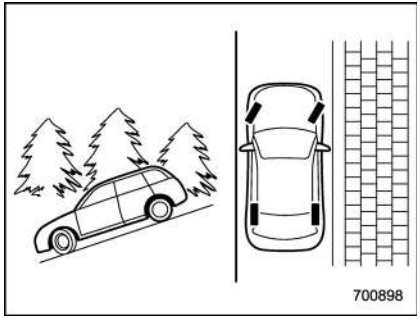

When facing downhill, the front wheels should be turned into the curb.

WARNING

- **Never leave unattended children or pets in the vehicle. They could accidentally injure themselves or others through inadvertent operation of the vehicle. Also, on hot or sunny days, the temperature in a closed vehicle could quickly become high enough to cause severe or possibly fatal injuries to people.**
- **Do not park the vehicle over flammable materials such as dry grass, waste paper or rags, as they may burn easily if they come near hot engine or exhaust system parts.**
- **Be sure to stop the engine if you take a nap in the vehicle. If engine exhaust gas enters the passenger compartment, occupants in the vehicle could die from carbon monoxide (CO) contained in the exhaust gas.**

CAUTION

- **If your vehicle has a front underspoiler and rear underspoiler (both optional), pay attention to blocks and other obstructions on the ground when parking. The underspoilers could be damaged by contact with them.**
- **The braking power of the parking brake may not be sufficient when stronger braking power is needed (e.g., when parking on a steep slope while towing a trailer).**

Hill start assist system

WARNING

- **The Hill start assist system is a device only for helping the driver to START the vehicle on an uphill grade. To prevent accidents when the vehicle is parked on a slope, be sure to firmly set the parking brake. When setting the parking brake, make sure that the vehicle remains stationary when the clutch pedal (MT models) and brake pedal (both MT and CVT models) are released.**
- **Do not turn the ignition switch to the "LOCK"/"OFF" position while the Hill start assist system is operating. The Hill start assist system will be deactivated and may lead to an accident.**

The Hill start assist system is a device to make the following vehicle operations easier.

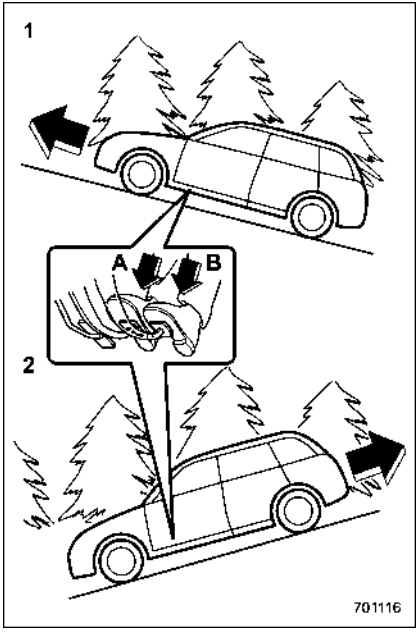

1) Starting forward facing uphill
2) Starting backward facing downhill
A) Brake pedal (both MT models and CVT models)
B) Clutch pedal (MT models only)

In both these cases, the Hill start assist system operates under the following conditions.

- when the clutch pedal is depressed while the brake pedal is also depressed (MT models)
- when the vehicle has stopped with the brake pedal depressed (CVT models)

Braking power is maintained temporarily (for approximately 2 seconds) by the Hill start assist system after the brake pedal is released. The driver is therefore able to start the vehicle in the same way as on a level grade, just using the clutch pedal (MT models only) and accelerator pedal (all models).

If the braking power of the Hill start assist system is insufficient after the brake pedal is released, apply more braking power by depressing the brake pedal again.

The Hill start assist system may not operate on slight grades. Also, the Hill start assist system does not operate in the following cases.

– CONTINUED –

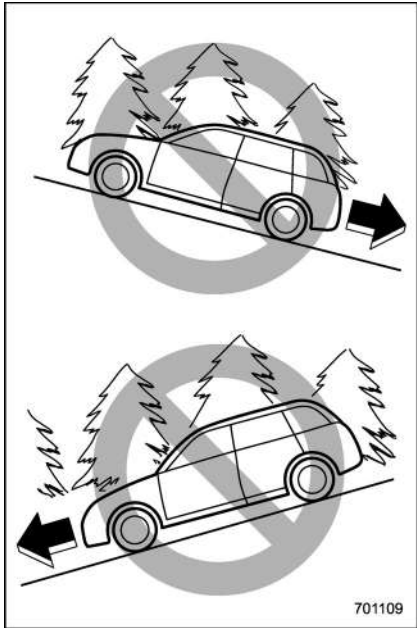

- when starting backward facing uphill
- when starting forward facing downhill
- while the parking brake is applied
- while the ignition switch is in the “ACC” or “LOCK”/“OFF” position
- while the Hill start assist warning light/ Hill start assist OFF indicator light is illuminated

When using the Hill start assist system, a braking effect may be felt even after the brake pedal has been released. However, for MT models, this braking effect should disappear once the clutch pedal is released.

CAUTION

The braking power of the Hill start assist system may not be sufficient when strong braking power is needed (e.g., while towing a trailer).

NOTE

A slight jolt may be felt when the vehicle begins to move forward after being reversed.

■ To activate/deactivate the Hill start assist system

CAUTION

While the Hill start assist system is deactivated, when starting on an uphill grade, braking power is not maintained if the brake pedal is released. Start on an uphill grade by using the parking brake.

You can activate/deactivate the Hill start assist system according to the following procedure.

NOTE

If you make an error when performing any steps in the following procedure, place the ignition switch in the “LOCK”/“OFF” position once and then start over again.

▼ To deactivate

1. Park your vehicle in a flat and safe location and apply the parking brake.
2. Turn the ignition switch to the “LOCK”/“OFF” position.
3. Restart the engine.

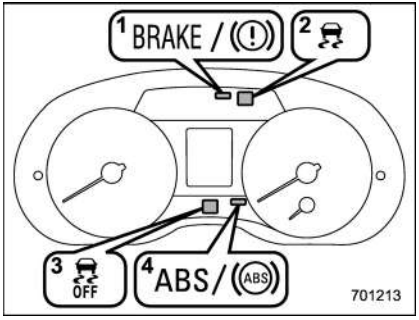

Type A

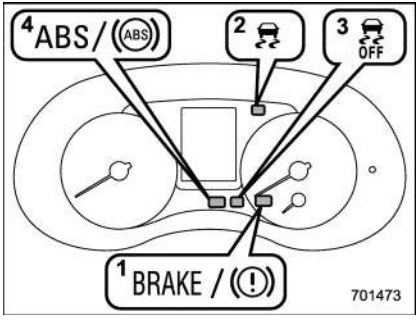

Type B

4. Confirm the following items.
   (1) The brake system warning light illuminates.
   (2) The Vehicle Dynamics Control warning light turns off.
   (3) The Vehicle Dynamics Control OFF indicator light turns off.
   (4) The ABS warning light turns off.

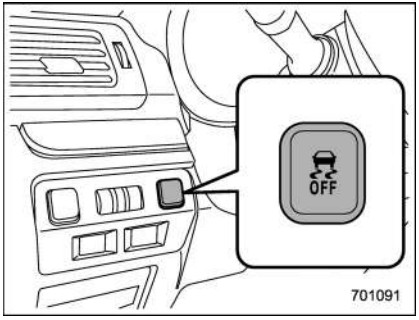

Vehicle Dynamics Control OFF switch

5. Press the Vehicle Dynamics Control OFF switch and hold it until the Vehicle Dynamics Control OFF indicator light "OFF" on the combination meter illuminates for 30 seconds and then turns off.
6. Within 5 seconds after the Vehicle Dynamics Control OFF indicator light turns off, release the Vehicle Dynamics Control OFF switch.

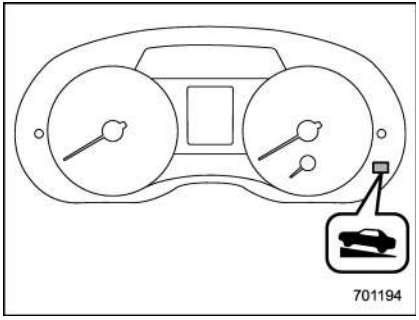

Hill start assist OFF indicator light (type A)

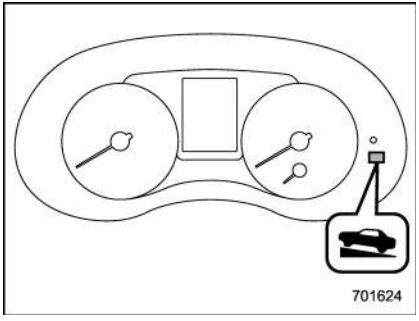

Hill start assist OFF indicator light (type B)

7. Within 2 seconds after releasing the Vehicle Dynamics Control OFF switch, press the Vehicle Dynamics Control OFF switch once again. Then the Hill start

– CONTINUED –

assist OFF indicator light blinks.

8. Turn the ignition switch to the “LOCK”/“OFF” position. The hill start assist system has now been deactivated.

NOTE

While the Hill start assist system is deactivated, the Hill start assist OFF indicator light blinks.

▼ To activate

When the procedure to deactivate the Hill start assist system is performed again, the system is activated. When the Hill start assist system is activated, the Hill start assist OFF indicator light turns off.

■ Hill start assist warning light/ Hill start assist OFF indicator light

Refer to “Hill start assist warning light/Hill start assist OFF indicator light” ☞3-22.

Cruise control (if equipped)

NOTE

For models with EyeSight system: Refer to the Owner’s Manual supplement for the EyeSight system.

Cruise control enables you to maintain a constant vehicle speed without holding your foot on the accelerator pedal and it is operative when the vehicle speed is 25 mph (40 km/h) or more.

⚠ WARNING

Do not use the cruise control under any of the following conditions. These may cause loss of vehicle control.

- **driving up or down a steep grade**
- **driving on slippery or winding roads**
- **driving in heavy traffic**
- **towing a trailer**

NOTE

Make sure the cruise control system is turned off when the cruise control is not in use to avoid unintentionally setting of the cruise control.

■ To set cruise control

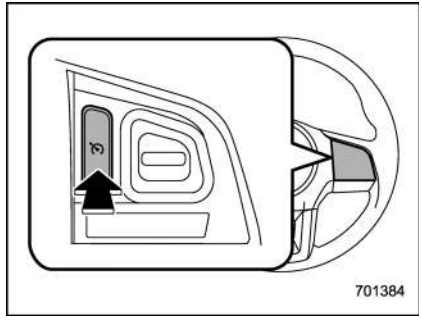

Cruise control main button

1. Press the cruise control main button.

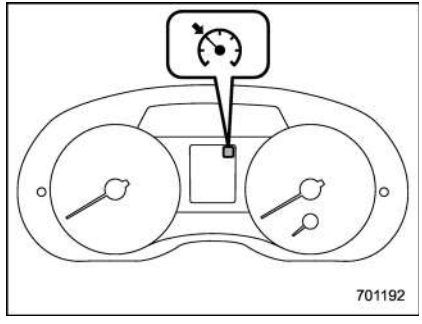

Cruise control indicator light (type A)

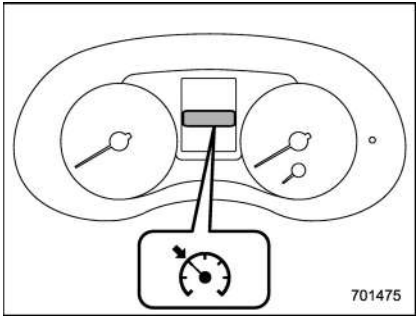

Cruise control indicator light (type B)

The cruise control indicator light on the combination meter will illuminate.

2. Depress the accelerator pedal until the vehicle reaches the desired speed.

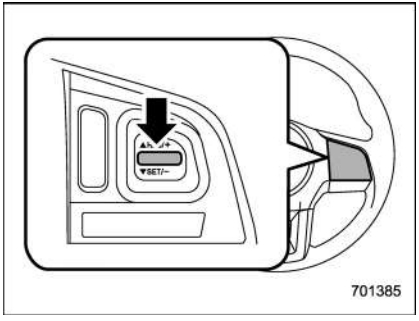

3. Press the “RES/SET” switch to the “SET” side and release it. Then release the accelerator pedal.

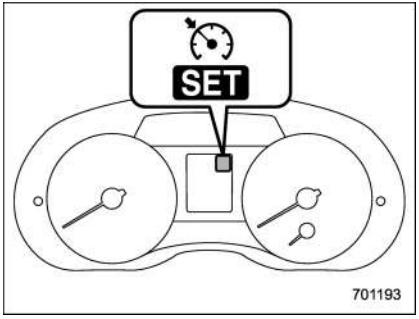

Cruise control set indicator light (type A)

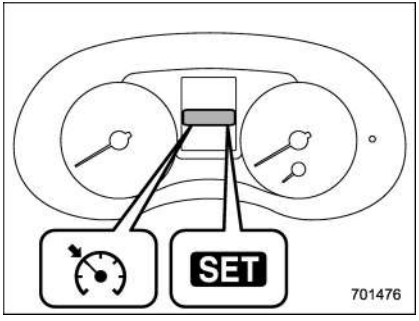

Cruise control set indicator light (type B)

At this time, the cruise control set indicator light is illuminated in the combination meter.

The vehicle will maintain the desired speed.

Vehicle speed can be temporarily increased while driving with the cruise control activated. Simply depress the accelerator pedal to accelerate the vehicle. When the accelerator pedal is released, the vehicle will return to and maintain the previous cruising speed.

■ To temporarily cancel the cruise control

The cruise control can be temporarily canceled in the following ways.

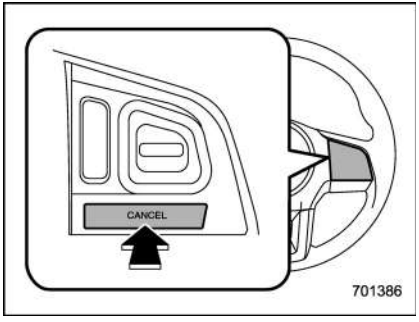

- Press the “CANCEL” button.
- Depress the brake pedal.
- Depress the clutch pedal (MT models

– CONTINUED –

only).

⚠ WARNING

For CVT models, you can cancel the cruise control by shifting the select lever into the “N” position. However, do not shift the lever into the “N” position while driving except in case of emergency. If the select lever is shifted into the “N” position, the engine brake will no longer work. This could result in an accident.

The cruise control set indicator light in the combination meter turns off when the cruise control is canceled.

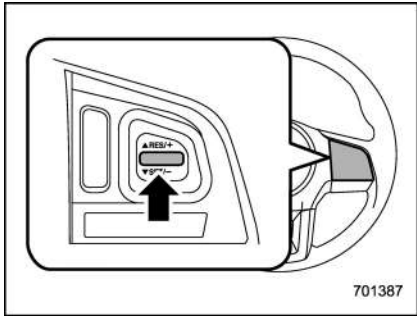

To resume the cruise control after it has been temporarily canceled and with vehicle speed of approximately 20 mph (30 km/h) or more, press the “RES/SET” switch to the “RES” side to return to the original cruising speed automatically.

The cruise control set indicator light in the combination meter will automatically illuminate at this time.

■ To turn off the cruise control

There are two ways to turn off the cruise control:

- Press the cruise control main button again.
- Turn the ignition switch to the “ACC” or “LOCK”/“OFF” position (but only when the vehicle is completely stopped).

■ To change the cruising speed

▼ To increase the speed (by the “RES/SET” switch)

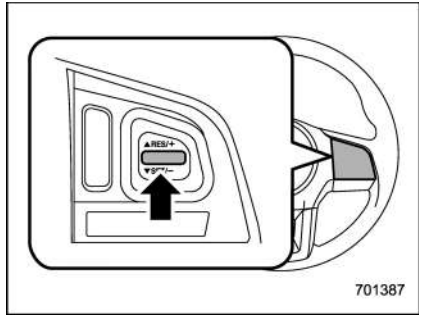

Press the “RES/SET” switch to the “RES” side and hold it until the vehicle reaches the desired speed. Then, release the switch. The vehicle speed at that moment will be memorized and treated as the new set speed.

U.S.-spec. models

When the difference between the actual vehicle speed and the set speed is small, the set speed can be increased 1 mph (1.6 km/h) each time by pressing the “RES/SET” switch to the “RES” side quickly.

Except U.S.-spec. models

When the difference between the actual vehicle speed and the set speed is small, the set speed can be increased 1 km/h each time by pressing the “RES/SET” switch to the “RES” side quickly.

▼ **To increase the speed (by accelerator pedal)**

1. Depress the accelerator pedal to accelerate the vehicle to the desired speed.

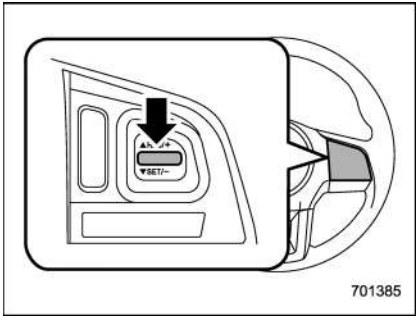

2. Press the “RES/SET” switch to the “SET” side once. Now the desired speed is set and the vehicle will keep running at that speed without depressing the accelerator pedal.

NOTE

- **U.S.-spec. models**

If the difference between the actual vehicle speed when the switch is pressed and the speed last time you set is small, the vehicle speed will be lowered by 1 mph (1.6 km/h). This occurs because the cruise control system regards this operation as that intended to decrease the vehicle speed.

- **Except U.S.-spec. models**

If the difference between the actual vehicle speed when the switch is pressed and the speed last time you set is small, the vehicle speed will be lowered by 1 km/h. This occurs because the cruise control system regards this operation as that intended to decrease the vehicle speed.

▼ **To decrease the speed (by the “RES/SET” switch)**

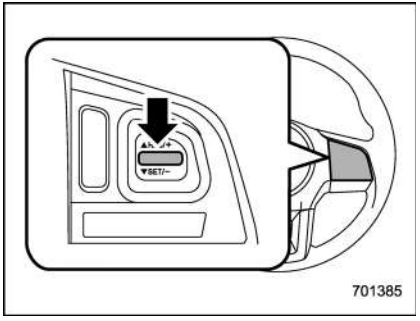

Press the “RES/SET” switch to the “SET” side and hold it until the vehicle reaches the desired speed. Then, release the switch. The vehicle speed at that moment will be memorized and treated as the new set speed.

U.S.-spec. models

When the difference between the actual vehicle speed and the set speed is small, the set speed can be lowered 1 mph (1.6 km/h) each time by pressing the “RES/SET” switch to the “SET” side quickly.

Except U.S.-spec. models

When the difference between the actual vehicle speed and the set speed is small, the set speed can be lowered 1 km/h each

– CONTINUED –

time by pressing the “RES/SET” switch to the “SET” side quickly.

NOTE

If the “RES/SET” switch is repeatedly operated quickly to the “SET” side, the set vehicle speed displayed in the combination meter becomes the low speed setting. However, when the set vehicle speed is set to a speed much lower than the actual vehicle speed, the set speed may be reset to the actual vehicle speed.

▼ To decrease the speed (by brake pedal)

1. Depress the brake pedal to release cruise control temporarily.

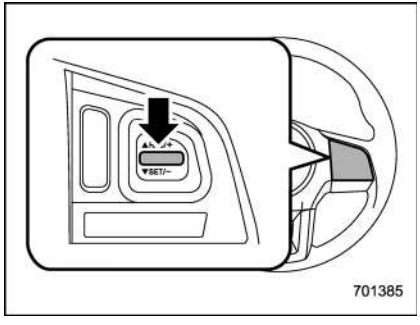

2. When the speed decreases to the desired speed, press the “RES/SET” switch to the “SET” side once. Now the desired speed is set and the vehicle will keep running at that speed without depressing the accelerator pedal.

■ Cruise control indicator light

Refer to “Cruise control indicator light” ☞3-31.

■ Cruise control set indicator light

Refer to “Cruise control set indicator light” ☞3-31.

BSD/RCTA (if equipped)

The BSD/RCTA consists of rear radar with Blind Spot Detection and Rear Cross Traffic Alert.

These functions enable the system to detect objects or vehicles to the rear, drawing attention to the driver when changing a lane or when driving in reverse.

⚠ WARNING

The driver is responsible for driving safely. Always be sure to check the surroundings with your eyes when changing lanes or reversing the vehicle.

The system is designed to assist the driver in changing lanes or reversing safely by monitoring the rear and side areas of the vehicle. However, you cannot rely on this system alone in assuring the safety during a lane change or reversing. Overconfidence in this system could result in an accident and lead to serious injury or death. Since the system operation has various limitations, the flashing or illumination of the BSD/RCTA approach indicator light

may be delayed or it may not operate at all even when a vehicle is present in a neighboring lane or approaching from either side.

The driver is responsible for paying attention to the rear and side areas of the vehicle.

■ System features

BSD/RCTA consists of the following functions.

- To detect a vehicle in a blind spot on an adjacent lane or a vehicle approaching at high speed while driving the vehicle (Blind Spot Detection)
- To detect a vehicle approaching from the right or left while reversing the vehicle (Rear Cross Traffic Alert)

The system uses radar sensors for the above functions.

NOTE

The BSD/RCTA radar sensor has been certified by the radio wave related laws of the U.S. When driving in other countries, certification of the country where the vehicle is driven must be obtained. For certification in the U.S., refer to "Certification for the BSD/RCTA" ☞7-55.

▼ Blind Spot Detection (BSD)

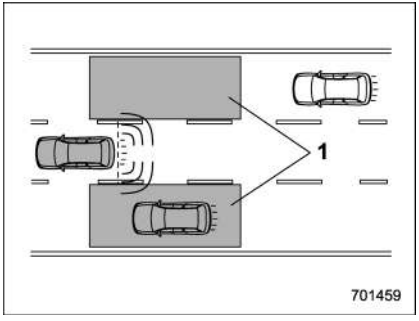

1) Operating range

The system warns the driver of dangers as follows.

- If the system detects vehicles in the driver's blind spots, the BSD/RCTA approach indicator light(s) on the outside mirror(s) will illuminate.
- If the driver operates the turn signal lever to the side where the BSD/RCTA approach indicator light is illuminated, the corresponding BSD/RCTA approach indicator light will flash.

▽ Lane Change Assist (LCA)

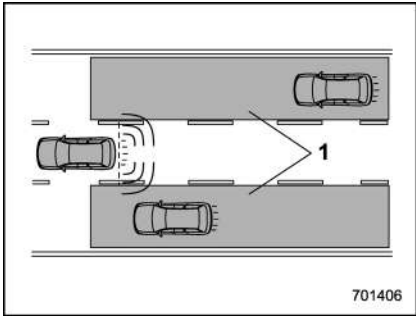

1) Operating range

The system warns the driver of dangers as follows.

- If the system detects vehicles approaching at high speeds in the neighboring lanes, the BSD/RCTA approach indicator light(s) on the outside mirror(s) will illuminate.
- If the driver operates the turn signal lever to the side where the BSD/RCTA approach indicator light is illuminated, the corresponding BSD/RCTA approach indicator light will flash.

– CONTINUED –

▼ Rear Cross Traffic Alert (RCTA)

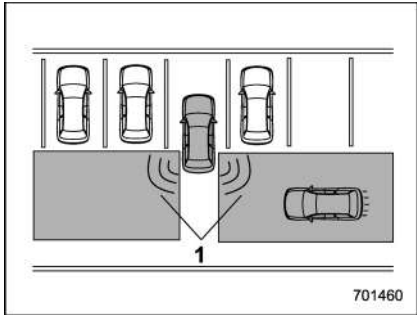

1) Operating range

The system notifies the driver of another vehicle approaching from either side when driving in reverse. This feature helps the driver check the rear and side areas of the vehicle when moving backward.

If the system detects a vehicle approaching from either side while moving backward, it warns the driver of dangers in the following way.

- The BSD/RCTA approach indicator light(s) on the outside mirror(s) flashes.
- A warning buzzer sounds.

▽ Limitations of the detectability of RCTA

Since the detectability of RCTA is limited, the RCTA may not operate properly in parking areas in which the parking spaces are drawn diagonally to the driving lanes.

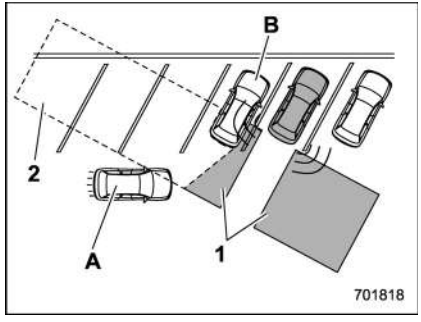

Example 1

1) The detection range of the radar sensors
2) Area out of detection range of the radar sensors

A) Vehicle that may not be detected
B) Parked vehicle

⚠ WARNING

An approaching vehicle (A) may not be detected because the detection range is limited by the parked vehicle (B). Always be sure to check the surroundings with your eyes when reversing the vehicle.

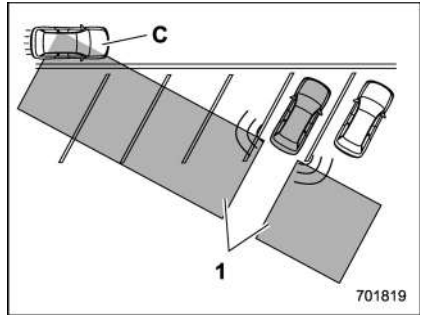

Example 2

1) The detection range of the radar sensors

C) Vehicle that may be detected

NOTE

The system may detect that a vehicle (C) is passing in front of your vehicle. Always be sure to check the surroundings with your eyes when reversing the vehicle.

■ System operation

▼ Operating conditions

The BSD/RCTA will operate when all of the following conditions are met.

- The ignition switch is in the “ON” position.
- The BSD/RCTA warning indicator and BSD/RCTA OFF indicator are turned off.
- The vehicle is driven at speeds above 6 mph (10 km/h) (except when reversing).
- The shift lever/select lever is in the “R” position (RCTA only).

The BSD/RCTA will not operate in the following situations.

- The BSD/RCTA OFF indicator is on.
- The vehicle speed is below 6 mph (10 km/h) even when the BSD/RCTA OFF indicator remains off (except when reversing).

NOTE

- **When a malfunction occurs in the system (including the BSD/RCTA approach indicator light), the BSD/RCTA will stop operating and the BSD/RCTA warning indicator will appear.**
- **If the BSD/RCTA warning indicator appears, exercise proper caution. For details, refer to “BSD/RCTA warning indicator” ☞7-54.**
- **In the following cases, the BSD/RCTA will temporarily stop operating (or may stop operating) and the BSD/RCTA warning indicator will appear.**
  - **– When the radar sensor becomes significantly misaligned (If the orientation of the radar sensor is shifted for any reason, readjustment is required. Have the sensor adjusted at a SUBARU dealer.)**
  - **– When a large amount of snow or ice sticks to the rear bumper surface around the radar sensors**
  - **– When the vehicle is driven on a snow-covered road or in an environment in which there are no objects around (such as in a desert) for a prolonged period of time**
  - **– When the temperature around the radar sensors increases excessively due to long driving on uphill grades in the summer, etc.**
  - **– When the temperature around the radar sensors becomes extremely low**
  - **– When the vehicle battery voltage lowers**
  - **– When the vehicle voltage exceeds the battery voltage rating**

The BSD/RCTA will resume operation once these conditions are corrected, and the BSD/RCTA warning indicator will disappear. However, if the BSD/RCTA warning indicator appears for a prolonged period of time, have the system inspected at a SUBARU dealer as soon as possible.

- **The detectability of the radar sensors is restricted. The BSD/RCTA detection may be impaired and the system may not operate properly under the following conditions.**
  - **– When the rear bumper around the radar sensors is distorted**
  - **– When ice, snow or mud adheres to the rear bumper surface around the radar sensors**
  - **– When stickers, etc. are affixed on the areas of the radar sensors on the rear bumper**
  - **– During adverse weather conditions such as rain, snow or fog**
  - **– When driving on wet roads such as snow-covered roads and through puddles**
- **The radar sensors may not detect or may have difficulty detecting the following.**
  - **– Small motorcycles, bicycles, pedestrians, stationary objects on the road or road side, etc.**
  - **– Vehicles with body shapes that the radar may not reflect (vehicles**

– CONTINUED –

with a low body height such as sports cars or a trailer with no cargo)

– Vehicles that are not approaching your vehicle even though they are in the detection area (either on a neighboring lane to the rear or beside your vehicle when reversing) (The system determines the presence of approaching vehicles based on data detected by the radar sensors.)

– Vehicles traveling at significantly different speeds

– Vehicles driving in parallel at almost the same speed as your vehicle for a prolonged time

– Oncoming vehicles

– Vehicles in a lane beyond the neighboring lane

– Vehicles travelling at a significantly lower speed that you are trying to overtake

● On a road with extremely narrow lanes, the system may detect vehicles driving in a lane next to the neighboring lane.

■ BSD/RCTA approach indicator light/warning buzzer

While the BSD/RCTA is active, the following item(s) will operate to alert the driver:

● The BSD/RCTA approach indicator light (when there are vehicles in the neighboring lanes).

● The BSD/RCTA approach indicator light and warning buzzer (when a vehicle is approaching from the left or right side while your vehicle is reversing)

▼ BSD/RCTA approach indicator light

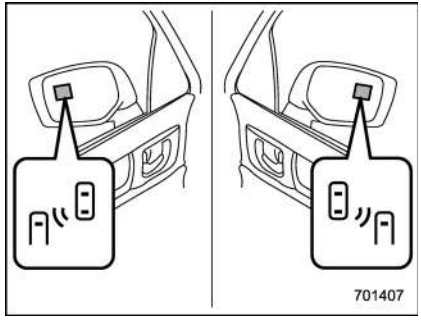

BSD/RCTA approach indicator light

It is mounted on each side of the outside mirrors.

The indicator light will illuminate when a vehicle approaching from behind is detected.

The indicator light will flash to warn the driver of dangers under the following conditions.

● While the indicator light is illuminating, if the turn signal lever is operated toward the side in which this light turned on

● When reversing the vehicle while the system detects a vehicle approaching from either side

▽ BSD/RCTA approach indicator light dimming function

When the headlights are turned on, the brightness of the BSD/RCTA approach indicator light will be reduced.

NOTE

● You may have difficulty seeing the BSD/RCTA approach indicator light under the following conditions.

– When sunlight shines directly on it

– When the headlight beams from a vehicle traveling behind shines directly on it

● While the illumination brightness control dial is in the fully upward position, even if the headlights are turned on, the brightness of the BSD/RCTA approach indicator light will not be reduced. For details about the

illumination brightness control dial, refer to "Illumination brightness control" ☞3-92.

▼ BSD/RCTA approach warning buzzer (only when reversing)

A warning buzzer sounds along with flashing of the BSD/RCTA approach indicator light to warn the driver of dangers.

The setting of the warning buzzer volume can be changed by operating the multi information display of the combination meter. For details, refer to "BSD/RCTA" ☞3-42.

▼ Safety tips regarding the BSD/RCTA approach indicator light/warning buzzer

- In the following cases, operation of the BSD/RCTA approach indicator light and the warning buzzer may be delayed or the system may fail to issue these warnings.
  - When a vehicle moves to the neighboring lane from a lane next to the neighboring lane
  - When driving on a steep incline or on repeated sharp uphill and downhill grades
  - When going beyond a pass
  - When both your vehicle and a vehicle driving on a neighboring lane are driving on the far side of each lane.
  - When several narrowly-spaced vehicles are approaching in a row
  - In low radius bends (tight bends or when making turns at an intersection)
  - When there is a difference in height between your lane and the neighboring lane
  - Immediately after the BSD/RCTA is activated by pressing the BSD/RCTA OFF switch
  - Immediately after the shift lever/select lever is shifted to the "R" position
  - When extremely heavy cargo is loaded in the cargo area
- During reversing, operation of the BSD/RCTA approach indicator light and the warning buzzer may be delayed or the system may fail to issue these warnings under the following conditions.
  - When backing out of an angled parking space
  - When a large-sized vehicle is parked next to your vehicle (That vehicle prevents the propagation of radar waves.)
  - When reversing on sloped roads
  - When reversing at a high speed

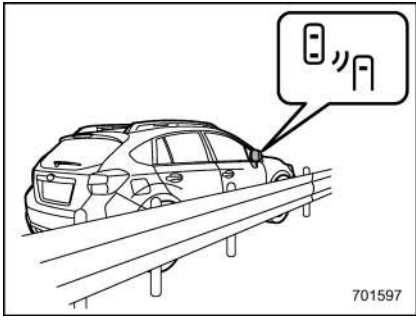

- The BSD/RCTA approach indicator light may illuminate when driving close to solid objects on the road or road side (such as guardrails, tunnels and sidewalls).
- The BSD/RCTA approach indicator light may flash when turning at an intersection in urban areas or a multilane intersection.
- The BSD/RCTA approach indicator light may flash and the warning buzzer may sound if a building or a wall exists in the reversing direction.
- In the following cases, the system may detect a vehicle driving two lanes away from your vehicle.
  - When you are driving on the near side of its lane from the corresponding vehicle

– CONTINUED –

– When the vehicle driving two lanes away is driving on the near side of its lane from your vehicle

■ BSD/RCTA warning indicator

▼ System temporary stop indicator

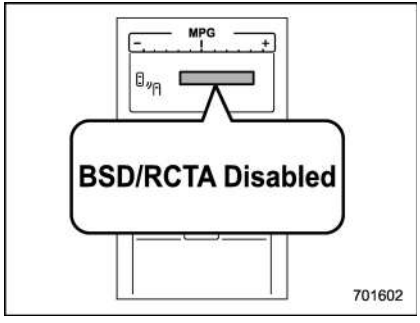

System temporary stop indicator

This indicator appears when the system is used under the following conditions.

- Extremely high or low temperatures
- When abnormal voltage exists for the vehicle battery
- When the radar sensor is significantly misaligned

Once the above conditions are corrected, the system will recover from the temporary stop condition and the indicator will disappear.

If the indicator remains displayed for a prolonged time, have the system inspected at a SUBARU dealer.

▼ System temporary stop indicator due to reduced radar sensitivity

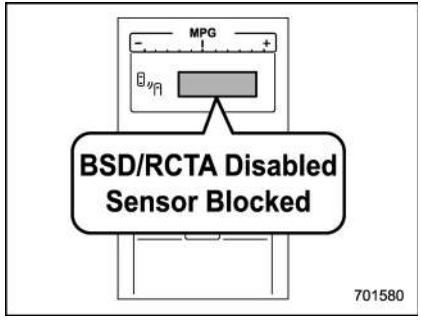

System temporary stop indicator due to reduced radar sensitivity

This indicator appears when the detectability of the radar sensors is reduced. Once the condition is corrected, the system will recover from the temporary stop condition and the indicator will disappear.

If the indicator remains displayed for a prolonged time, have the system inspected at a SUBARU dealer.

▼ System malfunction indicator

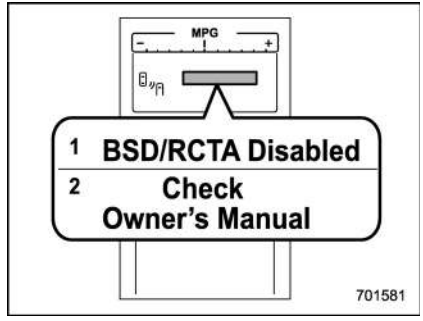

System malfunction indicator

1) At first, this message will appear
2) Then this message will appear

This indicator appears when a malfunction occurs in the system. Contact a SUBARU dealer and have the system inspected.

■ BSD/RCTA OFF switch

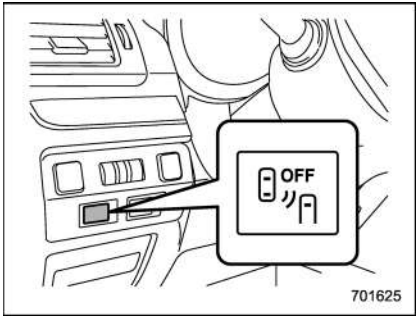

BSD/RCTA OFF switch

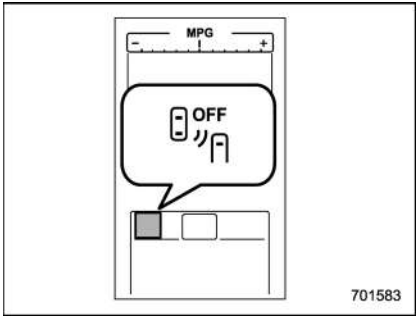

BSD/RCTA OFF indicator

If the BSD/RCTA OFF switch is pressed, the BSD/RCTA OFF indicator appears on the multi information display of the combination meter, and the BSD/RCTA is deactivated.

Press the switch again to activate the BSD/RCTA. The BSD/RCTA OFF indicator will disappear.

NOTE

- **In the following cases, the system may not operate properly due to blocked radar waves. Press the BSD/RCTA OFF switch to deactivate the system.**
  - **When towing a trailer**
  - **When a bicycle carrier or other item is fitted to the rear of the vehicle**
  - **When using a chassis dynamometer or free roller device, etc.**
  - **When running the engine and making the wheels rotate while lifting up the vehicle**
- **If the ignition switch is turned to the "LOCK"/"OFF" position, the last known status of the system is maintained. For example, if the ignition switch is turned to the "LOCK"/"OFF" position with the BSD/RCTA deactivated, the BSD/RCTA will remain deactivated the next time the ignition switch is turned to the "ON" position.**
- **If the vehicle battery is disconnected due to situations such as battery terminal or fuse replacement, after the battery is reconnected, the BSD/RCTA will be activated.**

■ Certification for the BSD/RCTA

U.S.-spec. models:

FCC ID: OAYSRR2A

⚠ CAUTION

FCC WARNING

Changes or modifications not expressly approved by the party responsible for compliance could void the user's authority to operate the equipment.

This device complies with part 15 of the FCC Rules. Operation is subject to the following two conditions: (1) This device may not cause harmful interference, and (2) this device must accept any interference received, including interference that may cause undesired operation.

– CONTINUED –

Canada-spec. models:

NOTE

This device complies with Industry Canada's licence-exempt RSSs. Operation is subject to the following two conditions: (1) This device may not cause interference; and (2) This device must accept any interference, including interference that may cause undesired operation of the device.

REMARQUE

Le présent appareil est conforme aux CNR d'Industrie Canada applicables aux appareils radio exempts de licence. L'exploitation est autorisée aux deux conditions suivantes: (1) l'appareil ne doit pas produire de brouillage; (2) l'utilisateur de l'appareil doit accepter tout brouillage radioélectrique subi, même si le brouillage est susceptible d'en compromettre le fonctionnement.

203161

■ Handling of radar sensors

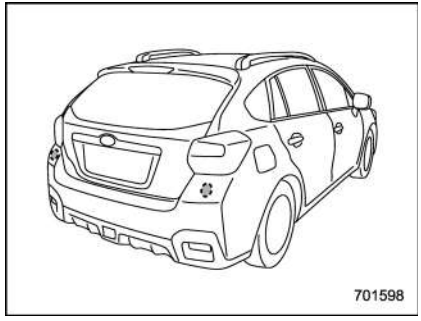

Radar sensors

The radar sensors, one on each side of the vehicle, are mounted inside the rear bumper.

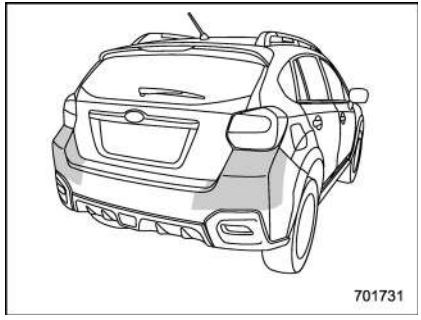

CAUTION

To ensure correct operation of the BSD/RCTA, observe the following precautions.

- **Always keep the bumper surface near the radar sensors clean.**
- **Do not affix any stickers or other items on the bumper surface near the radar sensors. For details, consult your SUBARU dealer.**
- **Do not modify the bumper near the radar sensors.**
- **Do not paint the bumper near the radar sensors.**
- **Do not expose the bumper near the radar sensors to strong impacts. If a sensor becomes misaligned, a system malfunction may occur, including the inability to detect vehicles entering the detection areas. If any strong shock is applied to the bumper, be sure to contact your SUBARU dealer for inspection.**
- **Do not disassemble the radar sensors.**

NOTE

If the radar sensors require repair or replacement, or the bumper area around the radar sensors requires repair, paintwork or replacement, contact your SUBARU dealer for assistance.

New vehicle break-in driving – the first 1,000 miles (1,600 km) 8-2
Fuel economy hints 8-2
Engine exhaust gas (carbon monoxide)..... 8-2
Catalytic converter 8-3
Periodic inspections 8-4
Driving in foreign countries 8-4
Driving tips for AWD models..... 8-4
Off road driving 8-6
Before driving 8-6
During driving 8-6
After driving..... 8-7
Winter driving 8-8
Operation during cold weather..... 8-8
Driving on snowy and icy roads 8-9
Corrosion protection 8-10
Snow tires 8-10
Tire chains 8-11
Rocking the vehicle 8-11
Loading your vehicle..... 8-12
Vehicle capacity weight..... 8-13
GVWR and GAWR (Gross Vehicle Weight Rating and Gross Axle Weight Rating) 8-13
Roof rail 8-14
Trailer hitch (dealer option)..... 8-15
Connecting a trailer 8-16
If not towing a trailer..... 8-17
Trailer towing 8-17
Warranties and maintenance 8-17
Maximum load limits 8-18
Trailer Hitches 8-21
Connecting a trailer 8-22
Trailer towing tips 8-23

New vehicle break-in driving – the first 1,000 miles (1,600 km)

The performance and long life of your vehicle are dependent on how you handle and care for your vehicle while it is new. Follow these instructions during the first 1,000 miles (1,600 km):

- Do not race the engine. And do not allow engine speed to exceed 4,000 rpm except in an emergency.
- Do not drive at one constant engine or vehicle speed for a long time, either fast or slow.
- Avoid starting suddenly and rapid acceleration, except in an emergency.
- Avoid hard braking, except in an emergency.

The same break-in procedures should be applied to an overhauled engine, newly mounted engine or when brake pads or brake linings are replaced with new ones.

Fuel economy hints

The following suggestions will help to save fuel.

- Select the proper gear position for the speed and road conditions.
- Avoid sudden acceleration or deceleration. Always accelerate gently until you reach the desired speed. Then try to maintain that speed for as long as possible.
- Do not pump the accelerator and avoid racing the engine.
- Avoid unnecessary engine idling.
- Keep the engine properly tuned.
- Keep the tires inflated to the correct pressure shown on the tire placard, which is located under the door latch on the driver's side. Low pressure will increase tire wear and fuel consumption.
- Use the air conditioner only when necessary.
- Keep the front and rear wheels in proper alignment.
- Avoid carrying unnecessary luggage or cargo.

Engine exhaust gas (carbon monoxide)

WARNING

- **Never inhale engine exhaust gas. Engine exhaust gas contains carbon monoxide, a colorless and odorless gas which is dangerous, or even lethal, if inhaled.**
- **Always properly maintain the engine exhaust system to prevent engine exhaust gas from entering the vehicle.**
- **Never run the engine in a closed space, such as a garage, except for the brief time needed to drive the vehicle in or out of it.**
- **Avoid remaining in a parked vehicle for a lengthy time while the engine is running. If that is unavoidable, then use the ventilation fan to force fresh air into the vehicle.**
- **Always keep the front ventilator inlet grille free from snow, leaves or other obstructions to ensure that the ventilation system always works properly.**
- **If at any time you suspect that**

exhaust fumes are entering the vehicle, have the problem checked and corrected as soon as possible. If you must drive under these conditions, drive only with all windows fully open.

- **Keep the rear gate closed while driving to prevent exhaust gas from entering the vehicle.**

NOTE

Due to the expansion and contraction of the metals used in the manufacture of the exhaust system, you may hear a crackling sound coming from the exhaust system for a short time after the engine has been shut off. This sound is normal.

Catalytic converter

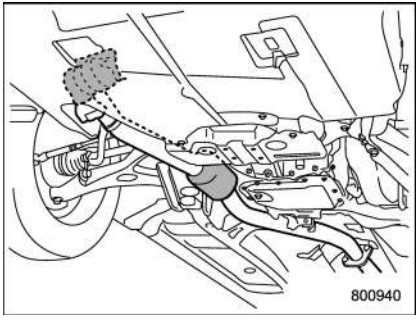

The catalytic converter is installed in the exhaust system. It serves as a catalyst to reduce HC, CO and NOx in exhaust gases, thus providing cleaner exhaust.

To avoid damage to the catalytic converter:

- Use only unleaded fuel. Even a small amount of leaded fuel will damage the catalytic converter.
- Never start the engine by pushing or pulling the vehicle.
- Avoid racing the engine.
- Never turn the ignition switch to the “OFF” position while the vehicle is moving.
- Keep your engine tuned-up. If you feel the engine running rough (misfiring, backfiring or incomplete combustion), have your vehicle checked and repaired by an authorized SUBARU dealer.
- Do not apply undercoating or rust prevention treatment to the heat shield of catalytic converter and the exhaust system.
- Do not drive with an extremely low fuel level.

⚠ WARNING

- **Avoid fire hazards. Do not drive or park the vehicle anywhere near flammable materials (e.g., grass, paper, rags or leaves), because the catalytic converter operates at very high temperatures.**
- **Keep everyone and flammable materials away from the exhaust pipe while the engine is running. The exhaust gas is very hot.**

Periodic inspections

To keep your vehicle in the best condition at all times, always have the recommended maintenance services listed in the maintenance schedule in the "Warranty and Maintenance Booklet" performed at the specified time or mileage intervals.

Driving in foreign countries

When planning to use your vehicle in another country:

- Confirm the availability of the correct fuel. Refer to "Fuel requirements" ☞7-3.
- Comply with all regulations and requirements of each country.

Driving tips for AWD models

WARNING

- **Always maintain a safe driving speed according to the road and weather conditions in order to avoid having an accident on a sharp turn, during sudden braking or under other similar conditions.**
- **Always use the utmost care in driving – overconfidence because you are driving an All-Wheel Drive vehicle could easily lead to a serious accident.**
- **When replacing or installing tire (s), all four tires must be the same for following items.**

  (a) Size

  (b) Circumference

  (c) Speed symbol

  (d) Load index

  (e) Construction

  (f) Manufacturer

  (g) Brand (tread pattern)

  (h) Degrees of wear

  For the items (a) to (d), you must obey the specification that is

printed on the tire placard. The tire placard is located on the driver's door pillar.

If all of four tires are not the same for items (a) to (h), serious mechanical damage could occur to the drive train of your car, and affect the following.

— Ride

— Handling

— Braking

— Speedometer/Odometer calibration

— Clearance between the body and tires

It also may be dangerous and lead to loss of vehicle control, and it can lead to an accident.

⚠ CAUTION

If you use a temporary spare tire to replace a flat tire, be sure to use the original temporary spare tire stored in the vehicle. Using other sizes may result in severe mechanical damage to the drive train of your vehicle.

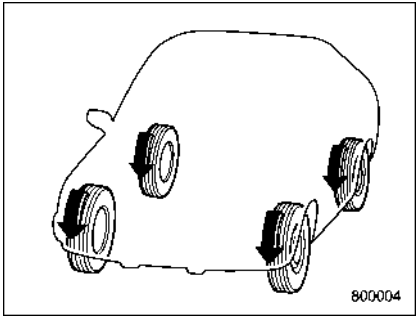

All-Wheel Drive distributes the engine power to all four wheels. AWD models provide better traction when driving on slippery, wet or snow-covered roads and when moving out of mud, dirt and sand. By shifting power between the front and rear wheels, SUBARU AWD can also provide added traction during acceleration and added engine braking force during deceleration.

Therefore, your SUBARU AWD vehicle may handle differently than an ordinary two wheel drive vehicle and it contains some features unique to AWD. For safety purposes as well as to avoid damaging the AWD system, you should keep the following tips in mind.

- An AWD model is better able to climb steeper roads under snowy or slippery conditions than a two wheel drive vehicle. There is little difference in handling, however, during extremely sharp turns or sudden braking. Therefore, when driving down a slope or turning corners, be sure to reduce your speed and maintain an ample distance from other vehicles.
- Always check the cold tire pressure before starting to drive. The recommended tire pressure is provided on the tire placard, which is located under the door latch on the driver's side.
- There are some precautions that you must observe when towing your vehicle. For detailed information, refer to "Towing" ☞9-13.

Off road driving

WARNING

- **Always maintain a safe driving speed according to the road and weather conditions in order to avoid having an accident on a sharp turn, during sudden braking or under other similar conditions.**
- **Always use the utmost care in driving – overconfidence because you are driving an All-Wheel Drive model could easily lead to a serious accident.**

CAUTION

Frequent driving of an AWD model under hard-driving conditions such as rough roads or off roads will necessitate more frequent replacement of the following items than that specified in the maintenance schedule described in the "Warranty and Maintenance Booklet".

- **Engine oil**
- **Brake fluid**
- **Manual transmission oil (MT models)**
- **Continuously variable transmission fluid (CVT models)**
- **Front differential gear oil (CVT models)**

Remember that damage done to your SUBARU while operating it off-road and not using common sense precautions such as those listed here is not eligible for warranty coverage.

Because of the AWD feature and higher ground clearance, you can drive your SUBARU on ordinary roads or off-road. But please keep in mind that an AWD SUBARU is a passenger car and is neither a conventional off-road vehicle nor an all-terrain vehicle. If you do take your SUBARU off-road, certain common sense precautions such as those in the following list should be taken.

■ Before driving

- Make certain that you and all of your passengers are wearing seatbelts.
- Carry some emergency equipment, such as a towing rope or chain, a shovel, wheel blocks, first aid kit and cell phone or citizens band radio.
- Secure all cargo carried inside the vehicle and make certain that it is not piled higher than the seatbacks. During sudden stops or jolts, unsecured cargo could be thrown around in the vehicle and cause injury. Do not pile heavy loads on the roof. Those loads raise the vehicle's center of gravity and make it more prone to tip over.
- Never equip your vehicle with tires larger than those specified in this manual.

■ During driving

General precautions:

- Drive carefully. Do not take unnecessary risks by driving in dangerous areas or over rough terrain.
- Slow down and employ extra caution at all times. When driving off-road, you will not have the benefit of marked traffic lanes, banked curves, traffic signs and the like.
- Do not drive across steep slopes. Instead, drive either straight up or straight down the slopes. A vehicle can much more easily tip over sideways than it can end over end. Avoid driving straight up or down slopes that are too steep.
- Avoid sharp turning maneuvers, especially at higher speeds.
- Do not grip the inside or spokes of the steering wheel. A bad bump could jerk the

wheel and injure your hands. Instead, drive with your fingers and thumbs on the outside of the rim.

- Do not drive or park over or near flammable materials such as dry grass or fallen leaves, as they may burn easily. The exhaust system is very hot while the engine is running and right after the engine stops. This could create a fire hazard.

Precautions when driving under especially dangerous situations:

- If driving through water, such as when crossing shallow streams:
  - First, check the depth of the water and the bottom of the stream bed for firmness.
  - Next, ensure that the bed of the stream is flat.
  - Then, drive slowly and completely through the stream. The water should be shallow enough that it does not reach the vehicle's undercarriage.
- Water entering the engine air intake or the exhaust pipe or water splashing onto electrical parts may damage your vehicle and may cause it to stall. Never drive through rushing water. Regardless of its depth, it can wash away the ground from under your tires, resulting in possible loss of traction and even vehicle rollover.
- If you must rock the vehicle to free it from sand or mud, depress the accelerator pedal slightly and move the shift lever/select lever back and forth between "1"/"D" and "R" repeatedly. Do not race the engine. For the best possible traction, avoid spinning the wheels when trying to free the vehicle.
- When the road surface is extremely slippery, you can obtain better traction by starting the vehicle with the transmission in 2nd than 1st (both for MT and CVT). For CVT models, refer to "Selection of manual mode" ☞7-26.

■ After driving

- Always check your brakes for effectiveness immediately after driving in sand, mud or water. Do this by driving slowly and stepping on the brake pedal. Repeat that process several times to dry out the brake discs and brake pads.
- After driving through tall grass, mud, rocks, sand, rivers, etc., check that there is no grass, bush, paper, rags, stones, sand, etc. adhering to or trapped on the underbody. Clear off any such matter from the underbody. If the vehicle is used with these materials trapped or adhering to the underbody, a mechanical breakdown or fire could occur.
- Wash the vehicle's underbody after off-road driving. Suspension components are particularly prone to dirt buildup, so they need to be washed thoroughly.

Winter driving

■ Operation during cold weather

▼ Maintenance

Carry some emergency equipment, such as a window scraper, a bag of sand, flares, a small shovel and jumper cables.

Check the battery and cables. Cold temperatures reduce battery capacity. The battery must be in good condition to provide enough power for cold winter starts.

It normally takes longer to start the engine in very cold weather conditions. Use an engine oil of a proper grade and viscosity for cold weather. Using heavy summer oil will make it harder to start the engine.

Keep the door locks from freezing by squirting them with deicer or glycerin.

Forcing a frozen door open may damage or separate the rubber weather strips around the door. If the door is frozen, use hot water to melt the ice, and afterwards thoroughly wipe the water away.

Use a windshield washer fluid that contains an antifreeze solution. Do not use engine antifreeze or other substitutes because they may damage the paint of the vehicle.

SUBARU Windshield Washer Fluid contains 58.5% methyl alcohol and 41.5% surfactant, by volume. Its freezing temperature varies according to how much it is diluted, as indicated in the following table.

Washer Fluid Concentration	Freezing Temperature
30%	**10.4°F (−12°C)**
50%	**−4°F (−20°C)**
100%	**−49°F (−45°C)**

In order to prevent freezing of washer fluid, check the freezing temperatures in the table above when adjusting the fluid concentration to the outside temperature.

If you fill the reservoir tank with a fluid with a different concentration from the one used previously, purge the old fluid from the piping between the reservoir tank and washer nozzles by operating the washer for a certain period of time. Otherwise, if the concentration of the fluid remaining in the piping is too low for the outside temperature, it may freeze and block the nozzles.

⚠ CAUTION

- **Adjust the washer fluid concentration appropriately for the outside temperature. If the concentration is inappropriate, sprayed washer fluid may freeze on the windshield and obstruct your view, and the fluid may freeze in the reservoir tank.**
- **State or local regulations on volatile organic compounds may restrict the use of methanol, a common windshield washer antifreeze additive. Washer fluids containing non-methanol antifreeze agents should be used only if they provide cold weather protection without damaging your vehicle's paint, wiper blades or washer system.**

▼ Before driving your vehicle

Before entering the vehicle, remove any snow or ice from your shoes because that could make the pedals slippery and driving dangerous.

While warming up the vehicle before driving, check that the accelerator pedal, brake pedal, and all other controls operate smoothly.

Clear away ice and snow that has accumulated under the fenders to avoid making steering difficult. During severe winter driving, stop when and where it is safe to do so and check under the fenders periodically.

▼ **Parking in cold weather**

WARNING

Snow can trap dangerous exhaust gases under your vehicle. Keep snow clear of the exhaust pipe and from around your vehicle if you park the vehicle in snow with the engine running.

CAUTION

- **Do not use the parking brake when parking for long periods in cold weather since it could freeze in that position.**
- **When the vehicle is parked in snow or when it snows, raise the wiper blades off the glass to prevent damage to them.**
- **Under either of the following conditions, ice may form on the brake system, which could cause poor braking action.**
  - **When the vehicle has been left parked after use on roads heavily covered with snow**
  - **When the vehicle has been left parked during a snowstorm**

  Check for snow or ice buildup on the suspension, disc brakes and brake hoses underneath the vehicle. If there is caked snow or ice, remove it, being careful not to damage the disc brakes and brake hoses and ABS harness.

When parking for long periods in cold weather, you should observe the following tips.

1. For MT models, place the shift lever in the “1” or “R” position. For CVT models, place the select lever in the “P” position.
2. Use tire stops under the tires to prevent the vehicle from moving.

▼ **Refueling in cold weather**

To help prevent moisture from forming in the fuel system and the risk of its freezing, use of an antifreeze additive in the fuel tank is recommended during cold weather.

Use only additives that are specifically designed for this purpose. When an antifreeze additive is used, its effect lasts longer if the tank is refilled whenever the fuel level reaches half empty.

If your SUBARU is not going to be used for an extended period, it is best to have the fuel tank filled to capacity.

■ Driving on snowy and icy roads

To prevent skidding and slipping, avoid sudden braking, abrupt acceleration, high-speed driving, and sharp turning when driving on snowy or icy roads.

Always maintain ample distance between your vehicle and the vehicle ahead of you to avoid the need for sudden braking.

To supplement the foot brake, use the engine brake effectively to control the vehicle speed. (Shift into a lower gear when necessary.)

Avoid shifting down abruptly. Such behavior can cause the wheels to lock, possibly leading to loss of vehicle control.

An anti-lock brake system (ABS) enhances your vehicle’s braking performance on snowy and icy roads. For information on braking on slippery surfaces, refer to “ABS (Anti-lock Brake System)” ☞7-32 and “Vehicle Dynamics Control system” ☞7-34.

– CONTINUED –

WARNING

Do not use the cruise control on slippery roads such as snowy or icy roads. This may cause loss of vehicle control.

CAUTION

Avoid prolonged continuous driving in snowstorms. Snow will enter the engine's intake system and may hinder the airflow, which could result in engine shutdown or even breakdown.

▼ Wiper operation when snowing

Before driving in cold weather, make sure the rubber wiper blades are not frozen to the windshield or rear window.

If the rubber wiper blades are frozen to the windshield or rear window, perform the following procedure.

- To thaw the windshield rubber wiper blades, use the defroster with the airflow selection in "" and the temperature set for maximum warmth until the rubber wiper blades are completely thawed. Refer to "Climate control" ☞4-1.
- If your vehicle is equipped with a wiper deicer, use it. It is helpful to thaw the windshield rubber wiper blades. Refer to "Defogger and deicer" ☞3-100.
- To thaw the rear rubber wiper blades, use the rear window defogger. Refer to "Defogger and deicer" ☞3-100.

When driving in snow, if frozen snow starts to stick on the surface of the windshield despite wiper operation, use the defroster with the airflow selection in "" and the temperature set for maximum warmth. After the windshield gets warmed enough to melt the frozen snow on it, wash it away using the windshield washer. Refer to "Windshield washer" ☞3-97.

Snow stuck on the wiper arm prevents the wiper from working effectively. If snow is stuck on the wiper arm, pull off the road to a safe place, then remove it. If you stop the vehicle at road side, use the hazard warning flasher to alert other drivers. Refer to "Hazard warning flasher" ☞3-8.

We recommend use of non-freezing type wiper blades (winter blades) during the seasons you could have snow and freezing temperatures. Blades of this type give superior wiping performance in snowy conditions. Be sure to use blades that are suitable for your vehicle.

CAUTION

During high-speed driving, non-freezing type wiper blades may not perform as well as standard wiper blades. If this happens, reduce the vehicle speed.

NOTE

When the season requiring non-freezing type wiper blades is over, replace them with standard wiper blades.

■ Corrosion protection

Refer to "Corrosion protection" ☞10-4.

■ Snow tires

WARNING

- **When replacing or installing winter tire(s), all four tires must be the same for following items.**
  (a) Size
  (b) Circumference
  (c) Speed symbol
  (d) Load index
  (e) Construction
  (f) Manufacturer

(g) Brand (tread pattern)

(h) Degrees of wear

For the items (a) to (d), you must obey the specification that is printed on the tire placard. The tire placard is located on the driver's door pillar.

If all of four winter tires are not the same for items (a) to (h), serious mechanical damage could occur to the drive train of your car, and affect the following.

— Ride

— Handling

— Braking

— Speedometer/Odometer calibration

— Clearance between the body and tires

It also may be dangerous and lead to loss of vehicle control, and it can lead to an accident.

- **Do not use a combination of radial, belted bias or bias tires since it may cause dangerous handling characteristics and lead to an accident.**

Your vehicle is equipped with "all season tires" as original equipment, which are designed to provide an adequate measure of traction, handling and braking performance in year-round driving. In winter, it may be possible to enhance performance through use of tires designed specifically for winter driving conditions.

When you choose to install winter tires on your vehicle, be sure to use the correct tire size and type. You must install four winter tires that are of the same size, construction, brand and load range and you should never mix radial, belted bias or bias tires since this may result in dangerous handling characteristics. When you choose a tire, make sure that there is enough clearance between the tire and vehicle body.

Remember to drive with care at all times regardless of the type of tires on your vehicle.

■ Tire chains

⚠ CAUTION

Tire chains cannot be used on your vehicle because of the lack of clearance between the tires and vehicle body.

NOTE

When tire chains cannot be used, use of another type of traction device (such as spring chains) may be acceptable if use on your vehicle is recommended by the device manufacturer, taking into account tire size and road conditions. Follow the device manufacturer's instructions, especially regarding maximum vehicle speed.

To help avoid damage to your vehicle, drive slowly, readjust or remove the device if it is contacting your vehicle, and do not spin your wheels. Damage caused to your vehicle by use of a traction device is not covered under warranty.

Make certain that any traction device you use is an SAE class S device, and use it on the front wheels only. Always use the utmost care when driving with a traction device. Overconfidence because you are using a traction device could easily lead to a serious accident.

■ Rocking the vehicle

If you must rock the vehicle to free it from snow, sand, or mud, depress the accelerator pedal slightly and move the shift lever/select lever back and forth between "1"/"D" and "R" repeatedly. Do not race the

– CONTINUED –

engine. For the best possible traction, avoid spinning the wheels when trying to free the vehicle.

When the road surface is extremely slippery, you can obtain better traction by starting the vehicle with the transmission in 2nd than 1st (both for MT and CVT models).

If your vehicle is a CVT model, for information about holding the transmission in the 2nd position, refer to “Selection of manual mode” ☞7-26.

Loading your vehicle

⚠ WARNING

- **Never allow passengers to ride on a folded rear seatback or in the cargo area. Doing so may result in serious injury.**
- **Never stack luggage or other cargo higher than the top of the seatback because it could tumble forward and injure passengers in the event of a sudden stop or accident. Keep luggage or cargo low, as close to the floor as possible.**

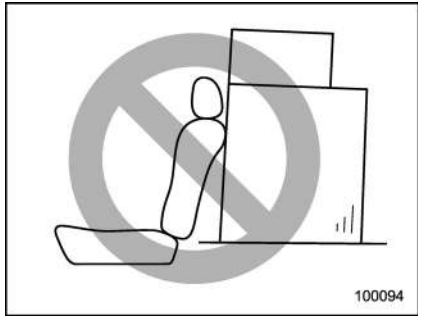

⚠ WARNING

- **When you carry something inside the vehicle, secure it whenever you can to prevent it from being thrown around inside the vehicle during sudden stops, sharp turns or in an accident.**
- **Do not pile heavy loads on the roof. These loads raise the vehicle’s center of gravity and make it more prone to tip over.**
- **Secure lengthy items properly to prevent them from shooting forward and causing serious injury during a sudden stop.**
- **Never exceed the maximum load limit. If you do, some parts on your vehicle can break, or it can change the way your vehicle handles. This could result in loss of control and cause personal injury. Also, overloading can shorten the life of your vehicle.**
- **Do not place anything on the extended cargo area cover. Such items could tumble forward in the event of a sudden stop or a collision. This could cause serious injury.**

⚠ CAUTION

Do not carry spray cans, containers with flammable or corrosive liquids or any other dangerous items inside the vehicle.

NOTE

For better fuel economy, do not carry unneeded cargo.

■ Vehicle capacity weight

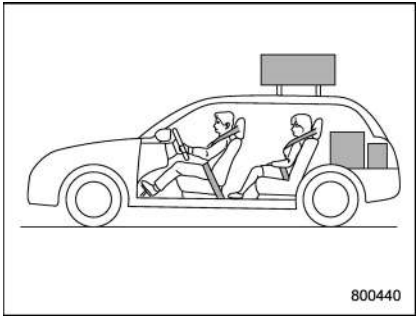

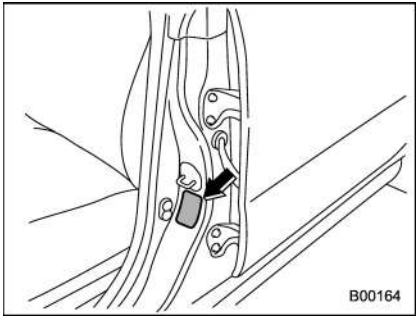

Vehicle placard

The load capacity of your vehicle is determined by weight, not by available cargo space. The maximum load you can carry in your vehicle is shown on the vehicle placard attached to the driver's side door pillar. It includes the total weight of the driver and all passengers and their belongings, any optional equipment such as a trailer hitch, roof rack or bike carrier, etc., and the tongue load of a trailer.

■ GVWR and GAWR (Gross Vehicle Weight Rating and Gross Axle Weight Rating)

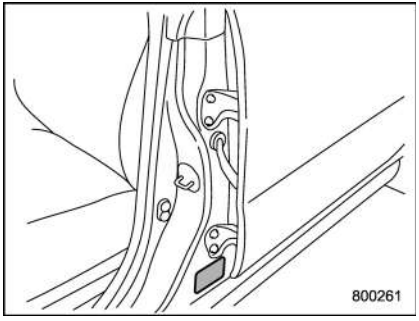

Certification label

The certification label attached to the bottom of driver's side door pillar shows GVWR (Gross Vehicle Weight Rating) and GAWR (Gross Axle Weight Rating).

The GVW (Gross Vehicle Weight) must never exceed the GVWR. GVW is the combined total of weight of the vehicle, fuel, driver, all passengers, luggage, any optional equipment and trailer tongue load. Therefore, the GVW changes depending on the situation. The GVWR equals Curb Weight (actual weight of your vehicle – including standard equipment, fluids, emergency tools and spare tire

– CONTINUED –

assembly) plus the vehicle capacity weight.

In addition, the total weight applied to each axle (GAW) must never exceed the GAWR. The front and rear GAWs can be adjusted by relocating luggage inside the vehicle.

Even if the total weight of your luggage is lower than the vehicle capacity weight, either front or rear GAW may exceed the GAWR, depending on the distribution of the luggage.

When possible, the load should be evenly distributed throughout the vehicle.

If you carry heavy loads in the vehicle, you should confirm that GVW and front and rear GAWs are within the GVWR and GAWR by putting your vehicle on a vehicle scale, found at a commercial weighing station.

Do not use replacement tires with a lower load range than the originals because they may lower the GVWR and GAWR limitations. Replacement tires with a higher load range than the originals do not increase the GVWR and GAWR limitations.

■ Roof rail

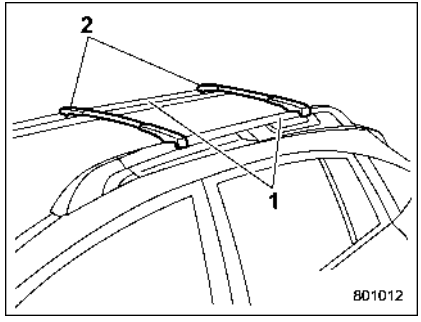

1) Roof rail
2) Crossbar

Cargo can be carried on the roof after securing the crossbars to the roof rails and installing an appropriate carrying attachment. When installing crossbars and a carrying attachment, follow the manufacturer's instructions. The roof rail system is designed to carry loads (cargo, crossbars and carrying attachment) of no more than **150 lbs (68 kg)**. Be sure not to exceed your vehicle's GVWR and GAWR.

⚠ CAUTION

- **When using a carrying attachment, make sure that the total carrying load of the cargo, crossbars and carrying attachment does not exceed 150 lbs (68 kg). Overloading may cause damage to the vehicle.**
- **For cargo carrying purposes, the roof rails must be used together with the crossbars and any appropriate carrying attachment that may be needed. The roof rails must never be used alone to carry cargo. Otherwise, damage to the roof or paint, or a dangerous road hazard due to loss of cargo could result.**

NOTE

Remember that the vehicle's center of gravity is altered with the weight of the load on the roof, thus affecting driving characteristics.

Drive carefully. Avoid rapid starts, hard cornering and abrupt stops. Crosswind effects will be increased.

Trailer hitch (dealer option)

⚠ WARNING

- **Never exceed the maximum weight specified for the trailer hitch. Exceeding the maximum weight could cause an accident resulting in serious personal injuries. Permissible trailer weight changes depending on the situation. For possible recommendations and limitations, refer to "Trailer towing" ☞8-17.**
- **Trailer brakes are required when the towing load exceeds 1,000 lbs (453 kg). Be sure your trailer has safety chains and that each chain will hold the trailer's maximum gross weight. Towing trailers without safety chains could create a traffic safety hazard if the trailer separates from the hitch due to coupling damage or hitch ball damage.**
- **Be sure to check the hitch pin and safety pin for positive locking placement before towing a trailer. If the ball mount comes off the hitch receiver, the trailer could get loose and create a traffic safety hazard.**
- **Although towing regulations for trailer or caravan vehicles vary by state/region, all regulations agree that specifications such as the maximum gross trailer weight must not exceed the lesser of the following:**
  - **Maximum gross trailer weight**
  - **Maximum gross tongue weight**
  - **GVWR**
  - **GAWR**
- **Failure to comply with the procedures set forth will not only compromise your safety, but will also negate your insurance coverage and/or may violate the state road and traffic acts and regulations.**
- **Use only the ball mount supplied with this hitch. Use the hitch only as a weight carrying hitch. Do not use with any type of weight distributing hitch.**
- **The standard bumper beam must be installed after you remove the trailer hitch. Consult a SUBARU dealer for purchase of a standard bumper beam if you do not have the original.**
- **Safety performance is decreased and there is increased risk of injury to passengers in the case of an accident if the trailer hitch or a standard bumper beam is not installed. One of them must always be installed on the vehicle.**
- **If a trailer hitch is installed, it is not possible to install the rear towing hook.**

The maximum gross trailer weight and maximum gross tongue weight are indicated in the following table.

	Maximum gross trailer weight	Maximum gross tongue weight
Crosstrek models	1,500 lbs (680 kg)	200 lbs (90 kg)

When towing a trailer, refer to "Trailer towing" ☞8-17.

– CONTINUED –

■ Connecting a trailer

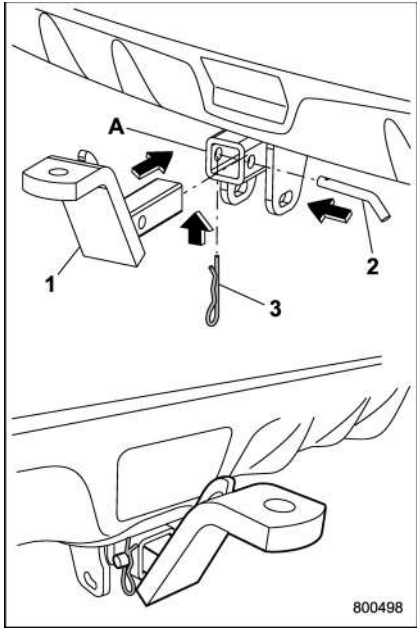

1) Ball mount
2) Hitch pin
3) Safety pin
A) Hitch receiver tube

1. Insert the ball mount into the hitch receiver tube.
2. Insert the hitch pin into the hole located on the hitch receiver tube so that the pin passes through the ball mount.
3. Insert the safety pin through the hole located on the hitch pin securely.
4. Check the ball mount assembly by pulling on it to make sure it does not come off the hitch receiver.

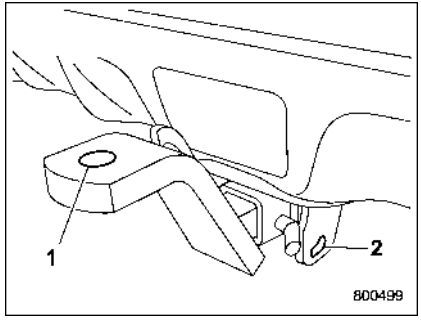

1) Hitch ball installation point
2) Hooks for safety chains

5. Attach a hitch ball. Use only a hitch ball that is appropriate for the ball mount and your trailer. The hitch ball must be securely installed on the ball mount.
6. Connect your trailer to the hitch ball.
7. Connect the trailer and the hitch with safety chains that will hold the trailer's maximum gross weight. The chains should cross under the trailer tongue to prevent the tongue from dropping onto the ground in case it should disconnect from the hitch ball. Allow sufficient slack in the chains taking tight turn situations into account; however, be careful not to let them drag on the ground.

⚠ WARNING

Do not connect safety chains to any part of the vehicle other than the safety chain hooks.

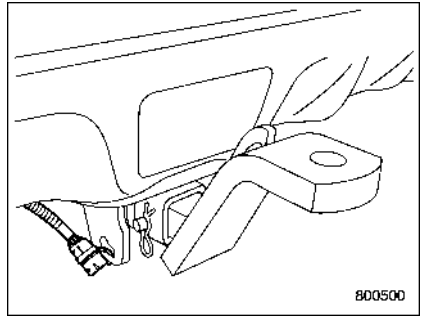

Hitch harness connector

8. Connect the hitch wire harness's black four-pin wire connector to the towing trailer's wire harness.

9. Confirm proper function of the hitch wire harness by individually activating the brake, stop and turn signal lights on the trailer.

NOTE

Always disconnect the trailer wire harness before launching or retrieving a watercraft.

■ If not towing a trailer

- Remove the ball mount from the hitch receiver tube and insert the receiver cover onto the hitch receiver tube.
- Place the dust cap over the four-pin connector of the hitch wire harness to protect against possible damage.
- Occasionally lubricate terminals of the four-pin connector using terminal grease.

Trailer towing

Your vehicle is designed and intended to be used primarily as a passenger-carrying vehicle. Towing a trailer puts additional loads on your vehicle's engine, drivetrain, brakes, tires and suspension and has an adverse effect on fuel economy.

If you do decide to tow a trailer, your safety and satisfaction depend upon proper use of correct equipment and cautious operation of your vehicle. Seek the advice of your SUBARU dealer to assist you in purchasing a hitch and other necessary towing equipment appropriate for your vehicle. Do not use towing equipment other than genuine SUBARU towing equipment. In addition, be sure to follow the instructions for proper installation and use provided by the trailer or caravan's manufacturer.

SUBARU assumes no responsibility for injuries or vehicle damage that result from trailer towing equipment, or from any errors or omissions in the instructions accompanying such equipment or for your failure to follow the proper instructions. Regularly check that the hitch mounting bolts and nuts are tightened securely.

■ Warranties and maintenance

SUBARU warranties do not apply to vehicle damage or malfunction caused by trailer towing. If you use your vehicle to tow a trailer, more frequent maintenance will be required due to the additional load. (Refer to "Maintenance schedule under severe driving conditions" in the "Warranty and Maintenance Booklet".)

Under no circumstances should a trailer be towed with a new vehicle or a vehicle with any new powertrain component (engine, transmission, differential, wheel bearings, etc.) for the first 1,000 miles (1,600 km) of driving.

– CONTINUED –

■ Maximum load limits

WARNING

Never exceed the maximum load limits explained in the following. Exceeding the maximum load limits could cause personal injury and/or vehicle damage.

CAUTION

- **Adequate size trailer brakes are required when the trailer and its cargo exceed 1,000 lbs (453 kg) total weight.**
- **Before towing a trailer, check the trailer total weight, GVW, GAWs and tongue load. Make sure the load and its distribution in your vehicle and trailer are acceptable.**

▼ Total trailer weight

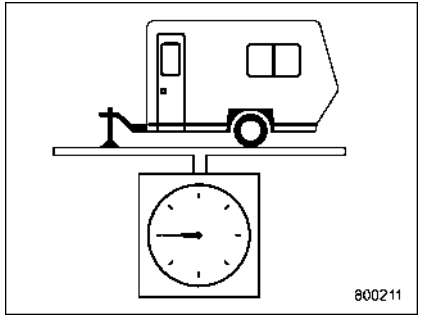

Total trailer weight

The total trailer weight (trailer weight plus its cargo load) must never exceed the maximum total trailer weight in the following table.

Conditions	Maximum total trailer weight
When towing a trailer without brakes.	1,000 lbs (453 kg)
When towing a trailer with brakes.	1,500 lbs (680 kg)
When towing a trailer on a long uphill grade continuously for over 5 miles (8 km) with an outside temperature of 104°F (40°C) or above.	750 lbs (340 kg)

▼ Gross Vehicle Weight (GVW) and Gross Vehicle Weight Rating (GVWR)

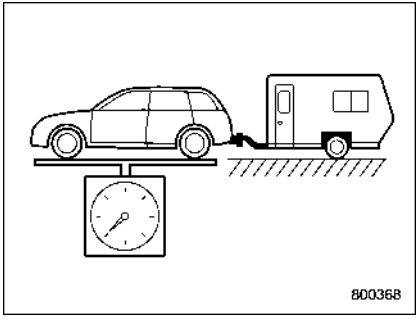

Gross Vehicle Weight

The Gross Vehicle Weight (GVW) must never exceed the Gross Vehicle Weight Rating (GVWR).

Gross Vehicle Weight (GVW) is the combined total of the weight of the vehicle, driver, passengers, luggage, trailer hitch, trailer tongue load and any other optional equipment installed on your vehicle. Therefore, the GVW changes depending on the situation. Determine the GVW each time before going on a trip by putting your vehicle and trailer on a vehicle scale.

– CONTINUED –

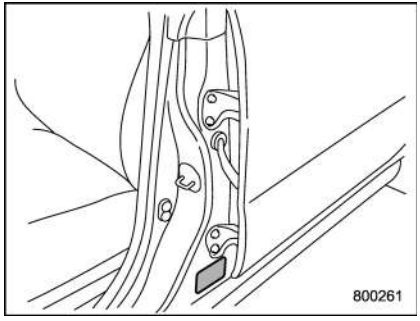

Certification label

GVWR of your vehicle that is given by SUBARU is shown on the certification label located at the bottom of driver's side door pillar of your vehicle.

▼ Gross Axle Weight (GAW) and Gross Axle Weight Rating (GAWR)

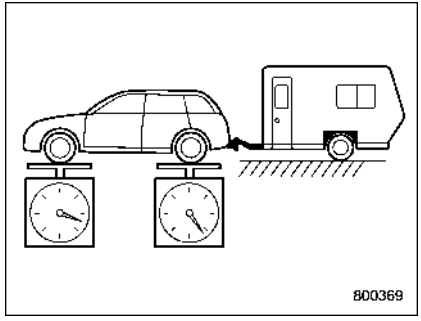

Gross Axle Weight

The total weight applied to each axle (GAW) must never exceed the Gross Axle Weight Rating (GAWR). The front and rear GAWs can be adjusted by relocating passengers and luggage inside the vehicle. The front and rear GAWR of your vehicle that is given by SUBARU are also shown on the certification label located at the bottom of driver's side door pillar.

To check both GVWR and GAWR and to confirm that the total weight and weight distribution are within safe driving limits, you should have your vehicle and trailer weighed at a commercial weighing station.

Be sure that all cargo is firmly secured to prevent a change in weight distribution while driving.

▼ Tongue load

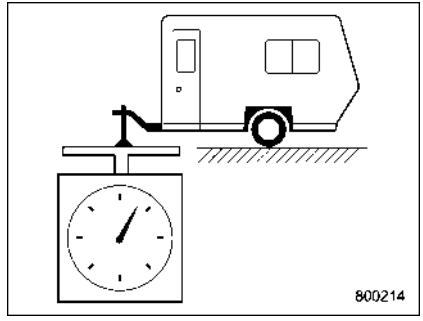

Tongue load

Ensure that the trailer tongue load is from 8 to 11 percent of the total trailer weight and does not exceed the maximum value of 200 lbs (90 kg).

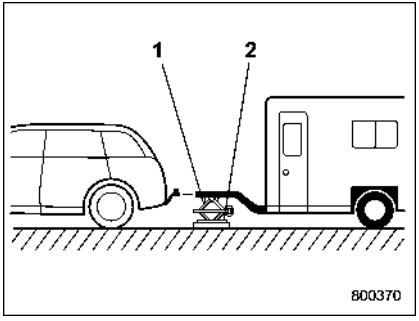

1) Jack
2) Bathroom scale

The tongue load can be weighed with a bathroom scale as shown in the illustration above. When weighing the tongue load, be sure to position the towing coupler at the height at which it would be during actual towing, using a jack as shown.

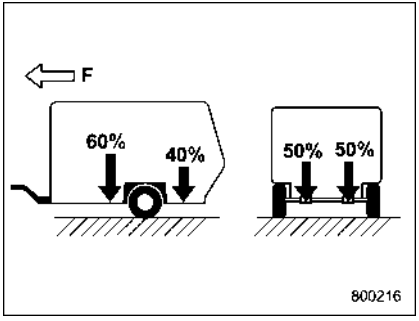

F: Front

The tongue load can be adjusted by proper distribution of the load in the trailer. Never load the trailer with more weight in the back than in the front; approximately 60 percent of the trailer load should be in the front and approximately 40 percent in the rear. Also, distribute the load as evenly as possible on both the left and right sides.

Be sure that all cargo is firmly secured to prevent a change in weight distribution while driving.

WARNING

If the trailer is loaded with more weight in the back of trailer's axle than in the front, the load is taken off the rear axle of the towing vehicle. This may cause the rear wheels to skid, especially during braking or when vehicle speed is reduced during cornering, resulting in oversteer, spin out and/or jackknifing.

Trailer Hitches

WARNING

Never drill the frame or under-body of your vehicle to install a commercial trailer hitch. If you do, dangerous exhaust gas, water or mud may enter the passenger compartment through the drilled hole. Exhaust gas contains carbon monoxide, a colorless and odorless gas which is dangerous, or even lethal, if inhaled. Also, drilling the frame or under-body of your vehicle could cause deterioration of strength of your vehicle and cause corrosion around the drilled hole.

CAUTION

- **Do not modify the vehicle exhaust system, brake system, or other systems when installing a**

– CONTINUED –

hitch or other trailer towing equipment.

- **Do not use axle-mounted hitches as they can cause damage to the axle housing, wheel bearings, wheels or tires.**

Do not use a trailer hitch other than genuine SUBARU trailer hitch. A genuine SUBARU hitch is available from your SUBARU dealer.

■ Connecting a trailer

▼ Trailer brakes

⚠ WARNING

- **Adequate size trailer brakes are required when the trailer and its cargo exceed 1,000 lbs (453 kg) total weight.**
- **Do not directly connect your trailer's hydraulic brake system to the hydraulic brake system in your vehicle. Direct connection would cause the vehicle's brake performance to deteriorate and could lead to an accident.**

If your trailer's total weight (trailer weight plus its cargo weight) exceeds 1,000 lbs (453 kg), the trailer is required to be equipped with its own brake system. Electric brakes or surge brakes are recommended, and must be installed properly. Check that your trailer's brakes conform with Federal, state/province and/or other applicable regulations. Your SUBARU's brake system is not designed to be tapped into the trailer's hydraulic brake system. Please ask your SUBARU dealer and professional trailer supplier for more information about the trailer's brake system.

▼ Trailer safety chains

⚠ WARNING

Always use safety chains between your vehicle and the trailer. Towing trailer without safety chains could create a traffic safety hazard if the trailer separates from the hitch due to coupling damage or hitch ball damage.

In case the trailer hitch connector or hitch ball should break or become disconnected, the trailer could get loose and create a traffic safety hazard.

For safety, always connect the towing vehicle and trailer with trailer safety chains. Two chains should be used in total, one to the right side and the other to the left side trailer tongue. Pass the chains crossing each other under the trailer tongue to prevent the trailer from dropping onto the ground in case the trailer tongue should disconnect from the hitch ball. Allow sufficient slack in the chains taking tight turn situations into account; however, be careful not to let them drag on the ground.

▼ Side mirrors

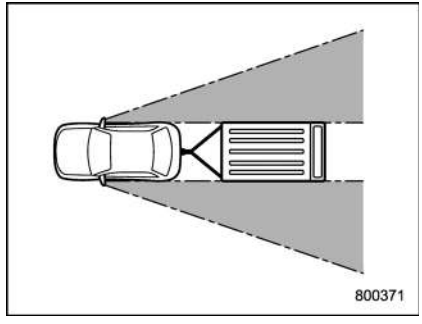

After hitching a trailer to your vehicle, check that the standard side mirrors provide a good rearward field of view without significant blind spots. If significant blind spots occur with the vehicle's standard side mirrors, use towing mirrors that conform with Federal, state/province and/or other applicable regulations.

▼ **Trailer lights**

CAUTION

Direct splicing or other improper connection of trailer lights may damage your vehicle's electrical system and cause a malfunction of your vehicle's lighting system.

Connection of trailer lights to your vehicle's electrical system requires modifications to the vehicle's lighting circuit to increase its capacity and accommodate wiring changes. To ensure the trailer lights are connected properly, please consult your SUBARU dealer. Check for proper operation of the turn signals and the brake lights each time you connect a trailer to your vehicle.

▼ **Tires**

WARNING

Never tow a trailer when the temporary spare tire is used. The temporary spare tire is not designed to sustain the towing load. Use of the temporary spare tire when towing can result in failure of the spare tire and/or less stability of the vehicle.

Make sure that all the tires on your vehicle are properly inflated. Refer to "Tires" ☞12-8.

Trailer tire condition, size, load rating and proper inflation pressure should be in accordance with the trailer manufacturer's specifications. Also check federal, state, province and/or other applicable regulations.

In the event your vehicle gets a flat tire when towing a trailer, ask a commercial road service representative or professional to repair the flat tire.

If you carry a regular size spare tire in your vehicle or trailer as a precaution against getting a flat tire, be sure that the spare tire is firmly secured.

■ Trailer towing tips

CAUTION

- **For models equipped with the BSD (Blind Spot Detection) and RCTA (Rear Cross Traffic Alert) driving support systems, when towing a trailer, press the BSD/RCTA OFF switch to deactivate the system. The system may not operate properly due to the blocked radar waves. For details about the BSD/RCTA OFF switch, refer to "BSD/RCTA OFF switch" ☞7-55.**
- **Never exceed 45 mph (72 km/h) when towing a trailer in hilly country on hot days.**
- **When towing a trailer, steering, stability, stopping distance and braking performance will be different when compared to normal operation. For safety's sake, you should employ extra caution when towing a trailer and you should never drive at excessive speeds. You should also keep the following tips in mind:**
- **When parking on a steep slope with a trailer attached to your vehicle, the braking power of the parking brake may not be sufficient since stronger braking power is needed.**

▼ **Before starting out on a trip**

- Check the towing regulations for trailer or caravan vehicles that vary by state/region. Failure to comply with the procedures set forth will not only compromise your safety, but will also negate your insurance coverage and/or may violate the state road and traffic acts and regulations.

– CONTINUED –

- Check that the vehicle and vehicle-to-hitch mounting are in good condition. If any problems are apparent, do not tow the trailer.
- Check that the vehicle rests horizontally with the trailer attached. If the vehicle is tipped sharply up at the front and down at the rear, check the total trailer weight, GVW, GAWs and tongue load again, then confirm that the load and its distribution are acceptable.
- Check that the tire rating and pressures are correct.
- Check that the vehicle and trailer are connected properly. Confirm that:
  – the trailer tongue is connected properly to the hitch ball.
  – the trailer lights connector is connected properly and trailer's brake lights illuminate when the vehicle's brake pedal is pressed, and that the trailer's turn signal lights flash when the vehicle's turn signal lever is operated.
  – the safety chains are connected properly.
  – all cargo in the trailer is secured safely in position.
  – the side mirrors provide a good rearward field of view without a significant blind spot.
- Sufficient time should be taken to learn the "feel" of the vehicle/trailer combination before starting out on a trip. In an area free of traffic, practice turning, stopping and backing up.

▼ Driving with a trailer

- You should allow for considerably more stopping distance when towing a trailer. Avoid sudden braking because it may result in skidding or jackknifing and loss of control.
- Avoid abrupt starts and sudden accelerations. If your vehicle has a manual transmission, always start out in first gear and release the clutch at moderate engine revolution.
- Avoid uneven steering, sharp turns and rapid lane changes.
- Slow down before turning. Make a longer than normal turning radius because the trailer wheels will be closer than the vehicle wheels to the inside of the turn. In a tight turn, the trailer could hit your vehicle.
- Crosswinds will adversely affect the handling of your vehicle and trailer, causing sway. Crosswinds can be due to weather conditions or the passing of large trucks or buses. If swaying occurs, firmly grip the steering wheel and promptly begin decelerating your vehicle at a gradual pace.
- When passing other vehicles, considerable distance is required because of the added weight and length caused by attaching the trailer to your vehicle.

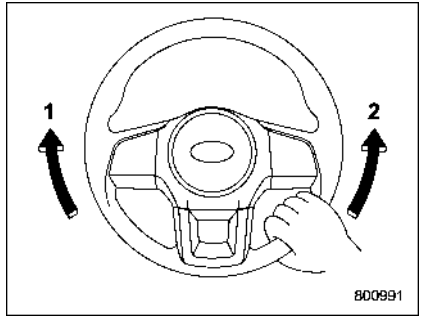

1) Left turn
2) Right turn

- Backing up with a trailer is difficult and takes practice. When backing up with a trailer, never accelerate or steer rapidly. When turning back, grip the bottom of the steering wheel with one hand and turn it to the left for a left turn, and turn it to the right for a right turn.
- If the ABS warning light illuminates while the vehicle is in motion, stop towing the trailer and have repairs performed immediately by your nearest SUBARU dealer.

▼ Driving on grades

- Before going down a steep hill, slow down and shift into lower gear (if necessary, use 1st gear) in order to utilize the engine braking effect and prevent overheating of your vehicle's brakes. Do not make sudden downshifts.
- When driving uphill in hot weather, the air conditioner may turn off automatically to protect the engine from overheating.
- When driving uphill in hot weather, pay attention to the following indicators because the engine and transmission are relatively prone to overheating.

: Coolant temperature high warning light

AT OIL TEMP: AT OIL TEMP warning light (CVT models)

If the coolant temperature high warning light and/or the AT OIL TEMP warning light illuminates, immediately turn off the air conditioner and stop the vehicle in the nearest safe location. For further instructions and additional information, refer to the following sections.

– "If you park your vehicle in case of an emergency" ☞9-2
– "Engine overheating" ☞9-12
– "Coolant temperature low indicator light/Coolant temperature high warning light" ☞3-17
– "AT OIL TEMP warning light (CVT models)" ☞3-19

- For CVT models, avoid using the accelerator pedal to stay stationary on an uphill slope instead of using the parking brake or foot brake. That may cause the transmission fluid to overheat.

▼ Parking on a grade

Always block the wheels under both vehicle and trailer when parking. Apply the parking brake firmly. You should not park on a hill or slope. If parking on a hill or slope cannot be avoided, you should take the following steps:

1. Apply the brakes and hold the pedal down.
2. Have someone place wheel blocks under both the vehicle and trailer wheels.
3. When the wheel blocks are in place, release the regular brakes slowly until the blocks absorb the load.
4. Apply the regular brakes and then apply the parking brake; slowly release the regular brakes.
5. Shift into 1st or reverse gear (MT models) or "P" position (CVT models) and shut off the engine.

If you park your vehicle in case of an emergency 9-2
Temporary spare tire 9-2
Maintenance tools 9-3
Tool locations 9-4
Using the jack 9-4
Flat tires 9-5
Changing a flat tire 9-5
Tire pressure monitoring system (TPMS) (U.S.-spec. models) 9-8
Jump starting 9-10
How to jump start 9-10
Engine overheating 9-12
If steam is coming from the engine compartment 9-12
If no steam is coming from the engine compartment 9-12
Towing 9-13
Towing hooks and tie-down hooks/holes 9-13
Using a flat-bed truck 9-15
Towing with all wheels on the ground 9-16
Access key – if access key does not operate properly 9-17
Locking and unlocking 9-17
Switching power status 9-17
Starting engine 9-18
Rear gate – if the rear gate cannot be opened 9-18
If your vehicle is involved in an accident 9-19

If you park your vehicle in case of an emergency

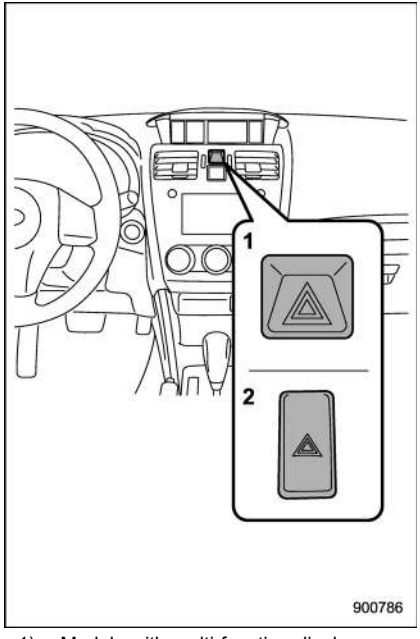

1) Models with multi function display
2) Models without multi function display

The hazard warning flasher should be used in day or night to warn other drivers when you have to park your vehicle under emergency conditions.

Avoid stopping on the road. It is best to safely pull off the road if a problem occurs.

The hazard warning flasher can be activated regardless of the ignition switch position.

Turn on the hazard warning by pushing the hazard warning flasher switch. Turn it off by pushing the switch again.

NOTE

When the hazard warning flasher is on, the turn signals do not work.

Temporary spare tire

WARNING

- **Never tow a trailer when the temporary spare tire is used. The temporary spare tire is not designed to sustain the towing load. Use of the temporary spare tire when towing can result in failure of the spare tire and/or less stability of the vehicle and may lead to an accident.**
- **When a spare tire is mounted or a wheel rim is replaced without the original pressure sensor/transmitter being transferred, the low tire pressure warning light will illuminate steadily after blinking for approximately one minute. This indicates the tire pressure monitoring system (TPMS) is unable to monitor all four road wheels. Contact your SUBARU dealer as soon as possible for tire and sensor replacement and/or system resetting.**

⚠ CAUTION

Never use any temporary spare tire other than the original. Using other sizes may result in severe mechanical damage to the drive train of your vehicle.

The temporary spare tire is smaller and lighter than a conventional tire and is designed for emergency use only. Remove the temporary spare tire and reinstall the conventional tire as soon as possible because the spare tire is designed only for temporary use.

Check the inflation pressure of the temporary spare tire periodically to keep the tire ready for use. The correct pressure is **60 psi (420 kPa, 4.2 kg/cm^2)**.

When using the temporary spare tire, note the following.

- Do not exceed 50 mph (80 km/h).
- Do not put a tire chain on the temporary spare tire. Because of the smaller tire size, a tire chain will not fit properly.
- Do not use two or more temporary spare tires at the same time.
- Do not drive over obstacles. This tire has a smaller diameter, so road clearance is reduced.

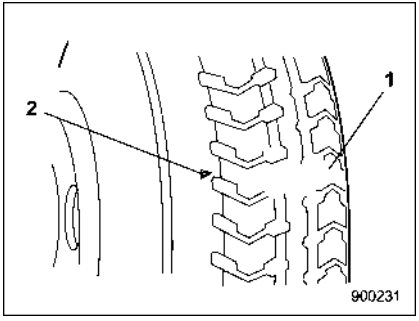

1) Tread wear indicator bar
2) Indicator location mark

- When the wear indicator appears on the tread, replace the tire.
- The temporary spare tire must be used only on a rear wheel. If a front wheel tire gets punctured, replace the wheel with a rear wheel and install the temporary spare tire in place of the removed rear wheel.

Maintenance tools

Your vehicle is equipped with the following maintenance tools.

- Jack
- Jack handle
- Screwdriver
- Towing hook (eye bolt)
- Wheel nut wrench

– CONTINUED –

■ Tool locations

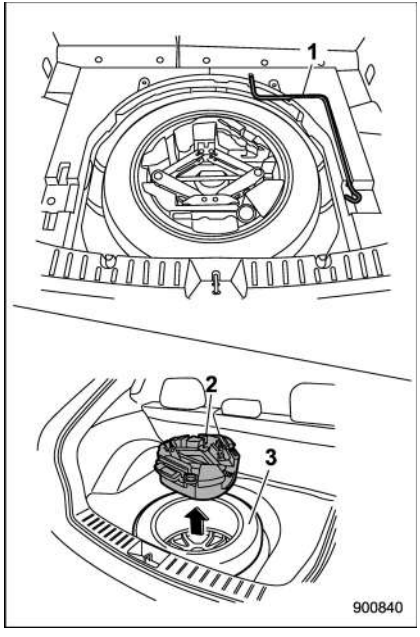

1) Jack handle
2) Tool bucket
3) Spare tire

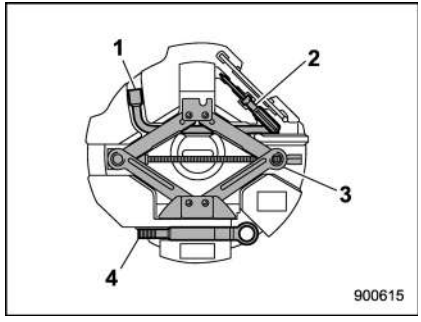

1) Wheel nut wrench
2) Screwdriver
3) Jack
4) Towing hook (eye bolt)

A jack handle is stored under the floor of the cargo area. A jack and a towing hook are stored in the tool bucket that is located in the recess of the spare tire wheel.

Also, a tool bag that contains a wheel nut wrench and a screwdriver is equipped with the vehicle. Open the tool bag and store the tools in the tool bucket as illustrated in order that all tools are ready for use at any time.

■ Using the jack

1. Park on a hard, level surface, whenever possible, then stop the engine.
2. Apply the parking brake securely and shift the shift lever in reverse (MT models) or the select lever to the “P” (Park) position (CVT models).
3. Turn on the hazard warning flasher and unload all occupants and luggage from the vehicle.

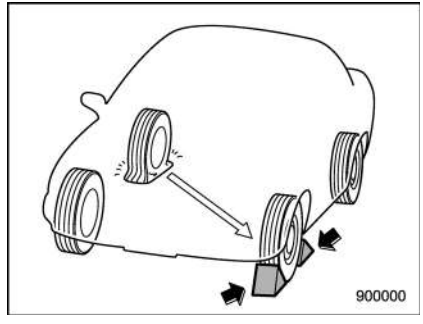

4. Put wheel blocks at the front and rear of the tire diagonally opposite the tire that you are going to replace.
5. Take out the jack and jack handle.

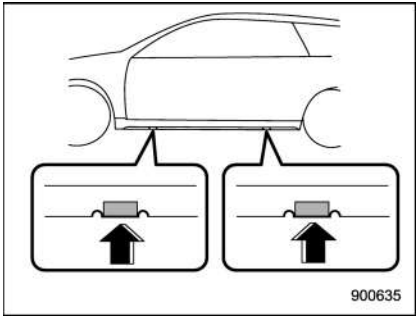

Jack-up points

6. Place the jack under the side sill at the front or rear jack-up point closest to the tire that you are going to replace.

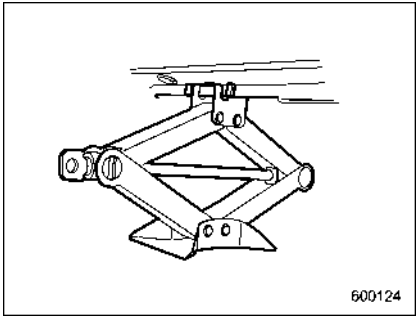

Turn the jackscrew by hand until the jack head engages firmly into the jack-up point.

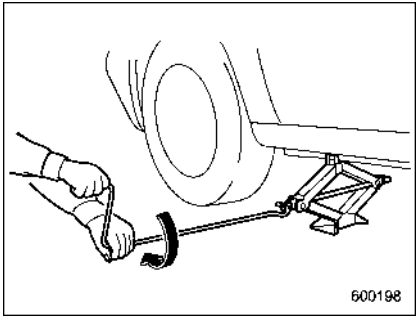

7. Insert the jack handle into the jack-screw, and turn the handle until the tire clears the ground. Do not raise the vehicle higher than necessary.

Flat tires

If you have a flat tire while driving, never brake suddenly; keep driving straight ahead while gradually reducing speed. Then slowly pull off the road to a safe place.

■ Changing a flat tire

⚠ WARNING

- **Do not jack up the vehicle on an incline or a loose road surface. The jack can come out of the jacking point or sink into the ground and this can result in a severe accident.**
- **Use only the jack provided with your vehicle. The jack supplied with the vehicle is designed only for changing a tire. Never get under the vehicle while support-ing the vehicle with this jack.**
- **Always turn off the engine before raising the flat tire off the ground using the jack. Never swing or push the vehicle supported with the jack. The jack can come out of the jacking point due to a jolt and this can result in a severe**

– CONTINUED –

accident.

1. Park on a hard, level surface, whenever possible, then stop the engine.
2. Apply the parking brake securely and shift the shift lever in reverse (MT models) or the select lever to the “P” (Park) position (CVT models).
3. Turn on the hazard warning flasher and unload all occupants and luggage from the vehicle.

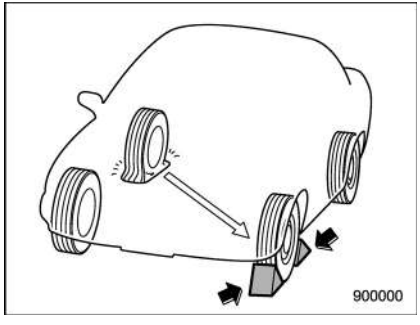

4. Put wheel blocks at the front and rear of the tire diagonally opposite the flat tire.
5. Take out the jack, jack handle and wheel nut wrench.

The tools and the spare tire are stored under the floor of the cargo area. Refer to “Maintenance tools” ☞9-3.

NOTE

Make sure that the jack is well lubricated before using it.

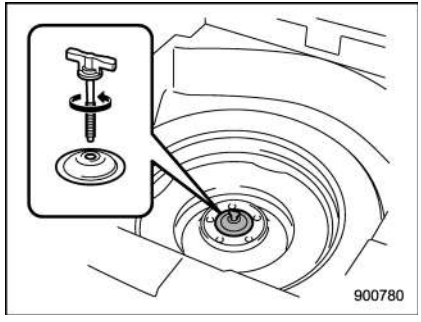

6. Take out the tool bucket and turn the attaching bolt counterclockwise, then take the spare tire out.

NOTE

If the spare tire provided in your vehicle is a temporary spare tire, carefully read “Temporary spare tire” ☞9-2 and strictly follow the instructions.

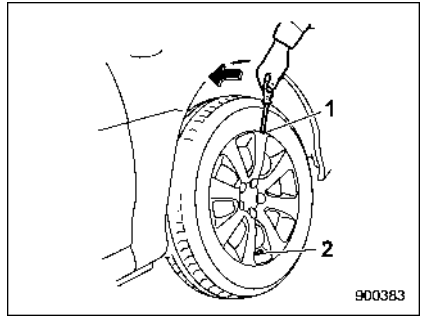

1) Notch
2) Valve hole

7. If your vehicle has wheel covers, insert a flat-head screwdriver into the notch on the opposite side of the valve hole and pry the wheel cover to remove it.

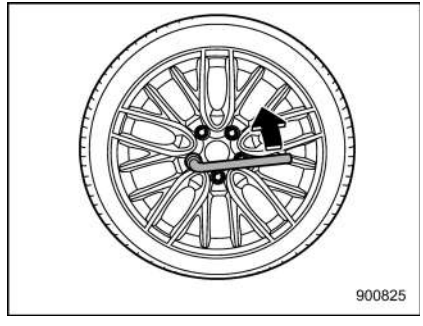

8. Loosen the wheel nuts using the wheel nut wrench but do not remove the nuts.

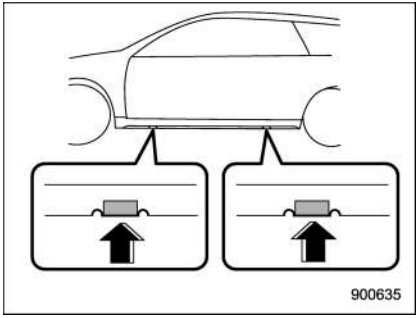

Jack-up points

9. Place the jack under the side sill at the front or rear jack-up point closest to the flat tire.

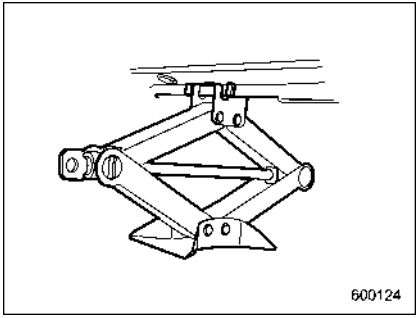

Turn the jackscrew by hand until the jack head engages firmly into the jack-up point.

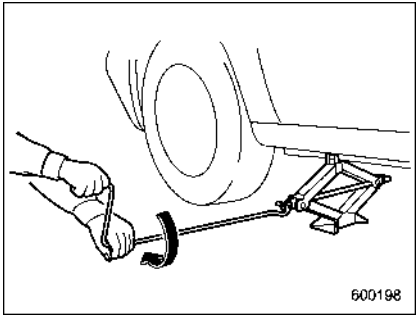

10. Insert the jack handle into the jack-screw, and turn the handle until the tire clears the ground. Do not raise the vehicle higher than necessary.

11. Remove the wheel nuts and the flat tire.

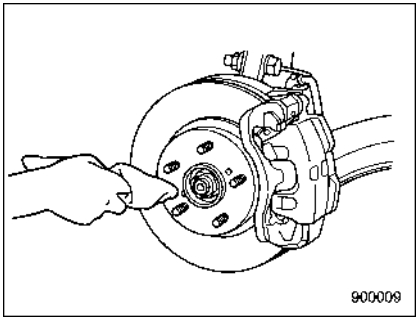

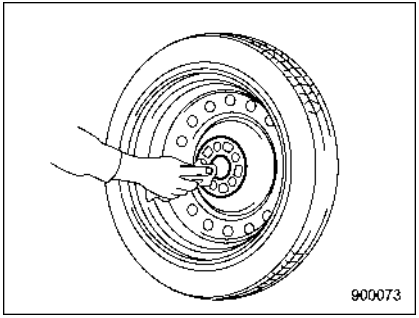

12. Before putting the spare tire on, clean the mounting surface of the wheel and hub with a cloth.

13. Put on the spare tire. Replace the wheel nuts. Tighten them by hand.

– CONTINUED –

WARNING

Do not use oil or grease on the wheel studs or nuts when the spare tire is installed. This could cause the nuts to become loose and lead to an accident.

14. Turn the jack handle counterclockwise to lower the vehicle.

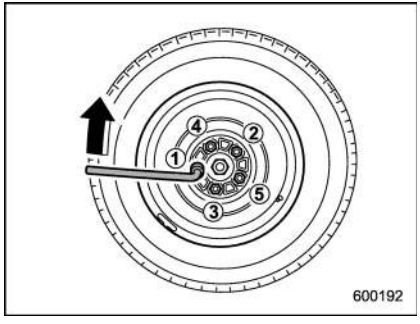

15. Use the wheel nut wrench to securely tighten the wheel nuts to the specified torque, following the tightening order in the illustration.

For the wheel nut tightening torque, refer to “Tires” ☞12-8. Never use your foot on the wheel nut wrench or a pipe extension on the wrench because you may exceed the specified torque. Have the wheel nut torque checked at the nearest automotive service facility.

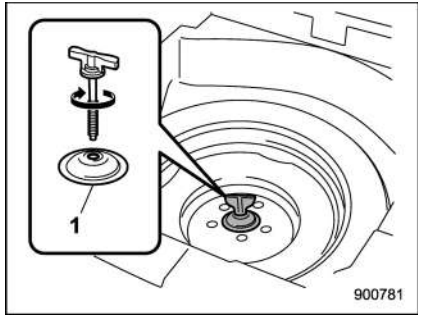

1) Support holder

16. Store the flat tire in the spare tire compartment. Install with the support holder facing upward and secure the flat tire by firmly tightening the attaching bolt.

NOTE

If you cannot fix the flat tire firmly, try turning the support holder upside down.

17. Store the jack, jack handle and wheel nut wrench in their storage locations.

WARNING

Never place a tire or tire changing tools in the passenger compartment after changing wheels. In a sudden stop or collision, loose equipment could strike occupants and cause injury. Store the tire and all tools in the proper place.

■ Tire pressure monitoring system (TPMS) (U.S.-spec. models)

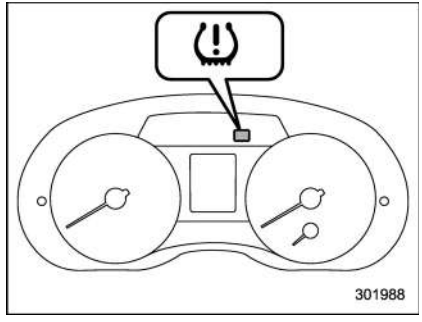

Low tire pressure warning light (type A)

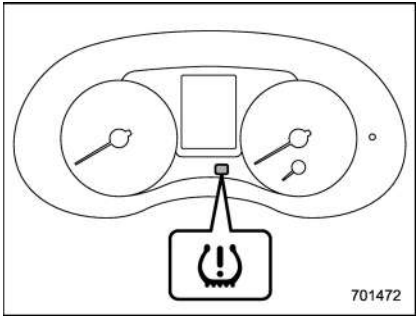

Low tire pressure warning light (type B)

The tire pressure monitoring system provides the driver with the warning message indicated by sending a signal from a sensor that is installed in each wheel when tire pressure is severely low.

The tire pressure monitoring system will activate only when the vehicle is driven. Also, this system may not react immediately to a sudden drop in tire pressure (for example, a blow-out caused running over a sharp object).

WARNING

- **If the low tire pressure warning light illuminates while driving, never brake suddenly. Instead, perform the following procedure. Otherwise an accident involving serious vehicle damage and serious personal injury could occur.**
  (1) Keep driving straight ahead while gradually reducing speed.
  (2) Slowly pull off the road to a safe place.
  (3) Check the pressure for all four tires and adjust the pressure to the COLD tire pressure shown on the vehicle placard on the door pillar on the driver's side.

  If this light still illuminates while driving after adjusting the tire pressure, a tire may have significant damage and a fast leak that causes the tire to lose air rapidly. If you have a flat tire, replace it with a spare tire as soon as possible.
- **When a spare tire is mounted or a wheel rim is replaced without the original pressure sensor/transmitter being transferred, the low tire pressure warning light will illuminate steadily after blinking for approximately one minute. This indicates the TPMS is unable to monitor all four road wheels. Contact your SUBARU dealer as soon as possible for tire and sensor replacement and/or system resetting.**
- **When a tire is repaired with liquid sealant, the tire pressure warning valve and transmitter may not operate properly. If a liquid sealant is used, contact your nearest SUBARU dealer or other qualified service shop as soon as possible. Make sure to replace the tire pressure warning valve and transmitter when replacing the tire. You may reuse the wheel if there is no damage to it and if the sealant residue is properly cleaned off.**

  If the light illuminates steadily after blinking for approximately one minute, promptly contact a SUBARU dealer to have the system inspected.

Jump starting

⚠ WARNING

- **Battery fluid is SULFURIC ACID. Do not let it come in contact with the eyes, skin, clothing or the vehicle.**

  If battery fluid gets on you, thoroughly flush the exposed area with water immediately. Get medical help if the fluid has entered your eyes.

  If battery fluid is accidentally swallowed, immediately drink a large amount of milk or water, and obtain immediate medical help.

  Keep everyone including children away from the battery.
- **The gas generated by a battery explodes if a flame or spark is brought near it. Do not smoke or light a match while jump starting.**
- **Never attempt jump starting if the discharged battery is frozen. It could cause the battery to burst or explode.**
- **Whenever working on or around a battery, always wear suitable eye protectors, and remove metal objects such as rings, bands or other metal jewelry.**
- **Be sure the jumper cables and clamps on them do not have loose or missing insulation.**

  Do not jump start unless cables in suitable condition are available.
- **A running engine can be dangerous. Keep your fingers, hands, clothing, hair and tools away from the cooling fan, belts and any other moving engine parts. Removing rings, watches and ties is advisable.**
- **Jump starting is dangerous if it done incorrectly. If you are unsure about the proper procedure for jump starting, consult a competent mechanic.**

When your vehicle does not start due to a run down (discharged) battery, the vehicle may be jump started by connecting your battery to another battery (called the booster battery) with jumper cables.

■ How to jump start

1. Make sure the booster battery is 12 volts and the negative terminal is grounded.
2. If the booster battery is in another vehicle, do not let the two vehicles touch.
3. Turn off all unnecessary lights and accessories.
4. Connect the jumper cables exactly in the sequence illustrated.

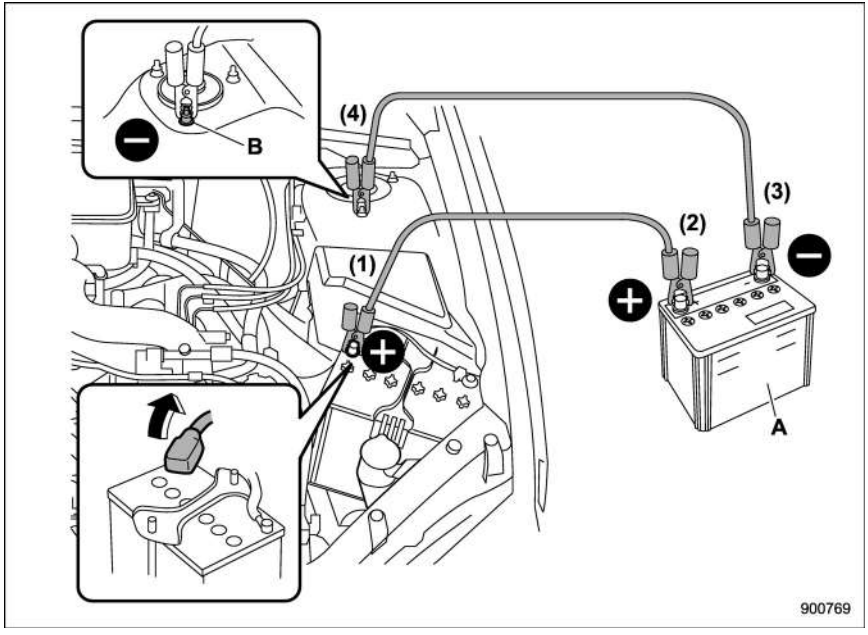

A) Booster battery
B) Strut mounting nut

(1) Connect one jumper cable to the positive (+) terminal on the discharged battery.
(2) Connect the other end of the jumper cable to the positive (+) terminal of the booster battery.
(3) Connect one end of the other cable to the negative (−) terminal of the booster battery.
(4) Connect the other end of the cable to the strut mounting nut of the vehicle with the discharged battery.

Make sure that the cables are not near any moving parts and that the cable clamps are not in contact with any other metal.

5. Start the engine of the vehicle with the booster battery and run it at moderate speed. Then start the engine of the vehicle that has the discharged battery.

6. When finished, carefully disconnect the cables in exactly the reverse order.

Engine overheating

⚠ WARNING

Never attempt to remove the radiator cap until the engine has been shut off and has fully cooled down. When the engine is hot, the coolant is under pressure. Removing the cap while the engine is still hot could release a spray of boiling hot coolant, which could burn you very seriously.

If the engine overheats, safely pull off the road and stop the vehicle in a safe location.

■ If steam is coming from the engine compartment

- Turn the ignition switch to the “LOCK”/“OFF” position and get everyone away from the vehicle until it cools down.
- Contact an authorized SUBARU dealer.

■ If no steam is coming from the engine compartment

1. Keep the engine running at idling speed.
2. Open the engine hood to ventilate the engine compartment. Refer to “Engine hood” ☞11-5.

Confirm that the cooling fan is turning. If the fan is not turning, immediately turn off the engine and contact an authorized SUBARU dealer for repair.

3. After the coolant temperature high warning light that has blinked or illuminated in **RED** turns off, turn off the engine. For details about the warning light, refer to “Coolant temperature low indicator light/Coolant temperature high warning light” ☞3-17.
4. After the engine has fully cooled down, check the coolant level in the reserve tank. If the coolant level is below the “LOW” mark, add coolant up to the “FULL” mark.

NOTE

For details about how to check the coolant level or how to add coolant, refer to “Engine coolant” ☞11-11.

5. If there is no coolant in the reserve tank, add coolant to the reserve tank. Then remove the radiator cap and fill the radiator with coolant.

If you remove the radiator cap from a hot radiator, first wrap a thick cloth around the radiator cap, then turn the cap counter-clockwise slowly without pressing down until it stops. Release the pressure from the radiator. After the pressure has been fully released, remove the cap by pressing down and turning it.

Towing

If towing is necessary, it is best done by your SUBARU dealer or a commercial towing service. Observe the following procedures for safety.

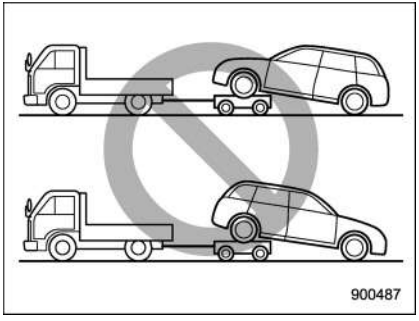

WARNING

Never tow AWD models with the front wheels raised off the ground while the rear wheels are on the ground, or with the rear wheels raised off the ground while the front wheels are on the ground. This will cause the vehicle to spin away due to the operation or deterioration of the center differential.

■ Towing hooks and tie-down hooks/holes

The towing hooks should be used only in an emergency (e.g., to free a stuck vehicle from mud, sand or snow).

CAUTION

- **Use only the specified towing hooks and tie-down hooks/holes. Never use suspension parts or other parts of the body for towing or tie-down purposes.**
- **To prevent deformation to the front bumper and the towing hook, do not apply excessive lateral load to the towing hooks.**

▼ Front towing hook

1. Take the towing hook and screwdriver out of the tool bucket. Take the jack handle out of the cargo area.

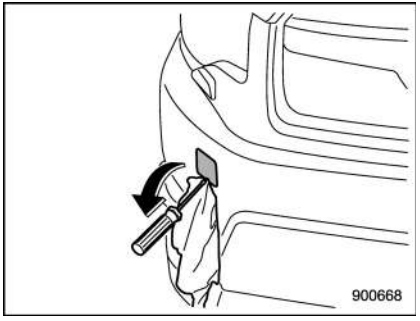

2. Cover the tip of a flat-head screwdriver with vinyl tape or cloth so that it will not scratch the bumper. Insert the flat-head screwdriver into the cutout of the cover and pry open the cover.

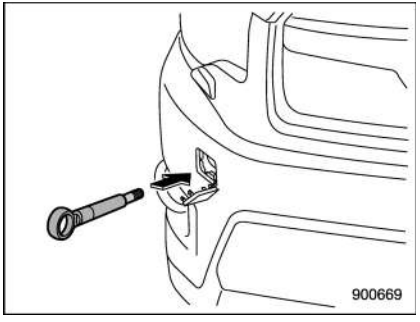

3. Screw the towing hook into the thread

– CONTINUED –

hole until its thread can no longer be seen.

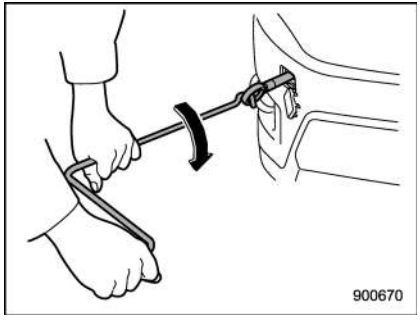

4. Tighten the towing hook securely using the jack handle.

After towing, remove the towing hook from the vehicle and stow it in the tool bucket. Fit the towing hook cover on the bumper.

⚠ WARNING

- **Do not use the towing hook for purposes other than towing your vehicle.**

- **Be sure to remove the towing hook after towing. Leaving the towing hook mounted on the vehicle could interfere with proper operation of the SRS airbag system in a frontal collision.**

▼ Rear towing hook

1. Take the towing hook and screwdriver out of the tool bucket. Take the jack handle out of the cargo area.

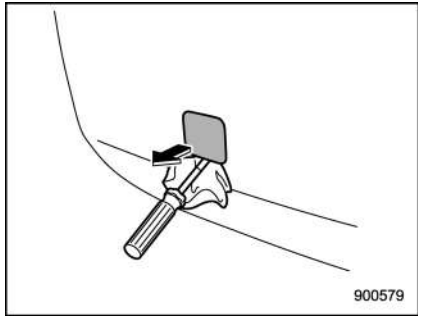

2. Pry off the cover on the rear bumper using a screwdriver, and you will find a threaded hole for attaching the towing hook.

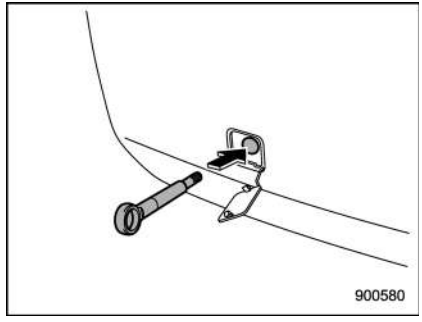

3. Screw the towing hook into the thread hole until its thread can no longer be seen.

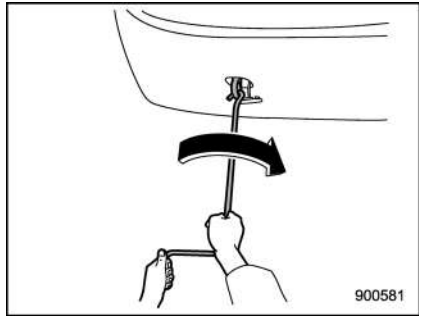

4. Tighten the towing hook securely using the jack handle.

After towing, remove the towing hook from

the vehicle and stow it in the tool bucket. Fit the towing hook cover on the bumper.

WARNING

- **Do not use the towing hook for purposes other than towing your vehicle.**
- **Be sure to remove the towing hook after towing. Leaving the towing hook mounted on the vehicle could interfere with proper operation of the fuel pump shut off function when the vehicle is struck from behind.**

▼ **Front tie-down hooks**

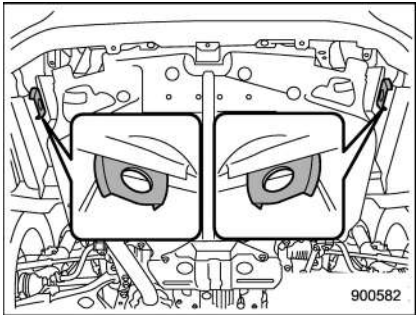

The front tie-down hooks are located between each of the front tires and the front bumper.

▼ **Rear tie-down holes**

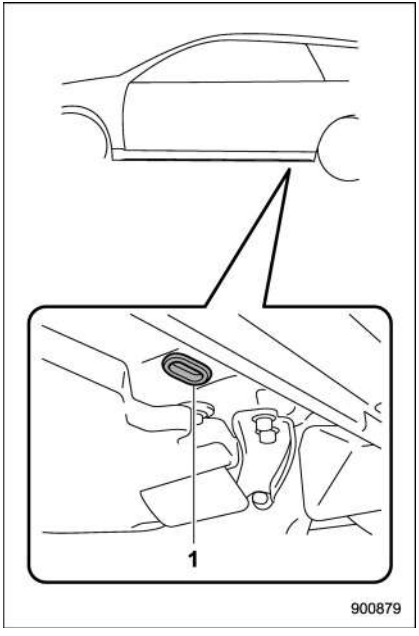

1) Rear tie-down hole

The rear tie-down holes are located near each of the jack-up reinforcements.

There is a plug in each rear tie-down hole.

To use the rear tie-down holes, remove the plugs. After using the rear tie-down holes, return the plugs to their original places.

WARNING

Use the rear tie-down holes only for downward anchoring. If they are used to anchor the vehicle in any other direction, cables may slip out of the holes, possibly causing a dangerous situation.

■ Using a flat-bed truck

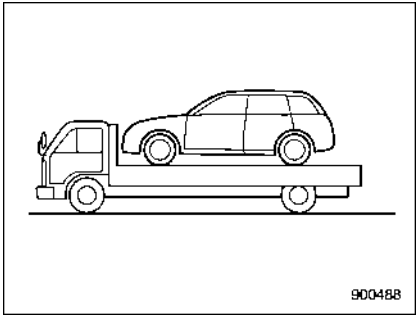

This is the best way to transport your vehicle. Use the following procedures to ensure safe transportation.

1. Shift the select lever into the “P”

– CONTINUED –

position for CVT models. Shift the shift lever into the “1st” position for MT models.

2. Pull up the parking brake lever firmly.

3. Secure the vehicle onto the carrier properly with safety chains. Each safety chain should be equally tightened and care must be taken not to pull the chains so tightly that the suspension bottoms out.

CAUTION

If your vehicle has a front underspoiler and rear underspoiler (both optional), be careful not to scrape them when placing the vehicle on the carrier and when removing the vehicle from the carrier.

Towing with all wheels on the ground

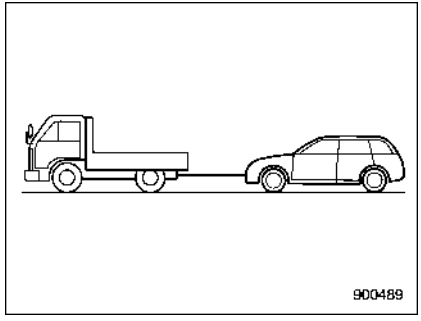

1. Release the parking brake and put the transmission in the “N” position.

2. The ignition switch should be in the “ON” position while the vehicle is being towed.

3. Take up slack in the towline slowly to prevent damage to the vehicle.

WARNING

- **Never turn the ignition switch to the “LOCK”/“OFF” position while the vehicle is being towed because the steering wheel and the direction of the wheels will be locked.**
- **Remember that the brake booster and power steering do not function when the engine is not running. Because the engine is turned off, it will take greater effort to operate the brake pedal and steering wheel.**

CAUTION

- **If transmission failure occurs, transport your vehicle on a flat-bed truck.**
- **For CVT models, the traveling speed must be limited to less than 20 mph (30 km/h) and the traveling distance to less than 31 miles (50 km). For greater speeds and distances, transport your vehicle on a flat-bed truck.**

Access key – if access key does not operate properly

CAUTION

Keep metallic objects, magnetic sources and signal transmitters away from the area between the access key and the push-button ignition switch. They may interfere with the communication between the access key and the push-button ignition switch.

The following functions may be inoperable because of strong radio signals in the surrounding area or the access key battery being low.

- Locking/unlocking doors (including the rear gate)
- Switching power status
- Starting engine

In such cases, perform the following procedure. When the battery of the access key is discharged, replace it with a new one. Refer to "Replacing battery of access key" ☞11-42.

■ Locking and unlocking

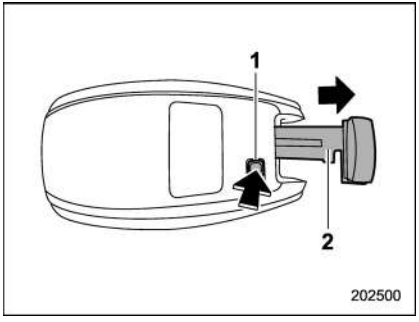

1) Release button
2) Mechanical key

While pressing the release button of the access key, take out the mechanical key.

Lock or unlock the driver's door with the mechanical key in the procedure described in "Locking and unlocking from the outside" ☞2-5.

NOTE

After locking or unlocking, be sure to attach the mechanical key back to the access key.

■ Switching power status

1. Apply the parking brake.
2. Shift the select lever into the "P" position.
3. Depress the brake pedal.

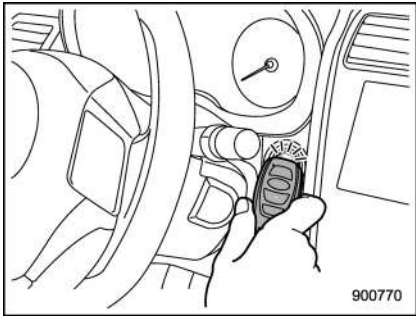

4. Hold the access key with the buttons facing you, and touch the push-button ignition switch with it.

When the communication between the access key and the vehicle is completed, a chime (ding) will sound. At the same time, the status of the push-button ignition switch changes to either of the following.

- When the keyless access with push-button start system is deactivated: "ACC"
- Under other conditions: "ON"

5. When the keyless access with push-

– CONTINUED –

button start system is deactivated, press the push-button ignition switch with the brake pedal released. The status of the push-button ignition switch then changes to “ON”.

NOTE

If the power status does not switch even though the above procedure was followed precisely, contact your SUBARU dealer.

■ Starting engine

1. Apply the parking brake.
2. Shift the select lever into the “P” position.
3. Depress the brake pedal.

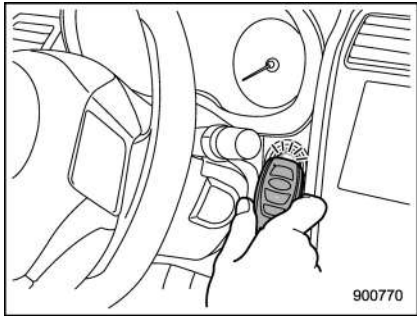

4. Hold the access key with the buttons facing you, and touch the push-button ignition switch with it.

When the communication between the access key and the vehicle is completed, a chime (ding) will sound. At the same time, the push-button ignition switch turns to the “ACC” or “ON” position.

5. After the push-button ignition switch turns to the “ACC” or “ON” position, while depressing the brake pedal, press the push-button ignition switch.

NOTE

If the engine does not start even though the above procedure was followed precisely, contact your SUBARU dealer.

Rear gate – if the rear gate cannot be opened

In the event that you cannot open the rear gate by operating the rear gate opener button, you can open it from inside the cargo area.

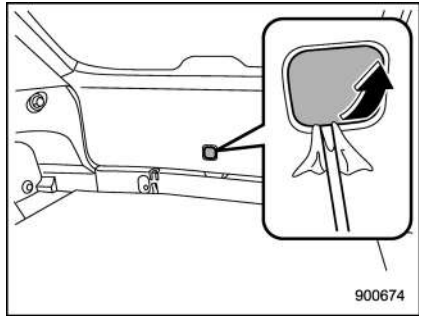

1. Remove the access cover at the bottom-center of the rear gate trim using a flat-head screwdriver wrapped with vinyl tape or a cloth.
2. Locate the rear gate open lever behind the rear gate trim panel.

CAUTION

Never operate the rear gate open lever with fingers because doing so may cause an injury. Always use a flat-head screwdriver or a similar tool.

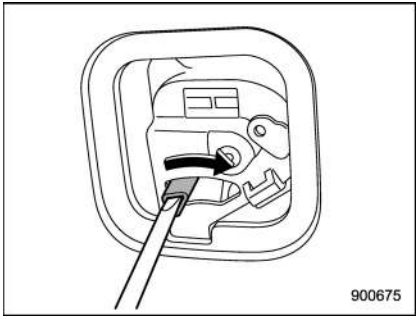

3. To open the rear gate, turn the lever to the right position using a flat-head screwdriver or a similar tool.

If your vehicle is involved in an accident

CAUTION

If your vehicle is involved in an accident, be sure to inspect the ground under the vehicle before restarting the engine. If you find that fuel has leaked on the ground, do not try to restart the engine. The fuel system has been damaged and is in need of repair. Immediately contact the nearest automotive service facility. We recommend that you consult your SUBARU dealer.

Your vehicle has a fuel pump shut off system. To minimize the risk of fire due to fuel leakage when your vehicle is subject to impact from an accident or another factor, the system stops supplying fuel. However, depending on the impact conditions at the time of collision, the fuel pump shut-off system may not operate.

Perform the following procedures to restart the engine after the system is activated.

Models without “keyless access with push-button start system”:

1. Turn the ignition switch to the “LOCK” or “ACC” position.
2. Restart the engine.

Models with “keyless access with push-button start system”:

1. Turn the push-button ignition switch to the “ACC” or “OFF” position.
2. Restart the engine.

Exterior care 10-2
Washing..... 10-2
Waxing and polishing..... 10-3
Cleaning aluminum wheels 10-3
Corrosion protection..... 10-4
Most common causes of corrosion 10-4
To help prevent corrosion..... 10-4
Cleaning the interior..... 10-5
Seat fabric..... 10-5
Leather seat materials..... 10-5
Synthetic leather upholstery..... 10-6
Climate control panel, audio panel, instrument panel, console panel, and switches 10-6
Monitor (if equipped)..... 10-6

Exterior care

■ Washing

CAUTION

- **When washing the vehicle, the brakes may get wet. As a result, the brake stopping distance will be longer. To dry the brakes, drive the vehicle at a safe speed while lightly depressing the brake pedal to heat up the brakes.**
- **Do not wash the engine compartment and area adjacent to it. If water enters the engine air intake or electrical parts, it will cause engine trouble or a malfunction of electrical equipment.**
- **When washing inner fenders, underbody, bumpers and protruding objects such as exhaust pipes, be careful to prevent injuries from contacting sharp ends.**
- **Do not use any organic solvents when washing the surface of the bulb assembly cover. However, if a detergent with organic solvents is used to wash the cover surface, completely rinse off the detergent with water. Otherwise, the cover surface may be damaged.**
- **Since your vehicle is equipped with a rear wiper, automatic carwash brushes could become tangled around it, damaging the wiper arm and other components. Ask the automatic carwash operator not to let the brushes touch the wiper arm or to fix the wiper arm on the rear window glass with adhesive tape before operating the machine.**

NOTE

When having your vehicle washed in an automatic car wash, make sure beforehand that the car wash is of suitable type.

The best way to preserve your vehicle's beauty is frequent washing. Wash the vehicle at least once a month to avoid contamination by road grime.

Wash dirt off with a wet sponge and plenty of lukewarm or cold water. Do not wash the vehicle with hot water and in direct sunlight.

Salt, chemicals, insects, tar, soot, tree sap, and bird droppings should be washed off by using a light detergent, as required. If you use a light detergent, make certain that it is a neutral detergent. Do not use strong soap or chemical detergents. All cleaning agents should be promptly flushed from the surface and not allowed to dry there. Rinse the vehicle thoroughly with plenty of lukewarm water. Wipe the remaining water off with a chamois or soft cloth. Wear rubber gloves and use a hand brush when washing down underbody, inner fenders and suspension to effectively remove mud and dirt off.

▼ Washing the underbody

Chemicals, salts and gravel used for deicing road surfaces are extremely corrosive, accelerating the corrosion of underbody components, such as the exhaust system, fuel and brake lines, brake cables, floor pan and fenders, and suspension.

Thoroughly flush the underbody and inside of the fenders with lukewarm or cold water at frequent intervals to reduce the harmful effects of such agents.

Mud and sand adhering to the underbody components may accelerate their corrosion.

After driving off-road or on muddy or sandy roads, wash the mud and sand off the underbody. Carefully flush the suspen-

sion and axle parts, as they are particularly prone to mud and sand buildup. Do not use a sharp-edged tool to remove caked mud.

⚠ CAUTION

- **Be careful not to damage brake hoses, sensor harnesses, and other parts when washing suspension components.**
- **Be careful not to flush the engine bottom for a long time. It may cause damage of some electrical parts.**

▼ Using a warm water washer

- Keep a good distance of 12 in (30 cm) or more between the washer nozzle and the vehicle.
- Do not wash the same area continuously.
- If a stain will not come out easily, wash by hand. Some warm water washers are of the high temperature, high pressure type, and they can damage or deform the resin parts such as moldings, or cause water to leak into the vehicle.

■ Waxing and polishing

Always wash and dry the vehicle before waxing and polishing.

Use a good quality polish and wax and apply them according to the manufacturer's instructions. Wax or polish when the painted surface is cool.

Be sure to polish and wax the chrome trim, as well as the painted surfaces. Loss of wax on a painted surface leads to loss of the original luster and also quickens the deterioration of the surface. It is recommended that a coat of wax be applied at least once a month, or whenever the surface no longer repels water.

If the appearance of the paint has diminished to the point where the luster or tone cannot be restored, lightly polish the surface with a fine-grained compound. Never polish just the affected area, but include the surrounding area as well. Always polish in only one direction. A No. 2000 grain compound is recommended. Never use a coarse-grained compound. Coarse-grained compounds have a smaller grain-size number and could damage the paint. After polishing with a compound, coat with wax to restore the original luster. Frequent polishing with a compound or an incorrect polishing technique will result in removing the paint layer and exposing the undercoat. When in doubt, it is always best to contact your SUBARU dealer or an auto paint specialist.

⚠ CAUTION

Do not use any agents with organic solvents on the surface of the bulb assembly cover. However, if a polish or wax with organic solvents is applied to the cover surface, completely wipe off the polish or wax. Otherwise, the cover surface may be damaged.

NOTE

Be careful not to block the windshield washer nozzles with wax when waxing the vehicle.

■ Cleaning aluminum wheels

- Promptly wipe the aluminum wheels clean of any kind of grime or agent. If dirt is left on too long, it may be difficult to clean off.
- Do not use soap containing grit to clean the wheels. Be sure to use a neutral cleaning agent, and later rinse thoroughly with water. Do not clean the wheels with a stiff brush or expose them to a high-speed

– CONTINUED –

washing device.

- Clean the vehicle (including the aluminum wheels) with water as soon as possible when it has been splashed with sea water, exposed to sea breezes, or driven on roads treated with salt or other agents.

Corrosion protection

Your SUBARU has been designed and built to resist corrosion. Special materials and protective finishes have been used on most parts of the vehicle to help maintain fine appearance, strength, and reliable operation.

■ Most common causes of corrosion

The most common causes of corrosion are:

- The accumulation of moisture retaining dirt and debris in body panel sections, cavities, and other areas.
- Damage to paint and other protective coatings caused by gravel and stone chips or minor accidents.

Corrosion is accelerated on the vehicle when:

- It is exposed to road salt or dust control chemicals, or used in coastal areas where there is more salt in the air, or in areas where there is considerable industrial pollution.
- It is driven in areas of high humidity, especially when temperatures range just above freezing.
- Dampness in certain parts of the vehicle remains for a long time, even though other parts of the vehicle may be dry.
- High temperatures will cause corrosion to parts of the vehicle which cannot dry quickly due to lack of proper ventilation.

■ To help prevent corrosion

Wash the vehicle regularly to prevent corrosion of the body and suspension components. Also, wash the vehicle promptly after driving on any of the following surfaces.

- roads that have been salted to prevent them from freezing in winter
- mud, sand, or gravel
- coastal roads

After the winter has ended, it is recommended that the underbody be given a very thorough washing.

Before the beginning of winter, check the condition of underbody components, such as the exhaust system, fuel and brake lines, brake cables, suspension, steering system, floor pan, and fenders. If any of them are found to be rusted, they should be given an appropriate rust prevention treatment or should be replaced. Contact your SUBARU dealer to perform this kind of maintenance and treatment if you need

assistance.

Repair chips and scratches in the paint as soon as you find them.

Check the interior of the vehicle for water and dirt accumulation under the floor mats because that could cause corrosion. Occasionally check under the mats to make sure the area is dry.

Keep your garage dry. Do not park your vehicle in a damp, poorly ventilated garage. In such a garage, corrosion can be caused by dampness. If you wash the vehicle in the garage or put the vehicle into the garage when wet or covered with snow, that can cause dampness.

If your vehicle is operated in cold weather and/or in areas where road salts and other corrosive materials are used, the door hinges and locks, and hood latch should be inspected and lubricated periodically.

Cleaning the interior

Use a soft, damp cloth to clean the climate control panel, audio equipment, instrument panel, center console, combination meter panel, and switches. (Do not use organic solvents.)

■ Seat fabric

Remove loose dirt, dust or debris with a vacuum cleaner. If the dirt is caked on the fabric or hard to remove with a vacuum cleaner, use a soft brush then vacuum it.

Wipe the fabric surface with a tightly wrung cloth and dry the seat fabric thoroughly. If the fabric is still dirty, wipe using a solution of mild soap and lukewarm water then dry thoroughly.

If the stain does not come out, try a commercially-available fabric cleaner. Use the cleaner on a hidden place and make sure it does not affect the fabric adversely. Use the cleaner according to its instructions.

⚠ CAUTION

When cleaning the seat, do not use benzine, paint thinner, or any similar materials. Doing so could damage the surface and cause the color to deteriorate.

■ Leather seat materials

The leather used by SUBARU is a high quality natural product which will retain its distinctive appearance and feel for many years with proper care.

Allowing dust or road dirt to build up on the surface can cause the material to become brittle and to wear prematurely. Regular cleaning with a soft, moist, natural fiber cloth should be performed monthly, taking care not to soak the leather or allow water to penetrate the stitched seams.

A mild detergent suitable for cleaning woolen fabrics may be used to remove difficult dirt spots, rubbing with a soft, dry cloth afterwards to restore the luster. If your SUBARU is to be parked for a long time in bright sunlight, it is recommended that the seats and head restraints be covered, or the windows shaded, to prevent fading or shrinkage. Make sure to remove the seat covers and head restraint covers when operating the vehicle.

Minor surface blemishes or bald patches may be treated with a commercial leather spray lacquer. You will discover that each leather seat section will develop soft folds or wrinkles, which is characteristic of

– CONTINUED –

genuine leather.

■ Synthetic leather upholstery

The synthetic leather material used on the SUBARU may be cleaned using mild soap or detergent and water, after first vacuuming or brushing away loose dirt. Allow the soap to soak in for a few minutes and wipe off with a clean, damp cloth. Commercial foam-type cleaners suitable for synthetic leather materials may be used when necessary.

⚠ CAUTION

Strong cleaning agents such as solvents, paint thinners, window cleaner or fuel must never be used on leather or synthetic interior materials. Doing so could damage the surface and cause the color to deteriorate.

■ Climate control panel, audio panel, instrument panel, console panel, and switches

Use a soft, damp cloth to clean the climate control panel, audio equipment, instrument panel, center console, combination meter panel, and switches.

⚠ CAUTION

- **Do not use organic solvents such as paint thinners or fuel, or strong cleaning agents that contain those solvents. Doing so could damage the surface and cause the color to deteriorate.**
- **Do not use chemical solvents that contain silicone on the vehicle audio system, electrical components of the air-conditioner or any switches. If silicone adheres to these parts, it may cause damage to electrical components.**

■ Monitor (if equipped)

To clean the audio/navigation/multi function display monitor, wipe it with a silicone cloth or with a soft cloth. If the monitor is extremely dirty, clean it with a soft cloth moistened with neutral detergent then carefully wipe off any remaining detergent.

⚠ CAUTION

- **Do not spray neutral detergent directly onto the monitor. Doing so could damage the monitor's components.**
- **Do not wipe the monitor with a hard cloth. Doing so could scratch the monitor.**
- **Do not use cleaning fluid that contains thinner, fuel, or any other volatile substance. Such cleaning fluid could erase the lettering on the switches at the bottom of the monitor.**

Maintenance schedule 11-3
Maintenance precautions..... 11-3
Before checking or servicing in the engine compartment..... 11-4
When checking or servicing in the engine compartment..... 11-4
When checking or servicing in the engine compartment while the engine is running..... 11-5
Engine hood 11-5
Engine compartment overview..... 11-7
Engine oil..... 11-8
Engine oil consumption..... 11-8
Checking the oil level 11-8
Changing the oil and oil filter..... 11-9
Recommended grade and viscosity 11-10
Synthetic oil..... 11-10
Cooling system 11-10
Safety precautions 11-10
Cooling fan, hose and connections..... 11-11
Engine coolant..... 11-11
Air cleaner element..... 11-12
Replacing the air cleaner element 11-13
Spark plugs 11-14
Recommended spark plugs 11-14
Drive belts 11-14
Manual transmission oil 11-14
Recommended grade and viscosity 11-14
Continuously variable transmission fluid..... 11-15
Front differential gear oil (CVT models) and rear differential gear oil 11-15
Recommended grade and viscosity 11-15
Brake fluid..... 11-15
Checking the fluid level..... 11-15
Recommended brake fluid 11-16
Clutch fluid (MT models)..... 11-16
Checking the fluid level..... 11-16
Recommended clutch fluid..... 11-17
Brake booster 11-17
Brake pedal 11-18
Checking the brake pedal free play 11-18
Checking the brake pedal reserve distance..... 11-18
Clutch pedal (MT models) 11-18
Checking the clutch function..... 11-18
Checking the clutch pedal free play..... 11-19
Hill start assist system..... 11-19
Replacement of brake pad and lining 11-19
Breaking-in of new brake pads and linings 11-20
Parking brake stroke 11-20
Tires and wheels..... 11-21
Types of tires..... 11-21
Tire pressure monitoring system (TPMS) (if equipped) 11-21
Tire inspection..... 11-23
Tire pressures and wear 11-23
Wheel balance 11-25
Wear indicators 11-25
Tire rotation direction mark..... 11-26
Tire rotation..... 11-26
Tire replacement..... 11-26
Wheel replacement 11-27

Aluminum wheels **11-28**
Windshield washer fluid **11-28**
Adding the windshield washer fluid 11-28
Windshield washer fluid 11-29
Replacement of wiper blades **11-29**
Windshield wiper blade assembly 11-30
Windshield wiper blade rubber 11-30
Rear window wiper blade assembly 11-31
Rear window wiper blade rubber 11-32
Battery **11-33**
Fuses **11-34**
Installation of accessories **11-36**
Replacing bulbs **11-36**
Headlights (models with HID headlights) 11-36
Headlights (models without HID headlights) 11-37
Front turn signal light 11-38
Parking light 11-38
Front fog light 11-38
Rear combination lights 11-38
License plate light 11-40
Map light 11-40
Dome light and cargo area light 11-41
Other bulbs 11-41
Replacing key battery **11-42**
Safety precautions 11-42
Replacing battery of access key 11-42
Replacing transmitter battery 11-43

Maintenance schedule

U.S. models

The scheduled maintenance items required to be serviced at regular intervals are shown in the “Warranty and Maintenance Booklet”. For details, read the separate “Warranty and Maintenance Booklet”.

Canada models

The scheduled maintenance items required to be serviced at regular intervals are shown in the “Warranty and Service Booklet”. For details, read the separate “Warranty and Service Booklet”.

Except for U.S. and Canada models

Some items of your vehicle are required to be serviced at scheduled intervals. For details about your maintenance schedule, read the separate “Warranty and Maintenance Booklet”.

NOTE

For models with a multi function display, you can set a reminder to be displayed when a scheduled maintenance item is almost due. For details, refer to “Maintenance settings” ☞3-73.

Maintenance precautions

When maintenance and service are required, it is recommended that all work be done by an authorized SUBARU dealer.

If you perform maintenance and service by yourself, you should familiarize yourself with the information provided in this section on general maintenance and service for your SUBARU.

Incorrect or incomplete service could cause improper or unsafe vehicle operation. Any problems caused by improper maintenance and service performed by you are not eligible for warranty coverage.

⚠ WARNING

- **Always select a safe area when performing maintenance on your vehicle.**
- **Always be very careful to avoid injury when working on the vehicle. Remember that some of the materials in the vehicle may be hazardous if improperly used or handled, for example, battery acid.**
- **Your vehicle should only be serviced by persons fully competent to do so. Serious personal injury may result to persons not experienced in servicing vehicles.**
- **Always use the proper tools and make certain that they are well maintained.**
- **Never get under the vehicle supported only by a jack. Always use safety stands to support the vehicle.**
- **Never keep the engine running in a poorly ventilated area, such as a garage or other closed areas.**
- **Do not smoke or allow open flames around the fuel or battery. This will cause a fire.**
- **Because the fuel system is under pressure, replacement of the fuel filter should be performed only by your SUBARU dealer.**
- **Wear adequate eye protection to guard against getting oil or fluids in your eyes. If something does get in your eyes, thoroughly wash them out with clean water.**
- **Do not tamper with the wiring of the SRS airbag system or seatbelt pretensioner system, or attempt to take its connectors apart, as that may activate the system or it can render it inop-**

– CONTINUED –

erative. NEVER use a circuit tester for this wiring. If your SRS airbag or seatbelt pretensioner needs service, consult your nearest SUBARU dealer.

NOTE

SUBARU does not endorse the use of non-SUBARU approved flushing systems and strongly advises against performing these services on a SUBARU vehicle. Non-SUBARU approved flushing systems use chemicals and/or solvents which have not been tested or approved by SUBARU. SUBARU warranties do not cover any part of the vehicle which is damaged by adding or applying chemicals and/or solvents other than those approved or recommended by SUBARU.

■ Before checking or servicing in the engine compartment

⚠ WARNING

- Always stop the engine and apply the parking brake firmly to prevent the vehicle from moving.
- Always let the engine cool down. Engine parts become very hot when the engine is running and remain hot for some time after the engine has stopped.
- Do not spill engine oil, engine coolant, brake fluid or any other fluid on hot engine components. This may cause a fire.
- When the ignition switch is in the "ON" position, the cooling fan may operate suddenly even when the engine is stopped. If your body or clothes come into contact with a rotating fan, that could result in serious injury. To avoid risk of injury, perform the following precautions.
  - Models with push-button start system:
    Always turn the push-button ignition switch to the "OFF" position and confirm that the operation indicator on the switch is turned off. Then take the access key out from the vehicle.
  - Models without push-button start system:
    Always remove the key from the ignition switch.
- Before performing any servicing on a vehicle equipped with a remote engine start system (a dealer option), temporarily place the remote engine start system in service mode to prevent it from unexpectedly starting the engine.

■ When checking or servicing in the engine compartment

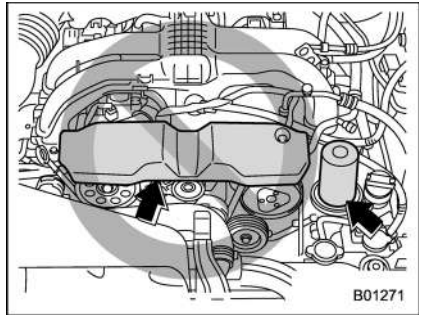

⚠ CAUTION

- Do not contact the drive belt cover while checking the components in the engine compartment. Doing so may cause your hand to slip off the cover and result in an unexpected injury.
- Do not touch the oil filter until the

engine has cooled down completely. Doing so may result in a burn or other injury. Note that the oil filter becomes very hot when the engine is running and remains hot for some time after the engine has stopped.

■ When checking or servicing in the engine compartment while the engine is running

WARNING

A running engine can be dangerous. Keep your fingers, hands, clothing, hair and tools away from the cooling fan, drive belt and any other moving engine parts. Removing rings, watches and ties is advisable.

Engine hood

CAUTION

- **When you open the engine hood, do not stand the wiper blades up. Furthermore, while the hood is open, do not operate the windshield wipers. Doing so could result in damage to the engine hood and wiper blades.**
- **Be extremely careful not to catch fingers or other objects when closing the engine hood.**
- **Do not push the hood forcibly to close it. It could deform the metal.**
- **Be extremely careful opening the engine hood when the wind is strong. The engine hood could close suddenly, possibly causing injuries from slamming.**
- **Do not install accessories other than genuine SUBARU parts to the engine hood. If the engine hood becomes too heavy, the stay may not be able to support holding it open.**

To open the hood:

1. If the wiper blades are lifted off the windshield, return them to their original position.

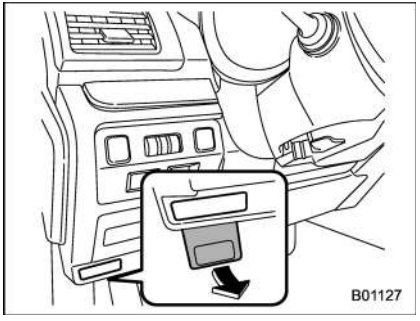

2. Pull the hood release knob under the instrument panel.

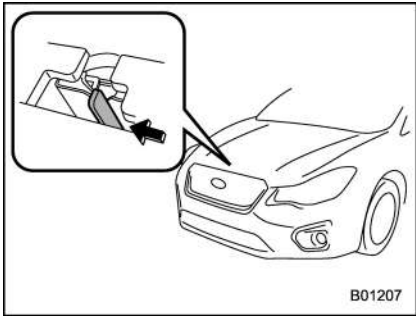

– CONTINUED –

3. Release the secondary hood release by moving the lever between the front grille and the hood toward the left.

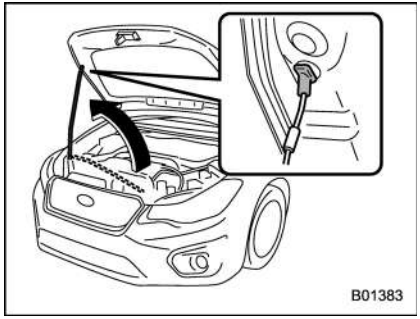

4. Lift up the hood, release the hood prop from its retainer and put the end of the hood prop into the slot in the hood.

To close the hood:

1. Lift the hood slightly and remove the hood prop from the slot in the hood and return the prop to its retainer.
2. Lower the hood to a height of approximately 5.9 in (15 cm) above its closed position and then let it drop.
3. After closing the hood, be sure the hood is securely locked.

If this does not close the hood, release it from a slightly higher position.

WARNING

Always check that the hood is properly locked before you start driving. If it is not, it might fly open while the vehicle is moving and block your view, which may cause an accident and serious bodily injury.

Engine compartment overview

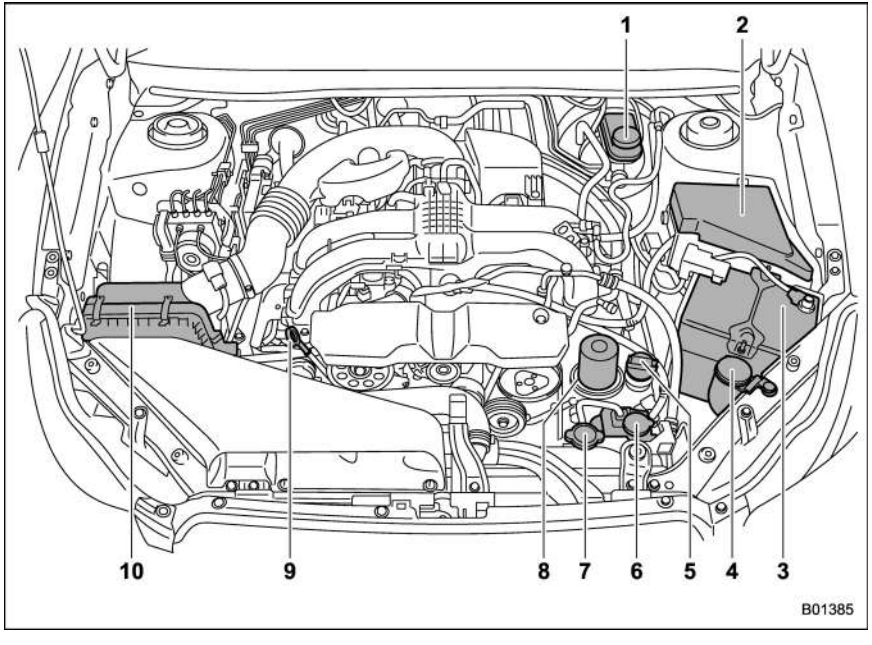

1) Brake fluid reservoir/Clutch fluid reservoir (MT) (page 11-15)
2) Fuse box (page 11-34)
3) Battery (page 11-33)
4) Windshield washer tank (page 11-28)
5) Engine oil filler cap (page 11-8)
6) Engine coolant reservoir (page 11-11)
7) Radiator cap (page 11-11)
8) Engine oil filter (page 11-9)
9) Engine oil level gauge (page 11-8)
10) Air cleaner case (page 11-12)

Engine oil

CAUTION

- **If the level gauge cannot be pulled out easily, twist the level gauge right and left, then gently pull it out. Otherwise, you may be injured accidentally straining yourself.**
- **Use only engine oil with the recommended grade and viscosity.**
- **Be careful not to spill engine oil when adding it. If oil touches the exhaust pipe, it may cause a bad smell, smoke, and/or a fire. If engine oil gets on the exhaust pipe, be sure to wipe it off.**

■ Engine oil consumption

Some engine oil will be consumed while driving. The rate of consumption can be affected by such factors as transmission type, driving style, terrain and temperature. Under the following conditions, oil consumption can be increased and thus require refilling between maintenance intervals:

- When the engine is new and within the break-in period
- When the engine oil is of lower quality
- When the incorrect oil viscosity is used
- When engine braking is employed (repeatedly)
- When the engine is operated at high engine speeds (for extended periods of time)
- When the engine is operated under heavy loads (for extended periods of time)
- When towing a trailer
- When the engine idles for extended periods of time
- When the vehicle is operated in stop and go and/or heavy traffic situations
- When the vehicle is used under severe thermal conditions
- When the vehicle accelerates and decelerates frequently

Under these or similar conditions, you should check your oil at least every 2nd fuel fill-up and change your engine oil more frequently. Different drivers in the same car may experience different results. If your oil consumption rate is greater than expected, contact your authorized SUBARU retailer who may perform a test under controlled conditions.

■ Checking the oil level

1. Park the vehicle on a level surface and turn the ignition switch to the “LOCK”/“OFF” position. If you check the oil level just after turning the ignition switch to the “LOCK”/“OFF” position, wait a few minutes for the oil to drain back into the oil pan before checking the level.

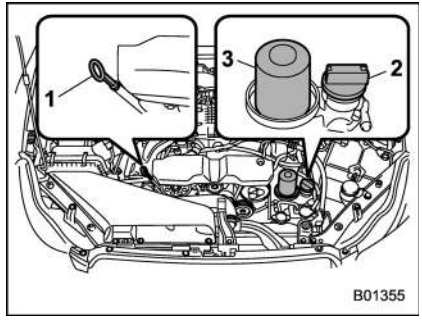

1) Oil level gauge
2) Oil filler cap
3) Oil filter

CAUTION

If the level gauge cannot be pulled out easily, twist the level gauge right and left, then gently pull it out. Otherwise, you may be injured accidentally straining yourself.

2. Pull out the level gauge, wipe it clean, and insert it again.
3. Be sure the level gauge is correctly inserted until it stops.

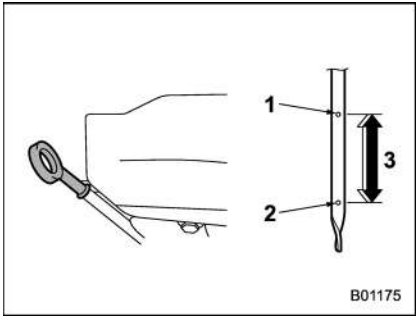

1) Full level
2) Low level
3) Approximately 1.1 US qt (1.0 liter, 0.9 Imp qt) from low level to full level

4. Pull out the oil level gauge again.
5. Check the oil levels on both sides of the level gauge. The engine oil level must be judged by the lowest of the two levels. If the oil level is below the low level mark, add oil so that the full level is reached.

CAUTION

- **Be careful not to touch the engine oil filter when removing the oil filler cap. Doing so may result in a burn, a pinched finger, or may cause some other injury.**
- **Use only engine oil with the recommended grade and viscosity.**
- **Be careful not to spill engine oil when adding it. If oil touches the exhaust pipe, it may cause a bad smell, smoke, and/or a fire. If engine oil gets on the exhaust pipe, be sure to wipe it off.**

To add engine oil, remove the engine oil filler cap and slowly pour engine oil through the filler neck. After pouring oil into the engine, you must use the level gauge to confirm that the oil level is correct.

NOTE

To prevent overfilling the engine oil, do not add any additional oil above the upper level when the engine is cold.

■ Changing the oil and oil filter

Change the oil and oil filter according to the maintenance schedule in the “Warranty and Maintenance Booklet”.

The engine oil and oil filter must be changed more frequently than listed in the maintenance schedule when driving on dusty roads, when short trips are frequently made, or when driving in extremely cold weather.

NOTE

- **Changing the engine oil and oil filter should be performed by a well-trained expert. Contact your SUBARU dealer for changing the engine oil and oil filter. Fully trained mechanics are on standby at a SUBARU dealer to utilize the special tools, spare parts and recommended oil for this work, and also, used oils are properly disposed of.**
- **If performing oil replacement yourself, observe the local regulations and dispose of waste oil properly.**

– CONTINUED –

■ Recommended grade and viscosity

CAUTION

Use only engine oil with the recommended grade and viscosity.

Refer to “Engine oil” ☞12-4.

NOTE

Engine oil viscosity (thickness) affects fuel economy. Oils of lower viscosity provide better fuel economy. However, in hot weather, oil of higher viscosity is required to properly lubricate the engine.

■ Synthetic oil

You should use synthetic engine oil that meets the same requirements given for conventional engine oil. When using synthetic oil, you must use oil of the same classification, viscosity and grade shown in this Owner’s Manual. Refer to “Engine oil” ☞12-4. Also, you must follow the oil and filter changing intervals shown in the Warranty and Maintenance booklet.

NOTE

Synthetic oil of the grade and viscosity noted in chapter 12 is the recommended engine oil for optimum engine performance. Conventional oil may be used if synthetic oil is unavailable.

Cooling system

■ Safety precautions

WARNING

Never attempt to remove the radiator cap until the engine has been shut off and has cooled down completely. Since the coolant is under pressure, you may suffer serious burns from a spray of boiling hot coolant when the cap is removed.

CAUTION

- **Vehicles are filled at the factory with SUBARU Super Coolant that does not require the first change for 11 years/137,500 miles (11 years/220,000 km). This coolant should not be mixed with any other brand or type of coolant during this period. Mixing with a different coolant will reduce the life of the coolant. Should it be necessary to top up the coolant for any reason, use only SUBARU Super Coolant.**

  If the SUBARU Super Coolant is

diluted with another brand or type, the maintenance interval is shortened to that of the mixing coolant.

- **Do not splash the engine coolant over painted parts. The alcohol contained in the engine coolant may damage the paint surface.**

■ Cooling fan, hose and connections

Your vehicle employs an electric cooling fan which is thermostatically controlled to operate when the engine coolant reaches a specific temperature.

If the radiator cooling fan does not operate even when the coolant temperature high warning light blinks or illuminates in **RED**, the cooling fan circuit may be defective. Refer to “Coolant temperature low indicator light/Coolant temperature high warning light” ☞3-17.

Check the fuse and replace it if necessary. Refer to “Fuses” ☞11-34 and “Fuse panel located in the engine compartment” ☞12-11.

If the fuse is not blown, have the cooling system checked by your SUBARU dealer.

If frequent addition of coolant is necessary, there may be a leak in the engine cooling system. It is recommended that the cooling system and connections be checked for leaks, damage, or looseness.

■ Engine coolant

▼ Checking the coolant level

⚠ WARNING

Never attempt to remove the radiator cap until the engine has been shut off and has cooled down completely. Since the coolant is under pressure, you may suffer serious burns from a spray of boiling hot coolant when the cap is removed.

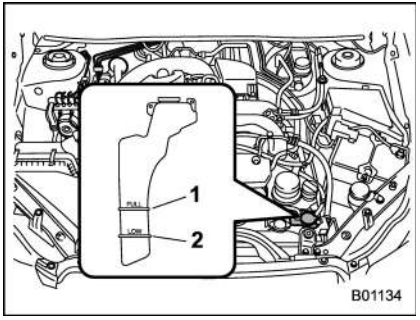

1) “FULL” level mark
2) “LOW” level mark

Check the coolant level at each fuel stop.

1. Check the coolant level on the outside of the reservoir while the engine is cool.
2. If the level is close to or lower than the “LOW” level mark, add coolant up to the “FULL” level mark. If the reserve tank is empty, remove the radiator cap and refill coolant up to just below the filler neck as shown in the following illustration.

– CONTINUED –

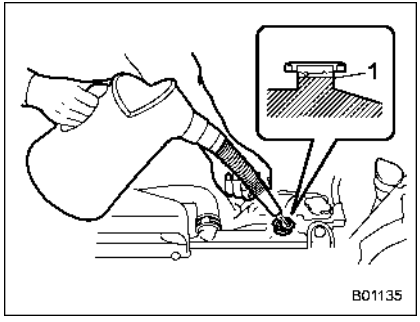

1) Fill up to this level

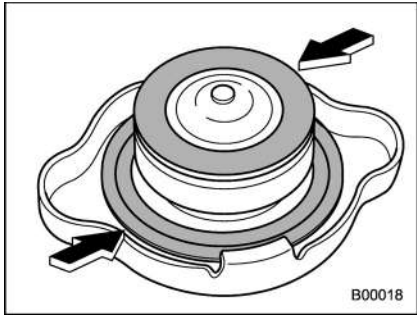

3. After refilling the reserve tank and the radiator, reinstall the cap and check that the rubber gaskets inside the radiator cap are in the proper position.

CAUTION

- **Be careful not to spill engine coolant when adding it. If coolant touches the exhaust pipe, it may cause a bad smell, smoke, and/or a fire. If engine coolant gets on the exhaust pipe, be sure to wipe it off.**
- **Do not splash the engine coolant over painted parts. The alcohol contained in the engine coolant may damage the paint surface.**

▼ Changing the coolant

It may be difficult to change the coolant. Have the coolant changed by your SUBARU dealer if necessary.

The coolant should be changed according to the maintenance schedule in the “Warranty and Maintenance Booklet”.

Air cleaner element

WARNING

Do not operate the engine with the air cleaner element removed. The air cleaner element not only filters intake air but also stops flames if the engine backfires. If the air cleaner element is not installed when the engine backfires, you could be burned.

CAUTION

When replacing the air cleaner element, use a genuine SUBARU air cleaner element. If it is not used, there is the possibility of causing a negative effect to the engine.

The air cleaner element functions as a filter screen. When the element is perforated or removed, engine wear will be excessive and engine life shortened.

It is not necessary to clean or wash the air cleaner element.

■ Replacing the air cleaner element

Replace the air cleaner element according to the maintenance schedule in the “Warranty and Maintenance Booklet”. Under extremely dusty conditions, replace it more frequently. It is recommended that you always use genuine SUBARU parts.

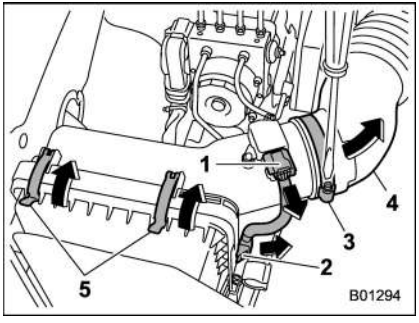

1) Connector
2) Clip
3) Clamp
4) Air intake boot
5) Clip

1. Unplug the connector that is attached to the top of the air cleaner case.
2. Detach the connector cable from the clip on the right side of the air cleaner case.
3. Loosen the screw on the clamp and pull the air intake boot out of the air cleaner case.
4. Unsnap the two clips holding the air cleaner case (rear).

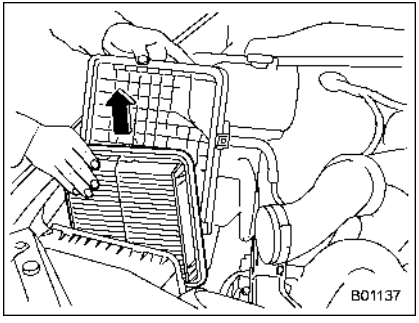

5. Open the air cleaner case and remove the air cleaner element.
6. Clean the inside of the air cleaner case (both front and rear) with a damp cloth and install a new air cleaner element.

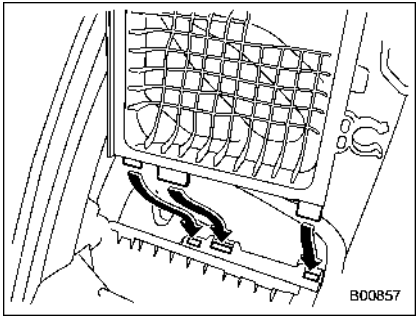

7. To install the air cleaner case (rear), insert the three projections on the air cleaner case (rear) into the slits on the air cleaner case (front).
8. Install in the reverse order of removal.

Spark plugs

It may be difficult to replace the spark plugs. It is recommended that you have the spark plugs replaced by your SUBARU dealer.

The spark plugs should be replaced according to the maintenance schedule in the “Warranty and Maintenance Booklet”.

CAUTION

Make sure the cables are replaced in the correct order.

■ Recommended spark plugs

For the recommended spark plugs, refer to “Electrical system” ☞12-7.

Drive belts

It is unnecessary to check the deflection of the drive belt periodically because your engine is equipped with an automatic belt tension adjuster. However, replacement of the belt should be done according to the maintenance schedule in the “Warranty and Maintenance Booklet”. Consult your SUBARU dealer for replacement.

If the drive belt is loose, cracked or worn, contact your SUBARU dealer.

Manual transmission oil

It is not necessary to check the transmission oil level. Check that there are no cracks, damage or leakage. However, the oil inspection should be performed according to the maintenance schedule in the “Warranty and Maintenance Booklet”. Consult your SUBARU dealer for details.

■ Recommended grade and viscosity

Each oil manufacturer has its own base oils and additives. Never use different brands together. For details, refer to “Manual transmission, front differential and rear differential gear oil” ☞12-6.

Continuously variable transmission fluid

It is not necessary to check the transmission fluid level. Check that there are no cracks, damage or leakage. However, the fluid inspection should be performed according to the maintenance schedule in the “Warranty and Maintenance Booklet”. Consult your SUBARU dealer for details.

Front differential gear oil (CVT models) and rear differential gear oil

It is not necessary to check the gear oil level. Check that there are no cracks, damage or leakage. However, the oil inspection should be performed according to the maintenance schedule in the “Warranty and Maintenance Booklet”. Consult your SUBARU dealer for details.

■ Recommended grade and viscosity

Each oil manufacturer has its own base oils and additives. Never use different brands together. For details, refer to “Manual transmission, front differential and rear differential gear oil” ☞12-6.

CAUTION

Using a differential gear oil other than the specified oil may cause a decline in vehicle performance.

Brake fluid

■ Checking the fluid level

WARNING

- **Never let brake fluid contact your eyes because brake fluid can be harmful to your eyes. If brake fluid gets in your eyes, immediately flush them thoroughly with clean water. For safety, when performing this work, wearing eye protection is advisable.**
- **Brake fluid absorbs moisture from the air. Any absorbed moisture can cause a dangerous loss of braking performance.**
- **If the vehicle requires frequent refilling, there may be a leak. If you suspect a problem, have the vehicle checked at your SUBARU dealer.**

CAUTION

- **When adding brake fluid, be careful not to allow any dirt into the reservoir.**
- **Never splash the brake fluid over painted surfaces or rubber parts.**

– CONTINUED –

Alcohol contained in the brake fluid may damage them.

- **Be careful not to spill brake fluid when adding it. If brake fluid touches the exhaust pipe, it may cause a bad smell, smoke, and/or a fire. If brake fluid gets on the exhaust pipe, be sure to wipe it off.**

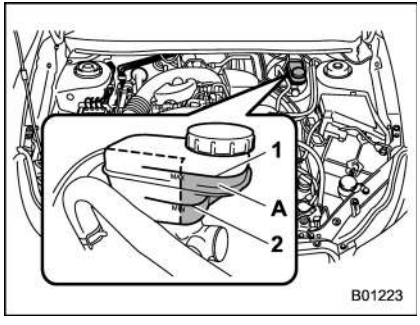

1) "MAX" level line
2) "MIN" level line
A) The brake fluid level must be checked in this area.

Check the fluid level monthly.

Check the fluid level on the outside of the reservoir. Be sure to check the fluid level for the brake system at the **front part of the reservoir** (shaded area in the illustration). For MT models, this reservoir is used for both the brake and clutch systems and has chambers for each system.

If the fluid level is below "MIN", add the recommended brake fluid to "MAX". Use only brake fluid from a sealed container.

■ Recommended brake fluid

Refer to "Fluids" ☞12-7.

⚠ CAUTION

Never use different brands of brake fluid together. Also, avoid mixing DOT 3 and DOT 4 brake fluids even if they are the same brand.

Clutch fluid (MT models)

■ Checking the fluid level

⚠ WARNING

Never let clutch fluid contact your eyes because clutch fluid can be harmful to your eyes. If clutch fluid gets in your eyes, immediately flush them thoroughly with clean water. For safety, when performing this work, wearing eye protection is advisable.

⚠ CAUTION

- **Clutch fluid absorbs moisture from the air. Any absorbed moisture can cause improper clutch operation.**
- **If the vehicle requires frequent refilling, there may be a leak. If you suspect a problem, have the vehicle checked at your SUBARU dealer.**
- **When clutch fluid is added, be careful not to allow any dirt into the tank.**
- **Never splash the clutch fluid over painted surfaces or rubber parts.**

Alcohol contained in the clutch fluid may damage them.

- **Be careful not to spill clutch fluid when adding it. If clutch fluid touches the exhaust pipe, it may cause a bad smell, smoke, and/or a fire. If clutch fluid gets on the exhaust pipe, be sure to wipe it off.**
- **The fluid level for the clutch system must be checked at the inboard side of the reservoir. It cannot be checked at the outboard side of the reservoir.**

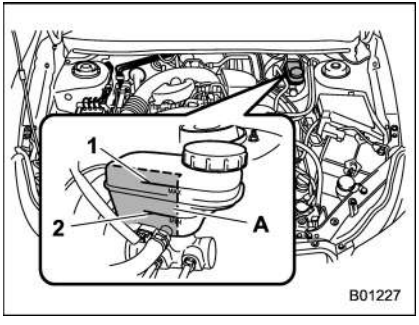

1) "MAX" level line
2) "MIN" level line
A) The clutch fluid level must be checked in this area.

Check the fluid level monthly.

Check the fluid level on the outside of the reservoir. Because this reservoir is used for both the brake and clutch systems and has chambers for each system, be sure to check the fluid level for the clutch system at the **inboard side of the reservoir** (shaded area in the illustration). If the fluid level is below "MIN", add the recommended clutch fluid to "MAX".

Use only clutch fluid from a sealed container.

■ Recommended clutch fluid

Refer to "Fluids" ☞12-7.

⚠ CAUTION

Never use different brands of clutch fluid together. Also, avoid mixing DOT 3 and DOT 4 brake fluids even if they are the same brand.

Brake booster

If the brake booster does not operate as described in the following, have it checked by your SUBARU dealer.

1. With the ignition switch in the "LOCK"/"OFF" position, depress the brake pedal several times, applying the same pedal force each time. The distance the pedal travels should not vary.
2. With the brake pedal depressed, start the engine. The pedal should move slightly down to the floor.
3. With the brake pedal depressed, stop the engine and keep the pedal depressed for 30 seconds. The pedal height should not change.
4. Start the engine again and run for approximately one minute then turn it off. Depress the brake pedal several times to check the brake booster. The brake booster operates properly if the pedal stroke decreases with each depression.

Brake pedal

Check the brake pedal free play and reserve distance according to the maintenance schedule in the “Warranty and Maintenance Booklet”.

■ Checking the brake pedal free play

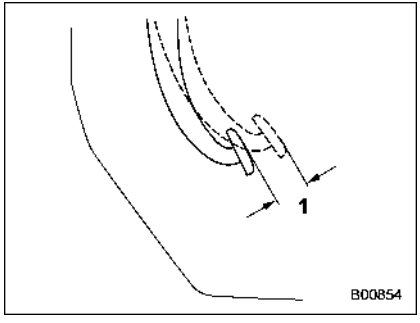

1) 0.02 – 0.11 in (0.5 – 2.7 mm)

Turn the ignition switch to the “LOCK”/ “OFF” position and firmly depress the brake pedal several times. Lightly pull the brake pedal up with one finger to check the free play with a force of less than 2 lbf (10 N, 1 kgf).

If the free play is not within proper specification, contact your SUBARU dealer.

■ Checking the brake pedal reserve distance

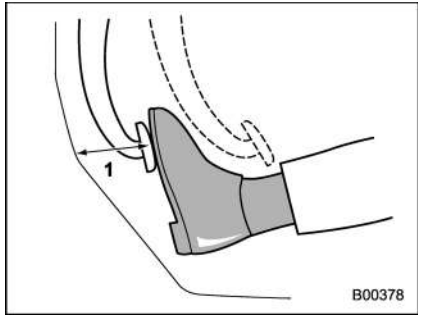

1) More than 2.56 in (65 mm)

Depress the pedal with a force of approximately 66 lbf (294 N, 30 kgf) and measure the distance between the upper surface of the pedal pad and the floor.

When the measurement is smaller than the specification, or when the pedal does not operate smoothly, contact with your SUBARU dealer.

Clutch pedal (MT models)

Check the clutch pedal free play according to the maintenance schedule in the “Warranty and Maintenance Booklet”.

■ Checking the clutch function

Check the clutch engagement and disengagement.

1. With the engine idling, check that there are no abnormal noises when the clutch pedal is depressed, and that shifting into 1st or reverse feels smooth.
2. Start the vehicle by releasing the pedal slowly to check that the engine and transmission smoothly couple without any sign of slippage.

■ Checking the clutch pedal free play

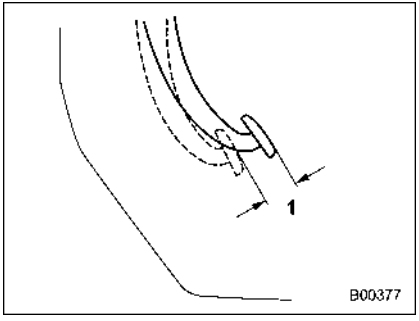

1) 0.16 – 0.43 in (4.0 – 11.0 mm)

Lightly depress the clutch pedal down with your finger until you feel resistance, and check the free play.

If the free play is not within proper specification, contact your SUBARU dealer.

Hill start assist system

Ensure that the Hill start assist system operates properly under the following circumstances.

1. Stop the vehicle on an uphill grade by depressing the brake pedal (all models) and clutch pedal (MT models only), with the engine running.
2. Make sure that the vehicle does not move backward for several seconds after the brake pedal is released.
3. Then make sure the vehicle starts climbing the grade by following the normal starting procedures.

If the Hill start assist system does not operate as described above, contact your SUBARU dealer.

Replacement of brake pad and lining

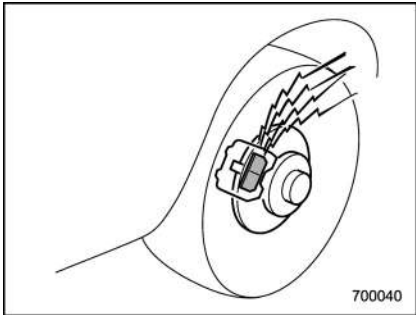

The disc brakes have audible wear indicators on the brake pads. If the brake pads wear close to their service limit, the wear indicator makes a very audible scraping noise when the brake pedal is applied.

If you hear this scraping noise each time you apply the brake pedal, have the brake pads serviced by your SUBARU dealer as soon as possible.

– CONTINUED –

CAUTION

If you continue to drive despite the scraping noise from the audible brake pad wear indicator, it will result in the need for costly brake rotor repair or replacement.

■ Breaking-in of new brake pads and linings

When replacing the brake pad or lining, use only genuine SUBARU parts. After replacement, the new parts must be broken in as follows.

▼ Brake pad and lining

While maintaining a speed of 30 to 40 mph (50 to 65 km/h), step on the brake pedal lightly. Repeat this five or more times.

▼ Parking brake lining

1. Drive the vehicle at a speed of approximately 22 mph (35 km/h).
2. With the parking brake release button pushed in, pull the parking brake lever SLOWLY and GENTLY (pulling with a force of approximately 33.7 lbf [150 N, 15.3 kgf]).
3. Drive the vehicle for approximately 220 yards (200 meters) in this condition.
4. Wait 5 to 10 minutes for the parking brake to cool down. Repeat this procedure.
5. Check the parking brake stroke. If the parking brake stroke is out of the specified range, adjust it by turning the adjusting nut located on the parking brake lever.

Parking brake stroke:
7 – 8 notches / 45 lbf (200 N, 20.4 kgf)

WARNING

A safe location and situation should be selected for break-in driving.

CAUTION

Pulling the parking brake lever too forcefully may cause the rear wheels to lock. To avoid this, be certain to pull the lever up slowly and gently.

Parking brake stroke

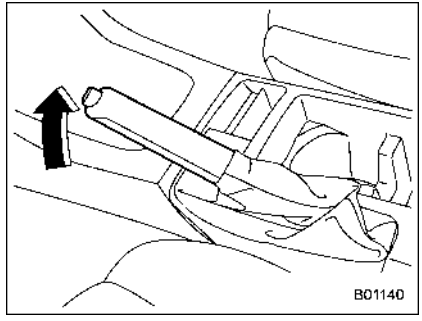

Check the parking brake stroke according to the maintenance schedule in the “Warranty and Maintenance Booklet”. When the parking brake is properly adjusted, braking power is fully applied by pulling the lever up 7 to 8 notches gently but firmly (approximately 45 lbf [200 N, 20.4 kgf]). If the parking brake lever stroke is not within the specified range, have the brake system checked and adjusted at your SUBARU dealer.

Tires and wheels

■ Types of tires

You should be familiar with type of tires present on your vehicle.

▼ All season tires

All season tires are designed to provide an adequate measure of traction, handling and braking performance in year-round driving including snowy and icy road conditions. However all season tires do not offer as much traction performance as winter (snow) tires in heavy or loose snow or on icy roads.

All season tires are identified by “ALL SEASON” and/or “M+S” (Mud & Snow) on the tire sidewall.

▼ Summer tires

Summer tires are high-speed capability tires best suited for highway driving under dry conditions.

Summer tires are inadequate for driving on slippery roads such as on snow-covered or icy roads.

If you drive your vehicle on snow-covered or icy roads, we strongly recommend the use of winter (snow) tires.

When installing winter tires, be sure to replace all four tires.

▼ Winter (snow) tires

Winter tires are best suited for driving on snow-covered and icy roads. However winter tires do not perform as well as summer tires and all season tires on roads other than snow-covered and icy roads.

■ Tire pressure monitoring system (TPMS) (if equipped)

The tire pressure monitoring system provides the driver with a warning message by sending a signal from a sensor that is installed in each wheel when tire pressure is severely low. The tire pressure monitoring system will activate only when the vehicle is driven. Also, this system may not react immediately to a sudden drop in tire pressure (for example, a blow-out caused by running over a sharp object).

If you adjust the tire pressures in a warm garage and will then drive the vehicle in cold outside air, the resulting drop in tire pressures may cause the low tire pressure warning light to illuminate. To avoid this problem when adjusting the tire pressures in a warm garage, inflate the tires to pressures higher than those shown on the tire placard. Specifically, inflate them by an extra 1 psi (6.9 kPa, 0.07 kgf/cm^2) for every difference of 10°F (5.6°C) between the temperature in the garage and the temperature outside. By way of example, the following table shows the required tire pressures that correspond to various outside temperatures when the temperature in the garage is 60°F (15.6°C).

Example:

Tire size: P205/55R16 89V and P205/50R17 88V

Standard tire pressures:

Front: 33 psi (230 kPa, 2.3 kgf/cm^2)

Rear: 32 psi (220 kPa, 2.2 kgf/cm^2)

Garage temperature: 60°F (15.6°C)

Outside temperature	Adjusted pressure [psi (kPa, kgf/cm^2)]	
	Front	Rear
30°F (−1°C)	36 (250, 2.5)	35 (240, 2.4)
10°F (−12°C)	38 (265, 2.65)	37 (255, 2.55)
−10°F (−23°C)	40 (280, 2.8)	39 (270, 2.7)

If the low tire pressure warning light illuminates when you drive the vehicle in cold outside air after adjusting the tire pressures in a warm garage, re-adjust the tire pressures using the method described above. Then, increase the vehicle speed to at least 20 mph (32 km/h) and check to see that the low tire pressure warning light turns off a few minutes later. If the low tire pressure warning light does not turn off,

– CONTINUED –

the tire pressure monitoring system may not be functioning normally. In this event, go to a SUBARU dealer to have the system inspected as soon as possible.

While the vehicle is driven, friction between tires and the road surface causes the tires to warm up. After illumination of the low tire pressure warning light, any increase in the tire pressures caused by an increase in the outside air temperature or by an increase in the temperature in the tires can cause the low tire pressure warning light to turn off.

System resetting is necessary when the wheels are changed (for example, a switch to snow tires) and new TPMS valves are installed on the newly fitted wheels. Have this work performed by a SUBARU dealer following wheel replacement.

It may not be possible to install TPMS valves on certain wheels that are on the market. Therefore, if you change the wheels (for example, a switch to snow tires), use wheels that have the same part number as the standard-equipment wheels. Without four operational TPMS valve/sensors on the wheels, the TPMS will not fully function and the warning light on the combination meter will illuminate steadily after blinking for approximately one minute.

When a tire is replaced, adjustments are necessary to ensure continued normal operation of the tire pressure monitoring system. As with wheel replacement, therefore, you should have the work performed by a SUBARU dealer.

WARNING

If the low tire pressure warning light does not illuminate briefly after the ignition switch is turned ON or the light illuminates steadily after blinking for approximately one minute, you should have your Tire Pressure Monitoring System checked at a SUBARU dealer as soon as possible.

If this light illuminates while driving, never brake suddenly. Instead, perform the following procedure. Otherwise an accident involving serious vehicle damage and serious personal injury could occur.

1) **Keep driving straight ahead while gradually reducing speed.**
2) **Slowly pull off the road to a safe place.**

If this light still illuminates while driving after adjusting the tire pressure, a tire may have significant damage and a fast leak that causes the tire to lose air rapidly. If you have a flat tire, replace it with a spare tire as soon as possible.

When a spare tire is mounted or a wheel rim is replaced without the original pressure sensor/transmitter being transferred, the low tire pressure warning light will illuminate steadily after blinking for approximately one minute. This indicates the TPMS is unable to monitor all four road wheels. Contact your SUBARU dealer as soon as possible for tire and sensor replacement and/or system resetting. If the light illuminates steadily after blinking for approximately one minute, promptly contact a SUBARU dealer to have the system inspected.

■ Tire inspection

Check on a daily basis that the tires are free from serious damage, nails, and stones. At the same time, check the tires for abnormal wear.

Contact your SUBARU dealer immediately if you find any problem.

NOTE

● When the wheels and tires strike curbs or are subjected to harsh treatment as when the vehicle is driven on a rough surface, they can suffer damage that cannot be seen with the naked eye. This type of damage does not become evident until time has passed. Try not to drive over curbs, potholes or on other rough surfaces. If doing so is unavoidable, keep the vehicle's speed down to a walking pace or less, and approach the curbs as squarely as possible. Also, make sure the tires are not pressed against the curb when you park the vehicle.

● If you feel unusual vibration while driving or find it difficult to steer the vehicle in a straight line, one of the tires and/or wheels may be damaged. Drive slowly to the nearest authorized SUBARU dealer and have the vehicle inspected.

■ Tire pressures and wear

Maintaining the correct tire pressures helps to maximize the tires' service lives and is essential for good running performance. Check and, if necessary, adjust the pressure of each tire (including the spare - if equipped) at least once a month (for example, during a fuel stop) and before any long journey.

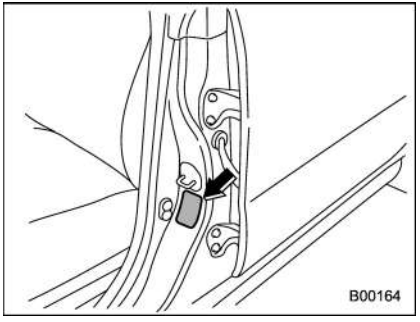

Tire placard

Check the tire pressures when the tires are cold. Use a pressure gauge to adjust the tire pressures to the values shown on the tire placard. The tire placard is located on the door pillar on the driver's side.

Driving even a short distance warms up the tires and increases the tire pressures. Also, the tire pressures are affected by the outside temperature. It is best to check tire pressure outdoors before driving the vehicle.

When a tire becomes warm, the air inside it expands, causing the tire pressure to increase. Be careful not to mistakenly release air from a warm tire to reduce its pressure.

NOTE

● The air pressure in a tire increases by approximately 4.3 psi (30 kPa, 0.3 kgf/cm^2) when the tire becomes warm.

● The tires are considered cold when the vehicle has been parked for at least three hours or has been driven less than one mile (1.6 km).

⚠ WARNING

Do not let air out of warm tires to adjust pressure. Doing so will result in low tire pressure.

Incorrect tire pressures detract from controllability and ride comfort, and they cause the tires to wear abnormally.

– CONTINUED –

- **Correct tire pressure** (tread worn evenly)

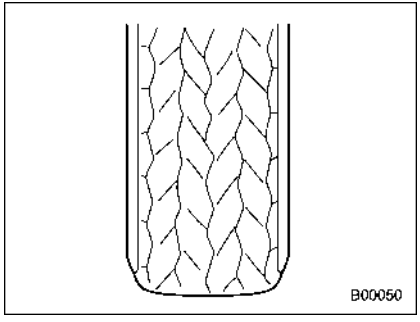

Roadholding is good, and steering is responsive. Rolling resistance is low, so fuel consumption is also lower.

- **Abnormally low tire pressure** (tread worn at shoulders)

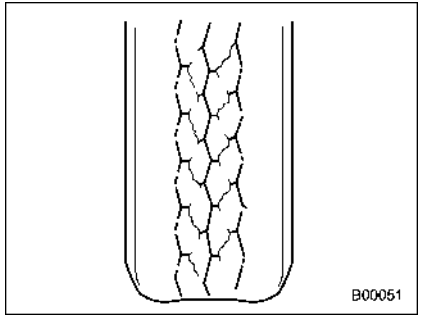

Rolling resistance is high, so fuel consumption is also higher.

- **Abnormally high tire pressure** (tread worn in center)

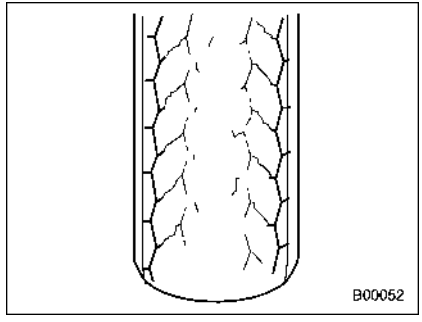

Ride comfort is poor. Also, the tire magnifies the effects of road-surface bumps and dips, possibly resulting in vehicle damage.

If the tire placard shows tire pressures for the vehicle when fully loaded, adjust the tire pressures to the values that match current loading conditions.

WARNING

Driving at high speeds with excessively low tire pressures can cause the tires to deform severely and to rapidly become hot. A sharp increase in temperature could cause tread separation, and destruction of

the tires. The resulting loss of vehicle control could lead to an accident.

■ Wheel balance

Each wheel was correctly balanced when your vehicle was new, but the wheels will become unbalanced as the tires become worn during use. Wheel imbalance causes the steering wheel to vibrate slightly at certain vehicle speeds and detracts from the vehicle's straight-line stability. It can also cause steering and suspension system problems and abnormal tire wear. If you suspect that the wheels are not correctly balanced, have them checked and adjusted by your SUBARU dealer. Also have them adjusted after tire repairs and after tire rotation.

⚠ CAUTION

Loss of correct wheel alignment causes the tires to wear on one side and reduces the vehicle's running stability. Contact your SUBARU dealer if you notice abnormal tire wear.

NOTE

The suspension system is designed to hold each wheel at a certain alignment (relative to the other wheels and to the road) for optimum straight-line stability and cornering performance.

■ Wear indicators

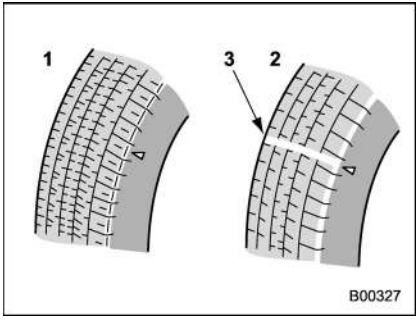

1) New tread
2) Worn tread
3) Tread wear indicator

Each tire incorporates a tread wear indicator, which becomes visible when the depth of the tread grooves decreases to 0.063 in (1.6 mm). A tire must be replaced when the tread wear indicator appears as a solid band across the tread.

⚠ WARNING

When a tire's tread wear indicator becomes visible, the tire is worn beyond the acceptable limit and must be replaced immediately. With a tire in this condition, driving at high speeds in wet weather can cause the vehicle to hydroplane. The resulting loss of vehicle control can lead to an accident.

NOTE

For safety, inspect tire tread regularly and replace the tires before their tread wear indicators become visible.

– CONTINUED –

■ Tire rotation direction mark

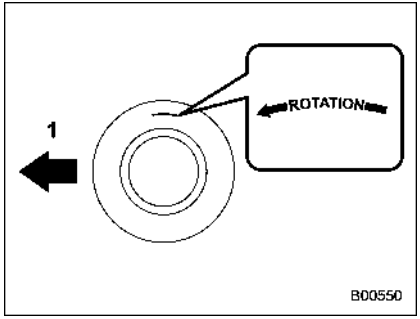

Example of tire rotation direction mark
1) Front

If the tire has the rotation direction specification, the tire rotation direction mark is placed on its sidewall.

When you install a tire that has the tire rotation direction mark, install the tire with the direction mark facing forward.

■ Tire rotation

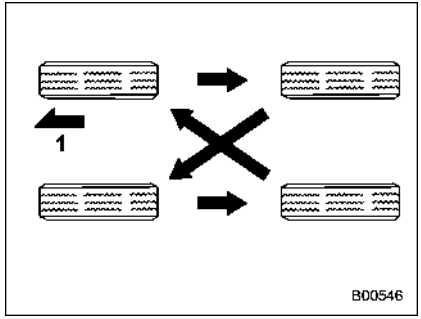

Vehicles equipped with 4 non-unidirectional tires
1) Front

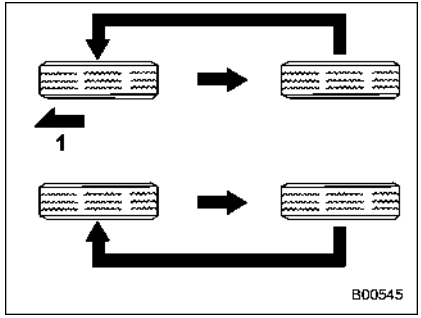

Vehicles equipped with unidirectional tires
1) Front

Tire wear varies from wheel to wheel. Move the tires to the positions shown in the illustration each time they are rotated. For the tire rotation schedule, refer to the “Warranty and Maintenance Booklet”.

Replace any damaged or unevenly worn tires at the time of rotation. After tire rotation, adjust the tires pressures and make sure the wheel nuts are correctly tightened.

After driving approximately 600 miles (1,000 km), check the wheel nuts again and retighten any nut that has become loose.

■ Tire replacement

The wheels and tires are important and integral parts of your vehicle’s design; they cannot be changed arbitrarily. The tires fitted as standard equipment are optimally matched to the characteristics of the vehicle and were selected to give the best possible combination of running performance, ride comfort, and service life. It is essential for every tire to have a size and construction matching those shown on the tire placard and to have a speed symbol and load index matching those shown on the tire placard.

Using tires of a non-specified size detracts

from controllability, ride comfort, braking performance, speedometer accuracy and odometer accuracy. It also creates incorrect body-to-tire clearances and inappropriately changes the vehicle's ground clearance.

All four tires must be the same in terms of manufacturer, brand (tread pattern), construction, and size. You are advised to replace the tires with new ones that are identical to those fitted as standard equipment.

For safe vehicle operation, SUBARU recommends replacing all four tires at the same time.

WARNING

- **When replacing or installing tire (s), all four tires must be the same for following items.**
  (a) Size
  (b) Circumference
  (c) Speed symbol
  (d) Load index
  (e) Construction
  (f) Manufacturer
  (g) Brand (tread pattern)
  (h) Degrees of wear
  For the items (a) to (d), you must obey the specification that is printed on the tire placard. The tire placard is located on the driver's door pillar.
  If all of four tires are not the same for items (a) to (h), serious mechanical damage could occur to the drive train of your car, and affect the following.
  — Ride
  — Handling
  — Braking
  — Speedometer/Odometer calibration
  — Clearance between the body and tires
  It also may be dangerous and lead to loss of vehicle control, and it can lead to an accident.
- **Use only radial tires. Do not use radial tires together with belted bias tires and/or bias-ply tires. Doing so can dangerously reduce controllability, resulting in an accident.**

■ Wheel replacement

When replacing wheels due, for example, to damage, make sure the replacement wheels match the specifications of the wheels that are fitted as standard equipment. Replacement wheels are available from SUBARU dealers.

WARNING

Use only those wheels that are specified for your vehicle. Wheels not meeting specifications could interfere with brake caliper operation and may cause the tires to rub against the wheel well housing during turns. The resulting loss of vehicle control could lead to an accident.

NOTE

When any of the wheels are removed and replaced for tire rotation or for any other reason, always check the tightness of the wheel nuts after driving approximately 600 miles (1,000 km). If any nut is loose, tighten it to the specified torque.

Aluminum wheels

Aluminum wheels can be scratched and damaged easily. Handle them carefully to maintain their appearance, performance, and safety.

- When any of the wheels are removed and replaced for tire rotation or to change a flat tire, always check the tightness of the wheel nuts after driving approximately 600 miles (1,000 km). If any nut is loose, tighten it to the specified torque.
- Never apply oil to the threaded parts, wheel nuts, or tapered surface of the wheel.
- Never let the wheel rub against sharp protrusions or curbs.
- When wheel nuts, balance weights, or the center cap is replaced, be sure to replace them with genuine SUBARU parts designed for aluminum wheels.

Windshield washer fluid

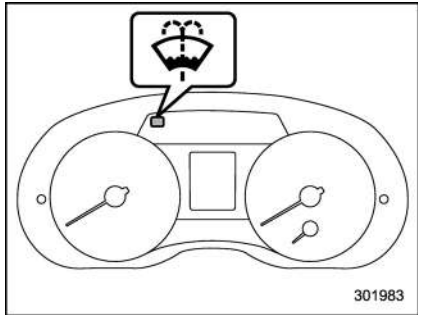

Windshield washer fluid warning light (type A)

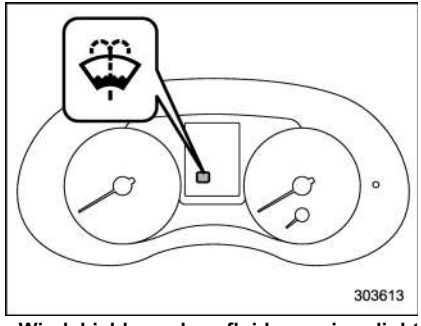

Windshield washer fluid warning light (type B)

When there is only a small amount of washer fluid remaining, the windshield washer fluid warning light will illuminate. When this occurs, refill the washer fluid.

■ Adding the windshield washer fluid

CAUTION

Never use engine coolant as washer fluid because it could cause paint damage.

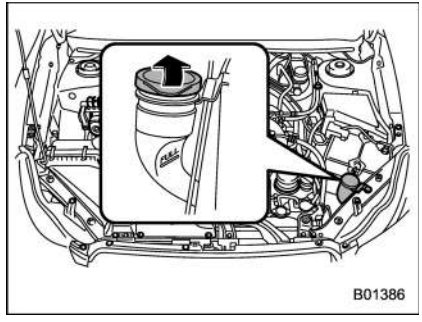

Remove the washer tank filler cap, then add windshield washer fluid until it reaches the “FULL” mark on the tank.

■ Windshield washer fluid

Use windshield washer fluid. If windshield washer fluid is unavailable use clean water.

In areas where water freezes in winter, use an anti-freeze type windshield washer fluid. SUBARU Windshield Washer Fluid contains 58.5% methyl alcohol and 41.5% surfactant, by volume. Its freezing temperature varies according to how much it is diluted, as indicated in the following table.

Washer Fluid Concentration	Freezing Temperature
30%	**10.4°F (−12°C)**
50%	**−4°F (−20°C)**
100%	**−49°F (−45°C)**

In order to prevent freezing of washer fluid, check the freezing temperatures in the table above when adjusting the fluid concentration to the outside temperature.

If you fill the reservoir tank with a fluid with a different concentration from the one used previously, purge the old fluid from the piping between the reservoir tank and washer nozzles by operating the washer for a certain period of time. Otherwise, if the concentration of the fluid remaining in the piping is too low for the outside temperature, it may freeze and block the nozzles.

⚠ CAUTION

- **Adjust the washer fluid concentration appropriately for the outside temperature. If the concentration is inappropriate, sprayed washer fluid may freeze on the windshield and obstruct your view, and the fluid may freeze in the reservoir tank.**
- **State or local regulations on volatile organic compounds may restrict the use of methanol, a common windshield washer anti-freeze additive. Washer fluids containing non-methanol anti-freeze agents should be used only if they provide cold weather protection without damaging your vehicle's paint, wiper blades or washer system.**

Replacement of wiper blades

Grease, wax, insects, or other material on the windshield or the wiper blade results in jerky wiper operation and streaking on the glass. If you cannot remove the streaks after operating the windshield washer or if the wiper operation is jerky, clean the outer surface of the windshield (or rear window) and the wiper blades using a sponge or soft cloth with a neutral detergent or mild-abrasive cleaner. After cleaning, rinse the windshield and wiper blades with clean water. The windshield is clean if beads do not form when you rinse the windshield with water.

⚠ CAUTION

- **Do not clean the wiper blades with gasoline or a solvent, such as paint thinner or benzine. This will cause deterioration of the wiper blades.**
- **While removing the wiper blades from the wiper arms, do not return the wiper arms to the original positions. Otherwise, the windshield surface may be scratched.**
- **When returning the raised wiper arms to the original positions,**

– CONTINUED –

carefully return the wiper arms on the windshield by hand. You should not return the wiper arms to the windshield only by the return spring. Otherwise, the wiper arms may be deformed and/or the windshield surface may be scratched.

If you cannot eliminate the streaking even after following this method, replace the wiper blades using the following procedures.

■ Windshield wiper blade assembly

1. Raise the wiper arm off the windshield.

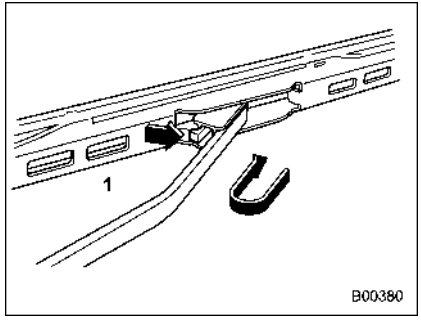

1) Stopper

2. Remove the wiper blade assembly by holding its pivot area and pushing it in the direction shown by the arrow while depressing the wiper blade stopper.
3. Install the wiper blade assembly to the wiper arm. Make sure that it locks in place.
4. Hold the wiper arm by hand and slowly lower it in position.

■ Windshield wiper blade rubber

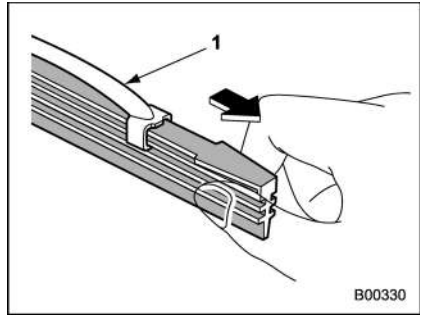

1) Metal support

1. Grasp the locked end of the blade rubber assembly and pull it firmly until the stoppers on the rubber are free of the metal support.

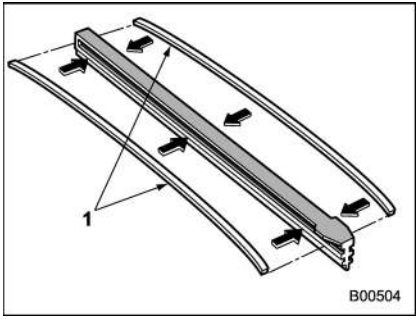

1) Metal spines

2. If the new blade rubber is not provided with two metal spines, remove the metal spines from the old blade rubber and install them in the new blade rubber.

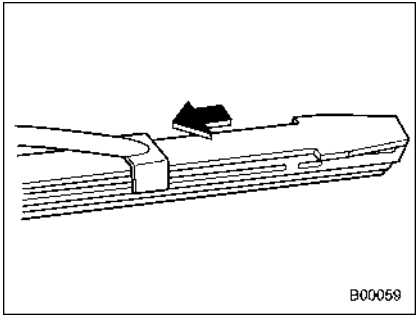

3. Align the claws of the metal support with the grooves in the rubber and slide the blade rubber assembly into the metal support until it locks.

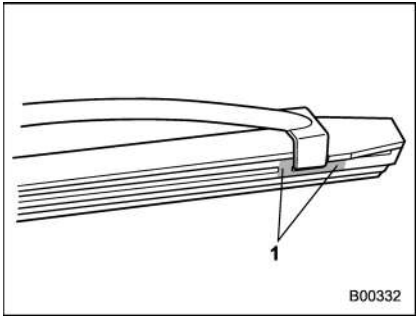

1) Stopper

4. Be sure to position the claws at the end of the metal support between the stoppers on the rubber as shown. If the rubber is not retained properly, the wiper blade may scratch the windshield.

■ Rear window wiper blade assembly

1. Raise the wiper arm off the rear window.

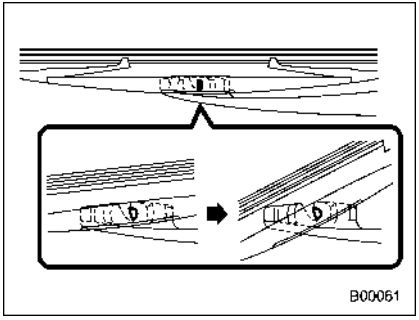

2. Turn the wiper blade assembly counterclockwise.

– CONTINUED –

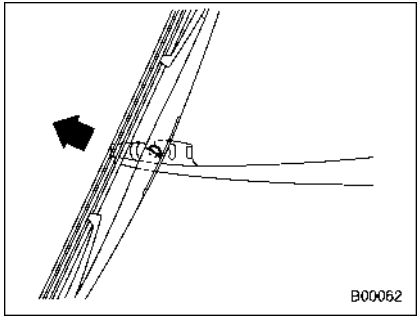

3. Pull the wiper blade assembly toward you to remove it from the wiper arm.
4. Install the wiper blade assembly to the wiper arm. Make sure that it locks in place.
5. Hold the wiper arm by hand and slowly lower it in position.

■ Rear window wiper blade rubber

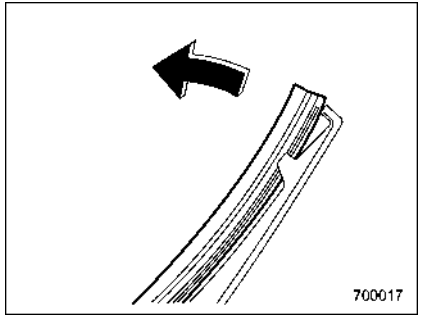

1. Pull out the end of the blade rubber assembly to unlock it from the plastic support.

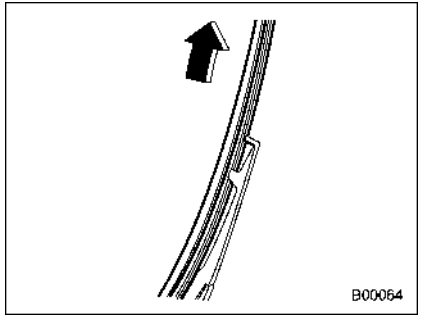

2. Pull the blade rubber assembly out of the plastic support.

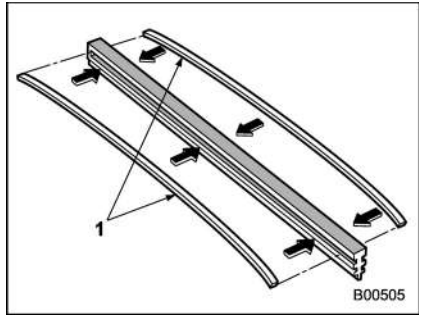

1) Metal spines

3. If the new blade rubber is not provided with two metal spines, remove the metal spines from the old blade rubber and install them in the new blade rubber.

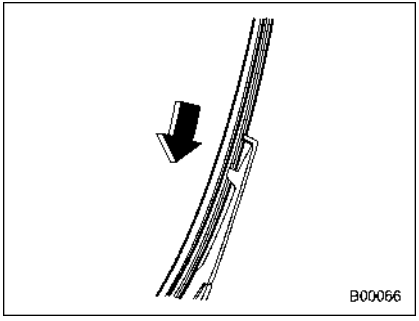

4. Align the claws of the plastic support with the grooves in the blade rubber assembly, then slide the blade rubber assembly into place.

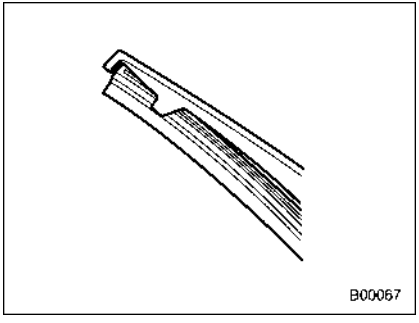

Securely retain both ends of the rubber with the stoppers on the plastic support ends. If the rubber is not retained properly, the wiper may scratch the rear window glass.

5. Install the wiper blade assembly to the wiper arm. Make sure that it locks in place.
6. Hold the wiper arm by hand and slowly lower it in position.

Battery

WARNING

- **Before beginning work on or near any battery, be sure to extinguish all cigarettes, matches, and lighters. Never expose a battery to an open flame or electric sparks. Batteries give off a gas which is highly flammable and explosive.**
- **For safety, in case an explosion does occur, wear eye protection or shield your eyes when working near any battery. Never lean over a battery.**
- **Do not let battery fluid contact eyes, skin, fabrics, or paint because battery fluid is a corrosive acid. If battery fluid gets on your skin or in your eyes, immediately flush the area with water thoroughly. Seek medical help immediately if acid has entered the eyes.**

  If battery fluid is accidentally swallowed, immediately drink a large amount of milk or water, and seek medical attention immediately.
- **To lessen the risk of sparks,**

– CONTINUED –

remove rings, metal watchbands, and other metal jewelry. Never allow metal tools to contact the positive battery terminal and anything connected to it WHILE you are at the same time in contact with any other metallic portion of the vehicle because a short circuit will result.

- **Keep everyone including children away from the battery.**
- **Charge the battery in a well-ventilated area.**
- **Battery posts, terminals and related accessories contain lead and lead compounds, chemicals known to the State of California to cause cancer and reproductive harm. Batteries also contain other chemicals known to the State of California to cause cancer. *Wash hands after handling*.**

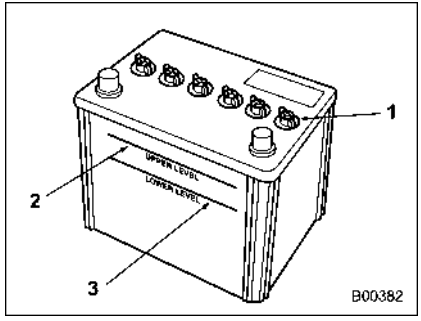

1) Cap
2) Upper level
3) Lower level

It is unnecessary to periodically check the battery fluid level or periodically refill with distilled water.

However, if the battery fluid level is below the lower level, remove the cap. Fill to the upper level with distilled water.

CAUTION

Never use more than 10 amperes when charging the battery because it will shorten battery life.

Fuses

CAUTION

Never replace a fuse with one having a higher rating or with material other than a fuse because serious damage or a fire could result.

The fuses are designed to melt during an overload to prevent damage to the wiring harness and electrical equipment. The fuses are located in two fuse boxes.

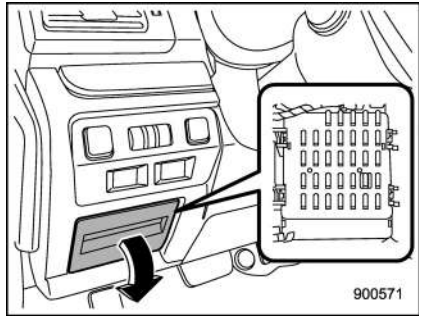

One is located under the instrument panel behind the fuse box cover on the driver's seat side. To remove the cover, pull it out.

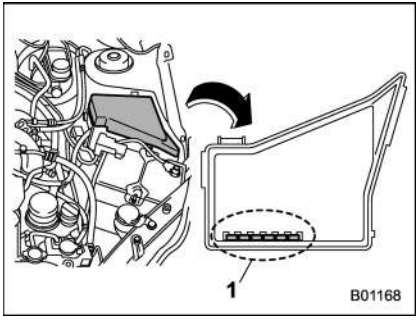

1) Spare fuses

The other one (main fuse box) is housed in the engine compartment. Also, the spare fuses are stored in the fuse box cover.

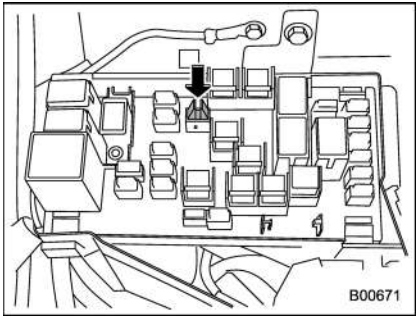

The fuse puller is stored in the main fuse box in the engine compartment.

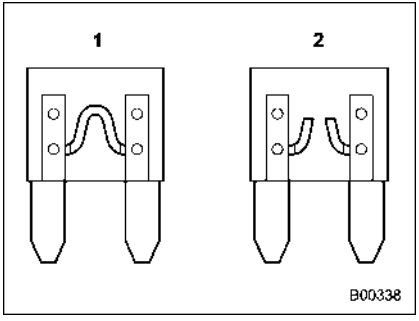

1) Good
2) Blown

If any lights, accessories or other electrical controls do not operate, inspect the corresponding fuse. If a fuse has blown, replace it.

1. Turn the ignition switch to the “LOCK”/ “OFF” position and turn off all electrical accessories.
2. Remove the cover.
3. Determine which fuse may be blown. Look at the back side of each fuse box cover and refer to “Fuses and circuits” ☞12-9.

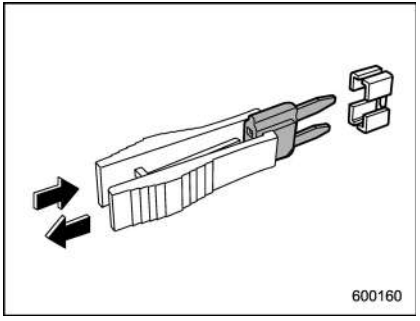

4. Pull out the fuse with the fuse puller.
5. Inspect the fuse. If it has blown, replace it with a spare fuse of the same rating.
6. If the same fuse blows again, this indicates that its system has a problem. Contact your SUBARU dealer for repairs.

Installation of accessories

Always consult your SUBARU dealer before installing fog lights or any other electrical equipment in your vehicle. Such accessories may cause the electronic system to malfunction if they are incorrectly installed or if they are not suited for the vehicle.

Replacing bulbs

WARNING

Bulbs may become very hot while illuminated. Before replacing bulbs, turn off the lights and wait until the bulbs cool down. Otherwise, there is a risk of sustaining a burn injury.

CAUTION

- **Replace any bulb only with a new bulb of the specified wattage. Using a bulb of different wattage could result in a fire. For the specified wattage of each bulb, refer to "Bulb chart" ☞12-13.**
- **Do not touch the glass portion of the light bulb with bare hands. When holding the glass portion is unavoidable, hold it using a clean dry cloth to avoid getting moisture and oils on the bulb. Also, if the bulb is scratched or dropped, it may blow out or crack.**

■ Headlights (models with HID headlights)

WARNING

High-intensity-discharge (HID) bulbs are used for the low beams of the headlights. These HID bulbs use an extremely high voltage. To avoid the risk of an electric shock that could result in serious injury, observe the following precautions.

- **Do not replace any headlight bulbs (both low beam and high beam) by yourself.**
- **Do not remove/restore the headlight assemblies by yourself.**
- **Do not remove any headlight-assembly components by yourself.**

For replacement, contact your SUBARU dealer.

■ Headlights (models without HID headlights)

⚠ CAUTION

Halogen headlight bulbs become very hot while in use. If you touch the bulb surface with bare hands or greasy gloves, fingerprints or grease on the bulb surface will develop into hot spots, causing the bulb to break. If there are finger prints or grease on the bulb surface, wipe them away with a soft cloth moistened with alcohol.

NOTE

- **If headlight aiming is required, consult your SUBARU dealer for proper adjustment of the headlight aim.**
- **It may be difficult to replace the bulbs. Have the bulbs replaced by your SUBARU dealer if necessary.**

Perform the following steps to replace the bulbs.

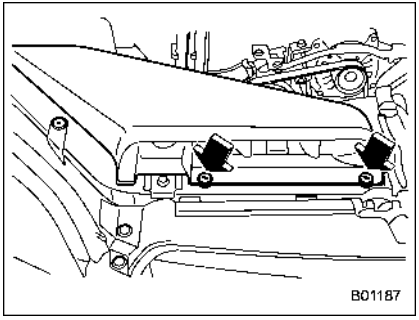

Right-hand side

1. Use a screwdriver to undo the clips on the air intake duct, then remove the air intake duct (right-hand side).

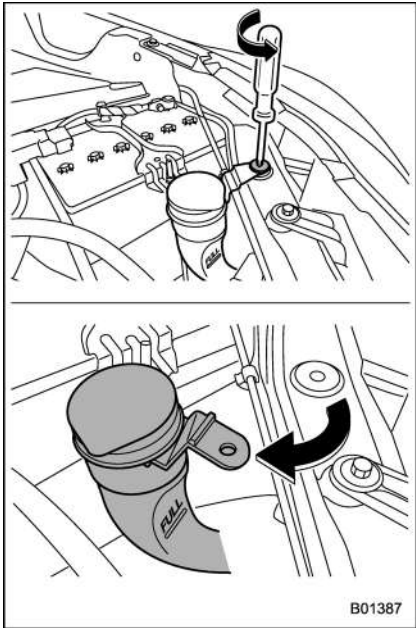

Left-hand side

2. Use a screwdriver to remove the secured clip of the washer tank. To make it easy to access the bulb, turn the neck of the washer fluid filler pipe as illustrated (left-hand side).

– CONTINUED –

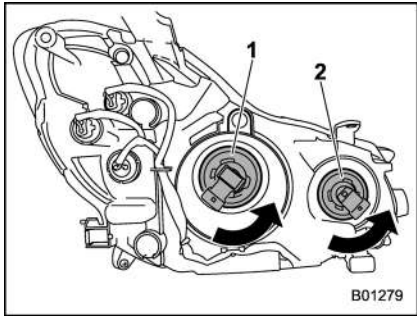

1) Low beam bulb
2) High beam bulb

3. Disconnect the electrical connector from the bulb and remove the bulb from the headlight assembly by turning it counterclockwise.
4. Replace the bulb with new one. At this time, use care not to touch the bulb surface.
5. To install the bulb to the headlight assembly, turn it clockwise until it clicks.
6. Reconnect the electrical connector.
7. Install the air intake duct with clips (right-hand side).
8. Set the washer fluid filler pipe to the original place and secure it by clip (left-hand side).

■ Front turn signal light

It may be difficult to replace the bulbs. Have the bulbs replaced by your SUBARU dealer if necessary.

■ Parking light

It may be difficult to replace the bulbs. Have the bulbs replaced by your SUBARU dealer if necessary.

■ Front fog light

It may be difficult to replace the bulbs. Have the bulbs replaced by your SUBARU dealer if necessary.

■ Rear combination lights

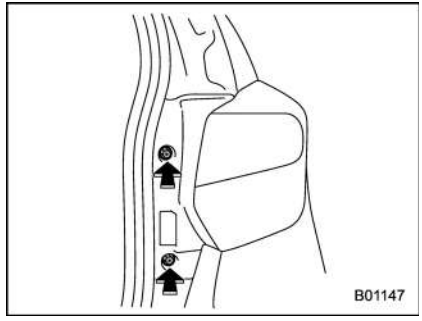

1. Using a Phillips screwdriver, remove the upper and lower screws that secure the rear combination light assembly.

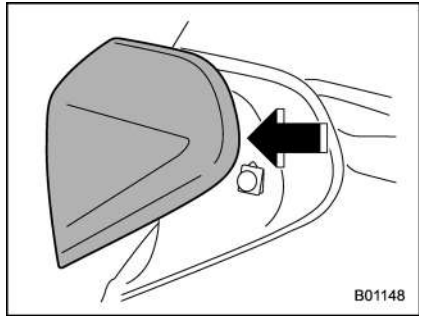

2. Slide the rear combination light as-

sembly rearward and remove it from the vehicle.

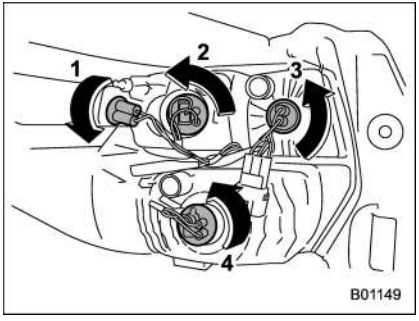

1) Rear side marker light
2) Rear turn signal light
3) Backup light
4) Stop light/Tail light

3. Remove the bulb socket from the rear combination light assembly by turning it counterclockwise.
4. Pull the bulb out of the bulb socket and replace it with a new one.
5. Set the bulb socket into the rear combination light assembly and turn it clockwise until it locks.

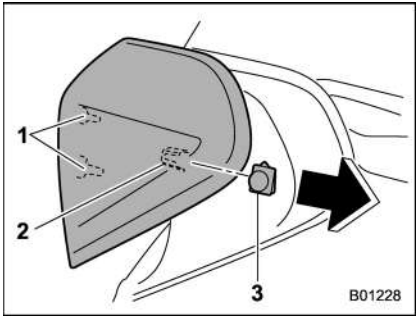

1) Guide pins
2) Catch
3) Clip

6. Put the rear combination light assembly into place while aligning the 2 guide pins and a catch with the guide holes and a clip on the vehicle.

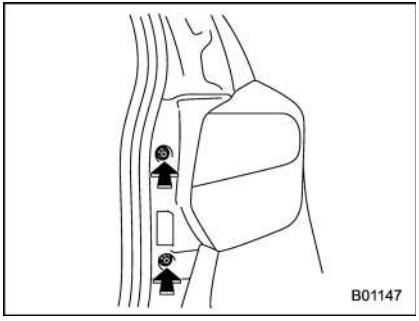

7. Tighten the upper and lower screws.

– CONTINUED –

■ License plate light

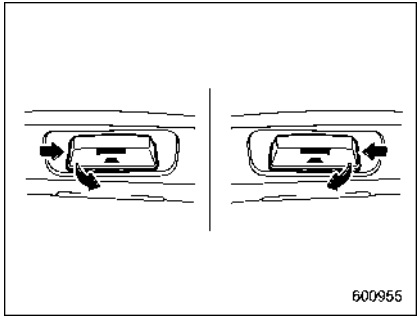

1. The license plate light must be pushed inwards, then pulled out to be removed.

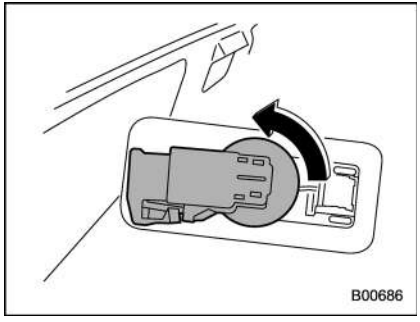

2. Turn the bulb socket counterclockwise and pull out the socket.
3. Pull the bulb out of the socket.
4. Install a new bulb.
5. Reinstall the bulb socket and the license plate light cover.

■ Map light

▼ Type A

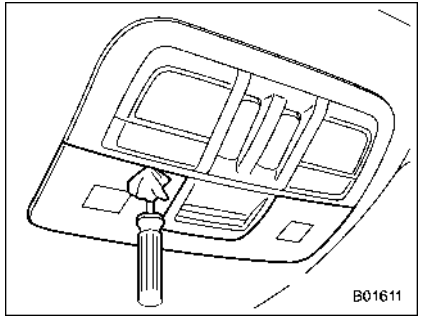

1. Remove the lens by prying the edge of the lens with a flat-head screwdriver.

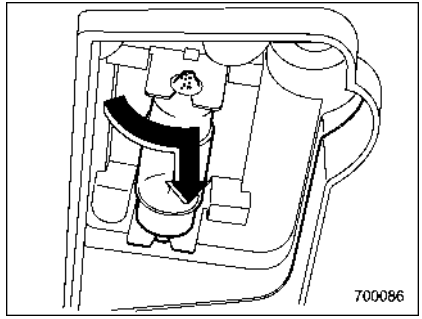

2. Turn the bulb until the flat surfaces at its ends are aligned vertically. Pull the bulb straight downward to remove it.
3. Install a new bulb.
4. Reinstall the lens.

▼ **Type B**

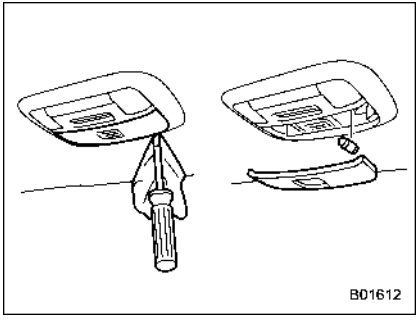

1. Remove the lens by prying the edge of the lens with a flat-head screwdriver.
2. Pull the bulb out of the socket.
3. Install a new bulb.
4. Reinstall the lens.

■ Dome light and cargo area light

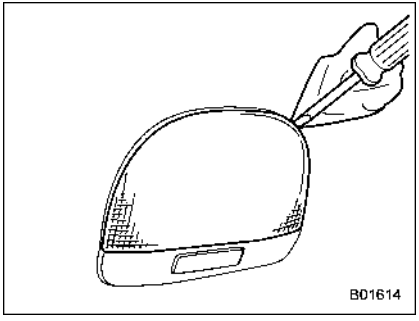

Dome light

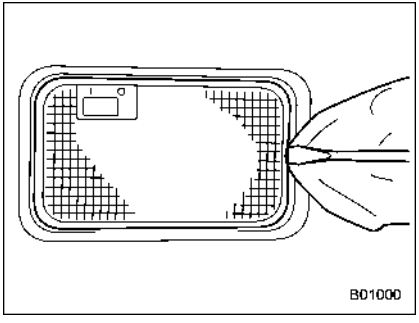

Cargo area light

1. Remove the lens by prying the edge of the lens with a flat-head screwdriver.
2. Pull the bulb out of the socket.
3. Install a new bulb.
4. Reinstall the lens.

■ Other bulbs

It may be difficult to replace the bulbs. Have the bulbs replaced by your SUBARU dealer if necessary.

Replacing key battery

The access key / transmitter battery may be discharged under the following conditions.

- The operation of the keyless access function is unstable
- The operating distance of the remote keyless entry system is unstable
- The transmitter does not operate properly when used within the standard distance

Replace the battery with a new one.

■ Safety precautions

CAUTION

- **Do not let dust, oil or water get on or in the access key/transmitter when replacing battery.**
- **Be careful not to touch or damage the printed circuit board in the access key/transmitter when replacing the battery.**
- **Be careful not to allow children to touch the battery and any removed parts; children could swallow them.**
- **There is a danger of an explosion if the battery is incorrectly replaced. Replace only with the same or equivalent type of the battery.**
- **Batteries should not be exposed to excessive heat such as bright sunlight, fire or the like.**

NOTE

- **Replace only with the same or equivalent type of battery recommended by the manufacturer.**
- **Dispose of used batteries according to local laws.**
- **Mount the battery in the correct orientation to prevent fluid leakage. Be careful not to bend the terminals. It may result in a malfunction.**
- **It is recommended that the battery be replaced by a SUBARU dealer.**
- **Use a new battery.**
- **After replacing the battery, confirm that the transmitter functions properly.**

■ Replacing battery of access key

CAUTION

When removing or reinstalling the access key cover, make sure that the plastic part does not come off or become misaligned.

Battery: Button battery CR2032

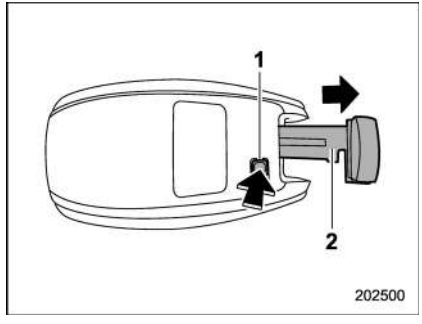

1) Release button
2) Mechanical key

1. Take out the mechanical key.

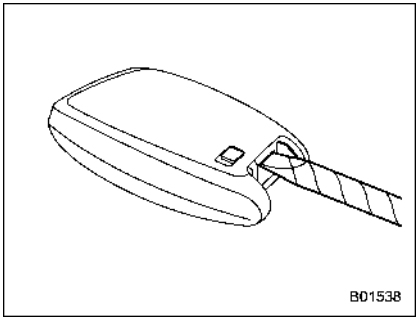

2. Wrap a flat-head screwdriver with vinyl tape or a cloth, and insert it in the gap to remove the cover.

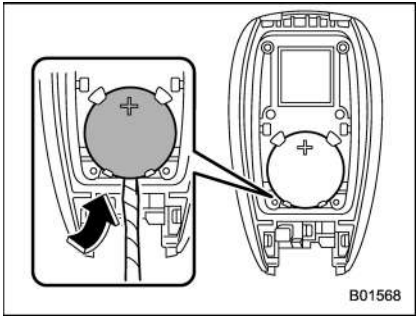

3. Take out the battery using a flat-head screwdriver with vinyl tape or a cloth.

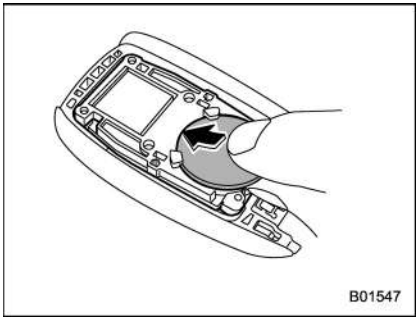

4. Insert a new battery with its positive (+) side facing upward as shown in the figure.

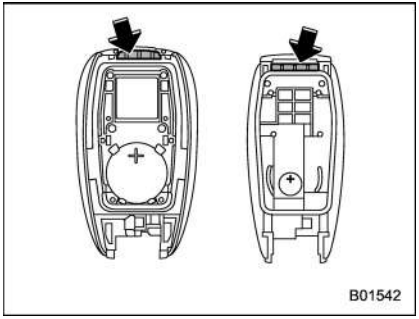

5. Attach the cover to the access key by fitting the projections and recesses together.

■ Replacing transmitter battery

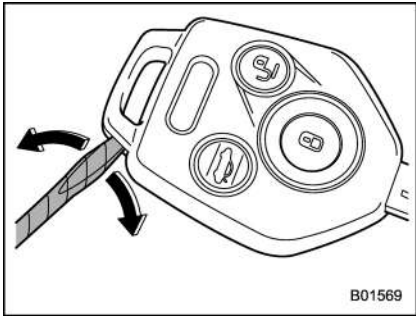

1. Open the key head using a flat-head screwdriver.

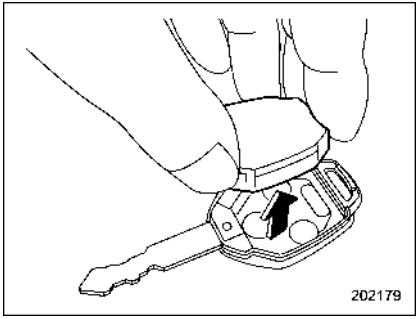

2. Remove the transmitter case from the key head.

– CONTINUED –

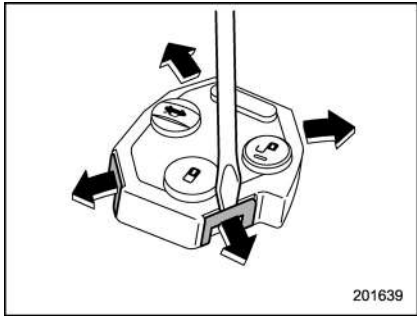

3. Open the transmitter case by releasing the hooks.

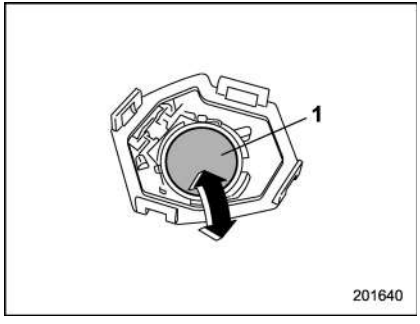

1) Negative (−) side facing up

4. Replace the old battery with a new battery (type **CR1620** or equivalent) making sure to install the new battery with the negative (−) side facing up.
5. Put together the transmitter case by fitting the hooks on the case.
6. Reinstall the transmitter case in the key head.
7. Refit the removed half of the key head.

After the battery is replaced, the transmitter must be synchronized with the remote keyless entry system's control unit. Press either the "🔒" or "🔓" button six times to synchronize the unit.

Specifications 12-2
Dimensions 12-2
Engine 12-3
Fuel 12-3
Engine oil 12-4
Manual transmission, front differential and rear differential gear oil 12-6
Fluids 12-7
Engine coolant 12-7
Electrical system 12-7
Tires 12-8
Brake disc 12-8
Fuses and circuits 12-9
Fuse panel located in the passenger compartment 12-9
Fuse panel located in the engine compartment 12-11
Bulb chart 12-13
Safety precautions 12-13
Bulb chart 12-14
Vehicle identification 12-16

Specifications

These specifications are subject to change without notice.

■ Dimensions

in (mm)

Item		Crosstrek models
Overall length		175.2 (4,450)
Overall width		70.1 (1,780)
Overall height		63.6 (1,615)
Wheel base		103.7 (2,635)
Tread	Front	60.0 (1,525)
	Rear	60.0 (1,525)
Ground clearance*		8.7 (220)

*: Measured with vehicle empty

■ Engine

Engine model	FB20 (2.0 L, DOHC, non-turbo)
Engine type	Horizontally opposed, liquid cooled 4 cylinder, 4-stroke gasoline engine
Displacement cu-in (cc)	121.7 (1,995)
Bore × Stroke in (mm)	3.31 × 3.54 (84.0 × 90.0)
Compression ratio	10.5 : 1
Firing order	1 – 3 – 2 – 4

■ Fuel

Fuel requirement	Fuel tank capacity
Unleaded gasoline with 87 AKI (90 RON) or higher	15.9 US gal (60 liters, 13.2 Imp gal)

For more details, refer to “Fuel” ☞7-3.

– CONTINUED –

■ Engine oil

For the checking, adding and replacing procedure or other details, refer to “Engine oil” ☞11-8.

NOTE

The procedure for changing the engine oil and oil filter should be performed by a properly-trained expert. It is recommended that you have this service performed by your SUBARU dealer.

▼ Approved engine oil

Always use the SUBARU approved engine oil. For further details, please contact your SUBARU dealer.
If the approved engine oil is unavailable, use the alternative engine oil described on the next page.

▼ Alternative engine oil

If the SUBARU approved oil is unavailable, the following alternative oil can be used.

NOTE

Each quantity indicated here is only a guideline. The necessary quantity for replacement may differ slightly depending on the temperature and other factors.

Oil grade	SAE viscosity No. and applicable temperature	Engine oil capacity
API (American Petroleum Institute) classification **SN** with the words “RESOURCE CONSERVING” **or** ILSAC (International Lubricant Specification Advisory Committee) **GF-5**, which can be identified with the ILSAC certification mark (Starburst mark)	**0W-20 synthetic** oil is the required oil for optimum engine performance and protection. Conventional oil may be used if synthetic oil is unavailable. *: If 0W-20 synthetic oil is not available, 5W-30 or 5W-40 conventional oil may be used if replenishment is needed but should be changed to 0W-20 synthetic oil at the next oil change. °C -30 -20 -10 0 10 20 30 40 °F -20 0 20 40 60 80 100 0W-20* 5W-30, 5W-40 ZOM0333	– Adding the oil from low level to full level: 1.1 US qt (1.0 liter, 0.9 Imp qt) – Changing the oil and oil filter: 5.1 US qt (4.8 liters, 4.2 Imp qt)

– CONTINUED –

■ Manual transmission, front differential and rear differential gear oil

Oil	Manual transmission oil	Front differential gear oil (CVT models)	Rear differential gear oil
Oil grade	• SUBARU Extra MT*3 • API classification GL-5 (75W-90)*4	• SUBARU Extra MT*3 • API classification GL-5 (75W-90)	API classification GL-5
SAE viscosity No. and applicable temperature	—		• 75W-90* • 90 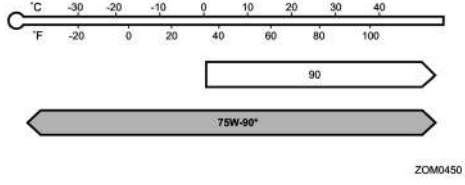 *: Recommended
Oil capacity*1	3.7 US qt (3.5 liters, 3.1 Imp qt)	1.3 US qt (1.2 liters, 1.1 Imp qt)	0.8 US qt (0.8 liters, 0.7 Imp qt)
Remarks*2	“Manual transmission oil” ☞11-14	“Front differential gear oil (CVT models) and rear differential gear oil” ☞11-15	“Front differential gear oil (CVT models) and rear differential gear oil” ☞11-15

*1: The indicated oil quantity is only a guideline. The necessary quantity for replacement may differ slightly depending on the temperature and other factors. After refilling the gearbox with oil, the oil level should be checked.
*2: For more details about maintenance and service, refer to the indicated section.
*3: The vehicle is filled at the factory with this type of oil.
*4: You may use this type of manual transmission oil. However, using this type of oil will detract from driveability and fuel efficiency.

■ Fluids

Fluid	Fluid type*1	Fluid capacity*2	Remarks*3
Continuously variable transmission fluid (CVT models)	Consult your SUBARU dealer.	12.6 US qt (11.9 liters, 10.5 Imp qt)	“Continuously variable transmission fluid” ☞11-15
Brake fluid	FMVSS No. 116, fresh DOT 3 or DOT 4 brake fluid	–	“Brake fluid” ☞11-15
Clutch fluid (MT models)	FMVSS No. 116, fresh DOT 3 or DOT 4 brake fluid	–	“Clutch fluid (MT models)” ☞11-16

*1: Use one of the indicated types of fluid.
*2: The indicated fluid quantity is only a guideline. The necessary quantity for replacement may differ slightly depending on the temperature and other factors.
*3: For more details about maintenance and service, refer to the indicated section.

■ Engine coolant

Vehicle model	Coolant capacity	Coolant type
MT models	8.5 US qt (8.0 liters, 7.0 Imp qt)	SUBARU Super Coolant
CVT models	8.9 US qt (8.4 liters, 7.4 Imp qt)	

The indicated coolant quantity is only a guideline. The necessary quantity for replacement may differ slightly depending on the temperature and other factors. For more details about maintenance and service, refer to “Cooling system” ☞11-10.

■ Electrical system

Battery type	Canada-spec. models	75D23L
	Other models	55D23L
Alternator	12V-130A	
Spark plugs	SILZKAR7B11 (NGK)	

– CONTINUED –

■ Tires

Model		U.S.-spec. models and Canada-spec. models		Other models
Tire size		P225/55R17 95H		225/55R17 97V
Wheel size		17 × 7J		17 × 7J
Pressure	Front	CVT models	33 psi (230 kPa, 2.3 kgf/cm^2)	32 psi (220 kPa, 2.2 kgf/cm^2)
		MT models	32 psi (220 kPa, 2.2 kgf/cm^2)	
	Rear	CVT models	32 psi (220 kPa, 2.2 kgf/cm^2)	30 psi (210 kPa, 2.1 kgf/cm^2)
		MT models	30 psi (210 kPa, 2.1 kgf/cm^2)	
Temporary spare tire	Size	T145/90 D16		185/65R17
	Pressure	60 psi (420 kPa, 4.2 kgf/cm^2)		42 psi (290 kPa, 3.0 kgf/cm^2)
Wheel nut tightening torque		89 lbf·ft (120 N·m, 12 kgf·m)*1		73.8 lbf·ft (100 N·m, 10.2 kgf·m)

*1: This torque is equivalent to applying approximately 88 to 110 lbf (40 to 50 kgf) at the end of the wheel nut wrench. If you have tightened the wheel nuts by yourself, have the tightening torque checked at the nearest automotive service facility as soon as possible. For the wheel nut tightening procedure, refer to “Changing a flat tire” ☞9-5.

■ Brake disc

If you need information on the usage limit value of brake discs and the method for measuring them, we recommend that you consult your SUBARU dealer.

Fuses and circuits

■ Fuse panel located in the passenger compartment

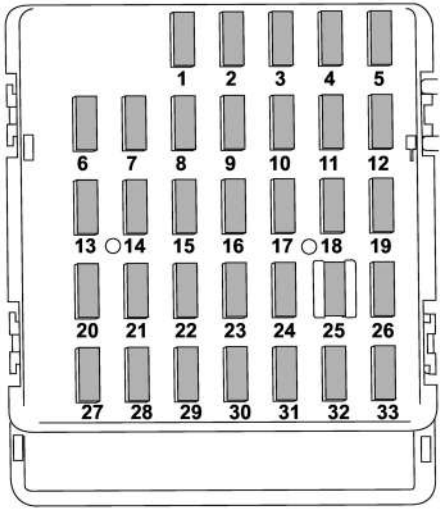

C00123

Fuse panel	Fuse rating	Circuit
1	20A	• Trailer hitch connector
2	15A	—
3	15A	• Door locking
4	10A	• Front wiper deicer relay
5	10A	• Combination meter • Clock
6	7.5A	• Remote control rear view mirrors • Seat heater relay
7	15A	• Combination meter • Integrated unit
8	10A	• Stop light
9	15A	• Front wiper deicer
10	7.5A	• Power supply (battery)
11	7.5A	• Turn signal unit
12	15A	• Transmission control unit • Engine control unit • Integrated unit
13	20A	• Accessory power outlet (center console) • AC110V (If installed)
14	15A	• Parking light • Tail light • Rear combination light

– CONTINUED –

Fuse panel	Fuse rating	Circuit
15	10A	• Luggage light • Clock
16	7.5A	• Illumination
17	15A	• Seat heaters
18	10A	• Backup light
19	7.5A	• Power window relay • Radiator main fan relay
20	10A	• Accessory power outlet (instrument panel)
21	10A	• Starter relay
22	7.5A	• Air conditioner • Rear window defogger relay coil
23	Empty	
24	10A	• Audio unit • Clock
25	15A	• SRS airbag system
26	Empty	
27	15A	• Blower fan
28	15A	• Blower fan
29	15A	• Fog light
30	Empty	
31	7.5A	• Auto air conditioner unit • Integrated unit

Fuse panel	Fuse rating	Circuit
32	7.5A	• Clutch switch • Steering lock control unit
33	7.5A	• Vehicle Dynamics Control unit

■ Fuse panel located in the engine compartment

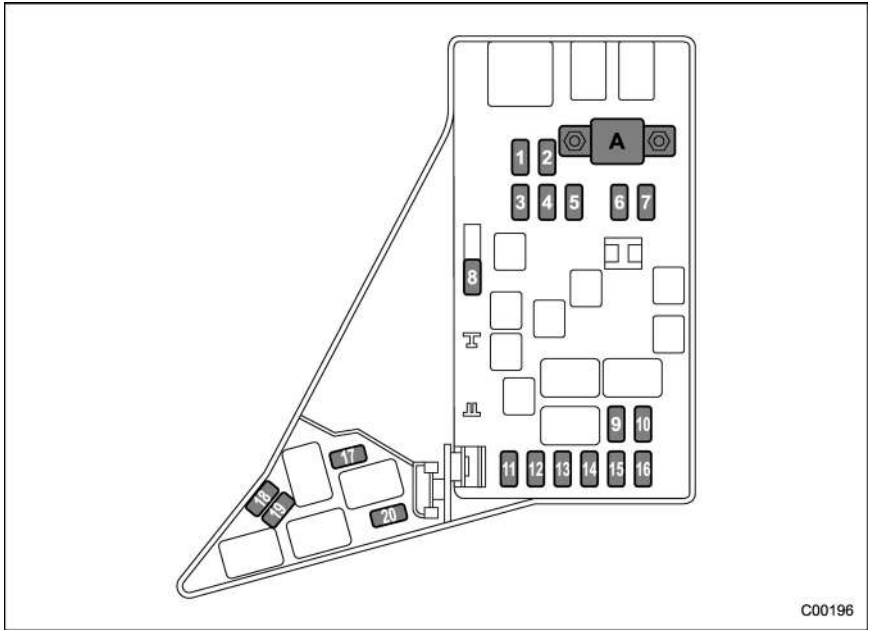

A) Main fuse

Fuse panel	Fuse rating	Circuit
1	30A	● ABS unit ● Vehicle Dynamics Control unit
2	25A	● Main fan (cooling fan)
3	25A	● Sub fan (cooling fan)
4	Empty	
5	Empty	
6	30A	● Headlight (low beam)
7	15A	● Headlight (high beam)
8	20A	● Back-up
9	15A	● Horn
10	25A	● Rear window defogger ● Mirror heater
11	15A	● Fuel pump
12	20A	● Continuously variable transmission control unit
13	7.5A	● Engine control unit
14	15A	● Turn and hazard warning flasher
15	15A	● Tail and illumination relay
16	7.5A	● Alternator

– CONTINUED –

Fuse panel	Fuse rating	Circuit
17	Empty	
18	10A	• Telematics
19	15A	• Headlight (low beam – right hand)
20	15A	• Headlight (low beam – left hand)

Bulb chart

■ Safety precautions

WARNING

- **Bulbs may become very hot while illuminated. Before replacing bulbs, turn off the lights and wait until the bulbs cool down. Otherwise, there is a risk of sustaining a burn injury.**
- **For models with HID low beam headlights, observe the following precautions. Not doing so carries the risk of an electric shock that could result in serious injury because the HID bulbs use an extremely high voltage.**
  - **Do not replace any headlight bulbs (both low beam and high beam) by yourself.**
  - **Do not remove/restore the headlight assemblies by yourself.**
  - **Do not remove any headlight-assembly components by yourself.**

For replacement, contact your SUBARU dealer.

CAUTION

Replace any bulb only with a new bulb of the specified wattage. Using a bulb of different wattage could result in a fire.

– CONTINUED –

■ Bulb chart

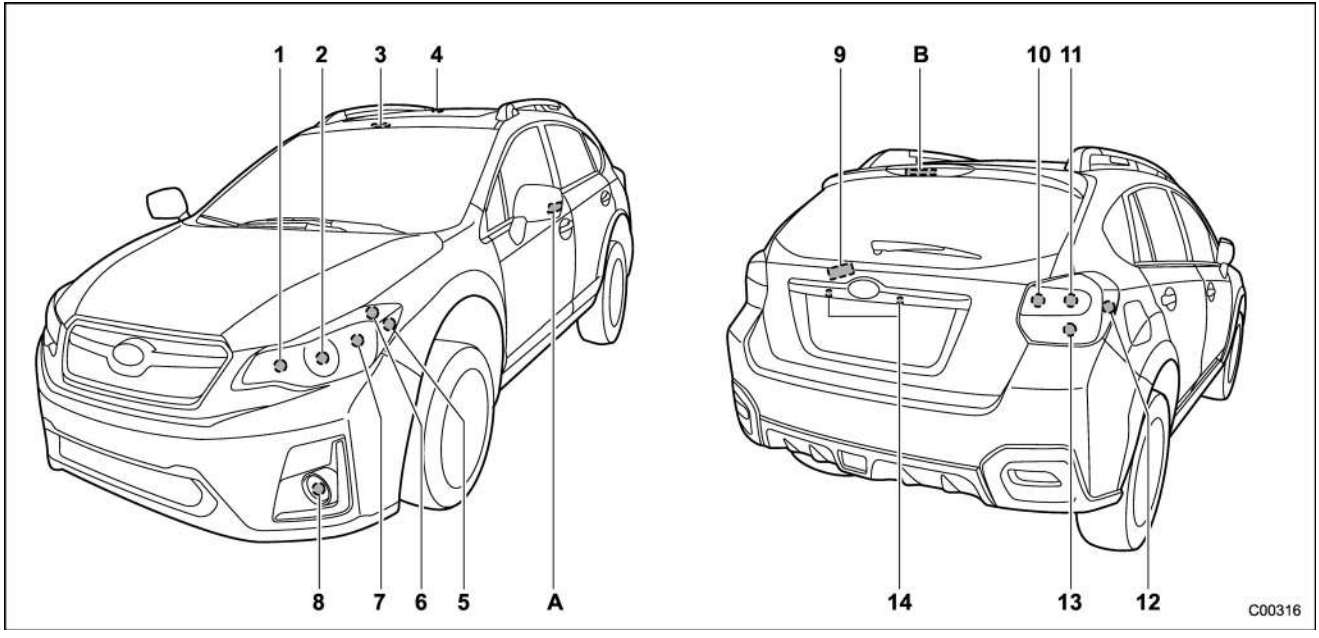

NOTE

Lights A and B are the LED (Light Emitting Diode) type. Consult your SUBARU dealer for replacement.

		Wattage	Bulb No.
1)	High beam headlight	12V-60W	HB3
2)	Low beam headlight		
	Models with HID light	12V-35W	D2R
	Models with halogen light	12V-55W	H11
3)	Map light	12V-8W	–
4)	Dome light	12V-8W	–
5)	Front side marker light	12V-5W	W5W
6)	Parking light	12V-5W	W5W
7)	Front turn signal light	12V-21W	WY21W
8)	Front fog light		
	Models without steering responsive fog lights system	12V-24W	PSX24W
	Models with steering responsive fog lights system	12V-55W	H11
9)	Cargo area light	12V-5W	–
10)	Backup light	12V-16W	W16W
11)	Rear turn signal light	12V-21W	WY21W
12)	Rear side marker light	12V-5W	W5W
13)	Stop light/Tail light	12V-21/5W	W21/5W
14)	License plate light	12V-5W	W5W
A)	Side turn signal light (if equipped)	–	–
B)	High-mounted stop light	–	–

Vehicle identification

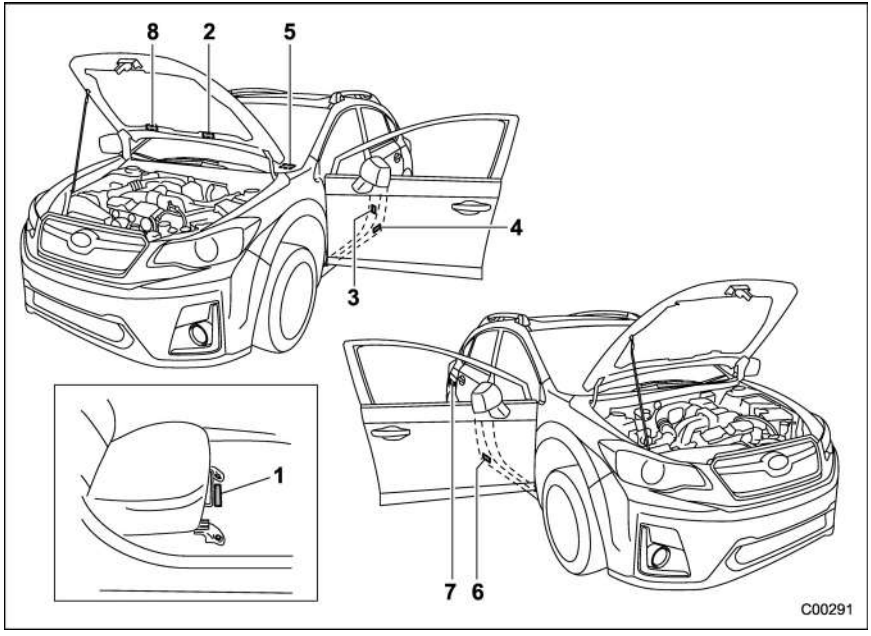

1) Vehicle identification number (under the floor carpet of the right-hand front seat)
2) Emission control label
3) Tire inflation pressure label
4) Certification label
5) Vehicle identification number plate
6) Model number label
7) Fuel label
8) Air conditioner label

For U.S.A. 13-2
Tire information 13-2
Tire labeling 13-2
Recommended tire inflation pressure..... 13-4
Glossary of tire terminology 13-5
Tire care – maintenance and safety practices..... 13-10
Vehicle load limit – how to determine..... 13-10
Determining compatibility of tire and vehicle load capacities 13-13
Adverse safety consequences of overloading on handling and stopping and on tires 13-14
Steps for Determining Correct Load Limit..... 13-14
Uniform tire quality grading standards 13-15
Treadwear 13-15
Traction AA, A, B, C..... 13-15
Temperature A, B, C..... 13-15
Reporting safety defects (U.S.A.) 13-16
Supplement 13-17
Declaration of conformity with FCC rules 13-17

For U.S.A.

The following information has been compiled according to Code of Federal Regulations “Title 49, Part 575”.

Tire information

■ Tire labeling

Many markings (e.g. Tire size, Tire Identification Number or TIN) are placed on the sidewall of a tire by tire manufacturers. These markings can provide you with useful information on the tire.

▼ Tire size

Your vehicle comes equipped with P-Metric tire size. It is important to understand the sizing system in selecting the proper tire for your vehicles. Here is a brief review of the tire sizing system with a breakdown of its individual elements.

▽ P Metric

With the P-Metric system, Section Width is measured in millimeters. To convert millimeters into inches, divide by 25.4. The Aspect Ratio (Section Height divided by Section Width) helps provide more dimensional information about the tire size.

Example:

P	205	/	55	R	16
(1)	(2)		(3)	(4)	(5)

(1) P = Certain tire type used on light duty vehicles such as passenger cars

(2) Section Width in millimeters

(3) Aspect Ratio (= section height ÷ section width).

(4) R = Radial Construction

(5) Rim diameter in inches

▽ Load and Speed Rating Descriptions

The load and speed rating descriptions will appear following the size designation.

They provide two important facts about the tire. First, the number designation is its load index. Second, the letter designation indicates the tire’s speed rating.

Example:

P 205 / 55 R 16 89 V

Size designation (6) (7)

(6) Load Index: A numerical code which specifies the maximum load a tire can carry at the speed indicated by its speed symbol, at maximum inflation pressure.

For example, “90” means 1,323 lbs (600 kg), “89” means 1,278 lbs (580 kg).

WARNING

Load indices apply only to the tire, not to the vehicle. Putting a load rated tire on any vehicle does not mean the vehicle can be loaded up to the tire’s rated load.

(7) Speed Rating: An alphabetical system describing a tire’s capability to travel at established and predetermined speeds.

For example, “V” means 149 mph (240 km/h)

WARNING

- **Speed ratings apply only to the tire, not to the vehicle. Putting a speed rated tire on any vehicle does not mean the vehicle can be operated at the tire’s rated speed.**
- **The speed rating is void if the tires are worn out, damaged, repaired, retreaded, or otherwise altered from their original condition. If tires are repaired, retreaded, or otherwise altered, they may not be suitable for original equipment tire designed loads and speeds.**

▼ Tire Identification Number (TIN)

Tire Identification Number (TIN) is marked on the intended outboard sidewall. The TIN is composed of four groups. Here is a brief review of the TIN with a breakdown of its individual elements.

DOT XX XX XXX XXXX

(1) (2) (3) (4)

(1) Manufacturer’s Identification Mark

(2) Tire Size

(3) Tire Type Code

(4) Date of Manufacture

The first two figures identify the week, starting with “01” to represent the first full week of the calendar year; the second two figures represent the year. For example, 0101 means the 1st week of 2001.

▼ Other markings

The following makings are also placed on the sidewall.

▽ Maximum permissible inflation pressure

The maximum cold inflation pressure to which this tire may be inflated. For example, “300 kPa (44 PSI) MAX. PRESS”

– CONTINUED –

▽ **Maximum load rating**

The load rating at the maximum permissible weight load for this tire. For example, “MAX. LOAD 580 kg (1279 LBS) @ 300 kPa (44 PSI) MAX. PRESS.”

⚠ WARNING

Maximum load rating applies only to the tire, not to the vehicle. Putting a load rated tire on any vehicle does not mean the vehicle can be loaded up to the tire’s rated load.

▽ **Construction type**

Applicable construction of this tire.

For example, “TUBELESS STEEL BELTED RADIAL”

▽ **Construction**

The generic name of each cord material used in the plies (both sidewall and tread area) of this tire.

For example, “PLIES: TREAD 2 STEEL + 2 POLYESTER SIDEWALL 2 POLYESTER”

▽ **Uniform Tire Quality Grading (UTQG)**

For details, refer to “Uniform tire quality grading standards” ☞13-15.

■ Recommended tire inflation pressure

▼ Recommended cold tire inflation pressure

For recommended cold tire inflation pressure for your vehicle’s tires, refer to “Tires” ☞12-8.

▼ Vehicle placard

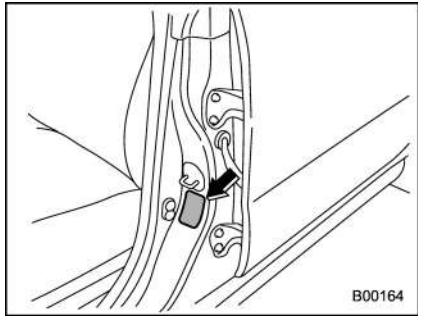

The vehicle placard is attached to the driver’s side door pillar.

Example:

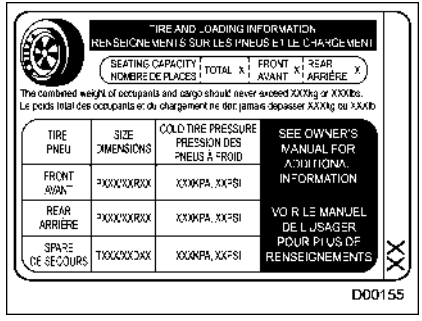

The vehicle placard shows original tire size, recommended cold tire inflation pressure on each tire at maximum loaded vehicle weight, seating capacity and loading information.

▼ Adverse safety consequences of under-inflation

Driving at high speeds with excessively low tire pressures can cause the tires to flex severely and to rapidly become hot. A sharp in-

crease in temperature could cause tread separation, and failure of the tire(s). Possible resulting loss of vehicle control could lead to an accident.

▼ **Measuring and adjusting air pressure to achieve proper inflation**

Check and, if necessary, adjust the pressure of each tire (including the spare) at least once a month and before any long journey. Check the tire pressures when the tires are cold. Use a pressure gauge to adjust the tire pressures to the specific values. Driving even a short distance warms up the tires and increases the tire pressures. Also, the tire pressures are affected by the outside temperature. It is best to check tire pressure outdoors before driving the vehicle. When a tire becomes warm, the air inside it expands, causing the tire pressure to increase. Be careful not to mistakenly release air from a warm tire to reduce its pressure.

■ Glossary of tire terminology

- **Accessory weight**

The combined weight (in excess of those standard items which may be replaced) of automatic transmission, power steering, power brakes, power windows, power seats, radio, and heater, to the extent that these items are available as factory-installed equipment (whether installed or not).

- **Bead**

The part of the tire that is made of steel wires, wrapped or reinforced by ply cords and that is shaped to fit the rim.

- **Bead separation**

A breakdown of the bond between components in the bead.

- **Bias ply tire**

A pneumatic tire in which the ply cords that extend to the beads are laid at alternate angles substantially less than 90 degrees to the centerline of the tread.

- **Carcass**

The tire structure, except tread and sidewall rubber which, when inflated, bears the load.

- **Chunking**

The breaking away of pieces of the tread or sidewall.

- **Cold tire pressure**

The pressure in a tire that has been driven less than 1 mile or has been standing for three hours or more.

- **Cord**

The strands forming the plies in the tire.

- **Cord separation**

The parting of cords from adjacent rubber compounds.

- **Cracking**

Any parting within the tread, sidewall, or inner liner of the tire extending to cord material.

- **Curb weight**

The weight of a motor vehicle with standard equipment including the maximum capacity of fuel, oil and coolant, and if so equipped, air conditioning and additional weight optional engine.

– CONTINUED –

- **Extra load tire**

A tire designed to operate at higher loads and higher inflation pressure than the corresponding standard tire.

- **Groove**

The space between two adjacent tread ribs.

- **Innerliner**

The layer(s) forming the inside surface of a tubeless tire that contains the inflating medium within the tire.

- **Innerliner separation**

The parting of the innerliner from cord material in the carcass.

- **Intended outboard sidewall**

(1) The sidewall that contains a whitewall, bears white lettering or bears manufacturer, brand, and/or model name molding that is higher or deeper than the same molding on the other sidewall of the tire, or

(2) The outward facing sidewall of an asymmetrical tire that has a particular side that must always face outward when mounting on a vehicle.

- **Light truck (LT) tire**

A tire designated by its manufacturer as primarily intended for use on lightweight trucks or multipurpose passenger vehicles.

- **Load rating**

The maximum load that a tire is rated to carry for a given inflation pressure.

- **Maximum inflation pressure**

The maximum cold inflation pressure to which a tire may be inflated.

- **Maximum load rating**

The load rating for a tire at the maximum permissible inflation pressure for that tire.

- **Maximum loaded vehicle weight**

The sum of:

(a) Curb weight
(b) Accessory weight
(c) Vehicle capacity weight
(d) Production options weight

- **Maximum permissible inflation pressure**

The maximum cold inflation pressure to which a tire may be inflated.

- **Measuring rim**

The rim on which a tire is fitted for physical dimension requirements.

- **Normal occupant weight**

150 lbs (68 kg) times the number of occupants specified in the second column of Table 1 that is appended to the end of this section.

- **Occupant distribution**

Distribution of occupants in a vehicle as specified in the third column of Table 1 that is appended to the end of this section.

- **Open splice**

Any parting at any junction of tread, sidewall, or innerliner that extends to cord material.

- **Outer diameter**

The overall diameter of an inflated new tire.

- **Overall width**

The linear distance between the exteriors of the sidewalls of an inflated tire, including elevations due to labeling, decorations, or protective bands or ribs.

- **Passenger car tire**

A tire intended for use on passenger cars, multipurpose passenger vehicles, and trucks, that have a gross vehicle weight rating (GVWR) of 10,000 lbs (4,535 kg) or less.

- **Ply**

A layer of rubber-coated parallel cords.

- **Ply separation**

A parting of rubber compound between adjacent plies.

- **Pneumatic tire**

A mechanical device made of rubber, chemicals, fabric and steel or other materials, that, when mounted on an automotive wheel, provides the traction and contains the gas or fluid that sustains the load.

- **Production options weight**

The combined weight of those installed regular production options weighing over 5.1 lbs (2.3 kg) in excess of those standard items which they replace, not previously considered in curb weight or accessory weight, including heavy duty brakes, ride levelers, roof rack, heavy duty battery, and special trim.

- **Radial ply tire**

A pneumatic tire in which the ply cords that extend to the beads are laid at substantially 90 degrees to the centerline of the tread.

- **Recommended inflation pressure**

The cold inflation pressure recommended by a vehicle manufacturer.

- **Reinforced tire**

A tire designed to operate at higher loads and at higher inflation pressures than the corresponding standard tire.

- **Rim**

A metal support for a tire or a tire and tube assembly upon which the tire beads are seated.

- **Rim diameter**

Nominal diameter of the bead seat.

- **Rim size designation**

Rim diameter and width.

- **Rim type designation**

The industry of manufacturer's designation for a rim by style or code.

- **Rim width**

Nominal distance between rim flanges.

- **Section width**

The linear distance between the exteriors of the sidewalls of an inflated tire, excluding elevations due to labeling, decoration, or protective bands.

- **Sidewall**

That portion of a tire between the tread and bead.

- **Sidewall separation**

The parting of the rubber compound from the cord material in the sidewall.

- **Test rim**

The rim on which a tire is fitted for testing, and it may be any rim listed as appropriate for use with that tire.

- **Tread**

That portion of a tire that comes into contact with the road.

– CONTINUED –

- **Tread rib**

A tread section running circumferentially around a tire.

- **Tread separation**

Pulling away of the tread from the tire carcass.

- **Treadwear indicators (TWI)**

The projections within the principal grooves designed to give a visual indication of the degrees of wear of the tread.

- **Vehicle capacity weight**

The rated cargo and luggage load plus 150 lbs (68 kg) times the vehicle's designated seating capacity.

- **Vehicle maximum load on the tire**

Load on an individual tire that is determined by distributing to each axle its share of the maximum loaded vehicle weight and dividing by two.

- **Vehicle normal load on the tire**

Load on an individual tire that is determined by distributing to each axle its share of the curb weight, accessory weight, and normal occupant weight (distributed in accordance with Table 1 that is appended to the end of this section) and dividing by 2.

- **Wheel-holding fixture**

The fixture used to hold the wheel and tire assembly securely during testing.

Table 1 — Occupant loading and distribution for vehicle normal load for various designated seating capacities

Designated seating capacity, number of occupants	Vehicle normal load, number of occupants	Occupant distribution in a normally loaded vehicle
2 through 4	2	2 in front.
5 through 10	3	2 in front, 1 in second seat.
11 through 15	5	2 in front, 1 in second seat, 1 in third seat, 1 in fourth seat.
16 through 22	7	2 in front, 2 in second seat, 2 in third seat, 1 in fourth seat.

– CONTINUED –

■ Tire care – maintenance and safety practices

- Check on a daily basis that the tires are free from serious damage, nails, and stones. At the same time, check the tires for abnormal wear.
- Inspect the tire tread regularly and replace the tires before their tread wear indicators become visible. When a tire's tread wear indicator becomes visible, the tire is worn beyond the acceptable limit and must be replaced immediately. With a tire in this condition, driving at even low speeds in wet weather can cause the vehicle to hydroplane. Possible resulting loss of vehicle control can lead to an accident.
- To maximize the life of each tire and ensure that the tires wear uniformly, it is best to rotate the tires every 7,500 miles (12,000 km). For information about the tire rotation order, refer to "Tire rotation" ☞11-26. Replace any damaged or unevenly worn tires at the time of rotation. After tire rotation, adjust the tire pressures and make sure the wheel nuts are correctly tightened. For information about the tightening torque and tightening sequence for the wheel nuts, refer to "Flat tires" ☞9-5.

■ Vehicle load limit – how to determine

The load capacity of your vehicle is determined by weight, not by available cargo space. The load limit of your vehicle is shown on the vehicle placard attached to the driver's side door pillar. Locate the statement "The combined weight of occupants and cargo should never exceed XXX kg or XXX lbs" on your vehicle's placard.

The vehicle placard also shows seating capacity of your vehicle.

The total load capacity includes the total weight of driver and all passengers and their belongings, any cargo, any optional equipment such as a trailer hitch, roof rack or bike carrier, etc., and the tongue load of a trailer. Therefore cargo capacity can be calculated by the following method.

Cargo capacity = Load limit − (total weight of occupants + total weight of optional equipment + tongue load of a trailer (if applicable))

For information about vehicle loading, refer to "Loading your vehicle" ☞8-12.

For information about towing capacity and weight limits, refer to "Trailer towing" ☞8-17.

▼ **Calculating total and load capacities varying seating configurations**

Calculate the available load capacity as shown in the following examples:

Example 1A

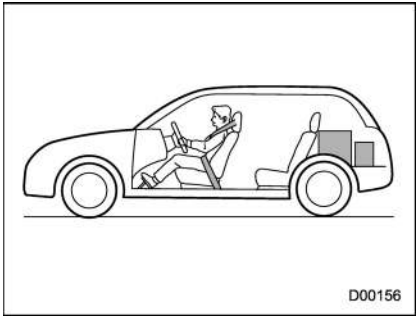

Vehicle capacity weight of the vehicle is 900 lbs (408 kg), which is indicated on the vehicle placard with the statement “The combined weight of occupants and cargo should never exceed 900 lbs or 408 kg”.

For example, if the vehicle has one occupant weighing 154 lbs (70 kg) plus cargo weighing 662 lbs (300 kg).

1. Calculate the total weight.

Total weight

= 154 lbs (70 kg) (Occupant) + 662 lbs (300 kg) (Cargo)

= **816 lbs (370 kg)**

2. Calculate the available load capacity by subtracting the total weight from the vehicle capacity weight of 900 lbs (408 kg).

Available Load Capacity

= 900 lbs (408 kg) (Vehicle capacity weight) − 816 lbs (370 kg) (Total weight)

= **84 lbs (38 kg)**

3. The result of step 2 shows that a further 84 lbs (38 kg) of cargo can be carried.

Example 1B

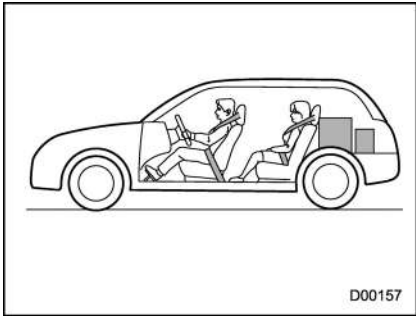

For example, if a person weighing 176 lbs (80 kg) now enters the same vehicle (bringing the number of occupants to two), the calculations are as follows.

1. Calculate the total weight.

Total weight

= 154 lbs (70 kg) + 176 lbs (80 kg) (Occupant)

+ 662 lbs (300 kg) (Cargo)

= **992 lbs (450 kg)**

– CONTINUED –

2. Calculate the available load capacity.

Available Load Capacity

= 900 lbs (408 kg) – 992 lbs (450 kg)
(Vehicle capacity weight) (Total weight)

= –92 lbs (–42 kg)

3. The total weight now exceeds the capacity weight by 92 lbs (42 kg), so the cargo weight must be reduced by 92 lbs (42 kg) or more.

Example 2A

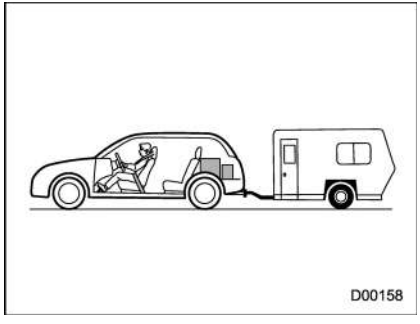

Vehicle capacity weight of the vehicle is 900 lbs (408 kg), which is indicated on the vehicle placard with the statement “The combined weight of occupants and cargo should never exceed 408 kg or 900 lbs”.

For example, the vehicle has one occupant weighing 165 lbs (75 kg) plus cargo weighing 375 lbs (170 kg). In addition, the vehicle is fitted with a trailer hitch weighing 22 lbs (10 kg), to which is attached a trailer weighing 1,764 lbs (800 kg). 10% of the trailer weight is applied to the trailer tongue (i.e. Tongue load = 176 lbs (80 kg)).

1. Calculate the total weight.

Total weight

= 165 lbs (75 kg) + 375 lbs (170 kg)
(Occupant) (Cargo)

+ 22 lbs (10 kg) + 176 lbs (80 kg)
(Trailer hitch) (Tongue load)

= 738 lbs (335 kg)

2. Calculate the available load capacity.

Available Load Capacity

= 900 lbs (408 kg) – 738 lbs (335 kg)
(Vehicle capacity weight) (Total weight)

= 162 lbs (73 kg)

3. The result of step 2 shows that a further 162 lbs (73 kg) of cargo can be carried.

Example 2B

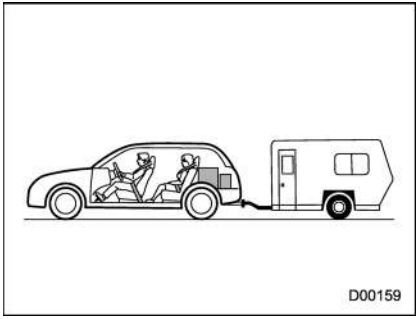

For example, if a person weighing 143 lbs (65 kg) and a child weighing 40 lbs (18 kg) now enter the same vehicle (bringing the number of occupants to three), and a child restraint system weighing 11 lbs (5 kg) is installed in the vehicle for the child to use, the calculations are as follows.

1. Calculate the total weight.

Total weight

= 165 lbs (75 kg) + 143 lbs (65 kg) (Occupant)

+ 40 lbs (18 kg) (Occupant)

+ 11 lbs (5 kg) (Child restraint) + 375 lbs (170 kg) (Cargo)

+ 22 lbs (10 kg) (Trailer hitch) + 176 lbs (80 kg) (Tongue load)

= **932 lbs (423 kg)**

2. Calculate the available load capacity.

Available Load Capacity

= 900 lbs (408 kg) (Vehicle capacity weight) – 932 lbs (423 kg) (Total weight)

= **–32 lbs (–15 kg)**

3. The total weight now exceeds the capacity weight by 32 lbs (15 kg), so the cargo weight must be reduced by 32 lbs (15 kg) or more.

■ Determining compatibility of tire and vehicle load capacities

The sum of four tires' maximum load ratings must exceed the maximum loaded vehicle weight ("GVWR"). In addition, sum of the maximum load ratings of two front tires and of two rear tires must exceed each axle's maximum loaded capacity ("GAWR"). Original equipment tires are designed to fulfill those conditions.

The maximum loaded vehicle weight is referred to Gross Vehicle Weight Rating (GVWR). And each axle's maximum loaded capacity is referred to Gross Axle Weight Rating (GAWR). The GVWR and each axle's GAWR are shown on the vehicle certification label located at the bottom of driver's side door pillar.

The GVWR and front and rear GAWRs are determined by not only the maximum load rating of tires but also loaded capacities of the vehi-

– CONTINUED –

cle's suspension, axles and other parts of the body.

Therefore, this means that the vehicle cannot necessarily be loaded up to the tire's maximum load rating on the tire sidewall.

■ Adverse safety consequences of overloading on handling and stopping and on tires

Overloading could affect vehicle handling, stopping distance, and vehicle and tire performance in the following ways. This could lead to an accident and possibly result in severe personal injury.

- Vehicle stability will deteriorate.
- Heavy and/or high-mounted loads could increase the risk of rollover.
- Stopping distance will increase.
- Brakes could overheat and fail.
- Suspension, bearings, axles and other body parts could break or experience accelerated wear that will shorten vehicle life.
- Tires could fail.
- Tread separation could occur.
- Tire could separate from its rim.

■ Steps for Determining Correct Load Limit

1. Locate the statement "The combined weight of occupants and cargo should never exceed XXX kg or XXX lbs." on your vehicle's placard.
2. Determine the combined weight of the driver and passengers that will be riding in your vehicle.
3. Subtract the combined weight of the driver and passengers from XXX kg or XXX lbs.
4. The resulting figure equals the available amount of cargo and luggage load capacity. For example, if the "XXX" amount equals 1400 lbs. and there will be five 150 lb passengers in your vehicle, the amount of available cargo and luggage load capacity is 650 lbs. (1400 − 750 (5 × 150) = 650 lbs.)
5. Determine the combined weight of luggage and cargo being loaded on the vehicle. That weight may not safely exceed the available cargo and luggage load capacity calculated in Step 4.
6. If your vehicle will be towing a trailer, load from your trailer will be transferred to your vehicle. Consult this manual to determine how this reduces the available cargo and luggage load capacity of your vehicle.

Uniform tire quality grading standards

This information indicates the relative performance of passenger car tires in the area of treadwear, traction, and temperature resistance. This is to aid the consumer in making an informed choice in the purchase of tires.

Quality grades can be found where applicable on the tire sidewall between tread shoulder and maximum section width. For example:

Treadwear 200 Traction AA Temperature A

The quality grades apply to new pneumatic tires for use on passenger cars. However, they do not apply to deep tread, winter type snow tires, space-saver or temporary use spare tires, tires with nominal rim diameters of 12 inches or less, or to some limited production tires.

All passenger car tires must conform to Federal Safety Requirements in addition to these grades.

■ Treadwear

The treadwear grade is a comparative rating based on the wear rate of the tire when tested under controlled conditions on a specified government test course.

For example, a tire graded 150 would wear one and one-half (1-1/2) times as well on the government course as a tire graded 100. The relative performance of tires depends upon the actual conditions of their use, however, and may depart significantly from the norm due to variations in driving habits, service practices and differences in road characteristics and climate.

■ Traction AA, A, B, C

The traction grades, from highest to lowest, are AA, A, B and C. Those grades represent the tire's ability to stop on wet pavement as measured under controlled conditions on specified government test surfaces of asphalt and concrete. A tire marked C may have poor traction performance.

⚠ WARNING

The traction grade assigned to this tire is based on straight-ahead braking traction tests, and does not include acceleration, cornering, hydroplaning, or peak traction characteristics.

■ Temperature A, B, C

The temperature grades are A (the highest), B, and C, representing the tire's resistance to the generation of heat and its ability to dissipate heat when tested under controlled conditions on a specified indoor laboratory test wheel. Sustained high temperature can cause the material of the tire to degenerate and reduce tire life, and excessive temperature can lead to sudden tire failure. The

– CONTINUED –

grade C corresponds to a level of performance which all passenger car tires must meet under the Federal Motor Vehicle Safety Standards No. 109. Grades B and A represent higher levels of performance on the laboratory test wheel than the minimum required by law.

WARNING

The temperature grade for this tire is established for a tire that is properly inflated and not overloaded. Excessive speed, underinflation, or excessive loading, either separately or in combination, can cause heat buildup and possible tire failure.

Reporting safety defects (U.S.A.)

If you believe that your vehicle has a defect which could cause a crash or could cause injury or death, you should immediately inform the National Highway Traffic Safety Administration (NHTSA) in addition to notifying Subaru of America, Inc.

If NHTSA receives similar complaints, it may open an investigation, and if it finds that a safety defect exists in a group of vehicles, it may order a recall and remedy campaign. However, NHTSA cannot become involved in individual problems between you, your dealer, or Subaru of America, Inc. To contact NHTSA, you may call the Vehicle Safety Hotline toll-free at 1-888-327-4236 (TTY: 1-800-424-9153); go to http://www.safercar.gov; or write to: Administrator, NHTSA, 1200 New Jersey Avenue, SE, West Building, Washington, DC 20590. You can also obtain other information about motor vehicle safety from http://www.safercar.gov.

Supplement

■ Declaration of conformity with FCC rules

▼ Electrostatic sensor for occupant detection system

DECLARATION OF CONFORMITY WITH FCC RULES

According to 47CFR, Part 18

We, DENSO INTERNATIONAL AMERICA, INC.

Located at : 24777 Denso Drive, Southfield, Michigan

Declare that the product:

Trade Name: DENSO

Kind of equipment: Electrostatic sensor

Model Name: DECS001

Complies with 47CFR Part 18 of the FCC rules.

Party Responsible: KATSUHIKO AKAMATSU

FC

D00208

A
Abbreviation 3
ABS (Anti-lock Brake System) 7-32
Warning light 3-21
Access key 2-9
Warning indicator 3-25
Accessories 11-36
Accessory power outlet 6-8
Air cleaner element 11-12
Air conditioner
Automatic climate control 4-7
Manual climate control 4-8
Air filtration system 4-12
Air flow mode 4-8
Alarm system 2-26
All-Wheel Drive warning light 3-23
Aluminum wheel 11-28
Cleaning 10-3
Antenna 5-2
Anti-lock Brake System (ABS) 7-32
Arming the system 2-27
Armrest 1-8
Ashtray 6-10
AT OIL TEMP warning light 3-19
Audio
aha™ by HARMAN 5-43
AM/FM radio 5-28
AUX 5-60
Base display audio set 5-4
Basic operation 5-18
Bluetooth audio 5-57
CD 5-52
iPod 5-55
Pandora® 5-49
SiriusXM Satellite Radio 5-37
STARLINK™ 7.0 Multimedia Plus audio set 5-6
Steering switches for audio 5-62
SUBARU STARLINK 5-26
Unit setting 5-19
USB memory 5-54
Auto on/off headlights 3-89
Automatic headlight beam leveler 3-93
Warning light 3-31
Automatic Locking Retractor/Emergency Locking Retractor (ALR/ELR) 1-12

B
Battery
Drainage prevention function 2-7
Jump starting 9-10
Replacement (access key) 11-42
Replacement (transmitter) 11-43
Vehicle battery 11-33
Bluetooth®
Audio 5-57
Hands-free phone system 5-70
Settings 5-65
Troubleshooting 5-88
Bluetooth® settings 5-65
Booster seat 1-31
Bottle holder 6-7

Brake
Assist 7-31
Booster 7-31, 11-17
Disc 12-8
Fluid 11-15, 12-7
Pad and lining 11-20
Parking 7-39, 11-20
Pedal 11-18
System 7-31
Brake system 7-31
Warning light 3-21
Braking 7-30
Tips 7-30
Breaking-in of new brake pads and linings 11-20
BSD/RCTA 7-48
Approach indicator light/warning buzzer 7-52
OFF indicator 3-32
OFF switch 7-55
Warning indicator 3-32, 7-54
Warning volume 3-42, 7-53
Bulb
Chart 12-13
Replacement 11-36

C
Cargo area
Cover 6-12
Light 6-2, 11-41
Tie-down hooks 6-14
Catalytic converter 8-3
Center console 6-6
Changing
Coolant 11-12
Flat tire 9-5
Oil and oil filter 11-9
Charge warning light 3-18
CHECK ENGINE warning light/Malfunction indicator light 3-16
Checking
Brake pedal free play 11-18
Brake pedal reserve distance 11-18
Clutch function 11-18
Clutch pedal free play 11-19
Coolant level 11-11
Fluid level (brake fluid) 11-15
Fluid level (clutch fluid) 11-16
Fluid level (washer fluid) 11-28
Oil level (engine oil) 11-8
Child restraint systems 1-24
Installation of a booster seat 1-31
Installation with ALR/ELR seatbelt 1-27
Lower and tether anchorages 1-33
Top tether anchorages 1-36
Child safety 5
Locks 2-33
Chime
Key 3-5
Light 3-88
Seatbelt 3-14
Cigarette lighter 6-9
Cleaning
Aluminum wheels 10-3

Interior 10-5
Ventilation grille 4-11
Climate control system 4-3
Automatic 4-7
Manual 4-8
Clock 3-37, 3-52
Clutch
Fluid 11-16
Pedal 11-18
Coat hook 6-11
Continuously variable transmission (CVT) 7-23
Fluid 11-15, 12-7
Oil temperature warning light (AT OIL TEMP) 3-19
Coolant 11-11, 12-7
Temperature high warning light 3-17
Temperature low indicator light 3-17
Cooling system 11-10
Corrosion protection 10-4
Cruise control 7-44
Indicator light 3-31
Set indicator light 3-31
Cup holder 6-7

D

Daytime running light system 3-91
Defogger 3-100
Defrosting 4-11
Deicer 3-100
Differential gear oil
Front 11-15, 12-6
Rear 11-15, 12-6
Dimensions 12-2
Disarming the alarm system 2-30
Disc brake pad wear warning indicators 7-31
Dome light 6-2, 11-41
Door
Locks 2-5
Open warning light 3-23
Drive belts 11-14
Driving
AWD vehicles 8-4
Car phone/cell phone 7
Drinking 6
Drugs 7
Foreign countries 8-4
Off road 8-6
Pets 8
Snowy and icy roads 8-9
Tips 7-23, 7-29, 8-2, 8-4
Tired or sleepy 7
Winter 8-8

E

ECO gauge 3-12, 3-48
Electrical system 12-7
Electronic Brake Force Distribution (EBD) system 7-33
Warning 3-22
Emergency Locking Retractor (ELR) 1-12
Engine
Compartment overview 11-7
Coolant 11-11, 12-7
Exhaust gas (carbon monoxide) 6, 8-2

Hood 11-5
Low oil level warning light 3-18
Oil 11-8, 12-4
Overheating 9-12
Starting & stopping 7-9, 7-11
Event data recorder 9
Exterior care 10-2

F
Flat tires 9-5
Floor mat 6-11
Fluid level
Brake 11-15
Clutch 11-16
Continuously variable transmission 11-15
Fog light
Bulb 11-38, 12-13
Indicator light 3-31
Switch 3-93
Front
Differential gear oil 11-15, 12-6
Seatbelt pretensioners 1-20
Turn signal light 11-38
Front seats 1-2
Forward and backward adjustment 1-3
Head restraint adjustment 1-5
Reclining 1-4
Seat height adjustment 1-4
Fuel 7-3
Consumption indicator 3-33
Consumption screen 3-48
Economy hints 8-2
Filler lid and cap 7-4
Gauge 3-12
Requirements 7-3, 12-3
Fuses 11-34
Fuses and circuits 12-9

G
GAWR (Gross Axle Weight Rating) 8-13
Glove box 6-6
GVWR (Gross Vehicle Weight Rating) 8-13

H
Hands-free phone system 5-70
Hazard warning flasher 3-8, 9-2
Head restraint adjustment
Front seat 1-5
Rear seat 1-8
Headlight
Beam leveler 3-93
Bulb replacing 11-36
Bulb wattage 12-13
Control switch 3-88
Flasher 3-91
Indicator light 3-32
Welcome lighting function 3-89
HID headlights 1, 11-36
High beam indicator light 3-31
High/low beam change (dimmer) 3-90
Hill start assist 7-41, 11-19
OFF indicator light 3-23

Warning light 3-22
Hook
Cargo tie-down 6-14
Coat 6-11
Shopping bag 6-12
Towing and tie-down 9-13
Horn 3-102
Hose and connections 11-11

I
Ignition switch 3-4
Light 3-6
Illumination brightness control 3-92
Immobilizer 2-3
Indicator light (security indicator light) 3-30
Indicator light
BSD/RCTA OFF 3-32
BSD/RCTA warning 3-32
Coolant temperature low 3-17
Cruise control 3-31
Cruise control set 3-31
Front fog light 3-31
Headlight 3-32
High beam 3-31
Hill start assist OFF 3-23
Immobilizer 3-30
Security 3-30
Select lever/Gear position 3-30
Steering responsive fog lights OFF 3-32
Turn signal 3-31
Vehicle Dynamics Control OFF 3-25
Vehicle Dynamics Control operation 3-24
Information display 3-32
Inside mirror 3-99
Interior lights 6-2

J
Jack-up point 9-5
Jump starting 9-10

K
Key 2-3
Number plate 2-3
Reminder chime 3-5
Replacement 2-4
Keyless access entry function 2-13
Keyless access with push-button start system 2-9
Disabling keyless access functions 2-17
Locking and unlocking doors 2-13
Opening rear gate 2-15
Warning chimes and warning indicator 3-25
When access key does not operate properly 9-17
Keyless entry system 2-22

L
Leather seat materials 10-5
License plate light 11-40
Light
Backup 11-38
Cargo area 6-2, 11-41
Control switch 3-88
Daytime running 3-91

Dome 6-2, 11-41
Front fog 3-93, 11-38
Front side marker 3-89, 12-13
Ignition switch 3-6
License plate 11-40
Map 6-3, 11-40
Parking 11-38
Rear combination 11-38
Rear side marker light 11-38
Stop 11-38
Tail 11-38
Turn signal 3-92, 11-38
Loading your vehicle 8-12
Low fuel warning light 3-22
Low tire pressure warning light 3-19
Lower and tether anchorage 1-33

M

Maintenance
Precautions 11-3
Schedule 11-3
Seatbelt 1-20
Tools 9-3
Malfunction indicator light (check engine warning light) ... 3-16
Manual
Transmission 7-22
Transmission oil 11-14
Manual mode 7-26
Map light 6-3, 11-40
Maximum load limits 8-18
Meters and gauges 3-9
Mirror defogger 3-100
Mirrors 3-99
Moonroof 2-39
Multi function display 3-42
Multi information display 3-38

N

New vehicle break-in driving 8-2

O

Odometer 3-10
Off road driving 8-6
Oil filter 11-9
Oil level
Engine 11-8
Front differential gear 11-15
Rear differential gear 11-15
Warning light 3-18
Oil pressure warning light 3-18
Outside
Mirror defogger 3-100
Mirrors 3-99
Temperature indicator 3-33, 3-47
Overheating engine 9-12

P

Parking
Brake 7-39
Brake stroke 11-20
Light 11-38
Tips 7-39

Periodic inspections 8-4
Petrol fuel 7-3
PIN Code Access 2-20
Power
Door locking switch 2-8
Outlets 6-8
Outside mirrors 3-100
Steering 7-29
Steering warning light 3-23
Windows 2-34
Precautions against vehicle modification 1-24, 1-66
Preparing to drive 7-8
Push-button
Ignition switch 3-6
Starting and stopping engine 7-11

R
Rear
Combination lights 11-38
Differential gear oil 11-15, 12-6
Gate 2-37, 9-18
Turn signal light 11-38
Rear seat 1-7
Armrest 1-8
Folding down 1-10
Head restraint adjustment 1-8
Rear view camera 6-15
How to adjust the rear view image 5-25
Rear window
Defogger 3-100
Wiper and washer switch 3-98
Wiper blades 11-31
Recommended
Brake fluid 12-7
Continuously variable transmission fluid 12-7
Engine oil 12-4
Front differential gear oil 12-6
Rear differential gear oil 12-6
Spark plugs 12-7
Refueling 7-5
Remote engine start system 7-14
Remote keyless entry system 2-22
Replacement
Access key battery 11-42
Air cleaner element 11-13
Brake pad and lining 11-19
Lost transmitters (remote keyless entry system) 2-25
Remote keyless entry transmitter battery 11-43
Wiper blades 11-29
Replacing bulbs 11-36, 12-13
Backup light 11-38
Cargo area light 11-41
Dome light 11-41
Front fog light 11-38
Front turn signal light 11-38
Headlight 11-36, 11-37
License plate light 11-40
Map light 11-40
Parking light 11-38
Rear combination light 11-38
Rear side marker light 11-38
Rear turn signal light 11-38

Stop light 11-38
Tail light 11-38
Rocking the vehicle 8-11
Roof rails 8-14

S

Safety
Precautions when driving 4
Symbol 3
Warnings 2
Seat
Fabric 10-5
Front 1-2
Heater 1-6
Rear 1-7
Seatbelt 4, 1-11
Fastening 1-13
Maintenance 1-20
Pretensioners 1-20
Safety tips 1-11
Warning light and chime 3-14
Security
Alarm system 2-26
Immobilizer 2-3
Indicator light 3-30
Shock sensors 2-33
Select lever
Position indicator 3-30
Shift lock function 7-28
Shock sensors 2-33
Shopping bag hook 6-12
Snow tires 8-10, 11-21
Snowy and icy roads 8-9
Sounding a panic alarm 2-24
Spark plugs 11-14, 12-7
Specifications 12-2
Speedometer 3-10
SRS
Curtain airbag 1-56
Frontal airbag 1-46
Side airbag 1-56
SRS airbag (Supplemental Restraint System airbag)... 4, 1-37
SRS airbag system
Monitors 1-63
Servicing 1-65
Warning light 3-15
Starting & stopping engine 7-9, 7-11
State emission testing (U.S. only) 7-7
Steering responsive fog lights system 3-94
OFF indicator 3-32
Steering switches for audio 5-62
Steering wheel
Power 7-29
Tilt/telescopic 3-102
Stop light 11-38
Storage compartment 6-5
Sun shade 2-40
Sun visors 6-4
Supplemental Restraint System airbag (SRS) 1-37
Synthetic leather upholstery 10-6

T
Tachometer 3-11
Temperature warning light
AT OIL TEMP 3-19
Coolant 3-17
Temporary spare tire 9-2
Tether (child restraint system) 1-33, 1-36
Tie-down hooks/holes 9-13
Tire 11-21, 12-8
Chains 8-11
Inspection 11-23
Pressures and wear 11-23
Replacement 11-26
Rotation 11-26
Size and pressure 12-8
Types 11-21
Tire pressure monitoring system (TPMS) 7-37, 9-8, 11-21
Warning light 3-19
Tires and wheels 11-21
Tools 9-3
Top tether anchorages 1-33, 1-36
Towing 9-13
All wheels on the ground 9-16
Flat-bed truck 9-15
Hooks 9-13
Weight 8-18
Trailer
Connecting 8-16
Hitch 8-15, 8-21
Towing tips 8-23
Trailer towing 8-17
Trip meter 3-10
Turn signal
Indicator lights 3-31
Lever 3-92

V
Valet mode 2-31
Vanity mirror 6-5
Vehicle
Capacity weight 8-13
Identification 12-16
Symbols 4
Vehicle Dynamics Control
OFF indicator light 3-25
OFF switch 7-36
Operation indicator light 3-24
System 7-34
Warning light 3-24
Ventilator 4-2
Voice command operation 5-80

W
Warning and indicator lights 3-13
Warning chimes
Keyless access with push-button start system 3-25
Seatbelt 3-14
Warning light
ABS 3-21
Access key 3-25
All-Wheel Drive 3-23
AT OIL TEMP 3-19

Automatic headlight beam leveler 3-31
Brake system 3-21
Charge 3-18
CHECK ENGINE 3-16
Coolant temperature high 3-17
Door open 3-23
Engine low oil level 3-18
Hill start assist 3-22
Keyless access with push-button start system 3-25
Low fuel 3-22
Low tire pressure 3-19
Oil pressure 3-18
Power steering 3-23
Seatbelt 3-14
SRS airbag system 3-15
Vehicle Dynamics Control 3-24
Windshield washer fluid 3-19
Warranties 1
Warranties and maintenance 8-17
Washing 10-2
Waxing and polishing 10-3
Wear indicators 11-25
Welcome lighting function 3-89
Wheel
Aluminum 11-28
Balance 11-25
Nut tightening torque 12-8
Replacement 11-27
Windows 2-34
Windshield
Washer fluid 11-28
Wiper and washer switches 3-96
Wiper blades 11-30
Wiper deicer 3-100
Winter
Driving 8-8
Tires 8-10, 11-21
Wiper and washer 3-95
Wiper deicer 3-100

GAS STATION REFERENCE

■ Fuel:

Use only **unleaded gasoline** with an octane rating of **87 AKI (90 RON) or higher**.

■ Fuel octane rating:

▼ RON

This octane rating is the Research Octane Number.

▼ AKI

This octane rating is the average of the Research Octane and Motor Octane numbers and is commonly referred to as the Anti Knock Index (AKI).

■ Fuel capacity:

15.9 US gal (60 liters, 13.2 Imp gal)

■ Engine oil:

Use only the following oils.

- API classification SN with the words “RESOURCE CONSERVING”
- or ILSAC GF-5, which can be identified with the ILSAC certification mark (Starburst mark)

For the complete viscosity requirements, refer to “Engine oil” ☞12-4.

■ Engine oil capacity:

5.1 US qt (4.8 liters, 4.2 Imp qt)

The indicated oil quantity is only a guideline and is estimated based on a case when the engine oil is changed with an oil filter. After refilling the engine with oil, the oil level should be checked using the oil level gauge. For more details about maintenance and service, refer to “Engine oil” ☞11-8.

■ Cold tire pressure:

Refer to “Tires” ☞12-8.

A1290BE-A
Issued August 2016
Printed in USA 08/16
2017A

英　語

MSA5M1707A

FSC
MIX
Paper
FSC® C102270

SUBARU
Subaru of America, Inc., Subaru Plaza,
P.O. Box 6000, Cherry Hill, NJ 08034-6000

FUJI HEAVY INDUSTRIES LTD.
TOKYO, JAPAN

Vehicles shown on the cover of this booklet may not be available in all markets. Please see your Subaru dealer for a Product Brochure detailing all currently available models.